FOREWORD

This manual contains maintenance and repair procedures for the 1990 TOYOTA SUPRA.

Applicable model: MA70 series

The manual is divided into 24 sections and 4 appendixes with a thumb index for each section at the edge of the pages.

Please note that the publications below have also been prepared as relevant service manuals to the components and systems in this vehicle.

Manual Name	Pub. No.
• 1990 Toyota Supra Electrical Wiring Diagram Manual	EWD072U
• Toyota Supra Collision Damaged Body Repair Manual	BRM005E
• Toyota Supra Collision Damaged Body Repair Manual Supplement	BRM009E
• 1990 Model New Car Features	NCF059U

All information in this manual is based on the latest product information at the time of publication. However, specifications and procedures are subject to change without notice.

TOYOTA MOTOR CORPORATION

1990 TOYOTA SUPRA REPAIR MANUAL

INTRODUCTION IN
MAINTENANCE MA
ENGINE MECHANICAL EM
EXHAUST SYSTEM EX
TURBOCHARGER SYSTEM TC
EMISSION CONTROL SYSTEMS EC
EFI SYSTEM FI
COOLING SYSTEM CO
LUBRICATION SYSTEM LU
IGNITION SYSTEM IG
STARTING SYSTEM ST
CHARGING SYSTEM CH
CLUTCH CL
MANUAL TRANSMISSION MT
AUTOMATIC TRANSMISSION AT
PROPELLER SHAFT PR
FRONT AXLE AND SUSPENSION FA
REAR AXLE AND SUSPENSION RA
BRAKE SYSTEM BR
STEERING SR
SRS AIRBAG AB
BODY ELECTRICAL SYSTEM BE
BODY BO
AIR CONDITIONING SYSTEM AC
SERVICE SPECIFICATIONS A
STANDARD BOLT TORQUE SPECIFICATIONS B
SST AND SSM C
ELECTRICAL WIRING DIAGRAMS D

INTRODUCTION

	Page
HOW TO USE THIS MANUAL	IN-2
IDENTIFICATION INFORMATION	IN-4
GENERAL REPAIR INSTRUCTIONS	IN-4
PRECAUTIONS FOR VEHICLES EQUIPPED WITH SRS AIRBAG	IN-7
PRECAUTIONS FOR VEHICLES EQUIPPED WITH A CATALYTIC CONVERTER	IN-11
PRECAUTIONS FOR VEHICLES WITH AN AUDIO SYSTEM WITH BUILT-IN ANTI-THEFT SYSTEM	IN-11
VEHICLE LIFT AND SUPPORT LOCATIONS	IN-12
ABBREVIATIONS USED IN THIS MANUAL	IN-13

HOW TO USE THIS MANUAL

To assist you in finding your way through the manual, the Section Title and major heading are given at the top of every page.

An **INDEX** is provided on the first page of each section to guide you to the item to be repaired.

At the beginning of each section, **PRECAUTIONS** are given that pertain to *all* repair operations contained in that section. *Read these precautions before starting any repair task.*

TROUBLESHOOTING tables are included for each system to help you diagnose the problem and find the cause. The repair for each possible cause is referenced in the remedy column to quickly lead you to the solution.

REPAIR PROCEDURES

Most repair operations begin with an overview illustration. It identifies the components and shows how the parts fit together.

Example:

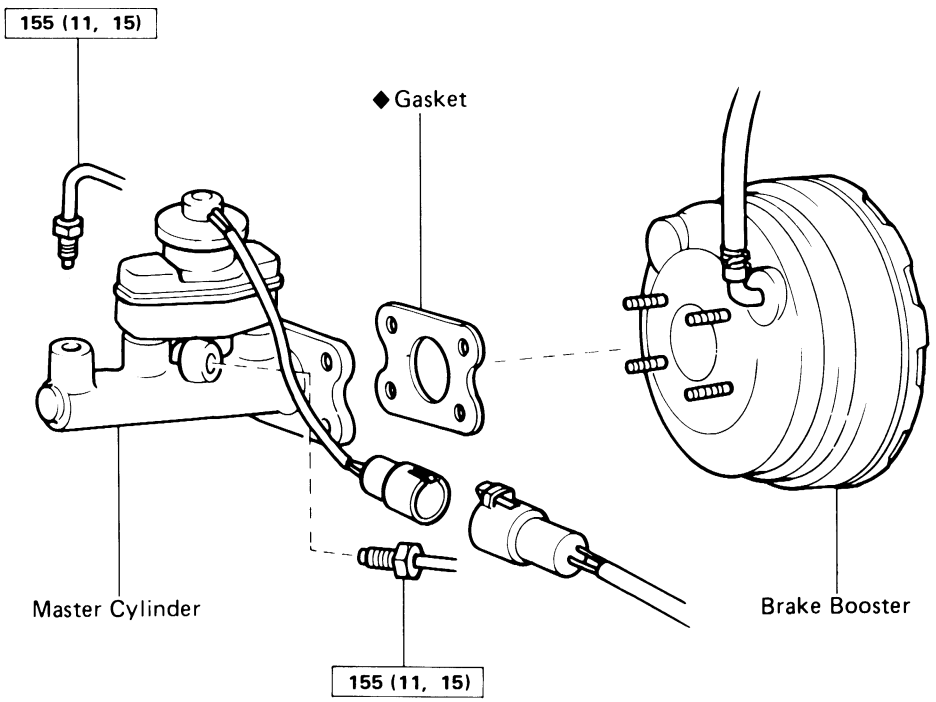

kg-cm (ft-lb, N·m) : Specified torque
◆ Non-reusable part

BR1219

The procedures are presented in a step-by-step format:

- The illustration shows *what* to do and *where* to do it.
- The task heading tells *what* to do.
- The detailed text tells *how* to perform the task and gives other information such as specifications and warnings.

Illustration: what to do and where

Example:

Task heading: what to do

21. CHECK PISTON STROKE OF OVERDRIVE BRAKE

(a) Place SST and a dial indicator onto the overdrive brake piston as shown in the figure.

SST 09350-30020 (09350-06120)

Set part No. *Component part No.*

Detailed text: how to do task

(b) Measure the stroke applying and releasing the compressed air (4 – 8 kg/cm^2, 57 – 114 psi or 392 – 785 kPa) as shown in the figure.

Piston stroke: 1.40 – 1.70 mm (0.0551 – 0.0669 in.)

Specification

This format provides the experienced technician with a FAST TRACK to the information needed. The upper case task heading can be read at a glance when necessary, and the text below it provides detailed information. Important specifications and warnings always stand out in bold type.

REFERENCES

References have been kept to a minimum. However, when they are required you are given the page to refer to.

SPECIFICATIONS

Specifications are presented in bold type throughout the text where needed. You never have to leave the procedure to look up your specifications. They are also found in Appendex A, for quick reference.

CAUTIONS, NOTICES, HINTS:

- CAUTIONS are presented in bold type, and indicate there is a possibility of injury to you or other people.
- NOTICES are also presented in bold type, and indicate the possibility of damage to the components being repaired.
- HINTS are separated from the text but do not appear in bold. They provide additional information to help you efficiently perform the repair.

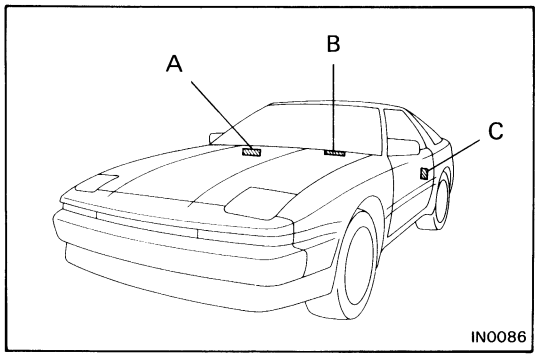

IDENTIFICATION INFORMATION

VEHICLE IDENTIFICATION NUMBER

The vehicle identification number is stamped on the cowl panel. This number has also been stamped on the vehicle identification number plate and certification regulation label.

A. Vehicle Identification Number
B. Vehicle Identification Number Plate
C. Certification Regulation Label

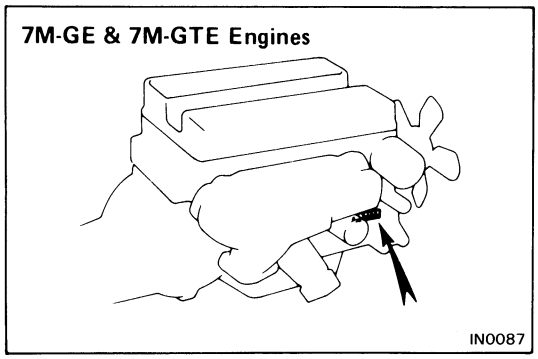

ENGINE SERIAL NUMBER

The engine serial number is stamped on the engine block as showh.

GENERAL REPAIR INSTRUCTIONS

1. Use fender seat and floor covers to keep the vehicle clean and prevent damage.
2. During disassembly, keep parts in the appropriate order to facilitate reassembly.
3. Observe the following:
   (a) **CAUTION: Work must be started after approx. 20 seconds or longer from the time the ignition switch is turned to the "LOCK" position and the negative (–) terminal cable is disconnected from the battery (See page AB-2).**
   (b) Before performing electrical work, disconnect the negative from the battery terminal.
   (c) If it is necessary to disconnect the battery for inspection or repair, always disconnect the cable from the negative (–) terminal which is grounded to the vehicle body.
   (d) To prevent damage to the battery terminal post, loosen the terminal nut and raise the cable straight up without twisting or prying it.
   (e) Clean the battery terminal posts and cable terminals with a shop rag. Do not scrape them with a file or other adrasive object.
   (f) Install the cable terminal to the battery post with the nut loose, and tighten the nut after installation. Do not use a hammer to tap the terminal onto the post.
   (g) Be sure the cover for the positive (+) terminal is properly in place.

4. Check hose and wiring connectors to make sure that they are secure and correct.
5. Non-reusable parts
   (a) Always replace cotter pins, gaskets, O-rings and oil seals etc. with new ones.
   (b) Non-reusable parts are indicated in the component illustrations by the " ◆ " symbol.

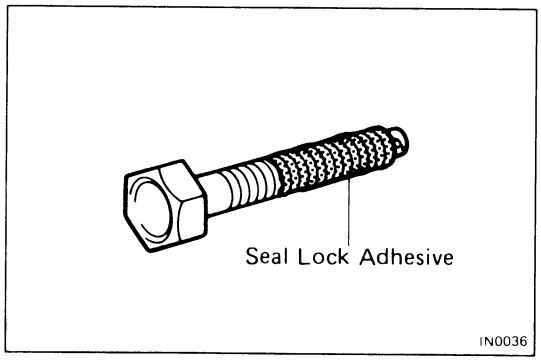

6. Precoated parts

   Precoated parts are bolts and nuts, etc. that are coated with a seal lock adhesive at the factory.
   (a) If a precoated part is retightened, loosened or caused to move in any way, it must be recoated with the specified adhesive.
   (b) Recoating of precoated parts
      (1) Clean off the old adhesive from the bolt, nut or threads.
      (2) Dry with compressed air.
      (3) Apply the specified seal lock adhesive to the bolt or nut threads.
   (c) Precoated parts are indicated in the component illustrations by the "★" symbol.
7. When necessary, use a sealer on gaskets to prevent leaks.
8. Carefully observe all specifications for bolt tightening torques. Always use a torque wrench.
9. Use of special service tools (SST) and special service materials (SSM) may be required, depending on the nature of the repair. Be sure to use SST and SSM where specified and follow the proper work procedure. A list of SST and SSM can be found at the back of this manual.
10. When replacing fuses, be sure the new fuse has the correct amperage rating. DO NOT exceed the rating or use one with a lower rating.
11. Care must be taken when jacking up and supporting the vehicle. Be sure to lift and support the vehicle at the proper locations. (See page IN-12)
   (a) If the vehicle is to be jacked up only at the front or rear end, be sure to block the wheels at the opposite end in order to ensure safety.
   (b) After the vehicle is jacked up, be sure to support it on stands. It is extremely dangerous to do any work on a vehicle raised on a jack alone, even for a small job that can be finished quickly.

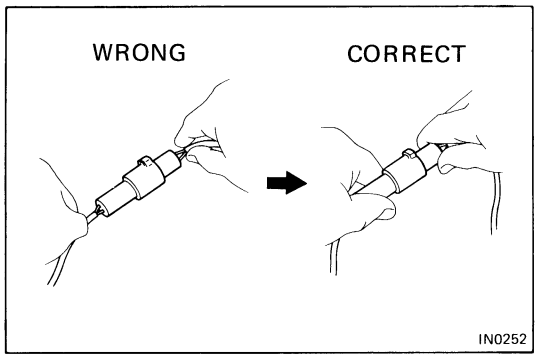

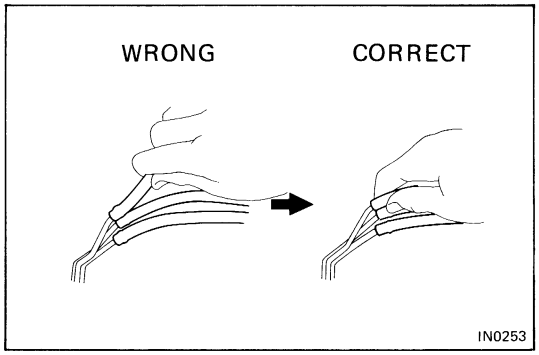

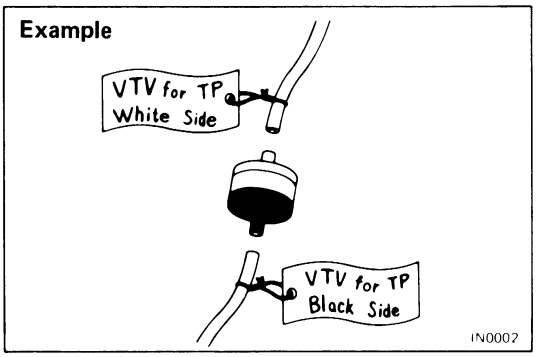

12. Observe the following precautions to avoid damage to the parts:
    (a) **Do not open the cover or case of the ECU unless absolutely necessary. (If the IC terminals are touched, the IC may be destroyed by static electricity.)**
    (b) To disconnect vacuum hoses, pull on the end, not the middle of the hose.
    (c) To pull apart electrical connectors, pull on the connector itself, not the wires.
    (d) Be careful not to drop electrical components, such as sensors or relays. If they are dropped on a hard floor, they should be replaced and not reused.
    (e) When steam cleaning an engine, protect the distributor, coil, air filter and air intake from water.
    (f) Never use an impact wrench to remove or install temperature switches or temperature sensors.
    (g) When checking continuity at the wire connector, insert the tester probe carefully to prevent terminals from bending.
    (h) When using a vacuum gauge, never force the hose onto a connector that is too large. Use a step-down adapter instead. Once the hose has been stretched, it may leak.

13. Tag hoses before disconnecting them:
    (a) When disconnecting vacuum hoses, use tags to identify how they should be reconnected.
    (b) After completing a job, double check that the vacuum hoses are properly connected. A label under the hood shows the proper layout.

PRECAUTIONS FOR VEHICLES EQUIPPED WITH SRS AIRBAG

The 1990 Supra for USA specifications is equipped with a SRS (Supplemental Restraint System) airbag.
Failure to carry out service operations in the correct sequence could cause the airbag system to unexpectedly deploy during servicing, possibly leading to a serious accident.
Further, if a mistake is made in servicing the airbag system, it is possible the airbag may fail to operate when required. Before performing servicing (including removal or installation of parts, inspection or replacement), be sure to read the following items carefully, then follow the correct procedure described in this manual.

Locations of Airbag Components

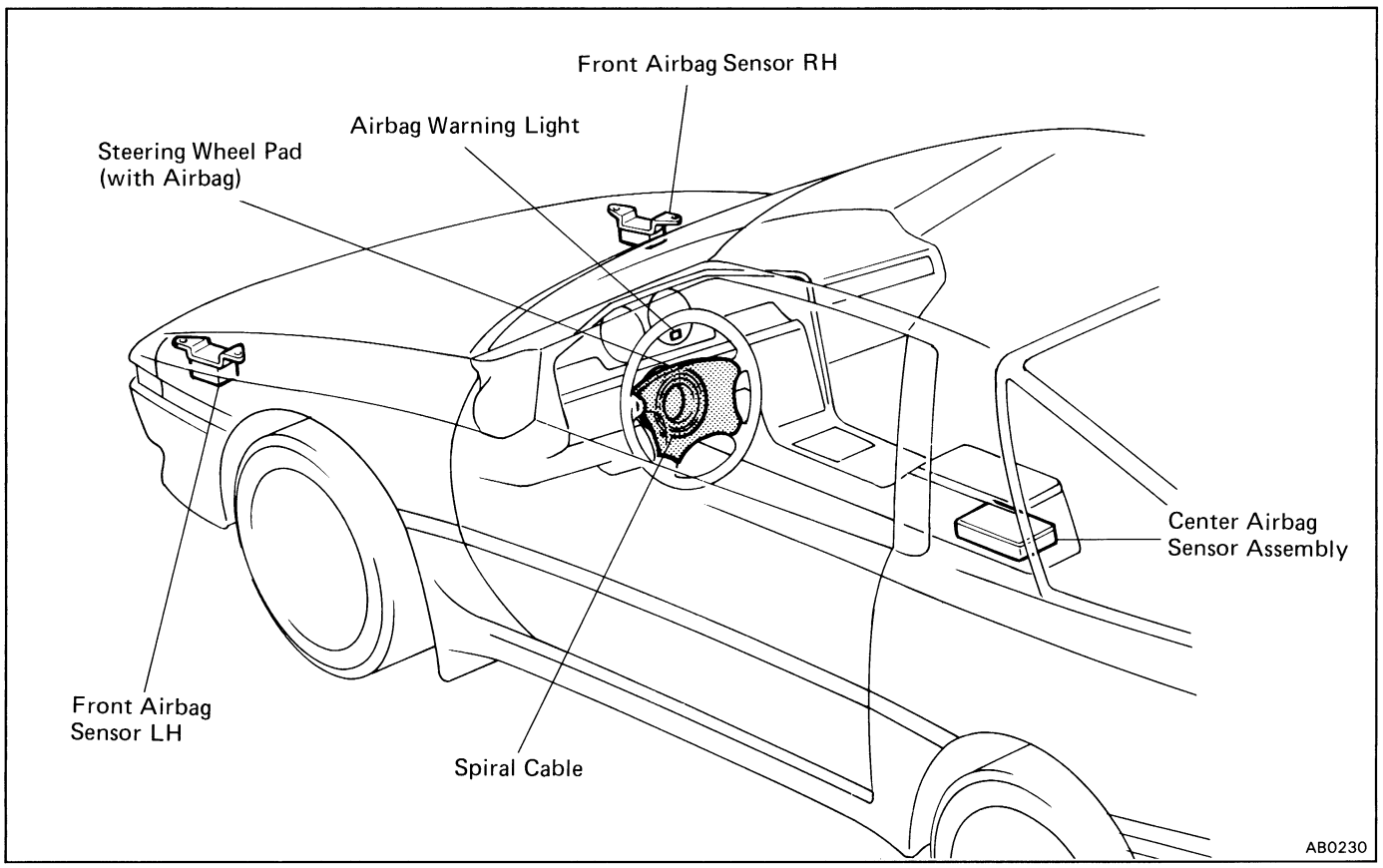

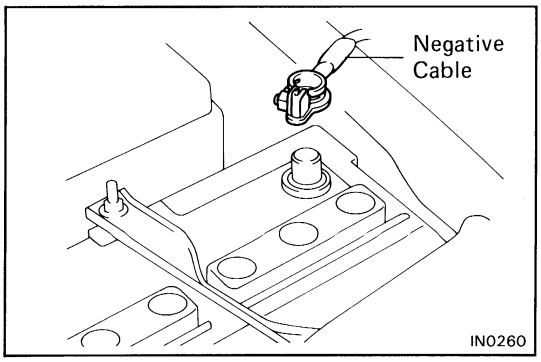

1. Malfunction symptoms of the airbag system are difficult to confirm, so the diagnostic codes become the most important source of information when troubleshooting.

   When troubleshooting the airbag system, always inspect the diagnostic codes before disconnecting the battery (See page AB-24).

2. **Work must be started after approx. 20 seconds or longer from the time the ignition switch is turned to the LOCK position and the negative (−) terminal cable is disconnected from the battery.**

   (The airbag system is equipped with a back-up power source so that if work is started within 20 seconds of disconnecting the negative (−) terminal cable of the battery, the airbag may be deployed.)

When the negative (—) terminal cable is disconnected from the battery, memory of the clock and audio systems will be cancelled. So before starting work, make a record of the contents memorized by each memory system. Then when work is finished, reset the clock and audio systems as before.

To avoid erasing the memory of each memory system, never use a back-up power supply from outside the vehicle.

3. Even in cases of a minor collision where the airbag does not deploy, the front airbag sensors and the steering wheel pad should be inspected (See page AB-11).
4. Never use airbag parts from another vehicle. When replacing parts, replace them with new parts.
5. Before repairs, remove the airbag sensors if shocks are likely to be applied to the sensors during repairs.
6. The center airbag sensor assembly contains mercury. After performing replacement, do not destroy the old part. When scrapping the vehicle or replacing the center airbag sensor assembly itself, remove the center airbag sensor assembly and dispose of it as toxic waste.
7. Never disassemble and repair the front airbag sensors, center airbag sensor assembly or steering wheel pad in order to reuse it.
8. If the front airbag sensors, center airbag sensor assembly or steering wheel pad have been dropped, or if there are cracks, dents or other defects in the case, bracket or connector, replace them with new ones.
9. Do not expose the front airbag sensors, center airbag sensor assembly or steering wheel pad directly to hot air or flames.
10. Use a volt/ohmmeter with high impedance (10 kΩ/V minimum) for troubleshooting of the electrical circuit.
11. Information labels are attached to the periphery of the airbag components. Follow the notices.
12. After work on the airbag system is completed, perform the airbag warning light check (See page AB-29).

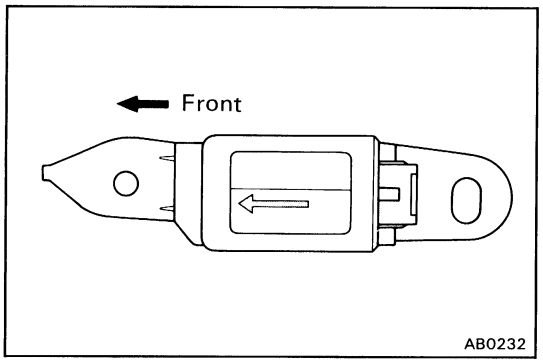

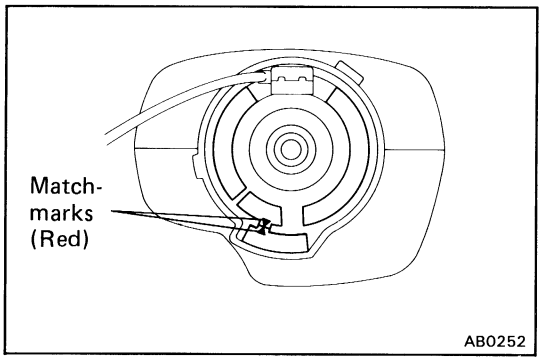

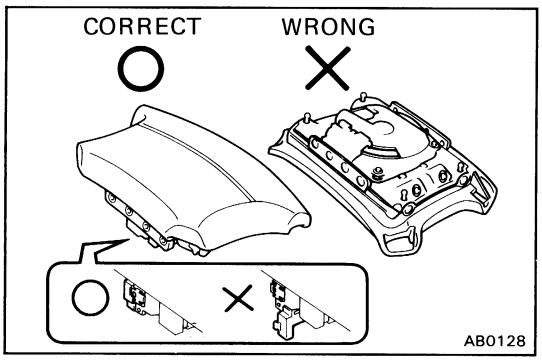

FRONT AIRBAG SENSOR

1. Never reuse the front airbag sensors involved in a collision when the airbag has deployed (Replace both the left and right airbag sensors).
2. Install the front airbag sensor with the arrow on the sensor facing toward the front of the vehicle.
3. The front airbag sensor set bolts have been anti-rust treated.

   When the sensor is removed, always replace the set bolts with new ones.
4. The front airbag sensor is equipped with an electrical connection check mechanism. Be sure to lock this mechanism securely when connecting the connector. If the connector is not securely locked, a malfunction code will be detected by the diagnosis system (See page AB-9).

SPIRAL CABLE (IN COMBINATION SWITCH)

The steering wheel must be fitted correctly to the steering column with the spiral cable at the neutral position, otherwise cable disconnection and other troubles may result. Refer to page AB-16 of this manual concerning correct steering wheel installation.

STEERING WHEEL PAD (WITH AIRBAG)

1. **When removing the steering wheel pad or handling a new steering wheel pad, it should be placed with the pad top surface facing up.** In this case, the twin-lock type connector lock lever should be in the locked state and care should be taken to place it so the connector will not be damaged. And do not store a steering wheel pad on top of another one (Storing the pad with its metallic surface up may lead to a serious accident if the airbag inflates for some reason).
2. **Never measure the resistance of the airbag squib (This may cause the airbag to deploy, which is very dangerous).**

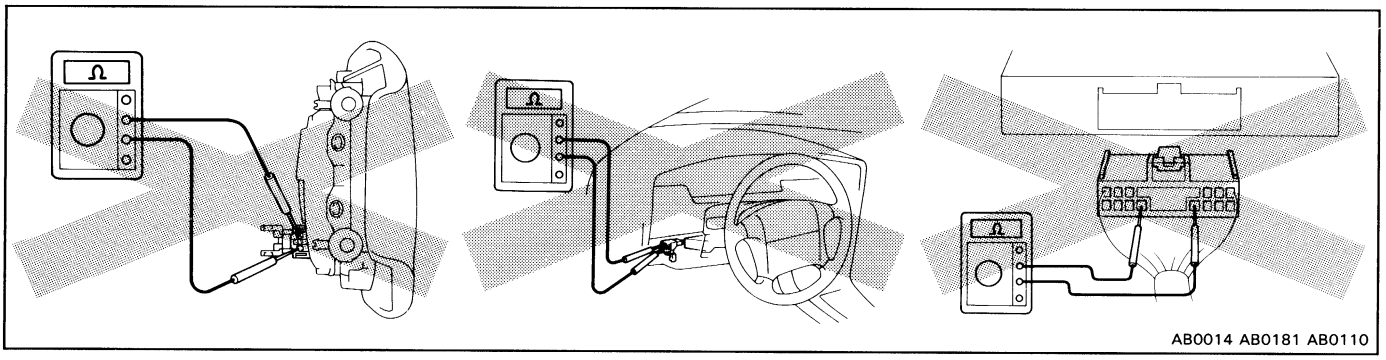

3. Grease should not be applied to the steering wheel pad and the pad should not be cleaned with detergents of any kind.
4. Store the steering wheel pad where the ambient temperature remains below 93°C (200°F), without high humidity and away from electrical noise.
5. When using electric welding, first disconnect the airbag connector (yellow color and 2 pins) under the steering column near the combination switch connector before starting work.
6. **When disposing of a vehicle or the steering wheel pad alone, the airbag should be deployed using an SST before disposal (See page AB-82). Perform the operation in a place away from electrical noise.**

CENTER AIRBAG SENSOR ASSEMBLY

The connector to the center airbag sensor assembly should be connected or disconnected with the sensor mounted on the floor. If the connector is connected or disconnected while the center airbag sensor assembly is not mounted to the floor, it could cause undesired ignition of the airbag system.

WIRE HARNESS AND CONNECTOR

The airbag system's wire harness is integrated with the cowl wire harness assembly. The wires for the airbag wire harness are encased in a yellow corrugated tube. All the connectors for the system are also a standard yellow color. If the airbag system wire harness becomes disconnected or the connector becomes broken due to an accident, etc., repair or replace it as shown on page AB-21.

PRECAUTIONS FOR VEHICLES EQUIPPED WITH A CATALYTIC CONVERTER

CAUTION: If large amounts of unburned gasoline flow into the converter, it may overheat and create a fire hazard. To prevent this, observe the following precautions and explain them to your customer.

1. **Use only unleaded gasoline.**
2. **Avoid prolonged idling.**

   Avoid running the engine at idle speed for more than 20 minutes.
3. **Avoid spark jump test.**

   (a) Spark jump test only when absolutely necessary. Perform this test as rapidly as possible.

   (b) While testing, never race the engine.
4. **Avoid prolonged engine compression measurement.**

   Engine compression tests must be made as rapidly as possible.
5. **Do not run engine when fuel tank is nearly empty.**

   This may cause the engine to misfire and create an extra load on the converter.
6. **Avoid coasting with ignition turned off and prolonged braking.**
7. **Do not dispose of used catalyst(s) along with parts contaminated with gasoline or oil.**

PRECAUTIONS FOR VEHICLES WITH AN AUDIO SYSTEM WITH BUILT-IN ANTI-THEFT SYSTEM

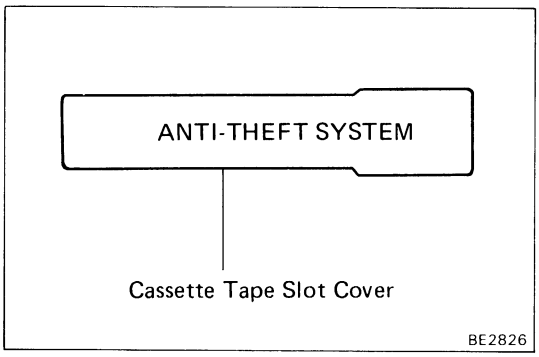

Audio Systems displaying the sign "ANTI-THEFT SYSTEM" shown on the left has a built-in anti-theft system which makes the audio system soundless if stolen.

If the power source for the audio system is cut even once, the anti-theft system operates so that even if the power source is reconnected, the audio system will not produce any sound unless the ID number selected by the customer is input again.

Accordingly, when performing repairs on vehicles equipped with this system, before disconnecting the battery terminals or removing the audio system the customer should be asked for the ID number so that the technician can input the ID number afterwards, or else a request made to the customer to input the ID number.

For the method to input the ID number or cancel the anti-theft system, refer to the Owner's Manual.

VEHICLE LIFT AND SUPPORT LOCATIONS

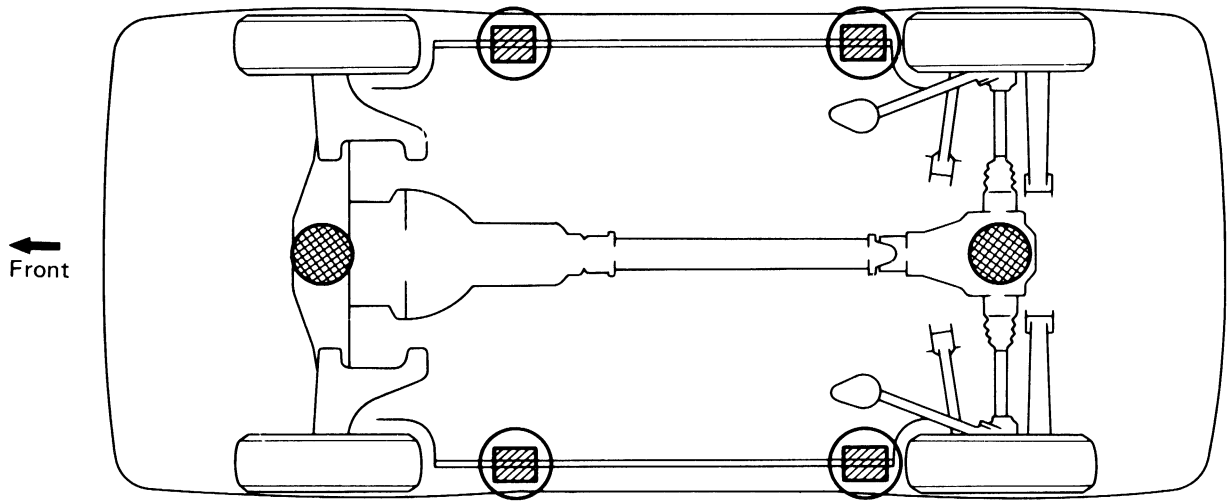

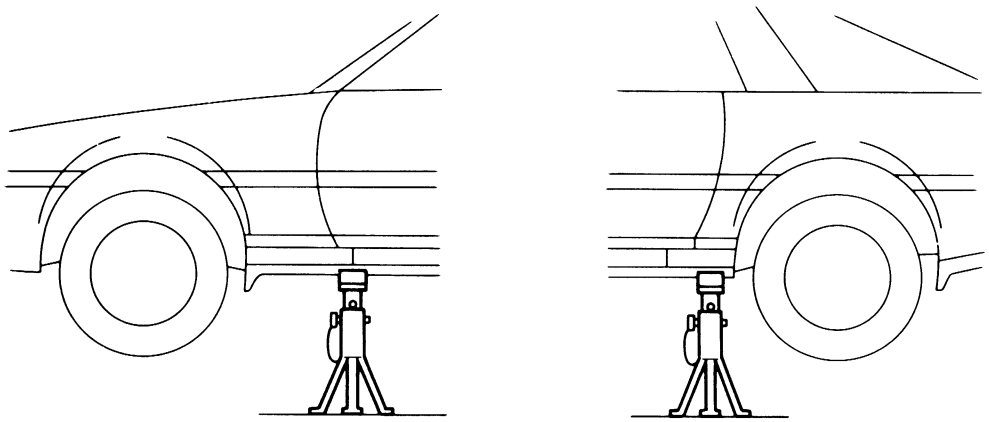

JACK POSITION
- Front ..... Center of front suspension crossmember
- Rear ..... Jack up support of differential carrier

PANTOGRAPH JACK POSITION

SUPPORT POSITION
- Safety stand .....

IN0088
IN0089

ABBREVIATIONS USED IN THIS MANUAL

A.B.S.	Anti-Lock Brake System
A/C	Air Conditioner
ALR	Automatic Locking Retractor
APPROX.	Approximation
A/T, ATM	Automatic Transmission
ATF	Automatic Transmission Fluid
B_0	Overdrive Brake
B_1	Second Coast Brake
B_2	Second Brake
B_3	First and Reverse Brake
BTDC	Before Top Dead Center
BVSV	Bimetal Vacuum Switching Valve
C_0	Overdrive Direct Clutch
C_1	Forward Clutch
C_2	Direct Clutch
CB	Circuit Breaker
CD	Compact Disc
CRS	Child Restraint System
DOHC	Double Over Head Camshaft
DP	Dash Pot
ECT	Electronic Controlled Transmission
ECU	Electronic Controlled Unit
EFI	Electronic Fuel Injection
EGR	Exhaust Gas Recirculation
ELR	Emergency Locking Retractor
ESA	Electronic Spark Advance
ETR	Electronic Tuning Radio
EVAP	Evaporative (Emission Control)
EX	Exhaust
Ex.	Except
F_0	Overdrive One-Way Clutch
F_1	No. 1 One-Way Clutch
F_2	No. 2 One-Way Clutch
FIPG	Formed in Place Gasket
FL	Fusible Link
Fr	Front
IG	Ignition
IN	Intake
ISC	Idle Speed Control
JB	Junction Block
LED	Light Emitting Diode
LH	Left-Hand
LSD	Limited Slip Differential
Max.	Maximum
MP	Multipurpose
M/T	Manual Transmission
O/D	Overdrive
O/S	Oversize
P & BV	Proportioning and By-Pass Valve
PCV	Positive Crankcase Ventilation
PPS	Progressive Power Steering
PS	Power Steering
RH	Right-Hand
SRS	Supplemental Restraint System
SSM	Special Service Materials
SST	Special Service Tools
STD	Standard
SW	Switch
TCCS	Toyota Computer Controlled System
TEMS	Toyota Electronic Modulated Suspension
T/M	Transmission
TWC	Three-Way Catalyst
U/S	Undersize
VSV	Vacuum Switching Valve
w/	With
w/o	Without

MAINTENANCE

	Page
MAINTENANCE SCHEDULE	MA-2
MAINTENANCE OPERATIONS	MA-6
GENERAL MAINTENANCE	MA-14

GENERAL NOTES:

- The maintenance schedule for the vehicle consists of separate A and B schedules which are applicable depending on how the vehicle is used. Confirm the vehicle's usage conditions, select the appropriate schedule and service the vehicle accordingly.
- Every service item in the periodic maintenance list be performed.
- Failure to do even one item can cause the engine to run poorly and increase exhaust emissions.

MAINTENANCE SCHEDULE

SCHEDULE A

Maintenance operation: A = Check and adjust if necessary;
R = Replace, change or lubricate;
I = Inspect and correct or replace if necessary

CONDITION

- Towing a trailer, using a camper or car top carrier.
- Repeated short trips of less than 5 miles (8 km) and outside temperatures remain below freezing.
- Extensive idling and/or low speed driving for long distances such as police, taxi or door-to-door delivery use.
- Operating on dusty, rough, muddy or salt spread roads.

System	Service interval (Odometer reading or months, whichever comes first) / Maintenance items		Maintenance services beyond 60,000 miles (96,000 km) should be performed at the same intervals shown in each maintenance schedule.																	See Page (item No.)
		Miles × 1,000	3.75	7.5	11.25	15	18.75	22.5	26.25	30	33.75	37.5	41.25	45	48.75	52.5	56.25	60	Months	
		km × 1,000	6	12	18	24	30	36	42	48	54	60	66	72	78	84	90	96		
ENGINE	Timing belt (1)																	R	—	MA-6 (item 1)
	Valve clearance																	A	A: Every 72 months	MA-8 (item 12)
	Drive belts		I: First period, 60,000 miles (96,000 km) or 72 months I: After that, every 7,500 miles (12,000 km) or 12 months																	MA-6 (item 2)
	Engine oil★	7M-GE engine	R	R	R	R	R	R	R	R	R	R	R	R	R	R	R	R	R: Every 6 months	MA-7 (item 6)
		7M-GTE engine	R: Every 2,500 miles (4,000 km) or 3 months																	
	Engine oil filter★	7M-GE engine	R	R	R	R	R	R	R	R	R	R	R	R	R	R	R	R	R: Every 6 months	MA-7 (item 6)
		7M-GTE engine	R: Every 5,000 miles (8,000 km) or 6 months																	
	Engine coolant		R: First period, 45,000 miles (72,000 km) or 36 months R: After that, every 30,000 miles (48,000 km) or 24 months																	MA-7 (item 7)
	Exhaust pipes and mountings					I				I				I				I	I: Every 24 months	MA-8 (item 11)
FUEL	Air filter★ (2)	7M-GE engine	I	I	I	I	I	I	I	R	I	I	I	I	I	I	I	R	I: Every 6 months R: Every 36 months	MA-7 (item 4, 5)
		7M-GTE engine	I: Every 5,000 miles (8,000 km) or 6 months R: Every 30,000 miles (48,000 km) or 36 months																	MA-7 (item 4, 5)
	Fuel lines and connections (3)									I								I	I: Every 36 months	MA-8 (item 10)
	Fuel tank cap gasket																	R	R: Every 72 months	MA-8 (item 9)
IGNITION	Spark plugs																	R	R: Every 72 months	MA-7 (item 3)
EVAP	Charcoal canister																	I	I: Every 72 months	MA-8 (item 8)

SCHEDULE A (Cont'd)

System	Service interval (Odometer reading or months, whichever comes first) / Maintenance items	Maintenance services beyond 60,000 miles (9,6000 km) should be performed at the same intervals shown in each maintenance schedule.																	See Page (item No.)
		Miles × 1,000	3.75	7.5	11.25	15	18.75	22.5	26.25	30	33.75	37.5	41.25	45	48.75	52.5	56.25	60	Months	
		km × 1,000	6	12	18	24	30	36	42	48	54	60	66	72	78	84	90	96		
BRAKES	Brake linings and drums (4)			I		I		I		I		I		I		I		I	I: Every 12 months	MA-9 (item 15)
	Brake pads and discs			I		I		I		I		I		I		I		I	I: Every 12 months	MA-9 (item 14)
	Brake line pipes and hoses					I				I				I				I	I: Every 24 months	MA-9 (item 13)
CHASSIS	Steering linkage			I		I		I		I		I		I		I		I	I: Every 12 months	MA-10 (item 16)
	SRS airbag	I: First period, 10 years I: After that, every 2 years																		MA-10 (item 17)
	Ball joints and dust covers			I		I		I		I		I		I		I		I	I: Every 12 months	MA-11 (item 19)
	Automatic transmission, manual transmission and differential oil					R				R				R				R	I: Every 24 months	MA-11 (item 21)
	Steering gear housing oil (5)					I				I				I				I	I: Every 24 months	MA-10 (item 18)
	Bolts and nuts on chassis and body (6)			I		I		I		I		I		I		I		I	I: Every 12 months	MA-12 (item 22)

★ Mark indicates maintenance which is part of the warranty conditions for the engine control system. The warranty period is in accordance with the owner's guide or the warranty booklet. (★ : California specification vehicles.)

NOTE:

(1) Applicable to vehicles operated under conditions of extensive idling and / or low speed driving for long distances such as police, taxi or door-to-door delivery use.

(2) Applicable when operating mainly on dusty roads.

(3) Includes inspection of vapor vent system.

(4) Also applicable to lining drum for parking brake.

(5) Check for oil leaks from steering gear box.

(6) Applicable only when operating mainly on rough, muddy roads. The applicable parts are listed below. For other usage conditions, refer to SCHEDULE B.

- Front and rear suspension member to cross body.
- Bolts for sheet installation.

SCHEDULE B

CONDITION

Conditions other than those listed for SCHEDULE A.

System	Service interval (Use odometer reading or months, whichever comes first) / Maintenance items		Maintenance services beyond 60,000 miles (96,000 km) should continue to be performed at the same intervals shown for each maintenance schedule.									See Page (item No.)
		Miles × 1,000	7.5	15	22.5	30	37.5	45	52.5	60	Months	
		km × 1,000	12	24	36	48	60	72	84	96		
ENGINE	Valve clearance									A	A: Every 72 months	MA-8 (item 12)
	Drive belts		I: First period, 60,000 miles (96,000 km) or 72 months I: After that, every 7,500 miles (12,000 km) or 12 months									MA-6 (item 2)
	Engine oil★	7M-GE engine	R	R	R	R	R	R	R	R	R: Every 12 months	MA-7 (item 6)
		7M-GTE engine	R: Every 5,000 miles (8,000 km) or 6 months									
	Engine oil filter★	7M-GE engine	R	R	R	R	R	R	R	R	R: Every 12 months	MA-7 (item 6)
		7M-GTE engine	R: Every 10,000 miles (16,000 km) or 12 months									
	Engine coolant		R: First period, 45,000 miles (72,000 km) or 36 months R: After that, every 30,000 miles (48,000 km) or 24 months									MA-7 (item 7)
	Exhaust pipes and mountings					I				I	I: Every 36 months	MA-8 (item 11)
FUEL	Air filter★					R				R	R: Every 36 months	MA-7 (item 5)
	Fuel lines and connections (1)					I				I	I: Every 36 months	MA-8 (item 10)
	Fuel tank cap gasket									R	R: Every 72 months	MA-8 (item 9)
IGNITION	Spark plugs									R	R: Every 72 months	MA-7 (item 3)
EVAP	Charcoal canister									I	I: Every 72 months	MA-8 (item 8)
BRAKES	Brake linings and drums (2)			I		I		I		I	I: Every 24 months	MA-9 (item 15)
	Brake pads and discs			I		I		I		I	I: Every 24 months	MA-9 (item 14)
	Brake line pipes and hoses			I		I		I		I	I: Every 24 months	MA-9 (item 13)

SCHEDULE B (Cont'd)

System	Service interval (Use odometer reading or months, whichever comes first) / Maintenance items	Maintenance services beyond 60,000 miles (96,000 km) should continue to be performed at the same intervals shown for each maintenance schedule.									See Page (item No.)
		Miles × 1,000	7.5	15	22.5	30	37.5	45	52.5	60	Months	
		km × 1,000	12	24	36	48	60	72	84	96		
CHASSIS	Steering linkage			I		I		I		I	I: Every 24 months	MA-10 (item 16)
	SRS airbag		I: First period, 10 years I: After that, every 2 years									MA-10 (item 17)
	Ball joints and dust covers			I		I		I		I	I: Every 24 months	MA-11 (item 19)
	Automatic transmission, manual transmission and differential (ex. LSD) oil			I		I		I		I	I: Every 24 months	MA-11 (item 20)
	Limited slip differential (LSD) oil (3)			I		R		I		R	I: Every 24 months R: Every 48 months	MA-11 (item 20) MA-11 (item 21)
	Steering gear housing oil (4)			I		I		I		I	I: Every 24 months	MA-10 (item 18)
	Bolts and nuts on chassis and body (5)			I		I		I		I	I: Every 24 months	MA-12 (item 22)

★ Mark indicates maintenance which is part of the warranty conditions for the engine control system. The warranty period is in accordance with the owner's guide or the warranty booklet. (★ : California specification vehicles.)

NOTE:

(1) Includes inspection of vapor vent system.

(2) Also applicable to lining drum for parking brake.

(3) Check for oil leaks.

(4) Check for oil leaks from steering gear box.

(5) The applicable parts are listed below.

- Front and rear suspension member to cross body.
- Bolts for sheet installation.

MAINTENANCE OPERATIONS

ENGINE

Cold Engine Operations

1. REPLACE TIMING BELT

(a) Remove the timing belt.
(See pages EM-22 to 25)

(b) Install the timing belt.
(See pages EM-28 to 31)

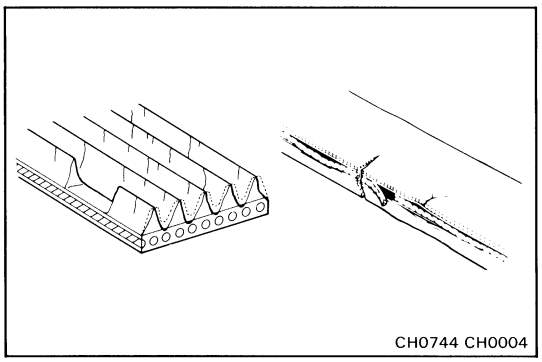

2. INSPECT DRIVE BELTS

(a) Visually check the belt for excessive wear, frayed cords etc.

If necessary, replace the drive belt.

HINT: Cracks on the rib side of a belt are considered acceptable. If the belt has chunks missing from the ribs, it should be replaced.

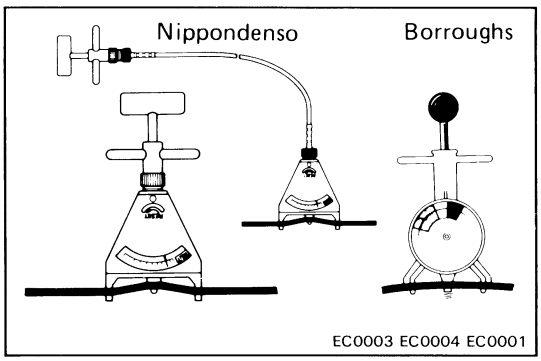

(b) Using a belt tension gauge, check the drive belt tension.

Belt tension gauge:

Nippondenso	BTG-20 (95506-00020)
Borroughs	No. BT-33-73F

Drive belt tension:

Alternator	**Used belt**	**115 ± 20 lb**
	New belt	**175 ± 5 lb**
PS pump	**Used belt**	**100 ± 20 lb**
	New belt	**160 ± 20 lb**
A/C	**Used belt**	**105 ± 10 lb**
	New belt	**160 ± 20 lb**

If necessary, adjust the drive belt tension.

HINT:

- ''New belt'' refers to a belt which has been used less than 5 minutes on a running engine.
- ''Used belt'' refers to a belt which has been used on a running engine for 5 minutes or more.
- After replacing the drive belt, check that it fits properly in the ribbed grooves, especially in the places difficult to see.
- After installing a new belt, run the engine for approx. 5 minutes and then recheck the tension.

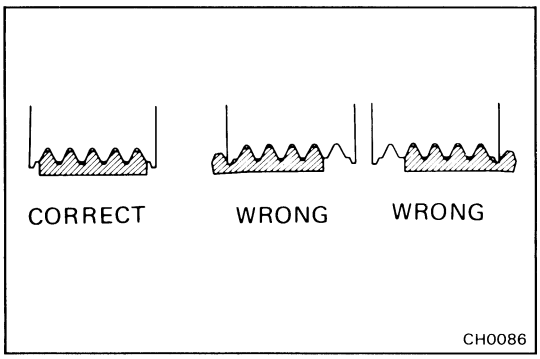

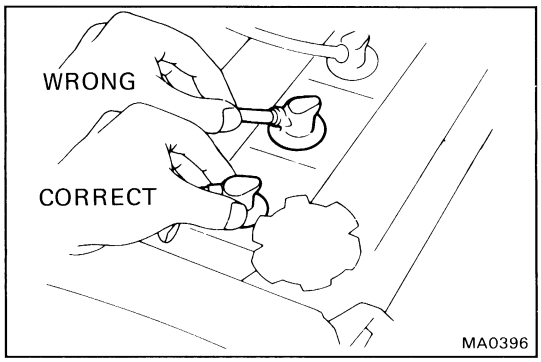

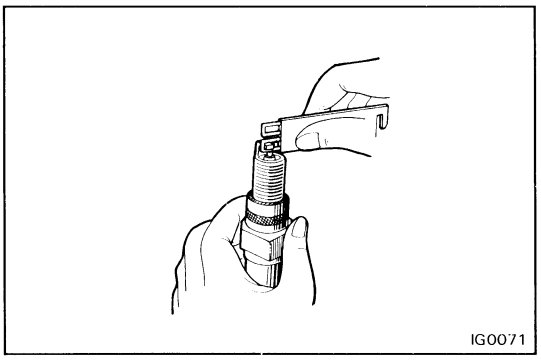

3. REPLACE SPARK PLUGS

(a) Disconnect the high-tension cords at the boot. Do not pull on the cords.

(b) Using plug wrench (16 mm), remove the spark plugs.

(c) Check the gap on the new plugs.

Correct electrode gap

7M-GE	**1.1 mm (0.043 in.)**
7M-GTE	**0.8 mm (0.031 in.)**

Recommended spark plugs:

7M-GE	**ND**	**PQ16R**
	NGK	**BCPR5EP11**
7M-GTE	**ND**	**PQ20R-P8**
	NGK	**BCPR6EP-N8**

HINT: If adjusting the gap of a new plug, bend only the base of the ground electrode. Do not touch the tip. Never attempt to adjust the gap on a used plug.

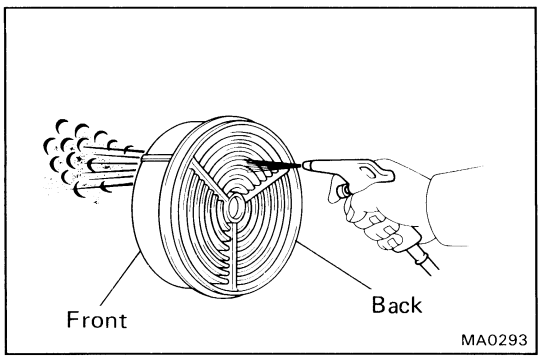

4. INSPECT AIR FILTER

(a) Visually check that the air cleaner element is not excessively dirty, damaged or oily.

If necessary, replace the air cleaner element.

(b) Clean the element with compressed air.

First blow from the back side thoroughly, then blow off the front side of the element.

5. REPLACE AIR FILTER

Replace the air cleaner element with a new one.

6. REPLACE ENGINE OIL AND OIL FILTER
(See page LU-5)

Oil grade: API grade SG, multigrade, fuel-efficient and recommended viscosity oil.

Engine oil capacity:
Drain and refill
w/o Oil filter change
4.1 liters (4.3 US qts, 3.6 Imp. qts)
w/ Oil filter change
4.4 liters (4.7 US qts, 3.9 Imp. qts)

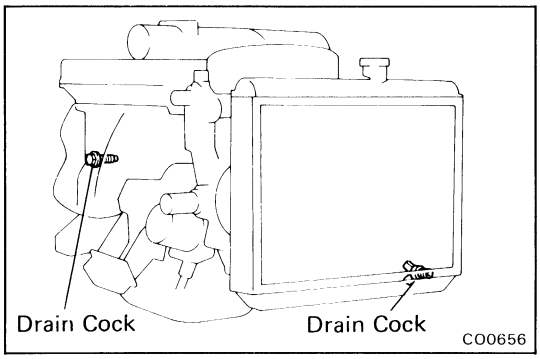

7. REPLACE ENGINE COOLANT
(See page CO-5)

Coolant capacity (w/ Heater or air conditioner):

7M-GE	**M/T 8.1 liters (8.6 US qts, 7.1 Imp. qts)**
	A/T 8.0 liters (8.5 US qts, 7.0 Imp. qts)
7M-GTE	**M/T 8.2 liters (8.7 US qts, 7.2 Imp. qts)**
	A/T 8.1 liters (8.5 US qts, 7.1 Imp. qts)

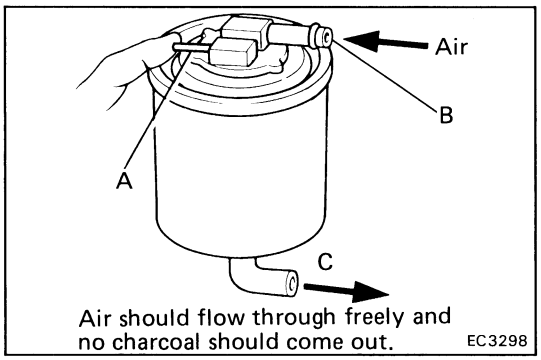

8. INSPECT CHARCOAL CANISTER

(a) Disconnect the hoses from the charcoal canister. Label the hoses for correct reinstallation.

(b) Plug pipe A with your finger and blow compressed air (3 kg/cm², 43 psi or 294 kPa) through pipe B (fuel tank side).

- Check that air comes out of the bottom pipe C without resistance.
- Check that no activated charcoal comes out.

If necessary, replace the charcoal canister.

HINT: Do not attempt to wash the charcoal.

(c) Connect the hoses to the charcoal canister.

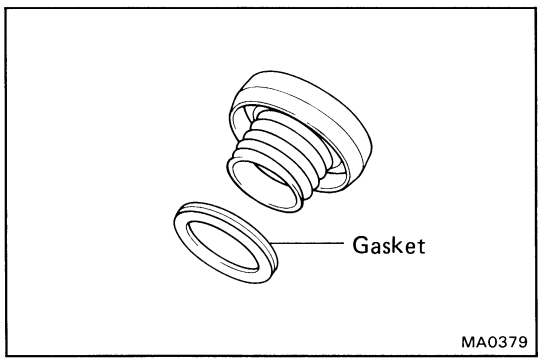

9. REPLACE GASKET IN FUEL TANK CAP

(a) Remove the old gasket (O-ring) from the tank cap. Do not damage the cap.

(b) Install the new gasket by hand.

(c) Inspect the cap for damage or cracks.

(d) Install the cap and check the torque limiter.

10. INSPECT FUEL LINES AND CONNECTIONS

Visually inspect the fuel lines for cracks, leakage, loose connections, deformation or tank band looseness.

11. INSPECT EXHAUST PIPES AND MOUNTINGS

Visually inspect the pipes, hangers, and connections for severe corrosion, leaks or damage.

12. ADJUST VALVE CLEARANCE

HINT: Check and adjust the valve clearance while the engine is cold.

(a) Remove the cylinder head covers.

(b) Measure and adjust valve clearance.
(See page EM-7)

Valve clearance (cold):

Intake	**0.15 — 0.25 mm (0.006 — 0.010 in.)**
Exhaust	**0.20 — 0.30 mm (0.008 — 0.012 in.)**

(c) Reinstall the cylinder head covers.

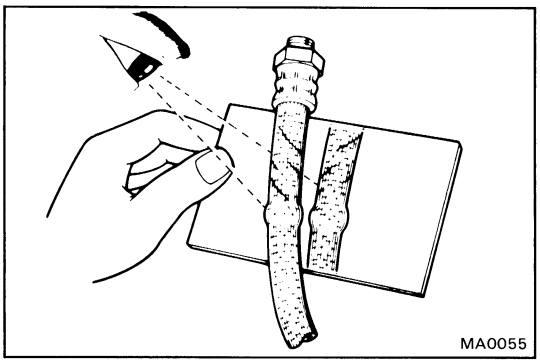

BRAKES

13. INSPECT BRAKE LINE PIPES AND HOSES

HINT: Inspect in a well lighted area. Inspect the entire circumference and length of the brake hoses using a mirror as required. Turn the front wheels fully right or left before inspecting the front brake.

(a) Check all brake lines and hoses for:

- Damage
- Wear
- Deformation
- Cracks
- Corrosion
- Leaks
- Bends
- Twists

(b) Check all clamps for tightness and connections for leakage.

(c) Check that the hoses and lines are clear of sharp edges, moving parts and the exhaust system.

(d) Check that the lines installed in grommets pass through the center of the grommets.

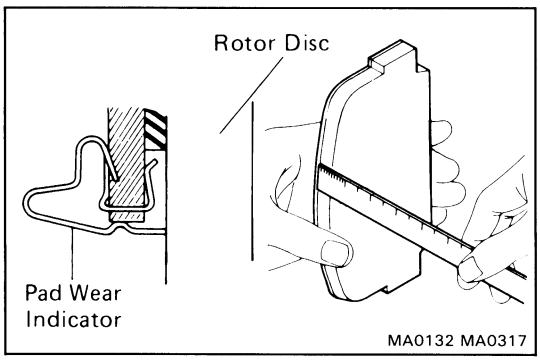

14. INSPECT FRONT AND REAR BRAKE PADS AND DISCS (See pages BR-28, 36)

(a) Check the thickness of the disc brake pads and check for irregular wear.

Minimum pad thickness: 1.0 mm (0.039 in.)

HINT: If a squealing or scraping noise comes from the brake during driving, check the pad wear indicator. If there are traces of the indicator contacting the disc rotor, the disc pad should be replaced.

(b) Check the disc for wear or runout.

Minimum disc thickness:
Front 21.0 mm (0.827 in.)
Rear 17.0 mm (0.669 in.)
Maximum disc runout: 0.13 mm (0.0051 in.)

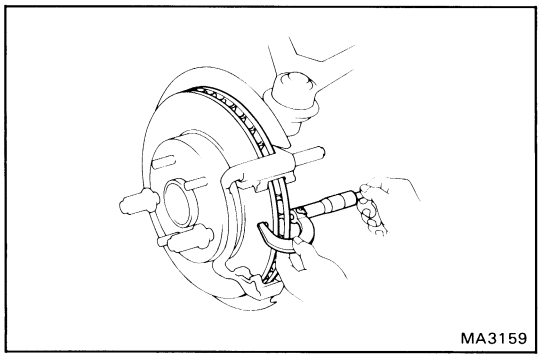

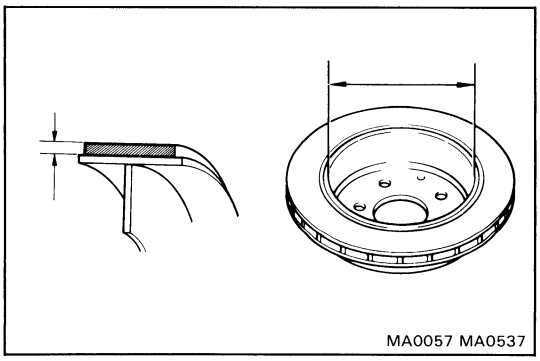

15. INSPECT PARKING BRAKE LININGS AND DRUMS (See page BR-41)

(a) Check the lining-to-drum contact condition and lining wear.

Minimum lining thickness: 1.0 mm (0.039 in.)

(b) Check the brake drum for scoring or wear.

Maximum drum inside diameter: 191 mm (7.52 in.)

(c) Clean the brake parts with a damp cloth.

HINT: Do not use compressed air to clean the brake parts.

(d) Settle the parking brake shoes and drum. When performing the road test in item 23, do the following:
- Drive the vehicle at approx. 30 mph (50 km/h) on a safe, level and dry road.
- With the parking brake release button pushed in, pull on the lever with 9 kg (20 lb, 88 N) of force.
- Drive the vehicle for approx. 1/4 mile (400 meters) in this condition.
- Repeat this procedure 2 or 3 times.
- Check parking lever travel.

If necessary, adjust the parking brake.

CHASSIS

16. INSPECT STEERING LINKAGE

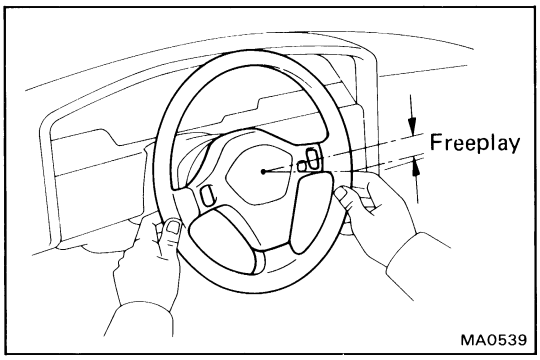

(a) Check the steering wheel freeplay.

Maximum steering wheel freeplay: 30 mm (1.18 in.)

With the vehicle stopped and pointed straight ahead, rock the steering wheel gently back and forth with light finger pressure.

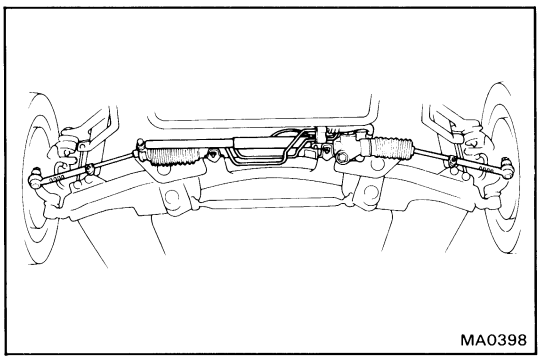

(b) Check the steering linkage for looseness or damage.

Check that:
- Tie rod ends do not have excessive play.
- Dust seals and boots are not damaged.
- Boot clamps are not loose.

17. INSPECT SRS AIRBAG

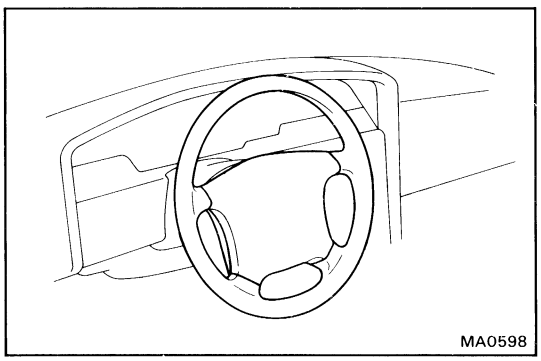

Visually inspect the steering wheel pad (airbag and inflater).
- Use the diagnosis check to check if there are abnormalities.
- Check that there are no cuts, cracks or noticeable color changes on the surface of the steering wheel pad or in the center groove of the pad.
- Remove the steering wheel pad from the vehicle and check the wiring and steering wheel for damage and corrosion due to rusting, etc.

If necessary, replace the steering wheel pad.

CAUTION:
- **For removal and replacement of the steering wheel pad, see page SR-5 and be sure to perform the operation in the correct order.**
- **Before disposing of the steering wheel pad, the airbag must first be deployed by using an SST. (See page AB-82)**

18. INSPECT STEERING GEAR HOUSING OIL

Check the steering gear housing for oil leakage.

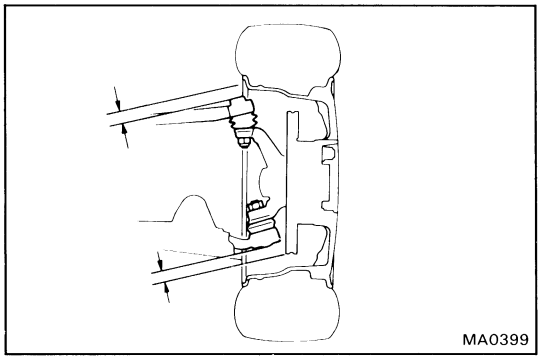

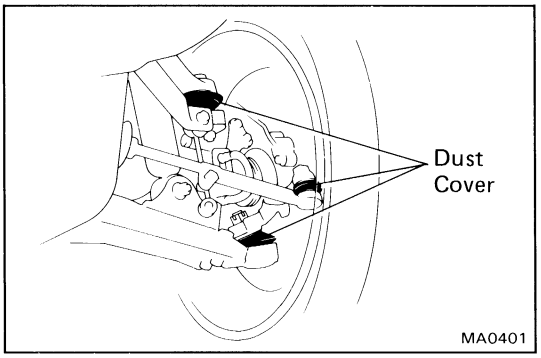

19. INSPECT UPPER AND LOWER BALL JOINTS AND DUST COVERS

(a) Inspect the ball joints for excessive looseness.

- Jack up the front of the vehicle and place wooden blocks with a height of 180 — 200 mm (7.09 — 7.87 in.) under the front tires.
- Lower the jack until there is about half a load on the front coil springs. Place stands under the vehicle for safety.
- Make sure the front wheels are in a straight forward position, and block them with chocks.
- Using a lever, pry up the end of the upper and lower arm, and check the amount of play.

Maximum ball joint vertical play:
Upper 0 mm (0 in.)
Lower 0.3 mm (0.012 in.)

If there is play, replace the ball joint.

(b) Inspect the dust cover for damage.

20. CHECK AUTOMATIC TRANSMISSION OR MANUAL TRANSMISSION AND DIFFERENTIAL OIL

Visually check the automatic transmission or manual transmission and differential for oil leakage.

If leakage is found, check for cause and repair.

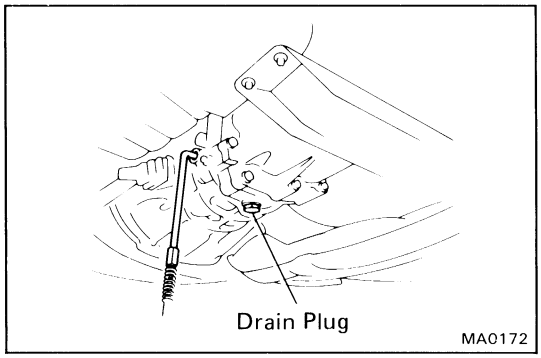

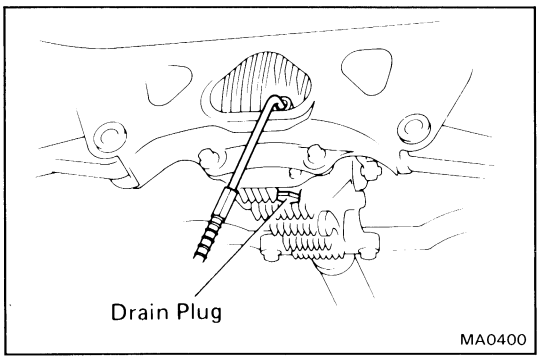

21. REPLACE MANUAL TRANSMISSION AND DIFFERENTIAL OIL

(a) Remove the drain plug and drain the oil.

(b) Clean the drain plug.

(c) Reinstall drain plug securely.

(d) Add new oil until it begins to run out of the filler hole.

Transmission oil—
Oil grade: API GL-4 or GL-5
Viscosity:
7M-GE SAE 75W—90 or 80W—90
7M-GTE SAE 75W—90
Capacity:
7M-GE 2.4 liters (2.5 US qts, 2.1 Imp. qts)
7M-GTE 3.0 liters (3.2 US qts, 2.6 Imp. qts)

Differential oil—
Oil grade: API GL-5 hypoid gear oil or for LSD oil (LSD only)
Viscosity: Above —18°C (0°F) SAE 90
Below —18°C (0°F) SAE 80W—90
Capacity: 1.3 liters (1.4 US qts, 1.1 Imp. qts)

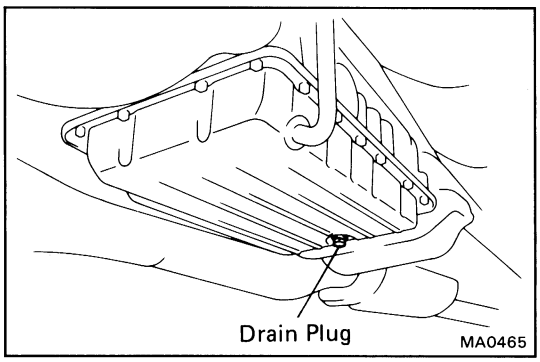

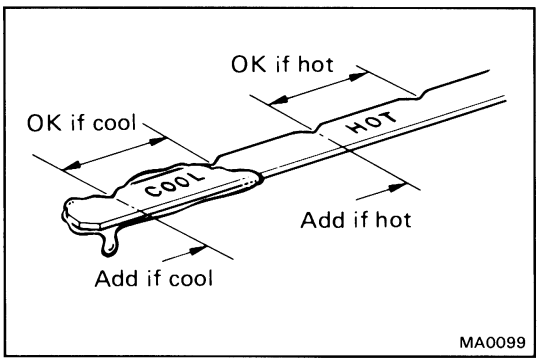

22. REPLACE AUTOMATIC TRANSMISSION FLUID

(a) Remove the drain plug and drain the fluid.

(b) Reinstall the drain plug securely.

(c) With the engine "OFF", add new fluid through the dipstick tube.

Fluid: ATF DEXRON® II

Drain and refill capacity (Reference):
1.6 liters (1.7 US qts, 1.4 Imp. qts)

(d) Start the engine and shift the selector into all positions from "P" through "L", and then shift into "P".

(e) With the engine idling, check the fluid level. Add fluid up to the "COOL" level on the dipstick.

NOTICE: Do not overfill.

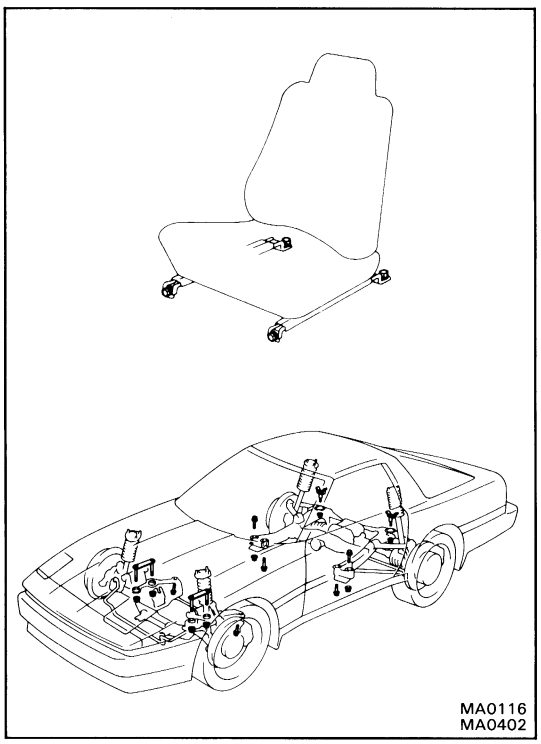

23. TIGHTEN BOLTS AND NUTS ON CHASSIS AND BODY

Tighten the following parts:

- Front seat mounting bolts

Torque: 375 kg-cm (27 ft-lb, 37 N·m)

- Front suspension member-to-body mounting bolts and nuts.

Torque: 1,300 kg-cm (94 ft-lb, 127 N·m)

- Rear suspension member-to-body mounting bolts and nuts.

Torque: 1,840 kg-cm (133 ft-lb, 180 N·m)

24. FINAL INSPECTION

(a) Check the operation of the body parts:

- Hood
  Auxiliary catch operates properly
  Hood locks securely when closed
- Front and back doors
  Door locks operate properly
  Doors close properly
- Seats
  Seat adjusts easily and locks securely in any position
  Front seat back locks securely in any position
  Folding-down rear seat backs lock securely

(b) Road test

- Check the engine and chassis for abnormal noises.
- Check that the vehicle does not wander or pull to one side.
- Check that the brakes work properly and do not drag.
- Perform setting down of the parking brake shoes and drum. (See page MA-10)

(c) Be sure to deliver a clean car and especially check:

- Steering wheel
- Shift lever knob
- All switch knobs
- Door handles
- Seats

GENERAL MAINTENANCE

These are the maintenance and inspection items which are considered to be the owner's responsibility. They can be performed by the owner or he can have them done at a service shop. These items include those which should be checked on a daily basis, those which, in most cases, do not require (special) tools and those which are considered to be reasonable for the owner to perform.
Items and procedures for general maintenance are as follows.

OUTSIDE VEHICLE

1. TIRES

(a) Check the pressure with a gauge. If necessary, adjust.

(b) Check for cuts, damage or excessive wear.

2. WHEEL NUTS

When checking the tires, check the nuts for looseness or for missing nuts. If necessary, tighten them.

3. TIRE ROTATION

It is recommended that tires be rotated every 7,500 miles (12,000 km).

4. WINDSHIELD WIPER BLADES

Check for wear or cracks whenever they do not wipe cleanly. If necessary, replace.

5. FLUID LEAKS

(a) Check underneath for leaking fuel, oil, water or other fluid.

(b) If you smell gasoline fumes or notice any leak, have the cause found and corrected.

6. DOORS AND ENGINE HOOD

(a) Check that all doors including the trunk lid, back door and tailgate operate smoothly, and that all latches lock securely.

(b) Check that the engine hood secondary latch secures the hood from opening when the primary latch is released.

INSIDE VEHICLE

7. LIGHTS

(a) Check that the headlights, stop lights, taillights, turn signal lights, and other lights are all working.

(b) Check the headlight aim.

8. WARNING LIGHTS AND BUZZERS

Check that all warning lights and buzzers function properly.

9. HORN

Check that it is working.

10. WINDSHIELD GLASS

Check for scratches, pits or abrasions.

11. WINDSHIELD WIPER AND WASHER

(a) Check operation of the wipers and washer.

(b) Check that the wipers do not streak.

12. WINDSHIELD DEFROSTER

Check that air comes out from the defroster outlet when operating the heater or air conditioner.

13. REAR VIEW MIRROR

Check that it is mounted securely.

14. SUN VISORS

Check that they move freely and are mounted securely.

15. STEERING WHEEL

Check that it has specified freeplay. Be alert for changes in steering condition, such as hard steering, excessive freeplay or strange noise.

16. SEATS

(a) Check that all front seat controls such as seat adjusters, seatback recliner, etc. operate smoothly.

(b) Check that all latches lock securely in any position.

(c) Check that the locks hold securely in any latched position.

(d) Check that the head restraints move up and down smoothly and that the locks hold securely in any latched position.

(e) For folding-down rear seat backs, check that the latches lock securely.

17. SEAT BELTS

(a) Check that the seat belt system such as buckles, retractors and anchors operate properly and smoothly.

(b) Check that the belt webbing is not cut, frayed, worn or damaged.

18. ACCELERATOR PEDAL

Check the pedal for smooth operation and uneven pedal effort or catching.

19. CLUTCH PEDAL (See page CL-3)

Check the pedal for smooth operation.

Check that the pedal has the proper freeplay.

20. BRAKE PEDAL (See page BR-5)

(a) Check the pedal for smooth operation.

(b) Check that the pedal has the proper reserve distance and freeplay.

(c) Check the brake booster function.

21. BRAKES

At a safe place, check that the brakes do not pull to one side when applied.

22. PARKING BRAKE (See page BR-7)

(a) Check that the lever has the proper travel.

(b) On a safe incline, check that vehicle is held securely with only the parking brake applied.

23. AUTOMATIC TRANSMISSION "PARK" MECHANISM

(a) Check the lock release button of the selector lever for proper and smooth operation.

(b) On an safe incline, check that vehicle is held securely with the selector lever in "P" position and all brakes released.

UNDER HOOD

24. WINDSHIELD WASHER FLUID

Check that there is sufficient fluid in the tank.

25. ENGINE COOLANT LEVEL

Check that the coolant level is between the "FULL" and "LOW" lines on the see-through reservoir.

26. RADIATOR AND HOSES

(a) Check that the front of the radiator is clean and not blocked with leaves, dirt or bugs.

(b) Check the hoses for cracks, links, rot or loose connections.

27. BATTERY ELECTROLYTE LEVEL

Check that the electrolyte level of all battery cells is between the upper and lower level lines on the case. If level is low, add distilled water only.

28. BRAKE AND CLUTCH FLUID LEVELS

(a) Check that the brake fluid level is near the upper level line on the see-through reservoir.

(b) Check that the clutch fluid level is within ± 5 mm (0.20 in.) of the reservoir hem.

29. ENGINE DRIVE BELTS

Check all drive belts for fraying, cracks, wear or oiliness.

30. ENGINE OIL LEVEL

Check the level on the dipstick with the engine turned off.

31. POWER STEERING FLUID LEVEL

Check the level.

The level should be in the "HOT" or "COLD" range depending on the fluid temperature.

32. AUTOMATIC TRANSMISSION FLUID LEVEL

(a) Park the vehicle on a level surface.

(b) With the engine idling and the parking brake applied, shift the selector into all positions from "P" to "L", and then shift into "P".

(c) Pull out the dipstick and wipe off the fluid with a clean rag. Re-insert the dipstick and check that the fluid level is in the "HOT" range.

(d) Perform this check with the fluid at normal driving temperature (70 — 80°C or 158 — 176°F)

HINT: Wait about 30 minutes before checking the fluid level after extended driving at high speeds, in hot weather, in heavy traffic or with a trailer.

33. EXHAUST SYSTEM

Visually inspect for cracks, holes or loose supports.

If any change in the sound of the exhaust or smell of the exhaust fumes is noticed, have the cause located and corrected.

ENGINE MECHANICAL

	Page
DESCRIPTION	EM-2
TROUBLESHOOTING	EM-4
ENGINE TUNE-UP	EM-7
IDLE AND/OR 2,500 RPM HC/CO CONCENTRATION CHECK METHOD	EM-18
COMPRESSION CHECK	EM-20
TIMING BELT	EM-22
CYLINDER HEAD	EM-32
CYLINDER BLOCK	EM-63

DESCRIPTION

The 7M-GE and 7M-GTE engines are an in-line 6-cylinder 3.0 liter DOHC 24 valve engine.

7M-GE

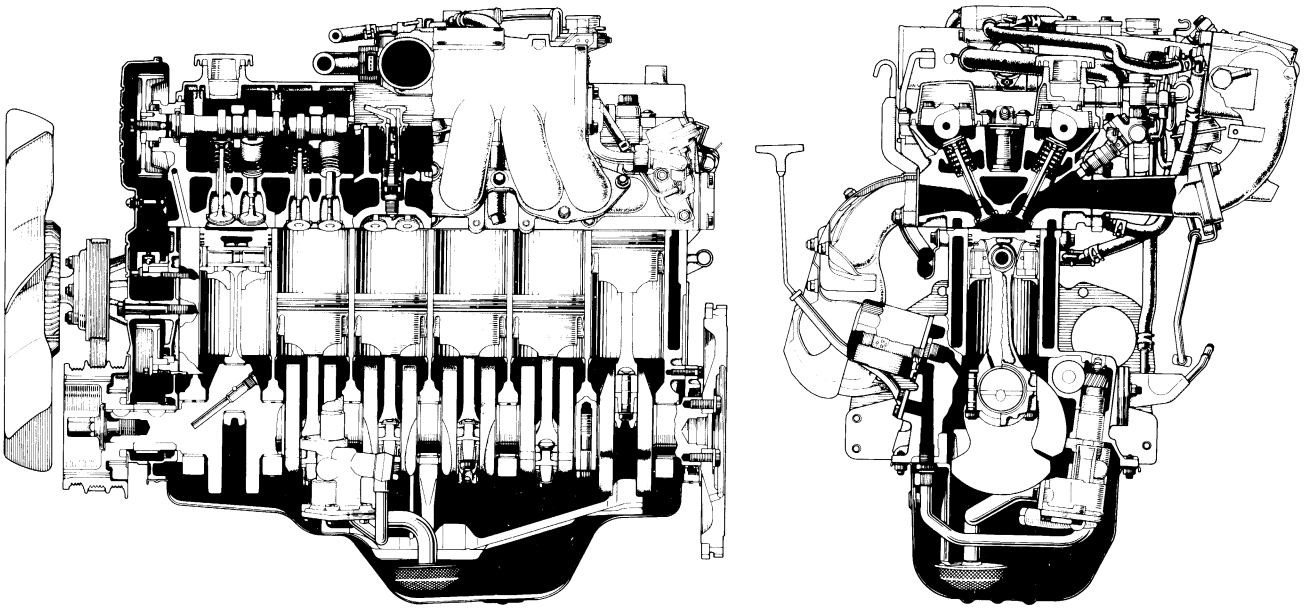

7M-GTE

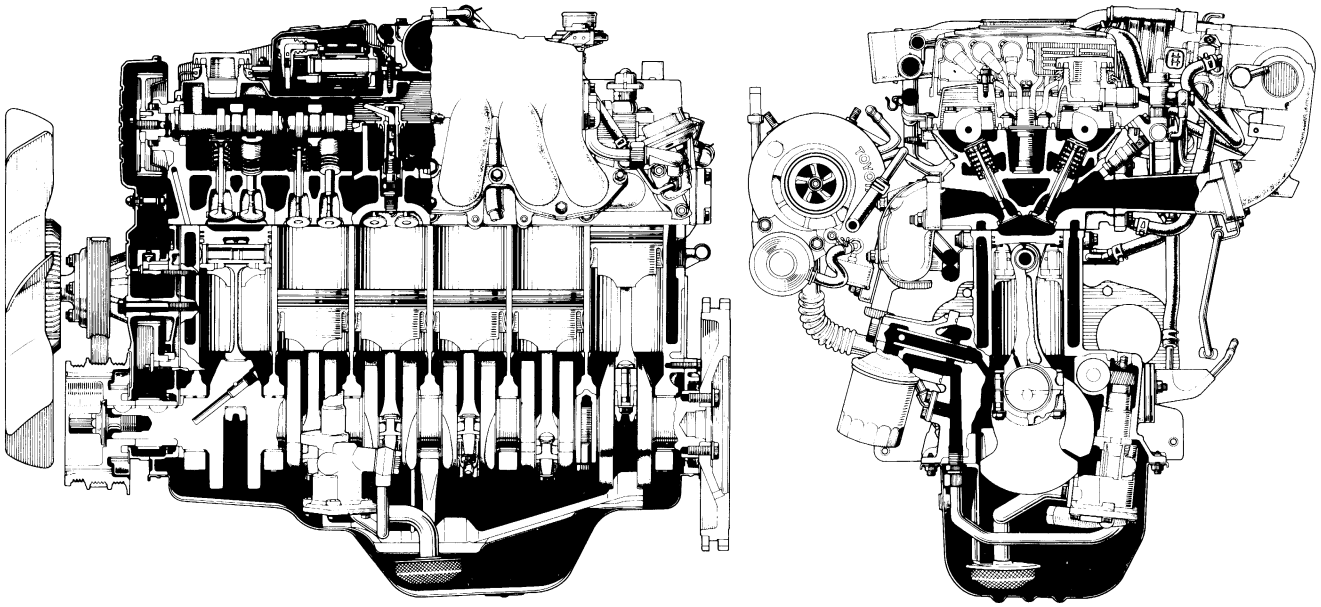

EM6822 EM6823
EM6821 EM6824

The 7M-GE, 7M-GTE engines are an in-line 6-cylinder engine with the cylinders numbered 1-2-3-4-5-6 from the front. The crankshaft is supported by 7 bearings specified by the inside of the crankcase. These bearings are made of kelmet.

The crankshaft is integrated with 12 weights which are cast along with it for balance. Oil holes are built into the crankshaft for supplying oil to the connecting rods, pistons and other components.

These engine's ignition order is 1-5-3-6-2-4. The cylinder head is made of aluminum alloy, with a cross flow type intake and exhaust layout and with pent roof type combustion chambers. The spark plugs are located in the center of the combustion chambers.

Exhaust and intake valves are equipped with irregular pitch springs with symmetrical ends made of oil tempered silicon chrome steel wire which are capable of following the valves even at high engine speeds.

Both the exhaust side cam shaft and the intake side cam shaft are driven by a single timing belt. The cam journal is supported at 7 places between the valve lifters of each cylinder and on the cylinder head of front end. Lubrication of the cam journal and cam is accomplished by oil being supplied through the oiler port in the center of the camshaft.

Adjustment of the valve clearance is done by means of an outer shim type system, in which valve adjusting shims are located above the valve lifters. This permits replacement of the shims without removal of the camshafts.

The resin timing belt cover is made in 2 pieces.

Pistons are made of high temperature-resistant aluminum alloy, and depressions are built into the piston head to prevent interference with valves.

Piston pins are the full-floating type, with the pins fastened to neither the piston boss nor the connecting rods. Instead, snap rings are fitted on both ends of the pins, preventing the pins from falling out.

The No. 1 compression ring is made of stainless steel and the No. 2 compression ring is made of cast iron. The oil ring is made of a combination of stainless steel. The outer diameter of each piston ring is slightly larger than the diameter of the piston and the flexibility of the rings allows them to hug the cylinder walls when they are mounted on the piston. Compression rings No. 1 and No. 2 work to prevent the leakage of gas from the cylinder and the oil ring works to scrape oil off the cylinder walls to prevent it from entering the combustion chamber.

The cylinder block is made of cast iron. It has 6 cylinders which are approximately 1.6 times the length of the piston stroke. The top of the cylinders is shut off by the cylinder head and the lower end of the cylinders becomes the crankcase, in which the crankshaft is installed. In addition, the cylinder block contains a water jacket through which coolant is pumped to cool the cylinders.

The oil pan is bolted to the bottom of the cylinder block. The oil pan is an oil reservoir made of pressed steel sheet. A dividing plate is included inside the oil pan to keep sufficient oil in the bottom of the pan even when the vehicle is tilted. This dividing plate also prevents the oil from making waves when the vehicle is stopped suddenly and thus shifting the oil away from the oil pump suction pipe.

TROUBLESHOOTING

Problem	Possible cause	Remedy	Page
Engine overheats	Cooling system faulty	Troubleshoot cooling system	CO-4
	Incorrect ignition timing	Reset timing	IG-20
Engine will not crank or cranks slowly	Starting system faulty	Troubleshoot starting system	ST-2
Engine will not start/ hard to start (cranks OK)	Vacuum leaks • PCV hoses • EGR valve • Intake manifold • Air intake chamber • Throttle body • ISC valve	Repair as necessary	
	Pulling in air between air flow meter and throttle body	Repair as necessary	
	Ignition problems • Ignition coil • Igniter • (7M-GE) Distributor (7M-GTE) Cam position sensor	Perform spark test	IG-5, 10
	High-tension cord disconnected or broken	Inspect cord	IG-6, 11
	No fuel supply to injector • No fuel in tank • Fuel pump not working • Fuel filter clogged • Fuel line clogged or leaking	Troubleshoot EFI system	FI-10
	EFI system problems	Repair as necessary	
	ISC system problem	Check ISC system	FI-106
	Spark plugs faulty	Inspect plugs	IG-7
	Low compression	Check compression	EM-20, 21
Rough idle, stalls or misses	Vacuum leaks • PCV hoses • EGR valve • Intake manifold • Air intake chamber • Throttle body • ISC valve	Repair as necessary	
	Pulling in air between air flow meter and throttle body		
	Incorrect idle speed	Check ISC system	FI-106
	Incorrect ignition timing	Reset timing	IG-20
	Ignition problems • Ignition coil • Igniter • (7M-GE) Distributor (7M-GTE) Cam position sensor	Perform spark test	IG-5, 10
	High-tension cord faulty	Inspect cord	IG-6, 11
	EFI system problems	Repair as necessary	

TROUBLESHOOTING (Cont'd)

Problem	Possible cause	Remedy	Page
Rough idle, stalls or misses (cont'd)	Spark plugs faulty	Inspect plugs	IG-7
	Engine overheats	Check cooling system	CO-4
	Low compression	Check compression	EM-20, 21
Engine hesitates/ poor acceleration	Vacuum leaks • PCV hoses • EGR valve • Intake manifold • Air intake chamber • Throttle body • ISC valve	Repair as necessary	
	Pulling in air between air flow meter and throttle body	Repair as necessary	
	Incorrect ignition timing	Reset timing	IG-20
	Emission control system problem (cold engine) • EGR system always on	Check EGR system	EC-12, 16
	High-tension cord faulty	Inspect cord	IG-6, 11
	Fuel system clogged	Check fuel system	FI-70
	Air cleaner clogged	Check air cleaner	MA-5
	EFI system problems	Repair as necessary	
	Spark plugs faulty	Inspect plugs	IG-7
	Engine overheats	Check cooling system	CO-4
	Low compression	Check compression	EM-20, 21
Engine diesels (runs after ignition switch is turned off)	EFI system problems	Repair as necessary	
Muffler explosion (after fire) on deceleration only	Deceleration fuel cut system always off	Check EFI (fuel cut) system	FI-124
Muffler explosion (after fire) all the time	Air cleaner clogged	Check air cleaner	MA-5
	EFI system problem	Repair as necessary	
	Incorrect ignition timing	Reset timing	IG-20
Engine backfires	Vacuum leak • PCV hoses • EGR valve • Intake manifold • Air intake chamber • Throttle body • ISC valve	Check hoses and repair as necessary	
	Pulling in air between air flow meter and throttle body	Repair as necessary	
	EFI system problem	Repair as necessary	
	Insufficient fuel flow	Troubleshoot fuel system	
	Incorrect ignition timing	Reset timing	IG-20
	Carbon deposits in combustion chambers	Inspect cylinder head	EM-32

TROUBLESHOOTING (Cont'd)

Problem	Possible cause	Remedy	Page
Excessive oil consumption	Oil leak	Repair as necessary	LU-7
	PCV line clogged	Check PCV system	EC-5
	Piston rings worn or damaged	Check rings	EM-63
	Valve stem and guide worn	Check valves	EM-32
	Valve stem seal worn	Check seals	EM-32
Poor fuel economy	Fuel leak	Repair as necessary	
	Air cleaner clogged	Check air cleaner	MA-5
	Incorrect ignition timing	Reset timing	IG-20
	EFI system problems • Injector faulty • Deceleration fuel cut system faulty	Repair as necessary	
	Idle speed too high	Check ISC system	FI-106
	Spark plugs faulty	Inspect plugs	IG-7
	EGR system always on	Check EGR system	EC-12, 16
	Low compression	Check compression	EM-20, 21
	Tires improperly inflated	Inflate tires to proper pressure	
	Clutch slips	Troubleshoot clutch	
	Brakes drag	Troubleshoot brakes	
Unpleasant odor	Incorrect idle speed	Check ISC system	FI-106
	Incorrect ignition timing	Reset timing	IG-20
	Vacuum leaks • PCV hoses • EGR valve • Intake manifold • Air intake chamber • Throttle body	Repair as necessary	
	EFI system problems	Repair as necessary	

ENGINE TUNE-UP

INSPECTION OF ENGINE COOLANT

(See page CO-5)

INSPECTION OF ENGINE OIL

(See page LU-4)

INSPECTION OF AIR FILTER

(See page MA-5)

INSPECTION OF BATTERY

(See page CH-2)

INSPECTION OF HIGH-TENSION CORDS

(See pages IG-6, 11)

INSPECTION OF SPARK PLUGS

(See page IG-7)

INSPECTION OF DRIVE BELTS

(See page MA-4)

INSPECTION OF IGNITION TIMING

(See page IG-20)

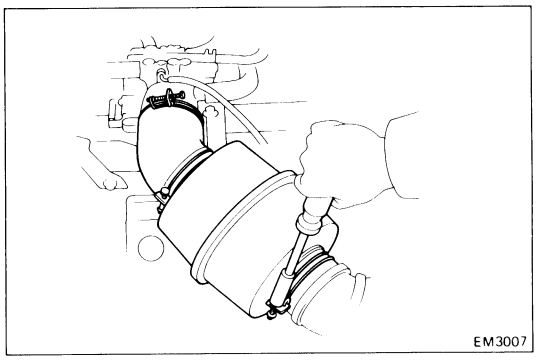

INSPECTION AND ADJUSTMENT OF VALVE CLEARANCE

HINT: Check and adjust the valve clearance while the engine is cold.

(7M-GE)

1. **DRAIN COOLANT**
   (See page CO-5)

2. **REMOVE NO. 1 AIR CLEANER HOSE WITH AIR CONNECTOR PIPE**

3. **REMOVE AIR INTAKE CONNECTOR**
   (a) Disconnect following cables:
   - Cruise control cable
   - Accelerator cable
   - (A/T)
     Throttle cable

   (b) Remove the PCV pipe.

   (c) Disconnect the accelerator rod.

   (d) Disconnect the water by-pass hoses from the throttle body.

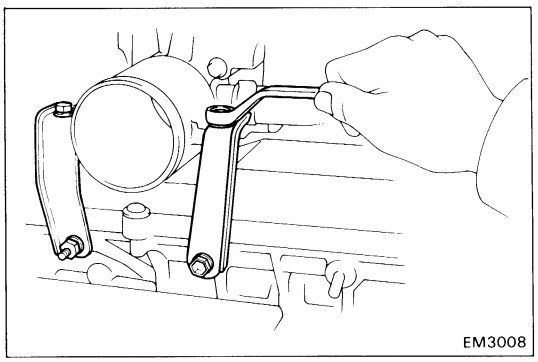

(e) Disconnect following hoses:
- VSV hose (for EGR)
- BVSV hose
- EGR vacuum modulator hoses
- No.7 air hose

(f) Disconnect the throttle position sensor connector.

(g) Remove the throttle body brackets.

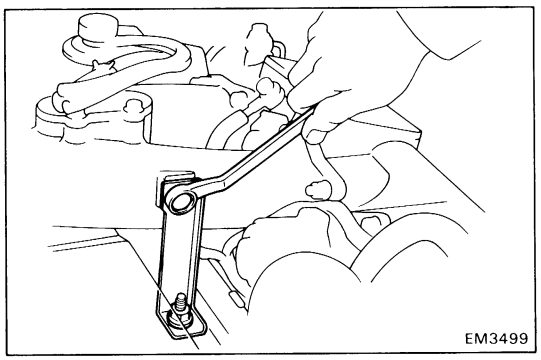

(h) Remove the air intake connector bracket mounting bolts.

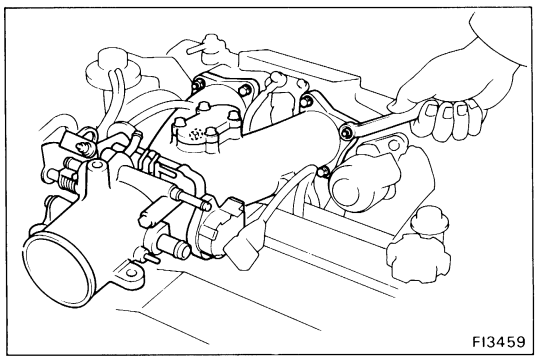

(i) Remove the four bolts, two nuts, air intake connector and gasket.

4. REMOVE CYLINDER HEAD COVERS
(See step 15 on page EM-39)

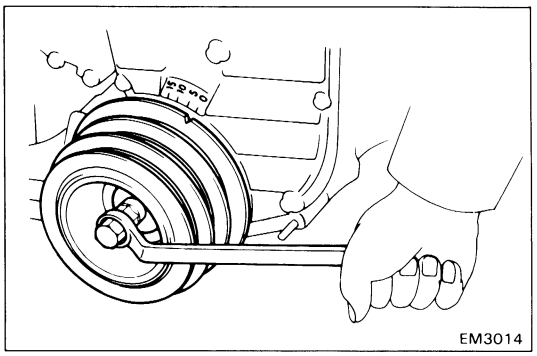

5. MEASURE VALVE CLEARANCE

(a) Set No.1 cylinder to TDC/compression.
- Turn the crankshaft pulley and align its groove with the "O" mark on the No.1 timing belt cover.
- Check that the valve lifters on the No.1 cylinder are loose and valve lifters on the No.6 cylinder are tight.

If not, turn the crankshaft pulley one complete revolution.

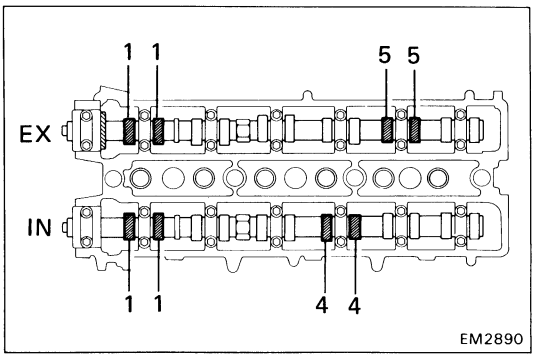

(b) Measure the clearance of No.1 (IN) and No.4 (IN) and No.1 (EX) and No.5 (EX) valves.
- Measure only those valves indicated in the figure.
- Record the measurements which are out of specification. They will be used later to determine the required replacement shims.

Valve clearance (Cold):

Intake	**0.15 — 0.25 mm (0.006 — 0.010 in.)**
Exhaust	**0.20 — 0.30 mm (0.008 — 0.012 in.)**

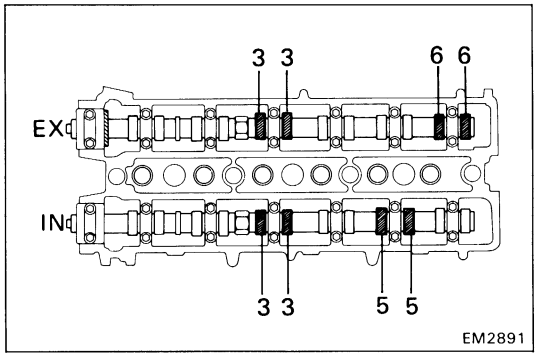

(c) Turn the crankshaft pulley 2/3 revolution (240°) and measure the clearance of No.3 (IN) and No.5 (IN) and No.3 (EX) and No.6 (EX) valves.
- Check that the valve lifters on the No.3 cylinder are loose.
- Measure only those valves indicated in the figure.
- Record the measurements which are out of specification. They will be used later to determine the required replacement shims.

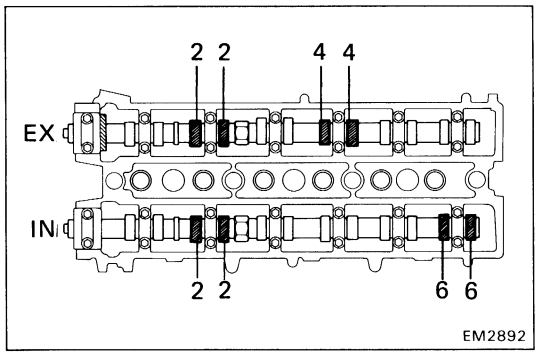

(d) Turn the crankshaft pulley 2/3 revolution (240°) and measure the clearance of No.2 (IN) and No.6 (IN) and No.2 (EX) and No.4 (EX) valves.
- Check that the valve lifters on the No.2 cylinder are loose.
- Measure only those valves indicated in the figure.
- Record the measurements which are out of specification. They will be used later to determine the required replacement shims.

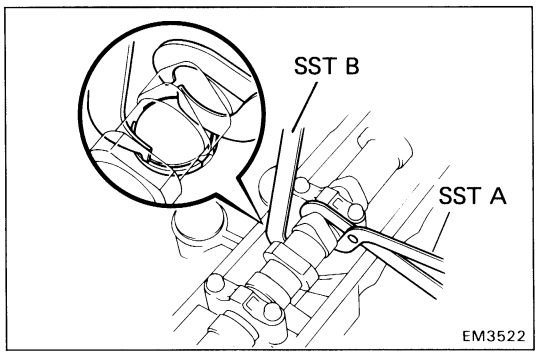

6. ADJUST VALVE CLEARANCE

(a) Remove the adjusting shim.
- Turn the crankshaft to position the cam lobe of the camshaft on the adjusting valve upward.
- Position the valve lifter notch so that the shim can be removed with a small screwdriver.
- Using SST (A), press down the valve lifter and place SST (B) between the camshaft and valve lifter. Remove SST (A).

SST 09248-55010

HINT: For easy removal of the shim, when positioning SST (B), set it on the lifter so there is space enough to be able to remove the shim.

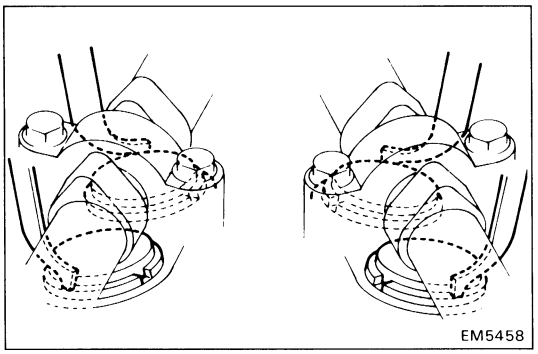

- Remove the adjusting shim with a small screwdriver and magnetic finger.

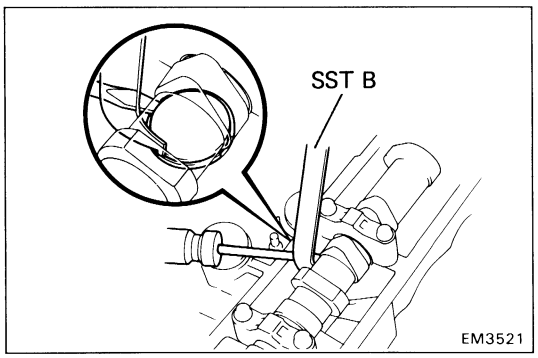

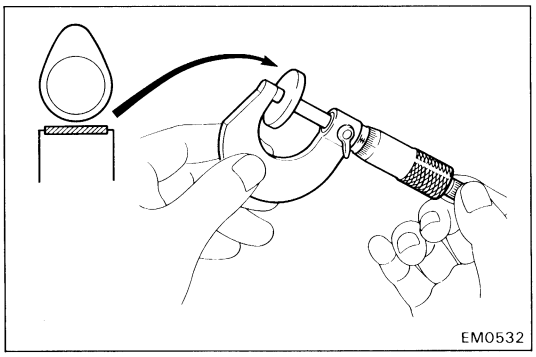

(b) Determine the replacement shim size by using the following (Formula or Chart).
- Using a micrometer, measure the thickness of the shim which was removed.
- Calculate the thickness of the new shim so the valve clearance comes within specified value.

T .....Thickness of shim used
A .....Valve clearance measured
N .....Thickness of shim new

Intake side: N = T + [A − 0.20 mm (0.0079 in.)]
Exhaust side: N = T + [A − 0.25 mm (0.0098 in.)]

- Select a new shim with a thickness as close as possible to the calculated value.

HINT: Shims are available in 17 sizes, in increments of 0.050 mm (0.0020 in.), from 2.500 mm (0.0984 in.) to 3.300 mm (0.1299 in.).

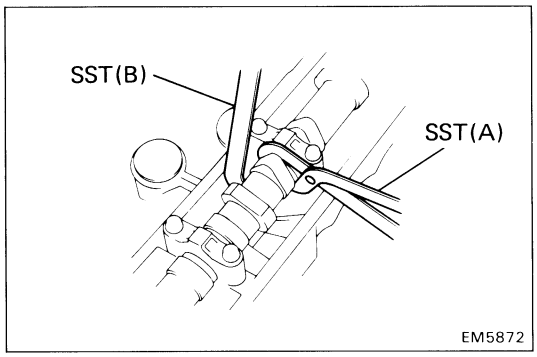

(c) Install the new adjusting shim.
- Place the new adjusting shim on the valve lifter.
- Using SST (A), press down the valve lifter and remove SST (B).

SST 09248-55010

(d) Recheck the valve clearance.

7. INSTALL CYLINDER HEAD COVERS
(See step 4 on pages EM-55, 56)

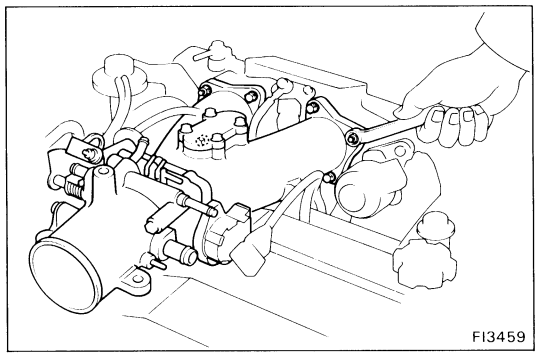

8. INSTALL AIR INTAKE CONNECTOR

(a) Install a new gasket and air intake connector with the four bolts and two nuts.

Torque: 180 kg-cm (13 ft-lb, 18 N·m)

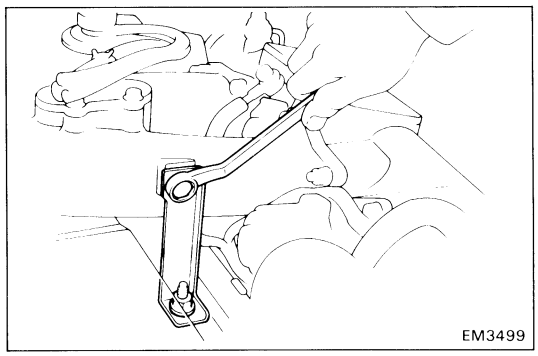

(b) Install the air intake connector bracket mounting bolts.

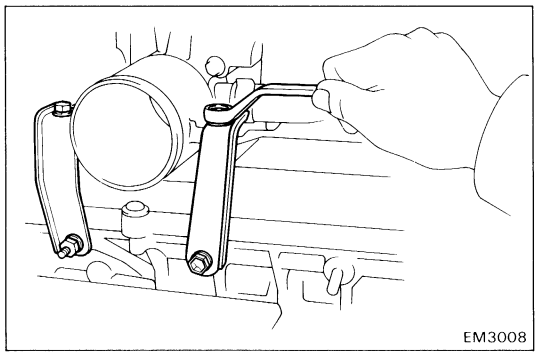

(c) Install the throttle body brackets.

(d) Connect the throttle position sensor connector.

(e) Connect following hoses:
- No. 7 air hose
- EGR vacuum modulator hoses
- BVSV hose
- VSV hose (for EGR)

(f) Connect the water by-pass hoses.

(g) Connect the accelerator connecting rod.

(h) Install the PCV pipe.

(i) Connect following cables:
- (A/T)
  Throttle cable
- Accelerator cable
- Cruise control cable

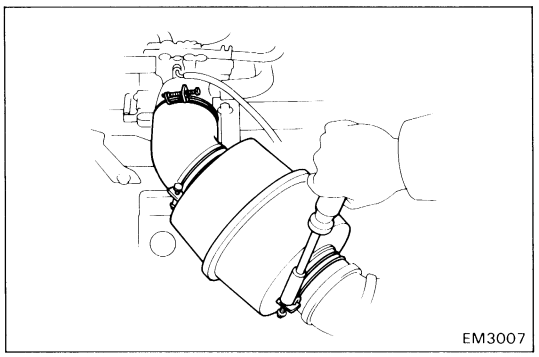

9. INSTALL NO. 1 AIR CLEANER HOSE WITH AIR CONNECTOR PIPE

10. FILL WITH COOLANT
(See page CO-5)

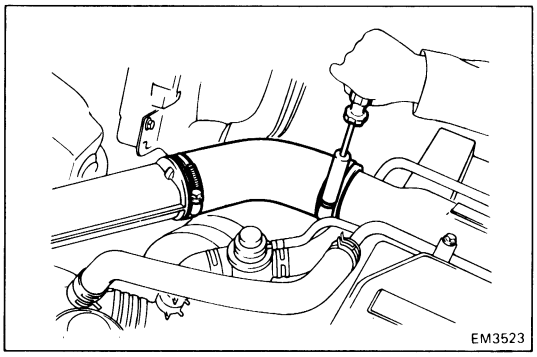

(7M-GTE)

1. REMOVE NO.1 AIR CLEANER HOSE

2. DISCONNECT FOLLOWING CABLES AND ROD:

(a) Accelerator link w/ cable

(b) Accelerator rod

(c) (A/T)
Throttle cable

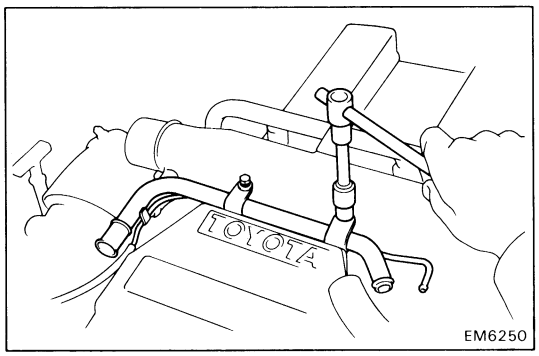

3. REMOVE ISC PIPE

(a) Disconnect the six hoses from ISC pipe.

(b) Remove the two bolts and ISC pipe.

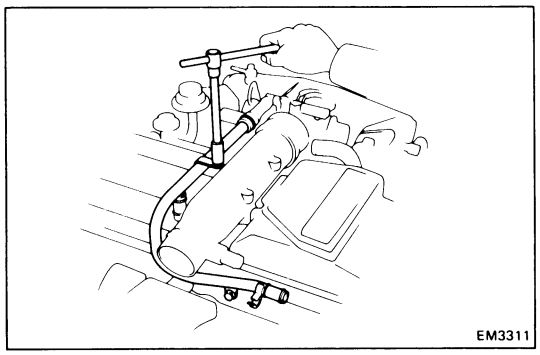

4. REMOVE PCV PIPE WITH HOSES

(a) Disconnect the oxygen sensor wire from the two clamps.

(b) Disconnect the No.4 PCV hose from the PCV pipe.

(c) Remove the two bolts.

(d) Disconnect the PCV pipe with hoses from the cylinder head covers and throttle body.

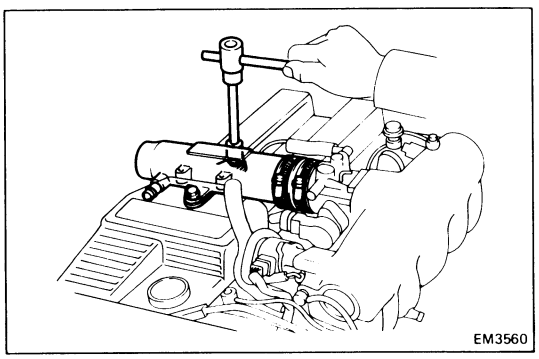

5. REMOVE INTAKE AIR CONNECTOR

(a) Disconnect the air valve hose from intake air connector.

(b) Loosen the clamp and remove the two bolt.

(c) Remove the intake air connector.

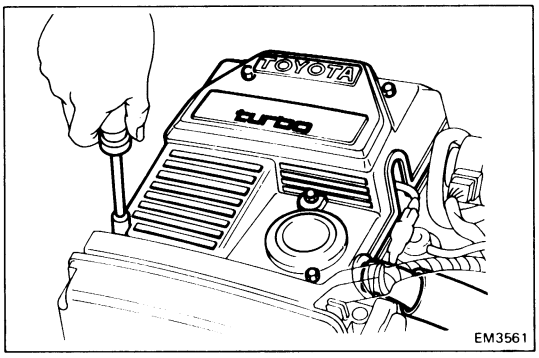

6. REMOVE IGNITION COIL COVER

(a) Remove the oil filler cap.

(b) Remove the five nuts and ignition coil cover.

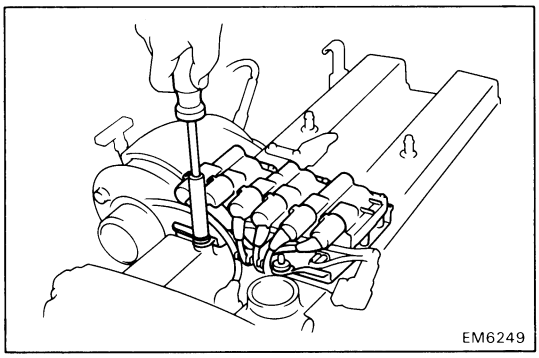

7. REMOVE IGNITION COIL WITH BRACKET

(a) Disconnect the connector and ground strap.

(b) Remove the nut.

(c) Remove the No.1 and No.2 high-tension cords from ignition coil and clamp.

(d) Remove the ignition coil with bracket and high-tension cords.

(e) Remove the No.1 and No.2 high-tension cords from spark plugs.

8. REMOVE CYLINDER HEAD COVERS

(a) Remove the accelerator link.

(b) Disconnect the No.3 PCV hose.

(c) Remove the cylinder head covers.

9. MEASURE VALVE CLEARANCE
(See step 5 on pages EM-8, 9)

10. ADJUST VALVE CLEARANCE
(See step 6 on pages EM-9, 10)

11. RECHECK VALVE CLEARANCE

12. INSTALL CYLINDER HEAD COVERS
(See step 4 on pages EM-55, 56)

13. INSTALL IGNITION COIL WITH BRACKET

(a) Install the No.1 and No.2 high-tension cords to spark plugs.

(b) Install the ignition coil with bracket and high-tension cords.
(See page IG-13)

(c) Install the No.1 and No.2 high-tension cords to ignition coil and clamp.

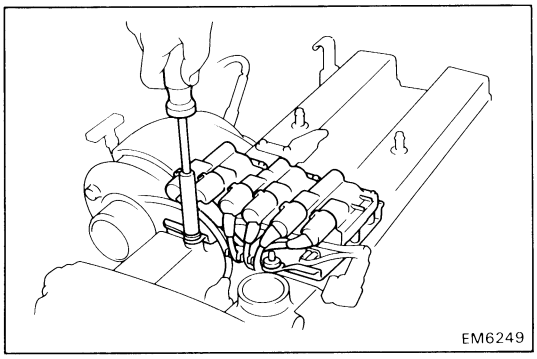

(d) Install and torque the nut.

Torque: 55 kg-cm (48 in-lb, 5.4 N·m)

HINT: Do not over tighten the nut.

(e) Connect the ground strap and connector.

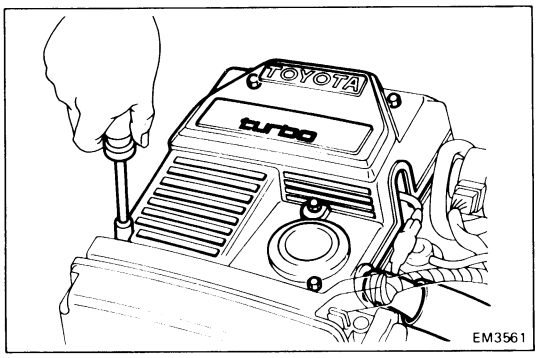

14. INSTALL IGNITION COIL COVER

(a) Install the ignition coil cover with five nuts.

(b) Install the oil filler cap.

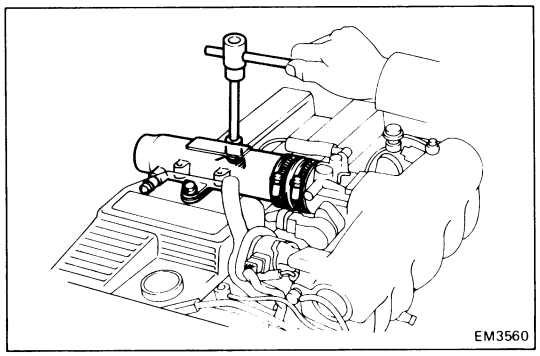

15. INSTALL INTAKE AIR CONNECTOR

(a) Install the intake air connector to throttle body.

(b) Install and tighten the two bolts.

(c) Tighten the clamp.

(d) Connect the air valve hose to intake air connector.

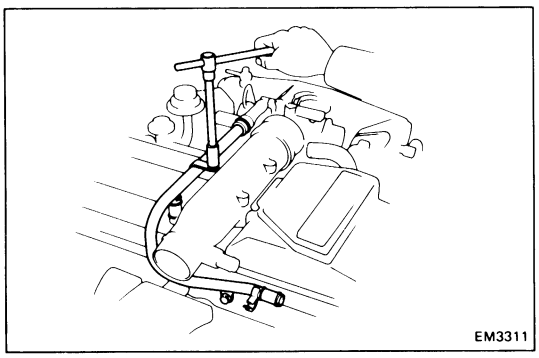

16. INSTALL PCV PIPE WITH HOSES

(a) Install the PCV pipe with hoses to throttle body and cylinder head covers.

(b) Install and tighten the two bolts.

(c) Connect the No.4 PCV hose to the PCV pipe.

(d) Connect the oxygen sensor wire to the two clamps.

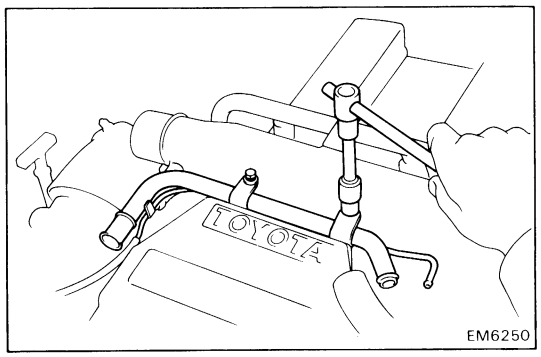

17. INSTALL ISC PIPE

(a) Install the ISC pipe with two bolts.

(b) Connect the six hoses to ISC pipe.

18. CONNECT FOLLOWING CABLES AND ROD:

(a) (A/T)
Throttle cable

(b) Accelerator rod

(c) Accelerator link w/ cable

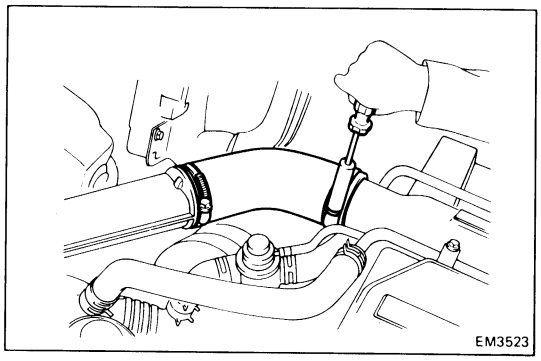

19. INSTALL NO.1 AIR CLEANER HOSE

Adjusting Shim Selection Chart

INTAKE

Measured Clearance (mm)	Installed Shim Thickness (mm)																																																							
	2.500	2.525	2.550	2.575	2.600	2.620	2.625	2.640	2.650	2.660	2.675	2.680	2.700	2.720	2.725	2.740	2.750	2.760	2.775	2.780	2.800	2.820	2.825	2.840	2.850	2.860	2.875	2.880	2.900	2.920	2.925	2.940	2.950	2.960	2.975	2.980	3.000	3.020	3.025	3.040	3.050	3.060	3.075	3.080	3.100	3.120	3.125	3.140	3.150	3.160	3.175	3.180	3.200	3.225	3.250	3.275	3.300
0.000 - 0.009											02	02	02	04	04	04	04	04	06	06	06	08	08	08	08	08	10	10	10	12	12	12	12	12	14	14	14	16	16	16	16	16	18	18	18	20	20	20	20	20	22	22	22	24	24	26	26
0.010 - 0.025										02	02	02	02	04	04	04	04	06	06	06	06	08	08	08	08	10	10	10	10	12	12	12	12	14	14	14	14	16	16	16	16	18	18	18	18	20	20	20	20	22	22	22	22	24	24	26	26
0.026 - 0.029									02	02	02	02	04	04	04	04	06	06	06	06	08	08	08	08	10	10	10	10	12	12	12	12	14	14	14	14	16	16	16	16	18	18	18	18	20	20	20	20	22	22	22	22	24	24	26	26	28
0.030 - 0.040								02	02	02	02	02	04	04	04	04	06	06	06	06	08	08	08	08	10	10	10	10	12	12	12	12	14	14	14	14	16	16	16	16	18	18	18	18	20	20	20	20	22	22	22	22	24	24	26	26	28
0.041 - 0.050								02	02	02	02	02	04	04	04	06	06	06	06	06	08	08	08	10	10	10	10	10	12	12	12	14	14	14	14	14	16	16	16	18	18	18	18	18	20	20	20	22	22	22	22	22	24	24	26	26	28
0.051 - 0.070						02	02	02	02	02	04	04	04	06	06	06	06	06	08	08	08	10	10	10	10	10	12	12	12	14	14	14	14	14	16	16	16	18	18	18	18	18	20	20	20	22	22	22	22	22	24	24	24	26	26	28	28
0.071 - 0.075					02	02	02	02	02	04	04	04	04	06	06	06	06	08	08	08	08	10	10	10	10	12	12	12	12	14	14	14	14	16	16	16	16	18	18	18	18	20	20	20	20	22	22	22	22	24	24	24	24	26	26	28	28
0.076 - 0.090					02	02	02	02	04	04	04	04	06	06	06	06	08	08	08	08	10	10	10	10	12	12	12	12	14	14	14	14	16	16	16	16	18	18	18	18	20	20	20	20	22	22	22	22	24	24	24	24	26	26	28	28	30
0.091 - 0.100					02	02	02	04	04	04	04	04	06	06	06	08	08	08	08	08	10	10	10	12	12	12	12	12	14	14	14	16	16	16	16	16	18	18	18	20	20	20	20	20	22	22	22	24	24	24	24	24	26	26	28	28	30
0.101 - 0.120				02	02	04	04	04	04	04	06	06	06	08	08	08	08	08	10	10	10	12	12	12	12	12	14	14	14	16	16	16	16	16	18	18	18	20	20	20	20	20	22	22	22	24	24	24	24	24	26	26	26	28	28	30	30
0.121 - 0.125			02	02	02	04	04	04	04	06	06	06	06	08	08	08	08	10	10	10	10	12	12	12	12	14	14	14	14	16	16	16	16	18	18	18	18	20	20	20	20	22	22	22	22	24	24	24	24	26	26	26	26	28	28	30	30
0.126 - 0.140			02	02	04	04	04	04	06	06	06	06	08	08	08	08	10	10	10	10	12	12	12	12	14	14	14	14	16	16	16	16	18	18	18	18	20	20	20	20	22	22	22	22	24	24	24	24	26	26	26	26	28	28	30	30	32
0.141 - 0.149			02	02	04	04	04	06	06	06	06	06	08	08	08	10	10	10	10	10	12	12	12	14	14	14	14	14	16	16	16	18	18	18	18	18	20	20	20	22	22	22	22	22	24	24	24	26	26	26	26	26	28	28	30	30	32
0.150 - 0.250																																																									
0.251 - 0.270	04	06	06	08	08	10	10	10	10	10	12	12	12	14	14	14	14	14	16	16	16	18	18	18	18	18	20	20	20	22	22	22	22	22	24	24	24	26	26	26	26	26	28	28	28	30	30	30	30	30	32	32	32	34	34		
0.271 - 0.275	04	06	06	08	08	10	10	10	10	12	12	12	12	14	14	14	14	16	16	16	16	18	18	18	18	20	20	20	20	22	22	22	22	24	24	24	24	26	26	26	26	28	28	28	28	30	30	30	30	32	32	32	32	34	34		
0.276 - 0.290	06	06	08	08	10	10	10	10	12	12	12	12	14	14	14	14	16	16	16	16	18	18	18	18	20	20	20	20	22	22	22	22	24	24	24	24	26	26	26	26	28	28	28	28	30	30	30	30	32	32	32	32	34	34			
0.291 - 0.300	06	06	08	08	10	10	10	12	12	12	12	12	14	14	14	16	16	16	16	16	18	18	18	20	20	20	20	20	22	22	22	24	24	24	24	24	26	26	26	28	28	28	28	28	30	30	30	32	32	32	32	32	34	34			
0.301 - 0.320	06	08	08	10	10	12	12	12	12	12	14	14	14	16	16	16	16	16	18	18	18	20	20	20	20	20	22	22	22	24	24	24	24	24	26	26	26	28	28	28	28	28	30	30	30	32	32	32	32	32	34	34	34				
0.321 - 0.325	06	08	08	10	10	12	12	12	12	14	14	14	14	16	16	16	16	18	18	18	18	20	20	20	20	22	22	22	22	24	24	24	24	26	26	26	26	28	28	28	28	30	30	30	30	32	32	32	32	34	34	34	34				
0.326 - 0.340	08	08	10	10	12	12	12	12	14	14	14	14	16	16	16	16	18	18	18	18	20	20	20	20	22	22	22	22	24	24	24	24	26	26	26	26	28	28	28	28	30	30	30	30	32	32	32	32	34	34	34	34					
0.341 - 0.350	08	08	10	10	12	12	12	14	14	14	14	14	16	16	16	18	18	18	18	18	20	20	20	22	22	22	22	22	24	24	24	26	26	26	26	26	28	28	28	30	30	30	30	30	32	32	32	34	34	34	34						
0.351 - 0.370	08	10	10	12	12	14	14	14	14	14	16	16	16	18	18	18	18	18	20	20	20	22	22	22	22	22	24	24	24	26	26	26	26	26	28	28	28	30	30	30	30	30	32	32	32	34	34	34	34	34							
0.371 - 0.375	08	10	10	12	12	14	14	14	14	16	16	16	16	18	18	18	18	20	20	20	20	22	22	22	22	24	24	24	24	26	26	26	26	28	28	28	28	30	30	30	30	32	32	32	32	34	34	34	34								
0.376 - 0.390	10	10	12	12	14	14	14	14	16	16	16	16	18	18	18	18	20	20	20	20	22	22	22	22	24	24	24	24	26	26	26	26	28	28	28	28	30	30	30	30	32	32	32	32	34	34	34	34									
0.391 - 0.400	10	10	12	12	14	14	14	16	16	16	16	16	18	18	18	20	20	20	20	20	22	22	22	24	24	24	24	24	26	26	26	28	28	28	28	28	30	30	30	32	32	32	32	32	34	34	34										
0.401 - 0.420	10	12	12	14	14	16	16	16	16	16	18	18	18	20	20	20	20	20	22	22	22	24	24	24	24	24	26	26	26	28	28	28	28	28	30	30	30	32	32	32	32	32	34	34	34												
0.421 - 0.425	10	12	12	14	14	16	16	16	16	18	18	18	18	20	20	20	20	22	22	22	22	24	24	24	24	26	26	26	26	28	28	28	28	30	30	30	30	32	32	32	32	34	34	34	34												
0.426 - 0.440	12	12	14	14	16	16	16	16	18	18	18	18	20	20	20	20	22	22	22	22	24	24	24	24	26	26	26	26	28	28	28	28	30	30	30	30	32	32	32	32	34	34	34	34													
0.441 - 0.450	12	12	14	14	16	16	16	18	18	18	18	18	20	20	20	22	22	22	22	22	24	24	24	26	26	26	26	26	28	28	28	30	30	30	30	30	32	32	32	34	34	34	34	34													
0.451 - 0.470	12	14	14	16	16	18	18	18	18	18	20	20	20	22	22	22	22	22	24	24	24	26	26	26	26	26	28	28	28	30	30	30	30	30	32	32	32	34	34	34	34	34															
0.471 - 0.475	12	14	14	16	16	18	18	18	18	20	20	20	20	22	22	22	22	24	24	24	24	26	26	26	26	28	28	28	28	30	30	30	30	32	32	32	32	34	34	34	34																
0.476 - 0.490	14	14	16	16	18	18	18	18	20	20	20	20	22	22	22	22	24	24	24	24	26	26	26	26	28	28	28	28	30	30	30	30	32	32	32	32	34	34	34	34																	
0.491 - 0.500	14	14	16	16	18	18	18	20	20	20	20	20	22	22	22	24	24	24	24	24	26	26	26	28	28	28	28	28	30	30	30	32	32	32	32	32	34	34	34																		
0.501 - 0.520	14	16	16	18	18	20	20	20	20	20	22	22	22	24	24	24	24	24	26	26	26	28	28	28	28	28	30	30	30	32	32	32	32	32	34	34	34																				
0.521 - 0.525	14	16	16	18	18	20	20	20	20	22	22	22	22	24	24	24	24	26	26	26	26	28	28	28	28	30	30	30	30	32	32	32	32	34	34	34	34																				
0.526 - 0.540	16	16	18	18	20	20	20	20	22	22	22	22	24	24	24	24	26	26	26	26	28	28	28	28	30	30	30	30	32	32	32	32	34	34	34	34																					
0.541 - 0.550	16	16	18	18	20	20	20	22	22	22	22	22	24	24	24	26	26	26	26	26	28	28	28	30	30	30	30	30	32	32	32	34	34	34	34	34																					
0.551 - 0.570	16	18	18	20	20	22	22	22	22	22	24	24	24	26	26	26	26	26	28	28	28	30	30	30	30	30	32	32	32	34	34	34	34	34																							
0.571 - 0.575	16	18	18	20	20	22	22	22	22	24	24	24	24	26	26	26	26	28	28	28	28	30	30	30	30	32	32	32	32	34	34	34	34																								
0.576 - 0.590	18	18	20	20	22	22	22	22	24	24	24	24	26	26	26	26	28	28	28	28	30	30	30	30	32	32	32	32	34	34	34	34																									
0.591 - 0.600	18	18	20	20	22	22	22	24	24	24	24	24	26	26	26	28	28	28	28	28	30	30	30	32	32	32	32	32	34	34	34																										
0.601 - 0.620	18	20	20	22	22	24	24	24	24	24	26	26	26	28	28	28	28	28	30	30	30	32	32	32	32	32	34	34	34																												
0.621 - 0.625	18	20	20	22	22	24	24	24	24	26	26	26	26	28	28	28	28	30	30	30	30	32	32	32	32	34	34	34	34																												
0.626 - 0.640	20	20	22	22	24	24	24	24	26	26	26	26	28	28	28	28	30	30	30	30	32	32	32	32	34	34	34	34																													
0.641 - 0.650	20	20	22	22	24	24	24	26	26	26	26	26	28	28	28	30	30	30	30	30	32	32	32	34	34	34	34	34																													
0.651 - 0.670	20	22	22	24	24	26	26	26	26	26	28	28	28	30	30	30	30	30	32	32	32	34	34	34	34	34																															
0.671 - 0.675	20	22	22	24	24	26	26	26	26	28	28	28	28	30	30	30	30	32	32	32	32	34	34	34	34																																
0.676 - 0.690	22	22	24	24	26	26	26	26	28	28	28	28	30	30	30	30	32	32	32	32	34	34	34	34																																	
0.691 - 0.700	22	22	24	24	26	26	26	28	28	28	28	28	30	30	30	32	32	32	32	32	34	34	34																																		
0.701 - 0.720	22	24	24	26	26	28	28	28	28	28	30	30	30	32	32	32	32	32	34	34	34																																				
0.721 - 0.725	22	24	24	26	26	28	28	28	28	30	30	30	30	32	32	32	32	34	34	34	34																																				
0.726 - 0.740	24	24	26	26	28	28	28	28	30	30	30	30	32	32	32	32	34	34	34	34																																					
0.741 - 0.750	24	24	26	26	28	28	28	30	30	30	30	30	32	32	32	34	34	34	34																																						
0.751 - 0.770	24	26	26	28	28	30	30	30	30	30	32	32	32	34	34	34	34	34																																							
0.771 - 0.775	24	26	26	28	28	30	30	30	30	32	32	32	32	34	34	34	34																																								
0.776 - 0.790	26	26	28	28	30	30	30	30	32	32	32	32	34	34	34	34																																									
0.791 - 0.800	26	26	28	28	30	30	30	32	32	32	32	32	34	34	34																																										
0.801 - 0.820	26	28	28	30	30	32	32	32	32	32	34	34	34																																												
0.821 - 0.825	26	28	28	30	30	32	32	32	32	34	34	34	34																																												
0.826 - 0.840	28	28	30	30	32	32	32	32	34	34	34	34																																													
0.841 - 0.850	28	28	30	30	32	32	32	34	34	34	34	34																																													
0.851 - 0.870	28	30	30	32	32	34	34	34	34	34																																															
0.871 - 0.875	28	30	30	32	32	34	34	34	34																																																
0.876 - 0.890	30	30	32	32	34	34	34	34																																																	
0.891 - 0.900	30	30	32	32	34	34	34																																																		
0.901 - 0.925	30	32	32	34	34																																																				
0.926 - 0.950	32	32	34	34																																																					
0.951 - 0.975	32	34	34																																																						
0.976 - 1.000	34	34																																																							
1.001 - 1.025	34																																																								

Shim thicknesses mm (in.)

Shim No.	Thickness	Shim No.	Thickness
02	2.500 (0.0984)	20	2.950 (0.1161)
04	2.550 (0.1004)	22	3.000 (0.1181)
06	2.600 (0.1024)	24	3.050 (0.1201)
08	2.650 (0.1043)	26	3.100 (0.1220)
10	2.700 (0.1063)	28	3.150 (0.1240)
12	2.750 (0.1083)	30	3.200 (0.1260)
14	2.800 (0.1102)	32	3.250 (0.1280)
16	2.850 (0.1122)	34	3.300 (0.1299)
18	2.900 (0.1142)		

Intake valve clearance (cold):
0.15 – 0.25 mm (0.006 – 0.010 in.)

Example: **A 2.800 mm shim is installed and the measured clearance is 0.450 mm. Replace the 2.800 mm shim with shim No. 24 (3.050 mm).**

Adjusting Shim Selection Chart

EXHAUST

Measured Clearance (mm)	Installed Shim Thickness (mm)																																																							
	2.500	2.525	2.550	2.575	2.600	2.620	2.625	2.640	2.650	2.660	2.675	2.680	2.700	2.720	2.725	2.740	2.750	2.760	2.775	2.780	2.800	2.820	2.825	2.840	2.850	2.860	2.875	2.880	2.900	2.920	2.925	2.940	2.950	2.960	2.975	2.980	3.000	3.020	3.025	3.040	3.050	3.060	3.075	3.080	3.100	3.120	3.125	3.140	3.150	3.160	3.175	3.180	3.200	3.225	3.250	3.275	3.300
0.000 – 0.009														02	02	02	02	02	04	04	04	06	06	06	06	06	08	08	08	10	10	10	10	10	12	12	12	14	14	14	14	14	16	16	16	18	18	18	18	18	20	20	20	22	22	24	24
0.010 – 0.025														02	02	02	02	04	04	04	06	06	06	06	06	08	08	08	10	10	10	10	10	12	12	12	14	14	14	14	14	16	16	16	18	18	18	18	18	20	20	20	22	22	22	24	26
0.026 – 0.040													02	02	02	02	04	04	04	04	06	06	06	06	08	08	08	08	10	10	10	10	12	12	12	12	14	14	14	14	16	16	16	16	18	18	18	18	20	20	20	20	22	22	24	24	26
0.041 – 0.050												02	02	02	02	04	04	04	04	06	06	06	06	08	08	08	08	10	10	10	10	12	12	12	12	14	14	14	14	16	16	16	16	18	18	18	18	20	20	20	20	22	22	22	24	24	26
0.051 – 0.070											02	02	02	04	04	04	04	04	06	06	06	08	08	08	08	08	10	10	10	12	12	12	12	12	14	14	14	16	16	16	16	16	18	18	18	20	20	20	20	20	22	22	22	24	24	26	26
0.071 – 0.090									02	02	02	02	04	04	04	04	06	06	06	06	08	08	08	08	10	10	10	10	12	12	12	12	14	14	14	14	16	16	16	16	18	18	18	18	20	20	20	20	22	22	22	22	24	24	26	26	28
0.091 – 0.100								02	02	02	02	04	04	04	04	06	06	06	06	08	08	08	08	10	10	10	10	12	12	12	12	14	14	14	14	16	16	16	16	18	18	18	18	20	20	20	20	22	22	22	22	24	24	24	26	26	28
0.101 – 0.120						02	02	02	02	02	04	04	04	06	06	06	06	06	08	08	08	10	10	10	10	10	12	12	12	14	14	14	14	14	16	16	16	18	18	18	18	18	20	20	20	22	22	22	22	22	24	24	24	26	26	28	28
0.121 – 0.140					02	02	02	02	04	04	04	04	06	06	06	06	08	08	08	08	10	10	10	10	12	12	12	12	14	14	14	14	16	16	16	16	18	18	18	18	20	20	20	20	22	22	22	22	24	24	24	24	26	26	28	28	30
0.141 – 0.150					02	02	02	04	04	04	04	06	06	06	06	08	08	08	08	10	10	10	10	12	12	12	12	14	14	14	14	16	16	16	16	18	18	18	18	20	20	20	20	22	22	22	22	24	24	24	24	26	26	26	28	28	30
0.151 – 0.170				02	02	04	04	04	04	04	06	06	06	08	08	08	08	08	10	10	10	12	12	12	12	12	14	14	14	16	16	16	16	16	18	18	18	20	20	20	20	20	22	22	22	24	24	24	24	24	26	26	26	28	28	30	30
0.171 – 0.190			02	02	04	04	04	04	06	06	06	06	08	08	08	08	10	10	10	10	12	12	12	12	14	14	14	14	16	16	16	16	18	18	18	18	20	20	20	20	22	22	22	22	24	24	24	24	26	26	26	26	28	28	30	30	32
0.191 – 0.199			02	02	04	04	04	06	06	06	06	08	08	08	08	10	10	10	10	12	12	12	12	14	14	14	14	16	16	16	16	18	18	18	18	20	20	20	20	22	22	22	22	24	24	24	24	26	26	26	26	28	28	28	30	30	32
0.200 – 0.300																																																									
0.301 – 0.320	04	06	06	08	08	10	10	10	10	10	12	12	12	14	14	14	14	14	16	16	16	18	18	18	18	18	20	20	20	22	22	22	22	22	24	24	24	26	26	26	26	26	28	28	28	30	30	30	30	30	32	32	32	34	34		
0.321 – 0.325	04	06	06	08	08	10	10	10	10	12	12	12	12	14	14	14	14	16	16	16	16	18	18	18	18	20	20	20	20	22	22	22	22	24	24	24	24	26	26	26	26	28	28	28	28	30	30	30	30	32	32	32	32	34	34		
0.326 – 0.340	06	06	08	08	10	10	10	10	12	12	12	12	14	14	14	14	16	16	16	16	18	18	18	18	20	20	20	20	22	22	22	22	24	24	24	24	26	26	26	26	28	28	28	28	30	30	30	30	32	32	32	32	34	34			
0.341 – 0.350	06	06	08	08	10	10	10	12	12	12	12	12	14	14	14	16	16	16	16	16	18	18	18	20	20	20	20	20	22	22	22	24	24	24	24	24	26	26	26	28	28	28	28	28	30	30	30	32	32	32	32	32	34	34			
0.351 – 0.370	06	08	08	10	10	12	12	12	12	12	14	14	14	16	16	16	16	16	18	18	18	20	20	20	20	20	22	22	22	24	24	24	24	24	26	26	26	28	28	28	28	28	30	30	30	32	32	32	32	32	34	34	34				
0.371 – 0.375	06	08	08	10	10	12	12	12	12	14	14	14	14	16	16	16	16	18	18	18	18	20	20	20	20	22	22	22	22	24	24	24	24	26	26	26	26	28	28	28	28	30	30	30	30	32	32	32	32	34	34	34	34				
0.376 – 0.390	08	08	10	10	12	12	12	12	14	14	14	14	16	16	16	16	18	18	18	18	20	20	20	20	22	22	22	22	24	24	24	24	26	26	26	26	28	28	28	28	30	30	30	30	32	32	32	32	34	34	34	34					
0.391 – 0.400	08	08	10	10	12	12	12	14	14	14	14	14	16	16	16	18	18	18	18	18	20	20	20	22	22	22	22	22	24	24	24	26	26	26	26	26	28	28	28	30	30	30	30	30	32	32	32	34	34	34	34	34					
0.401 – 0.420	08	10	10	12	12	14	14	14	14	14	16	16	16	18	18	18	18	18	20	20	20	22	22	22	22	22	24	24	24	26	26	26	26	26	28	28	28	30	30	30	30	30	32	32	32	34	34	34	34	34							
0.421 – 0.425	08	10	10	12	12	14	14	14	14	16	16	16	16	18	18	18	18	20	20	20	20	22	22	22	22	24	24	24	24	26	26	26	26	28	28	28	28	30	30	30	30	32	32	32	32	34	34	34	34								
0.426 – 0.440	10	10	12	12	14	14	14	14	16	16	16	16	18	18	18	18	20	20	20	20	22	22	22	22	24	24	24	24	26	26	26	26	28	28	28	28	30	30	30	30	32	32	32	32	34	34	34	34									
0.441 – 0.450	10	10	12	12	14	14	14	16	16	16	16	16	18	18	18	20	20	20	20	20	22	22	22	24	24	24	24	24	26	26	26	28	28	28	28	28	30	30	30	32	32	32	32	32	34	34	34										
0.451 – 0.470	10	12	12	14	14	16	16	16	16	16	18	18	18	20	20	20	20	20	22	22	22	24	24	24	24	24	26	26	26	28	28	28	28	28	30	30	30	32	32	32	32	32	34	34	34												
0.471 – 0.475	10	12	12	14	14	16	16	16	16	18	18	18	18	20	20	20	20	22	22	22	22	24	24	24	24	26	26	26	26	28	28	28	28	30	30	30	30	32	32	32	32	34	34	34	34												
0.476 – 0.490	12	12	14	14	16	16	16	16	18	18	18	18	20	20	20	20	22	22	22	22	24	24	24	24	26	26	26	26	28	28	28	28	30	30	30	30	32	32	32	32	34	34	34	34													
0.491 – 0.500	12	12	14	14	16	16	16	18	18	18	18	18	20	20	20	22	22	22	22	22	24	24	24	26	26	26	26	26	28	28	28	30	30	30	30	30	32	32	32	34	34	34	34	34													
0.501 – 0.520	12	14	14	16	16	18	18	18	18	18	20	20	20	22	22	22	22	22	24	24	24	26	26	26	26	26	28	28	28	30	30	30	30	30	32	32	32	34	34	34	34	34															
0.521 – 0.525	12	14	14	16	16	18	18	18	18	20	20	20	20	22	22	22	22	24	24	24	24	26	26	26	26	28	28	28	28	30	30	30	30	32	32	32	32	34	34	34	34																
0.526 – 0.540	14	14	16	16	18	18	18	18	20	20	20	20	22	22	22	22	24	24	24	24	26	26	26	26	28	28	28	28	30	30	30	30	32	32	32	32	34	34	34	34																	
0.541 – 0.550	14	14	16	16	18	18	18	20	20	20	20	20	22	22	22	24	24	24	24	24	26	26	26	28	28	28	28	28	30	30	30	32	32	32	32	32	34	34	34																		
0.551 – 0.570	14	16	16	18	18	20	20	20	20	20	22	22	22	24	24	24	24	24	26	26	26	28	28	28	28	28	30	30	30	32	32	32	32	32	34	34	34																				
0.571 – 0.575	14	16	16	18	18	20	20	20	20	22	22	22	22	24	24	24	24	26	26	26	26	28	28	28	28	30	30	30	30	32	32	32	32	34	34	34	34																				
0.576 – 0.590	16	16	18	18	20	20	20	20	22	22	22	22	24	24	24	24	26	26	26	26	28	28	28	28	30	30	30	30	32	32	32	32	34	34	34	34																					
0.591 – 0.600	16	16	18	18	20	20	20	22	22	22	22	22	24	24	24	26	26	26	26	26	28	28	28	30	30	30	30	30	32	32	32	34	34	34	34	34																					
0.601 – 0.620	16	18	18	20	20	22	22	22	22	22	24	24	24	26	26	26	26	26	28	28	28	30	30	30	30	30	32	32	32	34	34	34	34	34																							
0.621 – 0.625	16	18	18	20	20	22	22	22	22	24	24	24	24	26	26	26	26	28	28	28	28	30	30	30	30	32	32	32	32	34	34	34	34																								
0.626 – 0.640	18	18	20	20	22	22	22	22	24	24	24	24	26	26	26	26	28	28	28	28	30	30	30	30	32	32	32	32	34	34	34	34																									
0.641 – 0.650	18	18	20	20	22	22	22	24	24	24	24	24	26	26	26	28	28	28	28	28	30	30	30	32	32	32	32	32	34	34	34																										
0.651 – 0.670	18	20	20	22	22	24	24	24	24	24	26	26	26	28	28	28	28	28	30	30	30	32	32	32	32	32	34	34	34																												
0.671 – 0.675	18	20	20	22	22	24	24	24	24	26	26	26	26	28	28	28	28	30	30	30	30	32	32	32	32	34	34	34	34																												
0.676 – 0.690	20	20	22	22	24	24	24	24	26	26	26	26	28	28	28	28	30	30	30	30	32	32	32	32	34	34	34	34																													
0.691 – 0.700	20	20	22	22	24	24	24	26	26	26	26	26	28	28	28	30	30	30	30	30	32	32	32	34	34	34	34	34																													
0.701 – 0.720	20	22	22	24	24	26	26	26	26	26	28	28	28	30	30	30	30	30	32	32	32	34	34	34	34	34																															
0.721 – 0.725	20	22	22	24	24	26	26	26	26	28	28	28	28	30	30	30	30	32	32	32	32	34	34	34	34																																
0.726 – 0.740	22	22	24	24	26	26	26	26	28	28	28	28	30	30	30	30	32	32	32	32	34	34	34	34																																	
0.741 – 0.750	22	22	24	24	26	26	26	28	28	28	28	28	30	30	30	32	32	32	32	32	34	34	34																																		
0.751 – 0.770	22	24	24	26	26	28	28	28	28	28	30	30	30	32	32	32	32	32	34	34	34																																				
0.771 – 0.775	22	24	24	26	26	28	28	28	28	30	30	30	30	32	32	32	32	34	34	34	34																																				
0.776 – 0.790	24	24	26	26	28	28	28	28	30	30	30	30	32	32	32	32	34	34	34	34																																					
0.791 – 0.800	24	24	26	26	28	28	28	30	30	30	30	30	32	32	32	34	34	34	34	34																																					
0.801 – 0.820	24	26	26	28	28	30	30	30	30	30	32	32	32	34	34	34	34	34																																							
0.821 – 0.825	24	26	26	28	28	30	30	30	30	32	32	32	32	34	34	34	34																																								
0.826 – 0.840	26	26	28	28	30	30	30	30	32	32	32	32	34	34	34	34																																									
0.841 – 0.850	26	26	28	28	30	30	30	32	32	32	32	32	34	34	34																																										
0.851 – 0.870	26	28	28	30	30	32	32	32	32	32	34	34	34																																												
0.871 – 0.875	26	28	28	30	30	32	32	32	32	34	34	34	34																																												
0.876 – 0.890	28	28	30	30	32	32	32	32	34	34	34	34																																													
0.891 – 0.900	28	28	30	30	32	32	32	34	34	34	34	34																																													
0.901 – 0.925	28	30	30	32	32	34	34	34	34																																																		
0.926 – 0.950	30	30	32	32	34	34	34																																																		
0.951 – 0.975	30	32	32	34	34																																																				
0.976 – 1.000	32	32	34	34																																																					
1.001 – 1.025	32	34	34																																																						
1.026 – 1.050	34	34																																																							
1.051 – 1.075	34																																																								

Shim thicknesses mm (in.)

Shim No.	Thickness	Shim No.	Thickness
02	2.500 (0.0984)	20	2.950 (0.1161)
04	2.550 (0.1004)	22	3.000 (0.1181)
06	2.600 (0.1024)	24	3.050 (0.1201)
08	2.650 (0.1043)	26	3.100 (0.1220)
10	2.700 (0.1063)	28	3.150 (0.1240)
12	2.750 (0.1083)	30	3.200 (0.1260)
14	2.800 (0.1102)	32	3.250 (0.1280)
16	2.850 (0.1122)	34	3.300 (0.1299)
18	2.900 (0.1142)		

Exhaust valve clearance (cold):
0.20 – 0.30 mm (0.008 – 0.012 in.)

Example: **A 2.800 mm shim is installed and the measured clearance is 0.450 mm. Replace the 2.800 mm shim with shim No. 22 (3.000 mm).**

IDLE AND/OR 2,500 RPM HC/CO CONCENTRATION CHECK METHOD

NOTE: This check is used only to determine whether or not the idle and/or 2,500 rpm HC/CO complies with regulations.

1. INITIAL CONDITIONS

(a) Engine at normal operating temperature

(b) Air cleaner installed

(c) All pipes and hoses of air induction system connected

(d) All accessories switched OFF

(e) All vacuum lines properly connected

HINT: All vacuum hoses for EGR systems, etc. should be properly connected.

(f) EFI system wiring connectors fully plugged

(g) Ignition timing set correctly

(h) Transmission in neutral

(i) Tachometer and HC/CO meter calibrated and at hand.

2. START ENGINE

3. RACE ENGINE AT 2,500 RPM FOR APPROX. 2 MINUTES

4. INSERT HC/CO METER TESTING PROBE INTO TAILPIPE AT LEAST 40 cm (1.3 ft)

5. CHECK HC/CO CONCENTRATION AT IDLE AND/OR 2,500 RPM

Complete the measuring within three minutes.

NOTE: When performing the 2 mode (2,500 rpm and idle) test, follow the measurement order prescribed by regulations.

If the HC/CO concentration at 2,500 rpm does not comply with regulations, try the following procedure.

Race the engine again at 2,500 rpm for approx. 1 minute, and quickly repeat steps 4 and 5 above. This may correct the problem.

Troubleshooting

If the HC/CO concentration does not comply with regulations, perform troubleshooting in the order given below.

1. Check oxygen sensor operation.
   (See page FI-119)
2. See the table below for possible causes, and then inspect and correct the applicable causes if necessary.

HC	CO	Symptoms	Causes
High	Normal	Rough idle	1. Faulty ignition: • Incorrect timing • Fouled, shorted or improperly gapped plugs • Open or crossed high-tension cords • Cracked distributor cap 2. Incorrect valve clearance 3. Leaky EGR valve 4. Leaky intake and exhaust valves 5. Leaky cylinder
High	Low	Rough idle (Fluctuating HC reading)	1. Vacuum leak: • Vacuum hose • EGR valve • Intake manifold (Air intake chamber) • Throttle body • ISC valve • Brake booster line 2. Lean mixture causing misfire
High	High	Rough idle (Black smoke from exhaust)	1. Restricted air filter 2. Faulty EFI system: • Faulty pressure regulator • Clogged fuel return line • Faulty air flow meter • Defective water temp. sensor • Defective air temp. sensor • Faulty ECU • Faulty injector • Faulty cold start injector • Faulty throttle position sensor

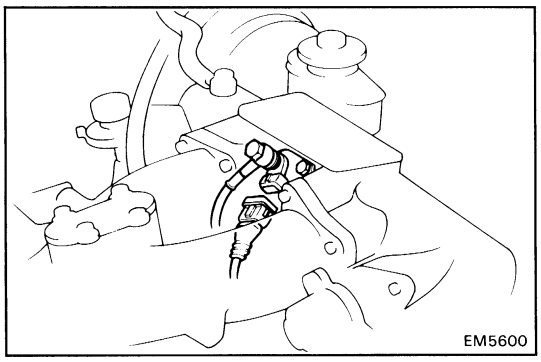
EM5600

COMPRESSION CHECK

HINT: If there is lack of power, excessive oil consumption or poor fuel economy, measure the cylinder compression pressure.

(7M-GE)

1. WARM UP ENGINE

2. DISCONNECT COLD START INJECTOR CONNECTOR

3. DISCONNECT HIGH-TENSION CORD FROM IGNITION COIL

4. REMOVE THROTTLE BODY

(a) Remove the PCV hose.

(b) Disconnect the water by-pass hoses and plug the hose end.

(c) Disconnect following hoses:
- VSV hose (for EGR)
- BVSV hose
- EGR vacuum modulator hoses
- No.7 air hose

(d) Disconnect the throttle position sensor connector.

(e) Remove the throttle body bracket.

(f) Remove the four bolts, throttle body and gasket.

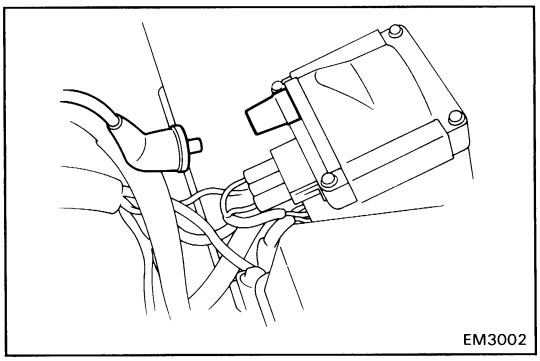
EM3002

5. REMOVE SPARK PLUGS

6. CHECK CYLINDER COMPRESSION PRESSURE

(a) Insert a compression gauge into the spark plug hole.

(b) While cranking the engine with the starter motor, measure the compression pressure.

HINT: Always use a fully charged battery to obtain engine speed of 250 rpm or more.

(c) Repeat steps (a) through (b) for each cylinder.

Compression pressure:
11.0 kg/cm² (156 psi, 1,079 kPa) or more

Minimum pressure:
9.0 kg/cm² (128 psi, 883 kPa)

Difference between each cylinder:
1.0 kg/cm² (14 psi, 98 kPa) or less

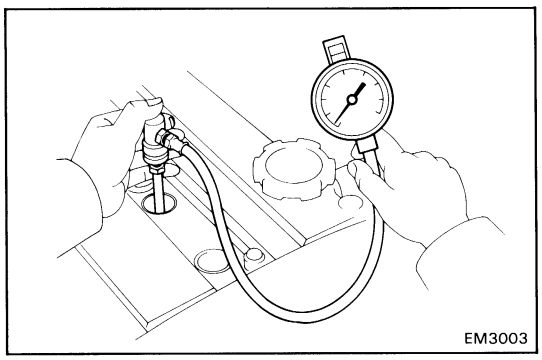
EM3003

(d) If cylinder compression in one or more cylinders is low, pour a small amount of engine oil into the cylinder through the spark plug hole and repeat steps (a) through (b) for the cylinder with low compression.
- If adding oil helps the compression, chances are that the piston rings and/or cylinder bore are worn or damaged.
- If pressure stays low, a valve may be sticking or seating improperly, or there may be leakage past the gasket.

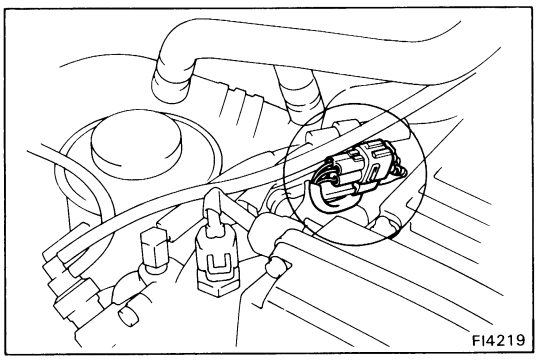

(7M-GTE)

1. **WARM UP ENGINE**

2. **DISCONNECT CAM POSITION SENSOR CONNECTOR**

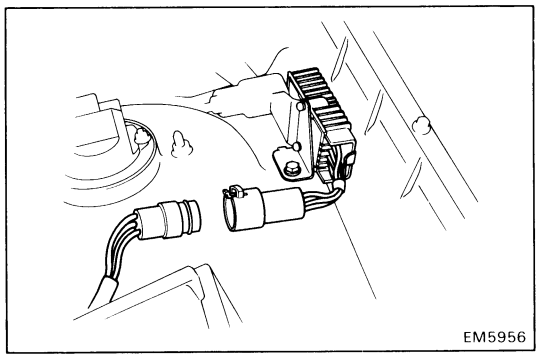

3. **DISCONNECT SOLENOID RESISTOR CONNECTOR**

4. **REMOVE NO.1 AIR CLEANER HOSE**
   (See step 1 on page EM-12)

5. **REMOVE PCV PIPE**

6. **REMOVE IGNITION COIL**
   (See steps 6, 7 on page EM-13)

7. **REMOVE SPARK PLUGS**

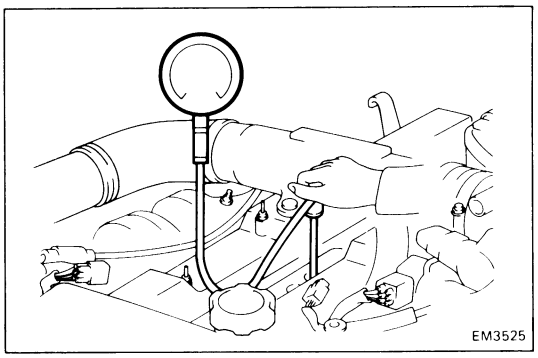

8. **CHECK CYLINDER COMPRESSION PRESSURE**
   (See step 7 on page EM-20)

   Compression pressure:
   10.0 kg/cm² (142 psi, 981 kPa) or more

   Minimum pressure:
   9.0 kg/cm² (128 psi, 883 kPa)

   Difference between each cylinder:
   1.0 kg/cm² (14 psi, 98 kPa) or less

TIMING BELT

COMPONENTS

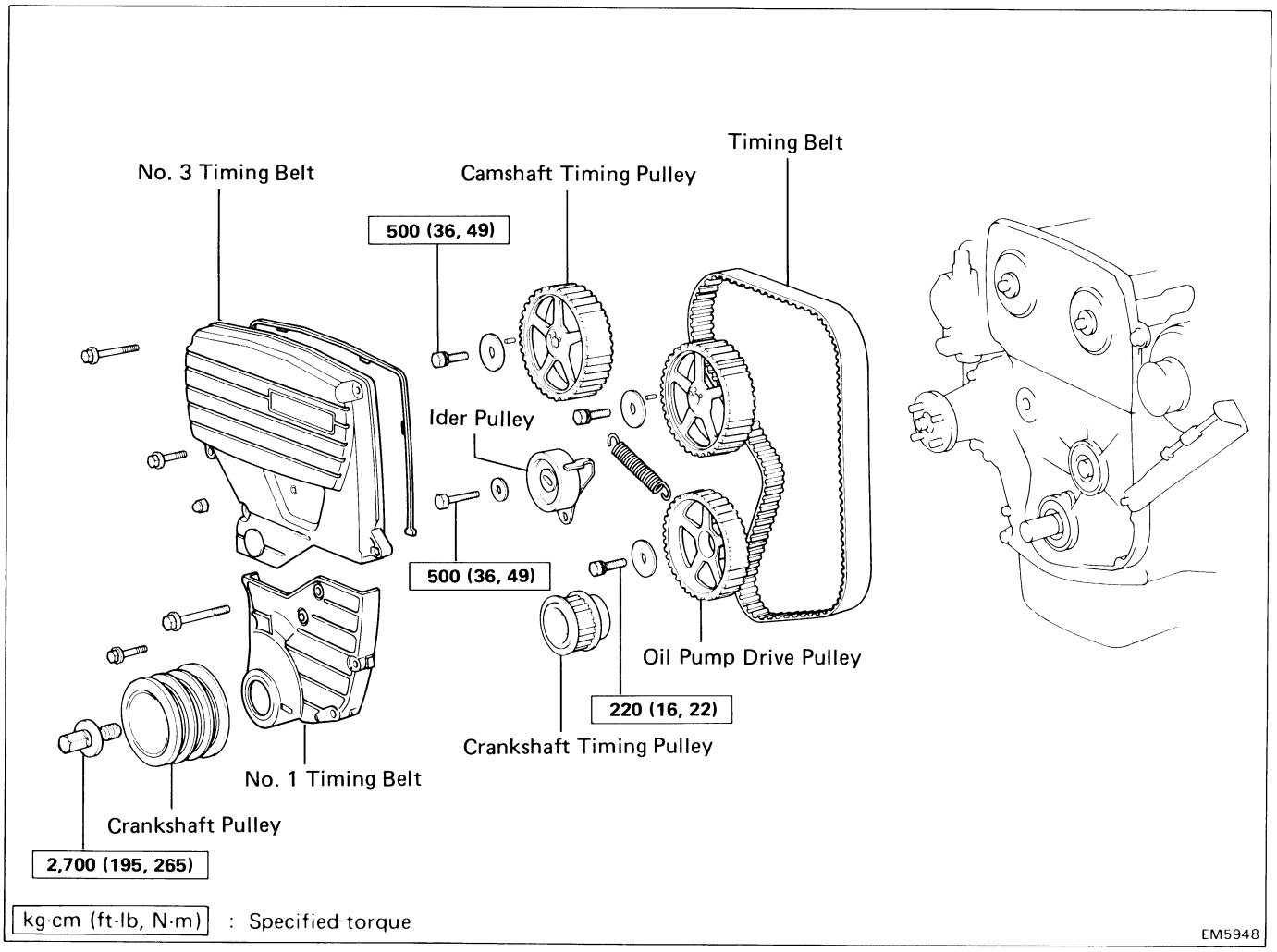

REMOVAL OF TIMING BELT

1. **REMOVE RADIATOR**
   (See page CO-9)

2. **REMOVE SPARK PLUGS**

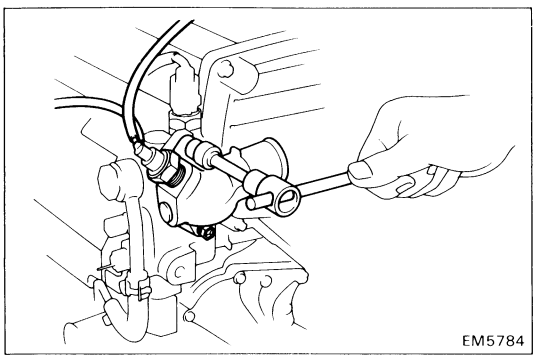

3. **REMOVE WATER OUTLET**

   Remove the two bolts, water outlet and thermostat with gasket.

4. **REMOVE A/C BELT**

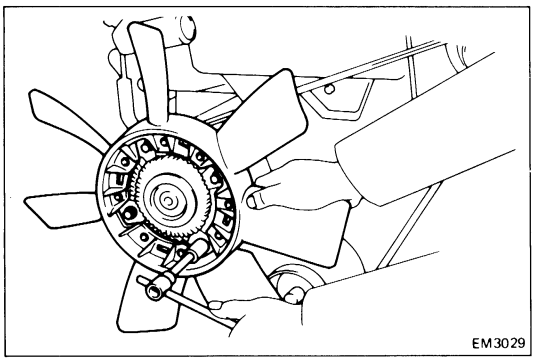

5. **REMOVE FAN AND ALTERNATOR DRIVE BELT**

6. **REMOVE PS BELT**

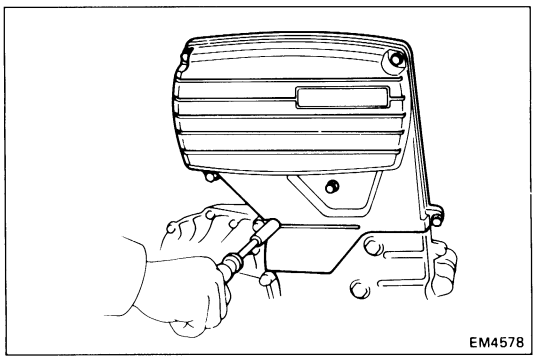

7. **REMOVE NO.3 TIMING BELT COVER**

Remove the five bolts, nut and No.3 timing belt cover with the gasket.

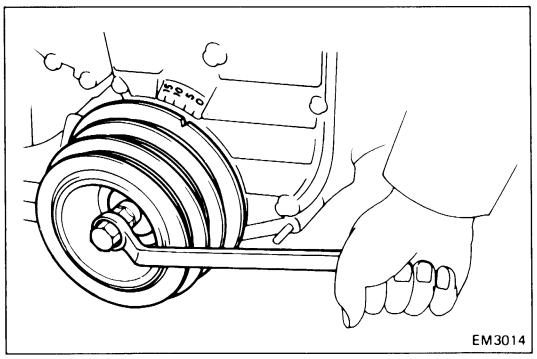

8. **SET NO.1 CYLINDER TO TDC/COMPRESSION**

(a) Turn the crankshaft pulley and align its groove with the "O" mark on the No.1 timing belt cover.

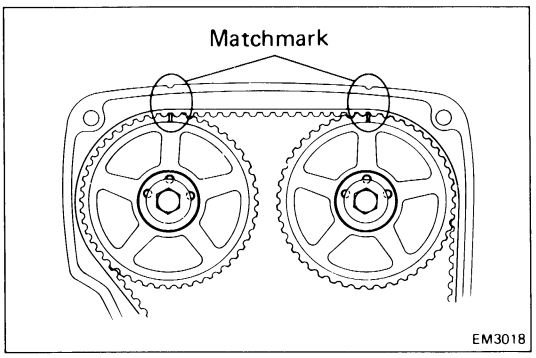

(b) Check that the matchmarks on the camshaft timing pulleys and No.2 timing belt cover are aligned.

If not, turn the crankshaft pulley one complete revolution.

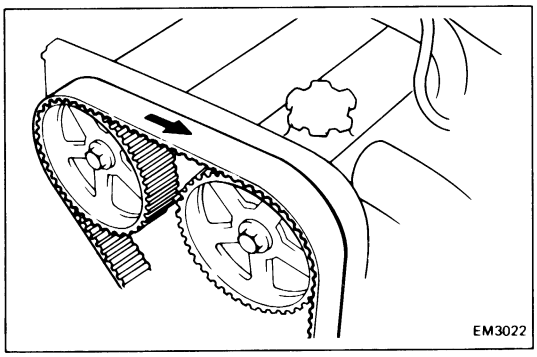

9. **REMOVE TIMING BELT FROM CAMSHAFT TIMING PULLEYS**

HINT: If reusing the timing belt, draw a direction arrow on the belt (in direction of engine revolution).

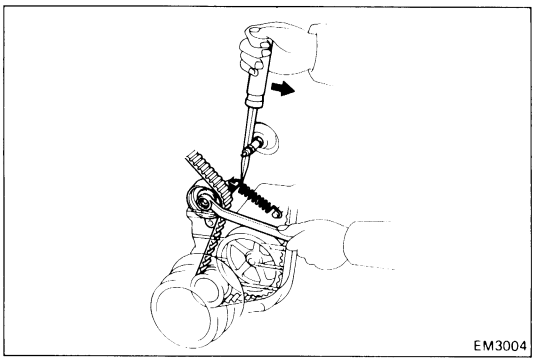

(a) Loosen the idler pulley bolt and shift it left as far as it will go with a screwdriver and wrench.

(b) Temporarily tighten the set bolt and then relieve the timing belt tension.

(c) Remove the belt from the camshaft timing pulleys.

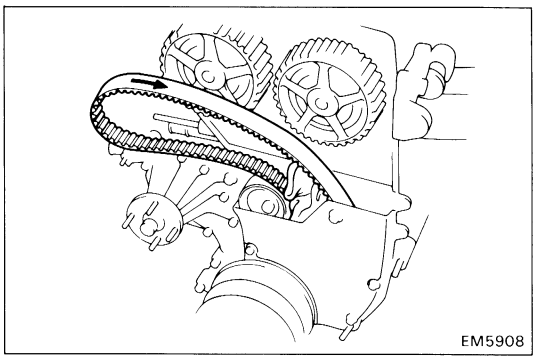

HINT:
- Support the belt so the meshing of the crankshaft timing pulley and timing belt does not shift.
- Be careful not to drop anything inside the timing belt cover.
- Do not allow the belt to come into contact with oil, water and dust.

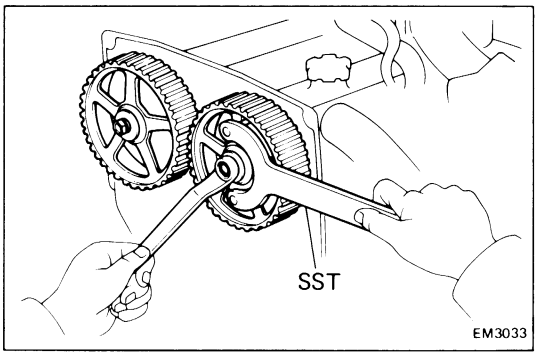

10. REMOVE CAMSHAFT TIMING PULLEYS

Using SST to hold the pulley, remove the pulley bolt, timing pulley and match pin.

SST 09278-54012

HINT: Place the matchmarks on the camshaft timing pulley where the straight pin inserted.

NOTICE: Do not make use of the timing belt tension when removing and installing the pulley bolts.

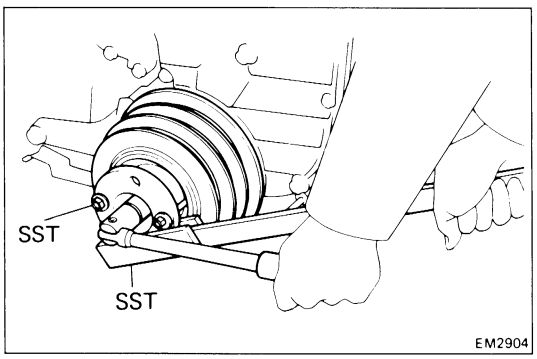

11. REMOVE CRANKSHAFT PULLEY

(a) Using SST to hold the crankshaft pulley, loosen the pulley bolt.

SST 09213-70010 and 09330-00021

(b) Remove SST and pulley bolt.

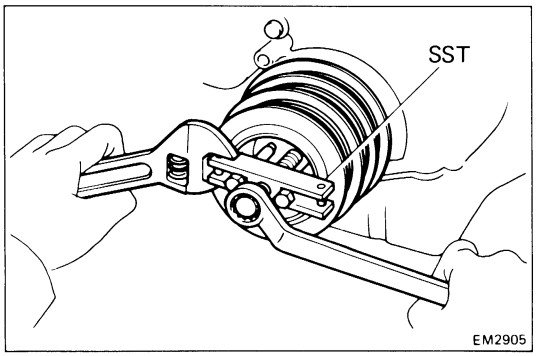

(c) Using SST, remove the pulley.

SST 09213-31021

12. REMOVE PS AIR PIPE

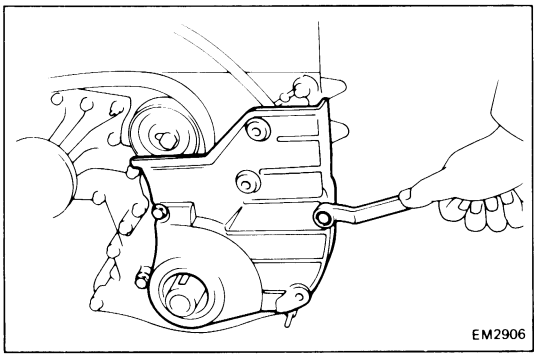

13. REMOVE NO.1 TIMING BELT COVER

(a) Remove the A/C compressor without disconnecting hoses.

(b) Remove the nine bolts, nut, A/C idler pulley bracket, compressor bracket and No.1 timing belt cover.

14. REMOVE TIMING BELT

15. REMOVE IDLER PULLEY AND TENSION SPRING

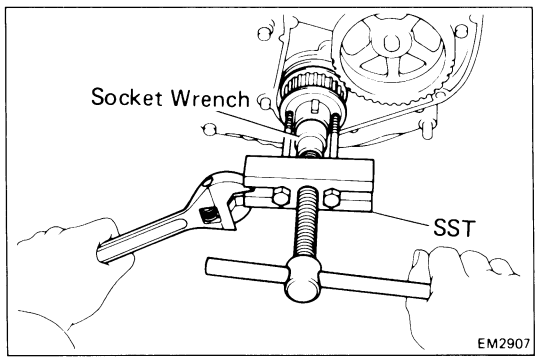

16. REMOVE CRANKSHAFT TIMING PULLEY

Using SST and a socket wrench, remove the crankshaft timing pulley.

SST 09213-60017 (09213-00020, 09213-00030, 09213-00050)

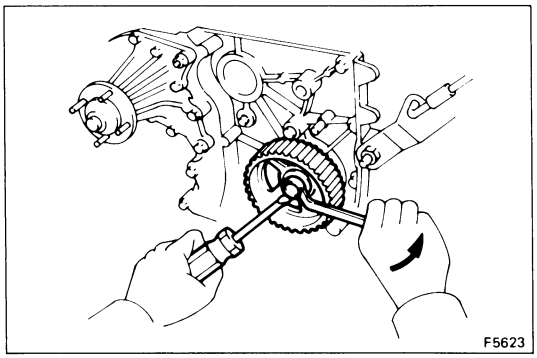

17. REMOVE OIL PUMP DRIVE PULLEY

Using a screwdriver to hold the pulley, remove the pulley bolt and pulley.

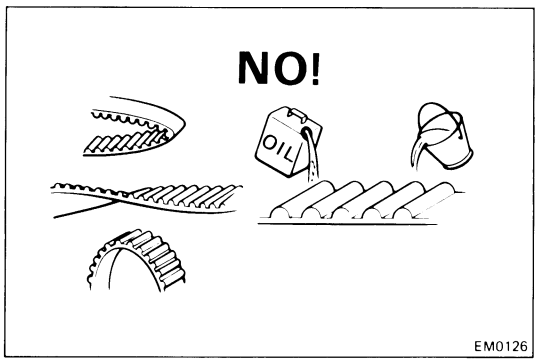

INSPECTION OF COMPONENTS

1. INSPECT TIMING BELT

NOTICE:

- **Do not bend, twist or turn the belt inside out.**
- **Do not allow the belt to come into contact with oil, water or steam.**
- **Do not utilize belt tension when installing or removing the set bolt of the camshaft timing pulley.**

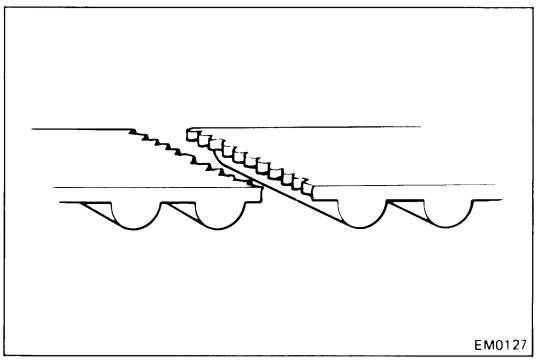

If there are defects as shown in the illustrations. Check the following points and replace the timing belt if necessary.

(a) Premature parting
- Check for proper installation.
- Check the timing belt cover gasket for damage and proper installation.

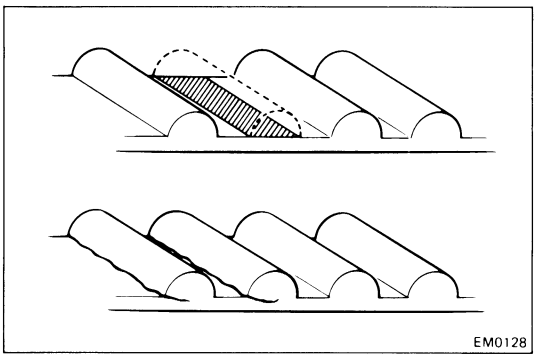

(b) If the belt teeth are cracked or damaged, check to see if the camshaft is locked.

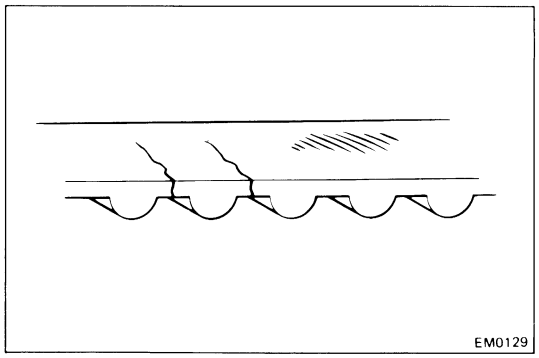

(c) If there is noticeable wear of cracks on the belt face, check to see if there are nicks on one side of the idler pulley lock.

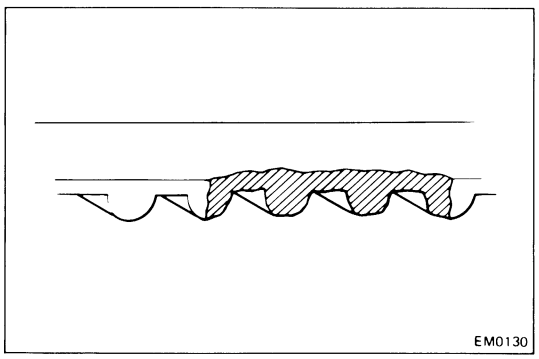

(d) If there is wear or damage on only one side of the belt, check the belt guide and the alignment of each pulley.

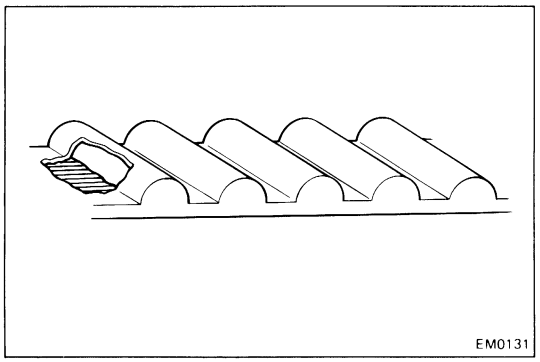

(e) If there is noticeable wear on the belt teeth, check the timing belt cover gasket for damage and correct gasket installation. Check for foreign material on the pulley teeth.

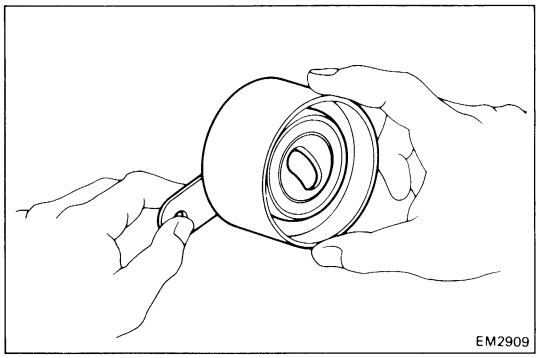

2. INSPECT IDLER PULLEY

Check the turning smoothness of the timing belt idler pulley.

If necessary, replace the idler pulley.

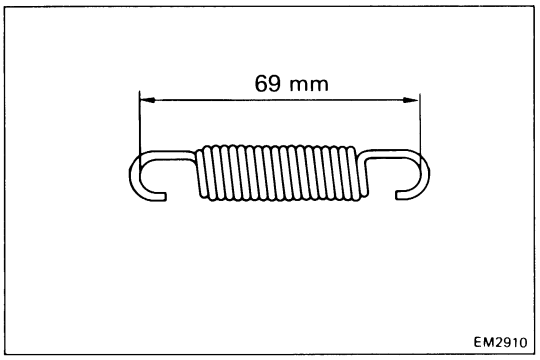

3. INSPECT TENSION SPRING

Check the free length of the spring.

Free length: 69 mm (2.72 in.)

If not as specified, replace the spring.

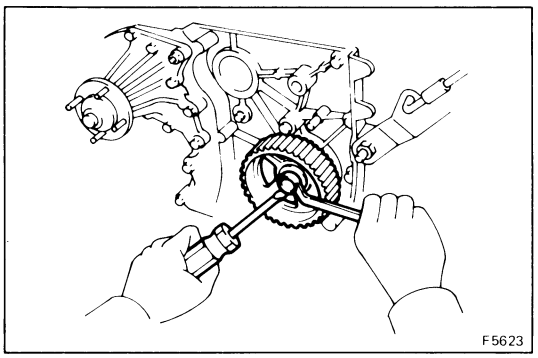

INSTALLATION OF TIMING BELT

(See page EM-22)

1. INSTALL OIL PUMP DRIVE PULLEY

(a) Install the pulley and bolt.

(b) Using a screwdriver to hold the pulley, torque the pulley bolt.

Torque: 220 kg-cm (16 ft-lb, 22 N·m)

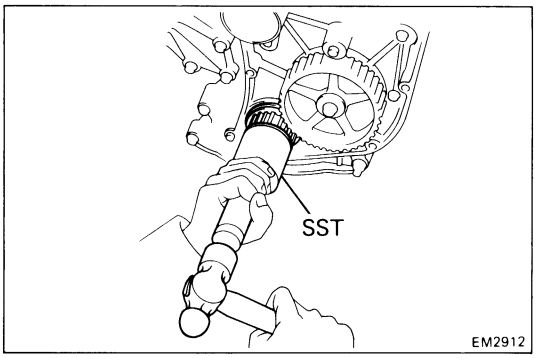

2. INSTALL CRANKSHAFT TIMING PULLEY

Using SST and hammer, drive in the pulley.

SST 09214-60010

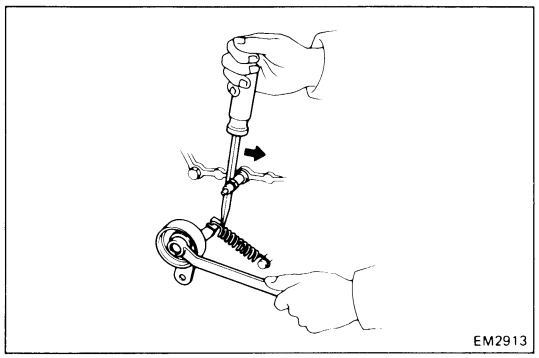

3. TEMPORARILY INSTALL IDLER PULLEY AND TENSION SPRING

(a) Install the idler pulley and tension spring.

(b) Pry the idler pulley toward the left as far as it will go and temporarily tighten it.

HINT: Remove any oil or water on the idler pulley and keep it clean.

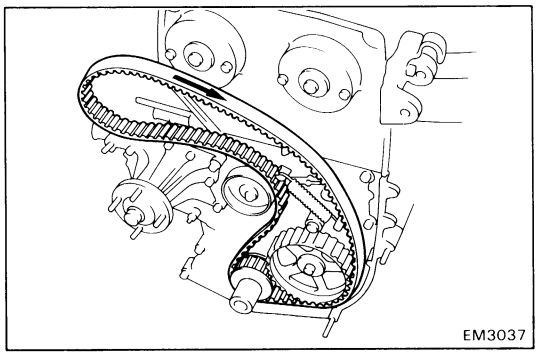

4. TEMPORARILY INSTALL TIMING BELT

NOTICE: The engine should be cold.

HINT: If reusing the timing belt, install it with the rotation direction mark pointing in the same direction as before disassembly.
Install the timing belt on the crankshaft timing pulley, oil pump drive pulley and idler pulley.

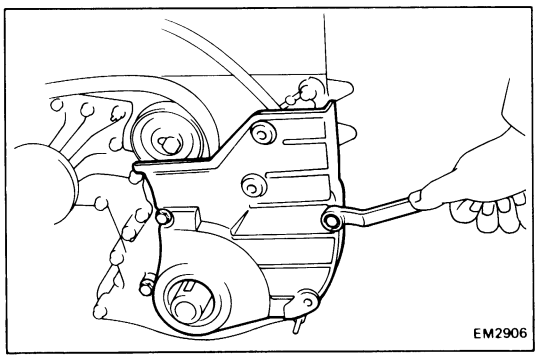

5. INSTALL NO.1 TIMING BELT COVER

(a) Install the No.1 timing timing belt cover, A/C compressor bracket and idler pulley bracket with the nine bolts and two nuts.

(b) Install the A/C compressor.

6. INSTALL PS AIR PIPE

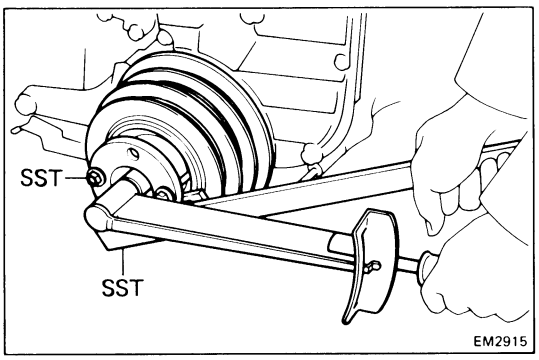

7. INSTALL CRANKSHAFT PULLEY

(a) Align the pulley set key with the key groove of the pulley.

(b) Install the pulley.

(c) Using SST to hold the crankshaft pulley, install and torque the pulley bolt.

SST 09213-70010 and 09330-00021

Torque: 2,700 kg-cm (195 ft-lb, 265 N·m)

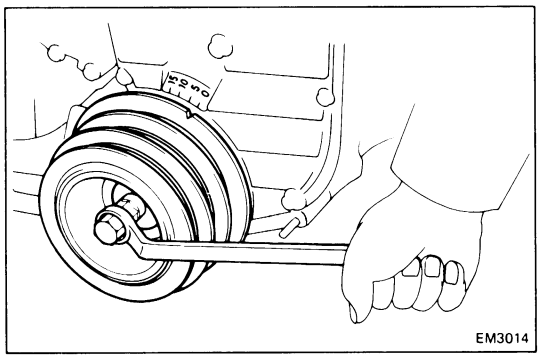

8. SET NO.1 CYLINDER TO TDC/COMPRESSION OF CRANKSHAFT

Turn the crankshaft pulley and align its groove with the "O" mark on the No.1 timing belt cover.

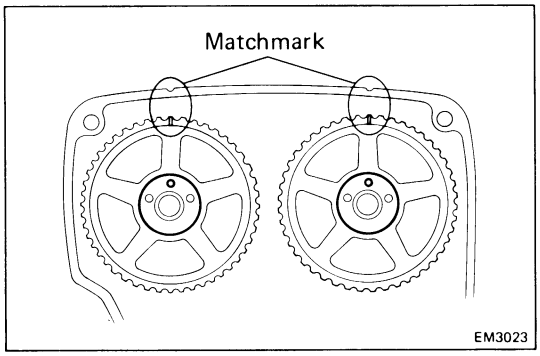

9. INSTALL CAMSHAFT TIMING PULLEYS

(a) Align the timing pulley matchmark with the No.2 timing belt cover matchmark.

(b) Install the timing pulley.

(c) Install the pin to the hole.

HINT:

- When replacing the camshaft or the camshaft timing pulley:
  Align the center holes of the camshaft and timing pulleys, as shown in the illustration and insert the straight pin.
- When reusing the camshaft or camshaft timing pulleys:
  Checking that the straight pin hole position is in the same position it was at disassembly, insert the straight pin.

(d) Install the washer and pulley bolt.

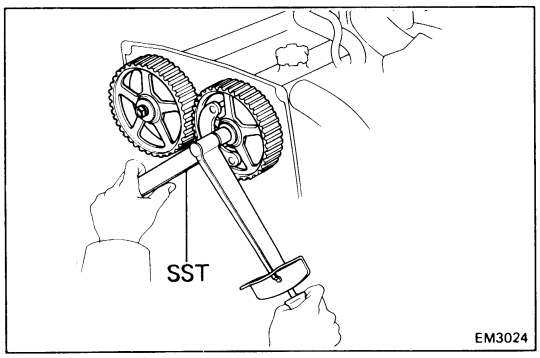

(e) Using SST to hold the pulley, torque the pulley bolt.

SST 09278-54012

Torque: 500 kg-cm (36 ft-lb, 49 N·m)

(f) Check that the matchmarks on the camshaft timing pulley are aligned with those on the No. 2 timing belt cover.

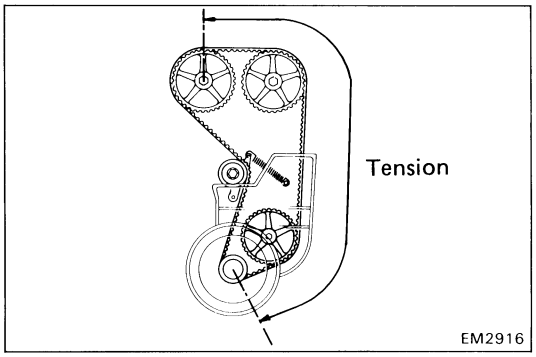

10. INSTALL TIMING BELT

(a) Install the timing belt to the intake camshaft timing pulley, the exhaust camshaft timing pulley and then the idler pulley.

(b) Check that the belt has tension as shown in the illustration.

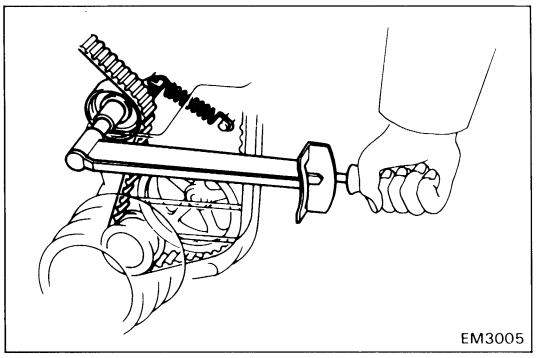

(c) Loosen the idler pulley mount bolt until the pulley is moved slightly by the spring tension.

(d) Torque the idler pulley mount bolt.

Torque: 500 kg-cm (36 ft-lb, 49 N·m)

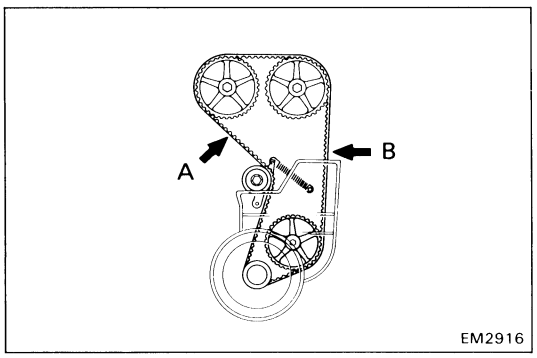

HINT: Check that the timing belt tension at A is equal to that at B.

If not, readjust with the idler pulley.

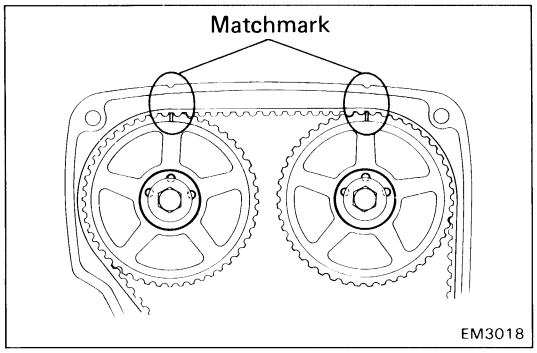

(e) Turn the crankshaft pulley two revolutions clockwise from TDC to TDC.

(f) Check that the matchmarks on the camshaft timing pulleys are aligned with those on the No.2 timing belt cover.

If the marks do not aligh, remove the timing belt and reinstall it.

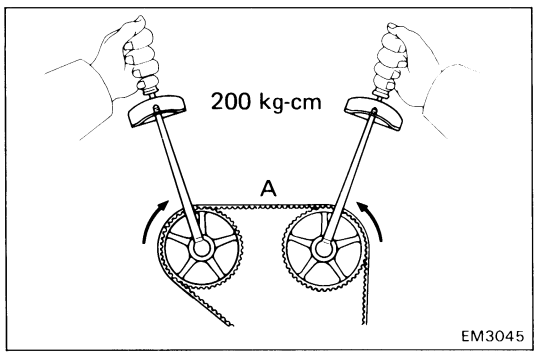

11. CHECK TIMING BELT TENSION

(a) Turn both the intake and exhaust camshaft pulleys inward at the same time to slacken the timing belt at position A.

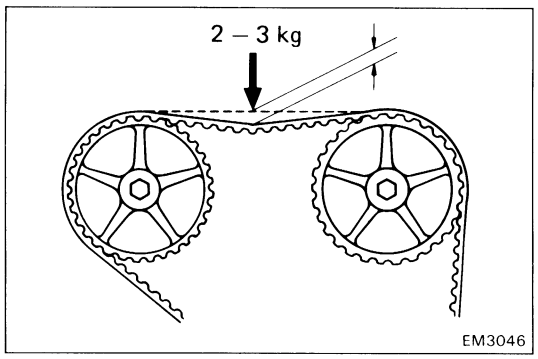

(b) Measure the timing belt deflection as shown.

Belt deflection at 2 — 3 kg (4.4 — 6.6 lb, 20 — 29 N):

Cold	**Used belt**	**5 — 7 mm (0.20 — 0.28 in.)**
	New belt	**4 — 6 mm (0.16 — 0.24 in.)**
Hot (Referance)		**3 — 5 mm (0.12 — 0.20 in.)**

If the measurement is not within specification, adjust by the idler pulley.

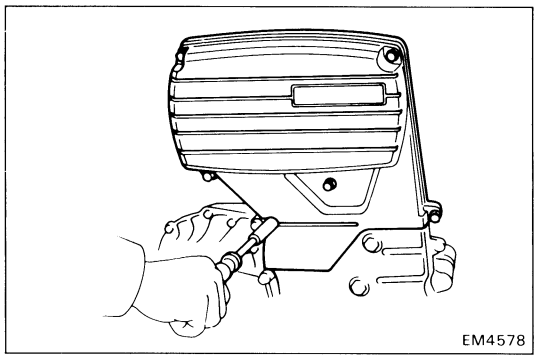

12. INSTALL NO.3 TIMING BELT COVER

Install the gasket and the belt cover with the five bolts and nut.

13. INSTALL PS BELT
(See page MA-4)

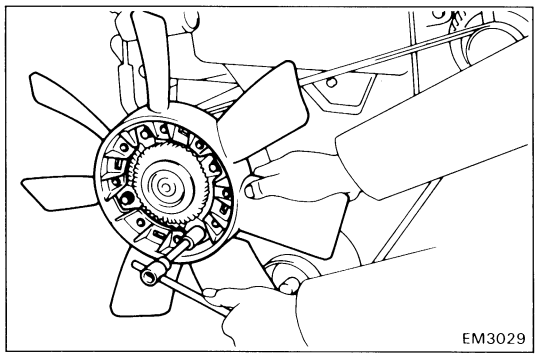

14. INSTALL ALTERNATOR DRIVE BELT AND FAN

Torque:	**Fan**	**55 kg-cm (48 in.-lb, 5.4 N·m)**
	Adjusting bolt	**130 kg-cm (9 ft-lb, 5.4 N·m)**

15. INSTALL A/C BELT

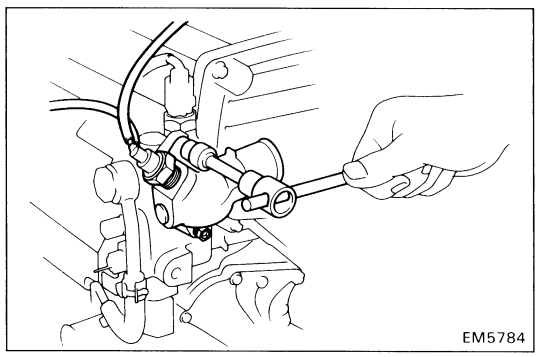

16. INSTALL WATER OUTLET

Install the thermostat with a new gasket and water outlet with the two bolts.

17. INSTALL SPARK PLUGS

18. INSTALL RADIATOR
(See page CO-14)

19. INSTALL NO.1 AIR CLEANER HOSE WITH INTAKE AIR CONNECTOR PIPE

20. START ENGINE

Warm up the engine and inspect for leaks.

21. ROAD TEST

Road test vehicle.

22. RECHECK COOLANT LEVEL
(See page CO-5)

CYLINDER HEAD

COMPONENTS

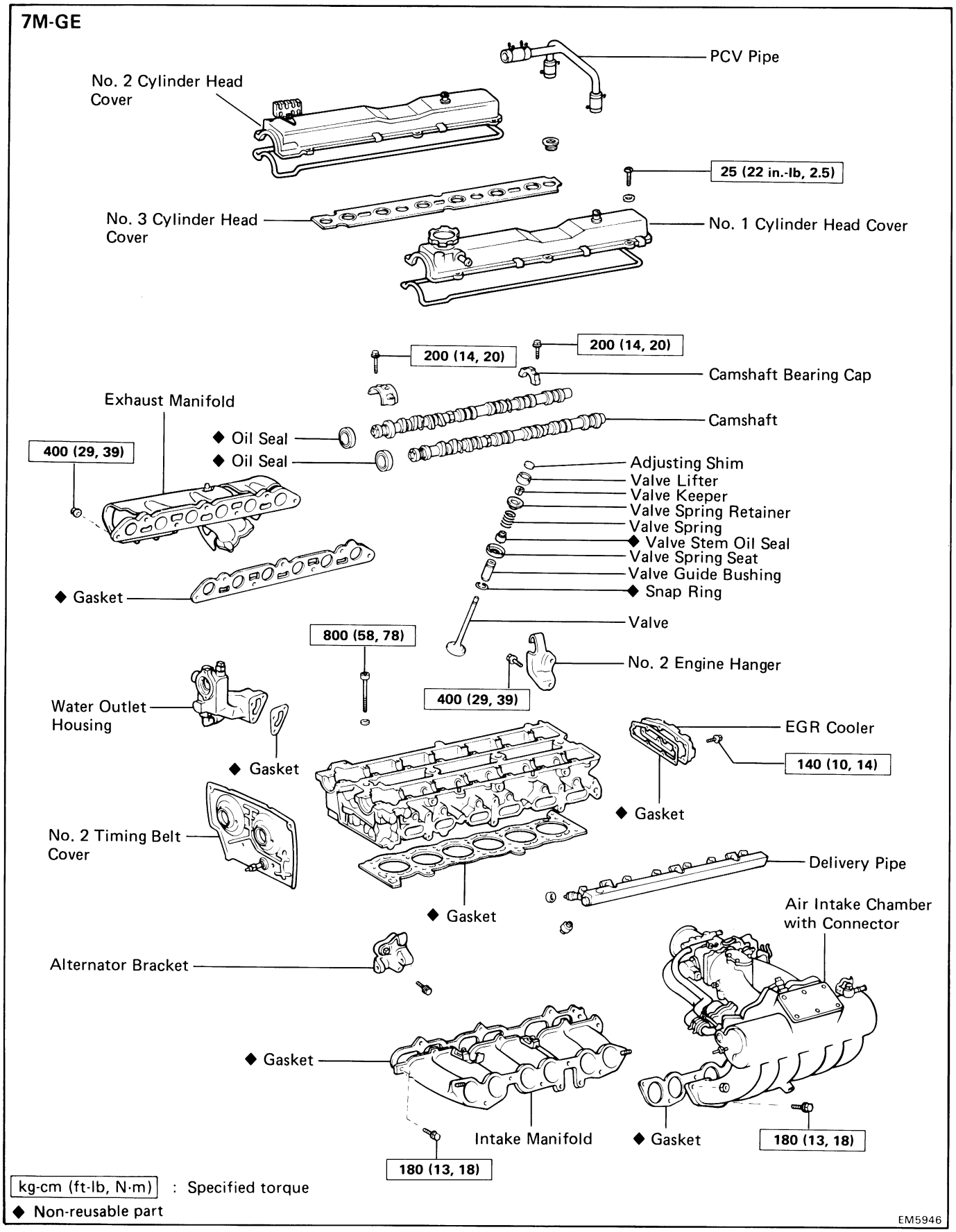

COMPONENTS (Cont'd)

7M-GTE

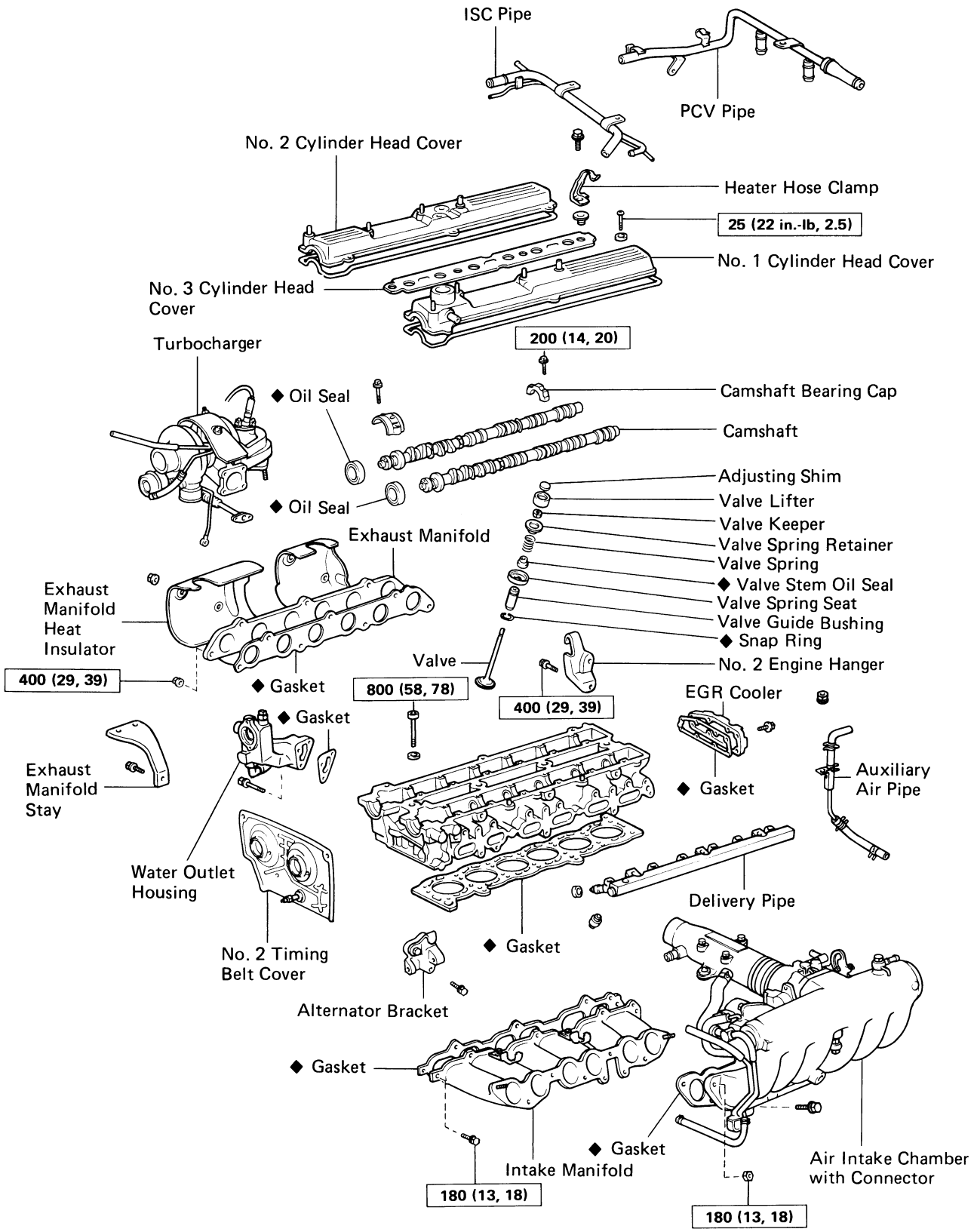

kg-cm (ft-lb, N·m) : Specified torque

◆ Non-reusable part

EM5947

PREPARATION FOR REMOVAL

1. **DISCONNECT CABLE FROM NEGATIVE TERMINAL OF BATTERY**

   CAUTION: Work must be started after approx. 20 seconds or longer from the time the ignition switch is turned to the "LOCK" position and the negative (−) terminal cable is disconnected from the battery.

2. **DRAIN COOLANT**
   (See page CO-5)

3. **DISCONNECT EXHAUST PIPE FROM EXHAUST MANIFOLD**

4. **DISCONNECT FOLLOWING CABLE:**
   (a) Accelerator link w/ cable
   (b) Accelerator rod
   (c) (A/T)
   Throttle cable

5. **DISCONNECT GROUND STRAP FROM ENGINE REAR SIDE**

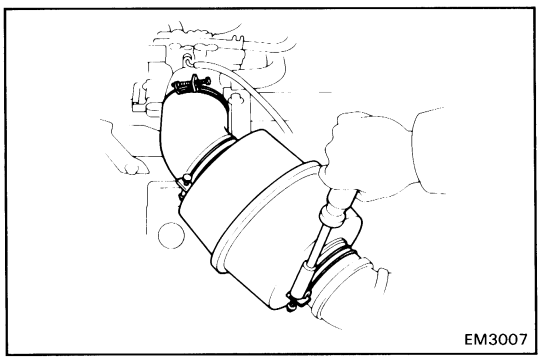

6. **(7M-GE)**

   REMOVE NO.1 AIR CLEANER HOSE WITH INTAKE AIR CONNECTOR PIPE

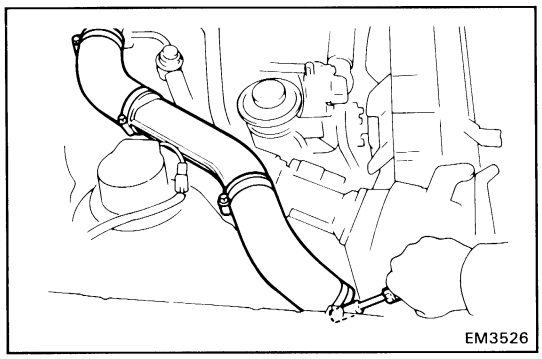

(7M-GTE)

REMOVE NO.4 AIR CLEANER PIPE WITH NO.1 AND NO.2 AIR CLEANER HOSES

7. **DISCONNECT FOLLOWING HOSES:**
   (a) Cruise control vacuum hose
   (b) Charcoal canister hose
   (c) Brake booster hose

8. **REMOVE RADIATOR INLET HOSE**

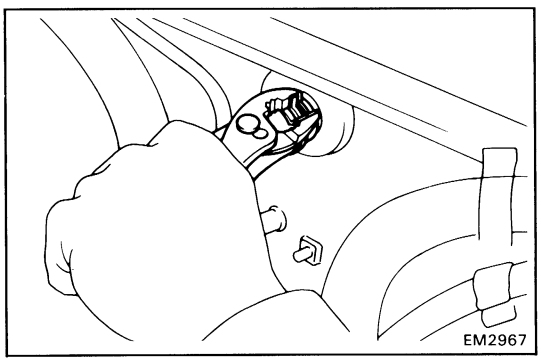

9. **DISCONNECT HEATER INLET HOSE**

REMOVAL OF CYLINDER HEAD

(See pages EM-32, 33)

1. REMOVE ALTERNATOR

(a) Disconnect the No.3 PCV hose.

(b) Remove the drive belt.

(c) Remove the alternator and adjusting bar.

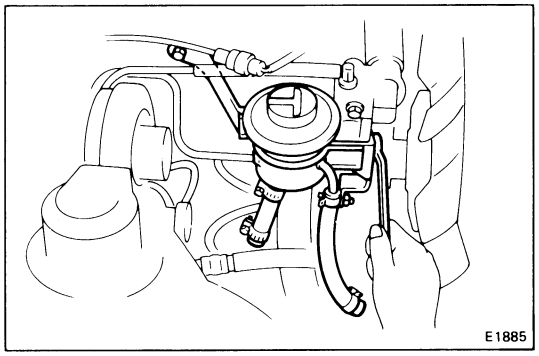

2. (7M-GTE)
REMOVE PS RESERVOIR TANK

Remove the two bolts, nut and reservoir tank with bracket.

3. (7M-GTE)
REMOVE CAM POSITION SENSOR

4. REMOVE AIR INTAKE CHAMBER WITH CONNECTOR

(a) Remove the PCV pipe.

(b) Disconnect the following connectors:

- (7M-GE)
  Cold start injector connector
- Throttle position sensor connector
- ISC valve connector

(c) Disconnect the following hoses:

- BVSV hose from throttle body
- EGR hoses from throttle body
- Vacuum transmitting pipe hoses from intake chamber
- Pressure regulator hose
- PS air hose
- (7M-GTE)
  VSV hoses (for FPU)
- (7M-GE)
  Diaphragm hose
- (7M-GTE)
  Auxiliary air pipe hose from vacuum transmitting pipe hose
- No.1 water by-pass hose from ISC valve
- (7M-GE)
  No.3 water by-pass hose from throttle body
- (7M-GTE)
  No.3 water by-pass hose from water by-pass pipe

(d) Remove the EGR pipe mounting bolts.

(e) Remove the manifold stay mounting bolts.

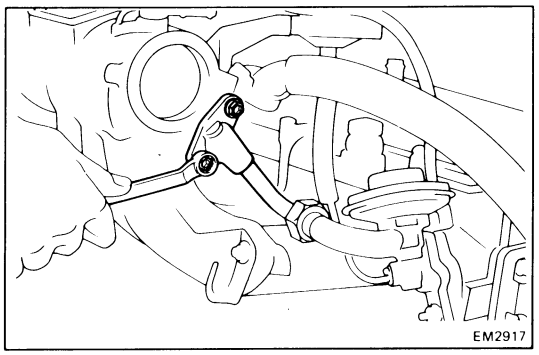

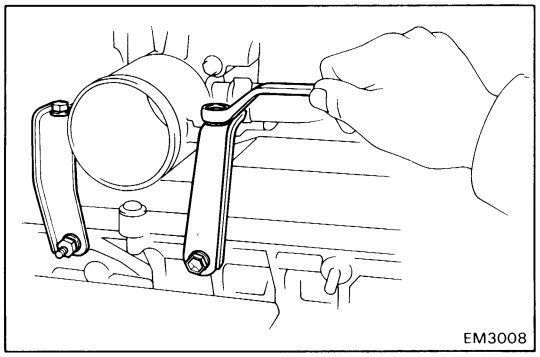

(f) (7M-GE)
Remove the throttle body brackets.

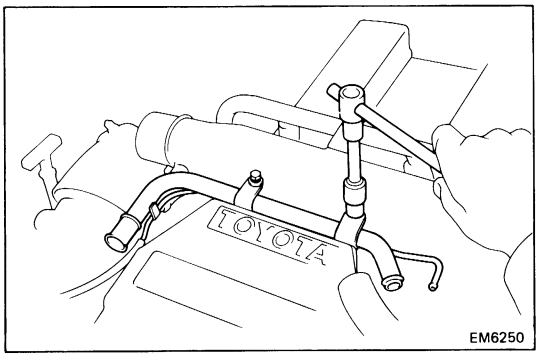

(g) (7M-GTE)
Remove the ISC pipe.

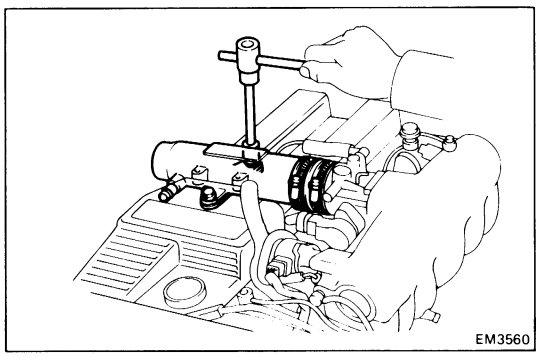

(h) (7M-GTE)
Remove the air intake connector mounting bolts.

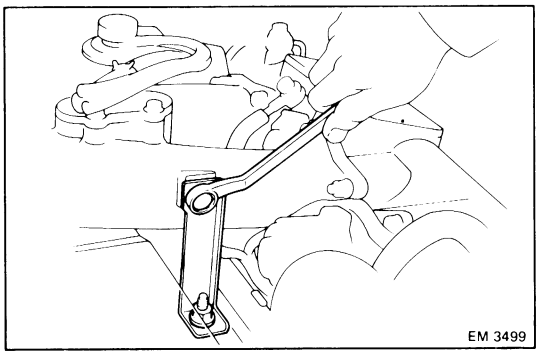

(i) (7M-GE)
Remove the air intake connector bracket mounting bolts.

(j) Remove the cold start injector tube.

(k) Remove the EGR vacuum modulator from the bracket.

(l) Disconnect the engine wire from the clamps of intake chamber.

(m) Remove the two nuts, five bolts, vacuum transmitting pipes and intake chamber with connector and gasket.

(n) (7M-GTE)
Disconnect the cold start injector connector.

5. **(7M-GTE)**

REMOVE IGNITION COIL WITH BRACKET
(See steps 6, 7 on page EM-13)

6. REMOVE ENGINE WIRE

(a) Disconnect the following connectors and wire:

- Oxygen sensor connector
- Oil pressure sender gauge connector
- Water temp. sensor connector
- Water temp. sender gauge connector
- Cold start injector time switch connector
- (7M-GE)
  Distributor connector
- Injector connectors
- Two VSV connectors
- Knock sensor connector(s)
- Ground strap from intake manifold
- Check connector
- (7M-GTE)
  Solenoid resister connector
- (7M-GE)
  Ignition coil connector

  (7M-GTE)
  Igniter connectors
- Noise filter connector
- Main relay connector
- Starter connector (terminal 50)
- Transmission connectors

(b) Remove the engine wire from the four clamps.

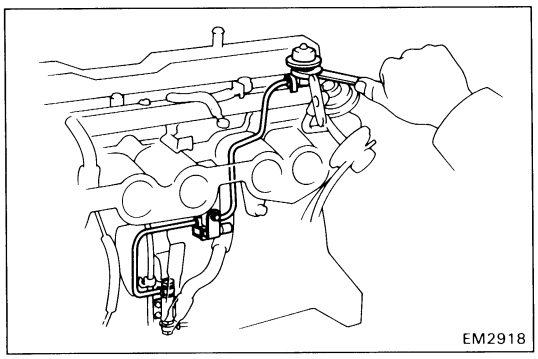
EM2918

7. REMOVE NO.1 FUEL PIPE

(a) Remove the union bolt (7M-GE) or pulsation damper (7M-GTE) and two gaskets from the delivery pipe.

(b) Remove the union bolt and two gaskets from the fuel support.

(c) Remove the clamp bolt and No.1 fuel pipe with VSV.

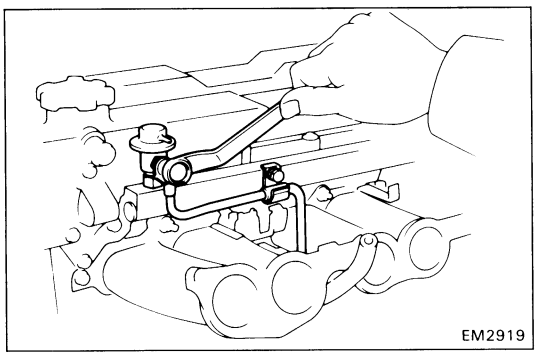
EM2919

8. REMOVE NO.2 FUEL PIPE

(a) Disconnect the fuel hose from the fuel support.

(b) Remove the bolt, union bolt, No.2 fuel pipe and gaskets.

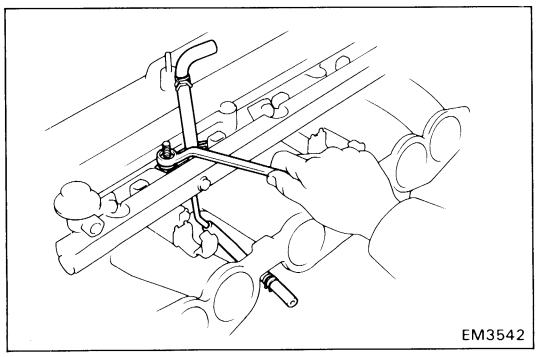
EM3542

9. (7M-GTE)
REMOVE AUXILIARY AIR PIPE

10. (7M-GE)
REMOVE HIGH-TENSION CORDS AND DISTRIBUTOR

11. (7M-GE)
REMOVE OIL DIPSTICK

12. (7M-GTE)
REMOVE TURBOCHARGER
(See steps 5 to 7 and 9 to 15 on pages TC-10 to 12)

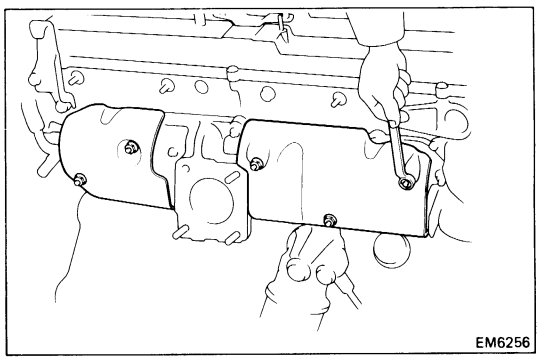

13. REMOVE EXHAUST MANIFOLD

(a) (7M-GTE)
Remove the five nuts and heat insulators.

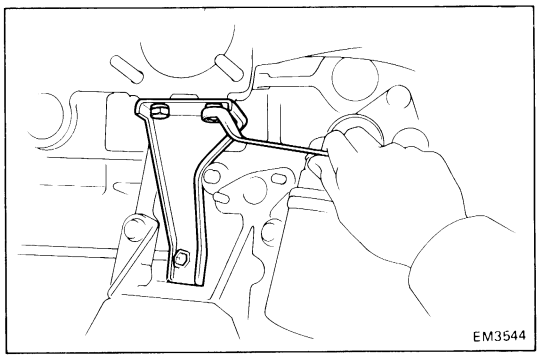

(b) (7M-GTE)
Remove the three bolts and exhaust manifold stay.

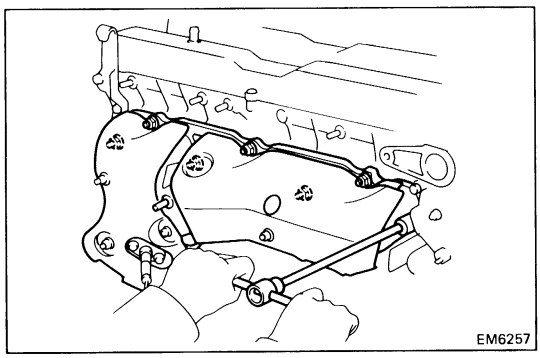

(c) Remove the seven nuts, exhaust manifold and gasket.

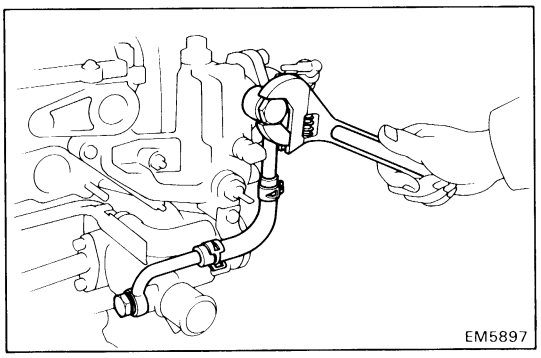

14. REMOVE WATER OUTLET HOUSING

(a) (7M-GE)
Remove the union bolts, union with No.4 water by-pass hose and gaskets.

(b) Disconnect the No.6 water by-pass hose from the water by-pass pipe.

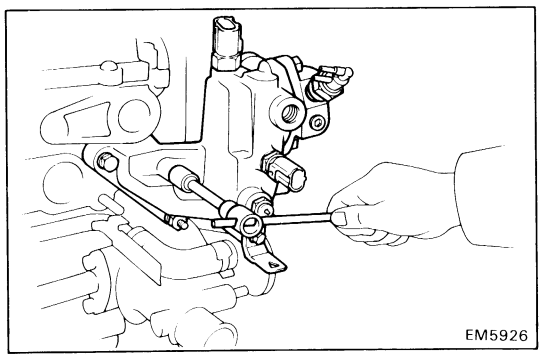

(c) Remove the bolt, two nuts, water outlet housing and gasket.

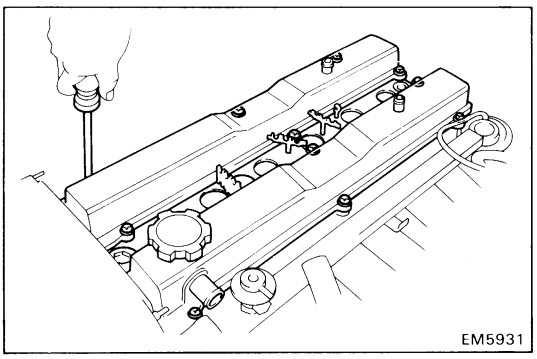

15. REMOVE CYLINDER HEAD COVERS

(a) Remove the accelerator link.

(b) Remove the heater hose clamp.

(c) Remove the No. 1 and No. 2 cylinder head covers.

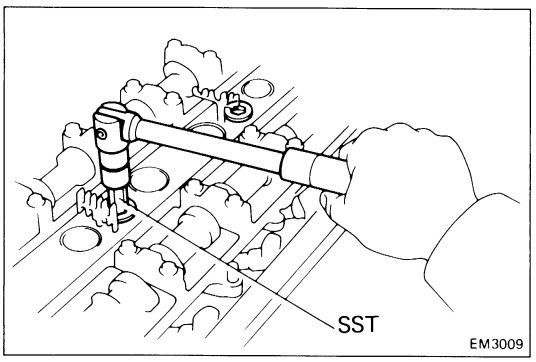

(d) Using SST, remove the No.3 cylinder head cover.

SST 09923-00010

16. REMOVE SPARK PLUGS

17. REMOVE TIMING BELT AND CAMSHAFT TIMING PULLEYS
(See steps 5 and 8 to 10 on pages EM-23, 24)

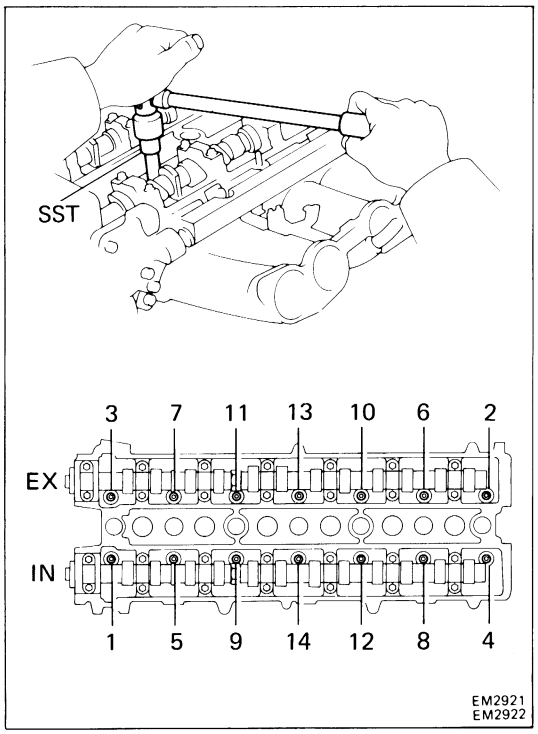

18. REMOVE CYLINDER HEAD

(a) Using SST, remove the head bolts gradually in three passes and in the numerical order shown.

SST 09043-38100

NOTICE: Head warpage or cracking could result from removing bolts in incorrect order.

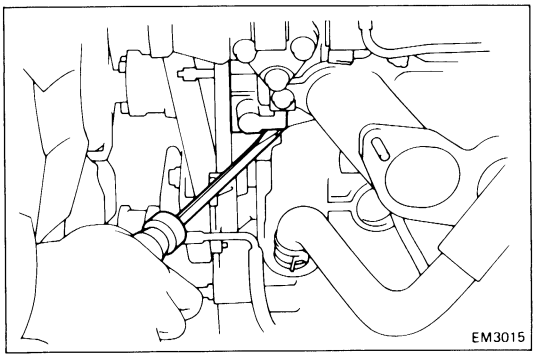

(b) Lift the cylinder head from the dowels on the cylinder block. As the cylinder head is lifted, separate the No.5 water by-pass hose from the union.

(c) Place the head on wooden blocks on a bench.

If the cylinder head is difficult to lift off, pry with a screwdriver between the cylinder head and block projection.

NOTICE:

- **Be careful not to damage the cylinder head and block surface of the cylinder head gasket.**
- **Be careful not to damage the VSV.**

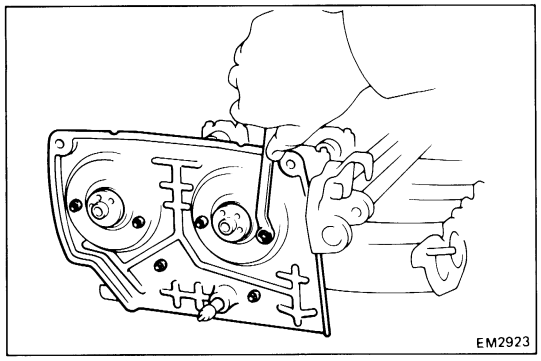

DISASSEMBLY OF CYLINDER HEAD

(See pages EM-32, 33)

1. REMOVE NO.2 TIMING BELT COVER

2. REMOVE ALTERNATOR BRACKET

3. REMOVE HEATER INLET HOSE

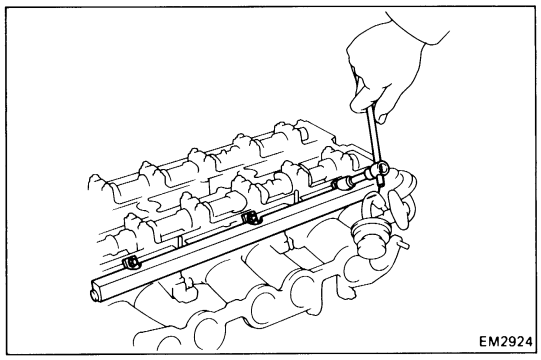

4. REMOVE DELIVERY PIPE WITH INJECTORS

(a) Remove the three bolts, and then remove the delivery pipe with the injectors.

HINT: When removing the delivery pipe, be careful not to drop the injectors.

(b) Remove the six insulators and three spacers from the cylinder head.

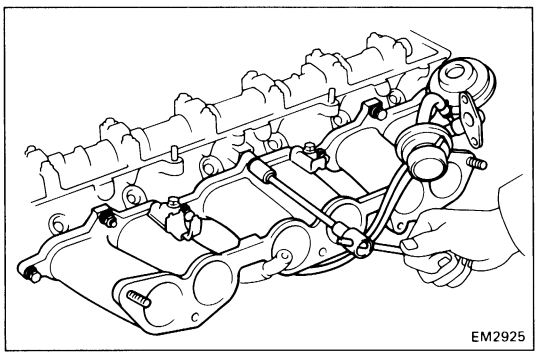

5. REMOVE INTAKE MANIFOLD

Remove the four nuts, seven bolts, EGR valve, VSV, intake manifold and gasket.

6. REMOVE NO.2 ENGINE HANGER AND GROUND STRAP

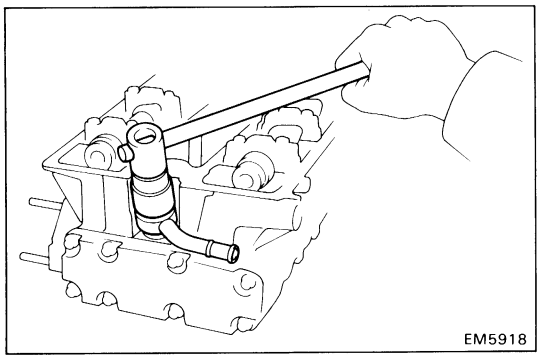

7. REMOVE HEATER UNION

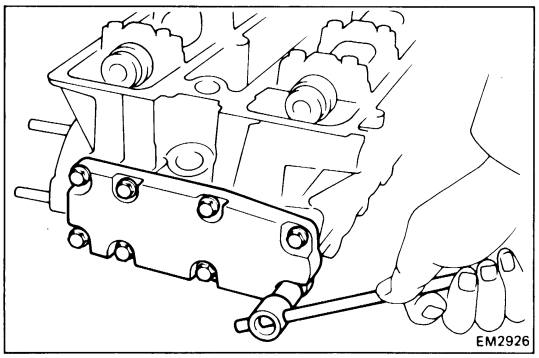

8. REMOVE EGR COOLER

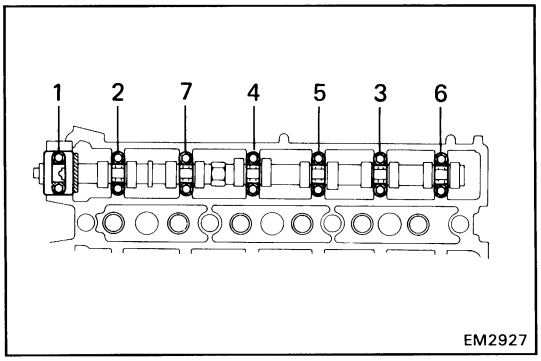

9. REMOVE BEARING CAPS AND CAMSHAFTS

(a) Loosen each bearing cap bolt a little at a time and in the sequence shown in the figure.

(b) Remove the camshaft bearing caps, oil seal and camshaft.

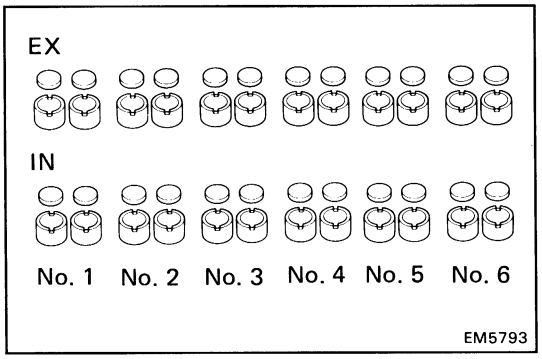

10. REMOVE VALVE LIFTERS WITH SHIMS

HINT: Arrange the valve lifters and shims in order.

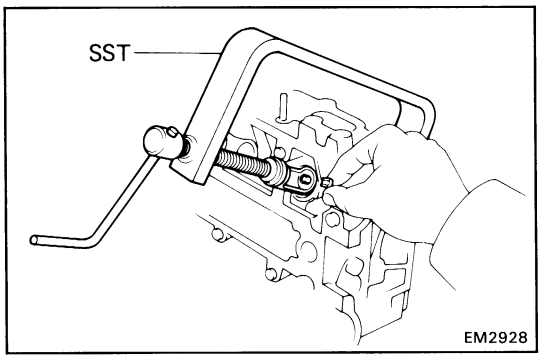

11. REMOVE VALVES

(a) Using SST, press the valve spring and remove the two keepers.

SST 09202-70010

(b) Remove the spring retainer, valve spring, seat and valve.

(c) Pry out the oil seal.

HINT: Arrange the valves, spring seats, valve springs and retainers in correct order.

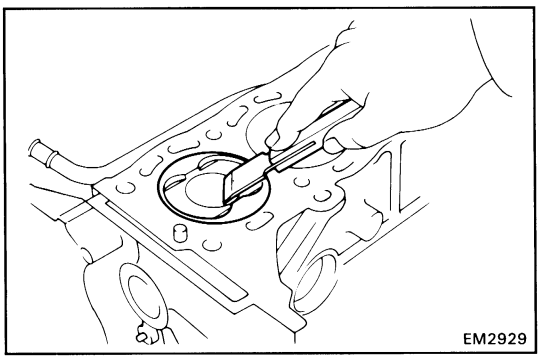

INSPECTION, CLEANING AND REPAIR OF CYLINDER HEAD COMPONENTS

1. CLEAN TOP OF PISTONS AND TOP OF CYLINDER BLOCK

(a) Turn the crankshaft and bring each piston to top dead center. Using a gasket scraper, remove all the carbon from the piston tops.

(b) Using a gasket scraper, remove all gasket material from the top of the block. Blow carbon and oil from the bolt holes.

CAUTION: Protect your eyes when using compressed air.

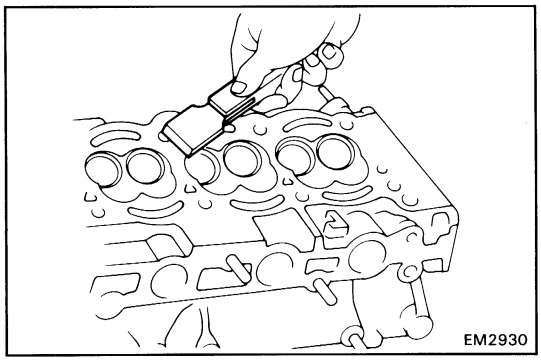

2. REMOVE GASKET MATERIAL

Using a gasket scraper, remove all gasket material from the head and manifold surfaces.

NOTICE: Be careful not to scratch the surfaces.

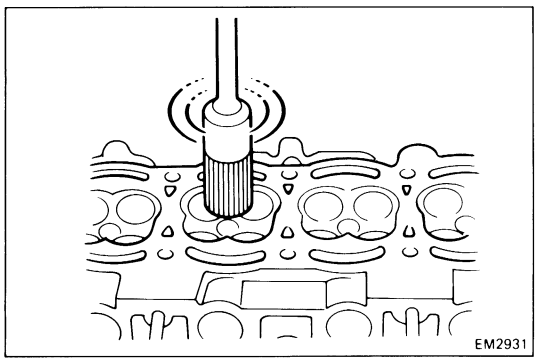

3. **CLEAN COMBUSTION CHAMBER**

Using a wire brush, remove all the carbon from the combustion chambers.

NOTICE: Be careful not to scratch the head gasket contact surface.

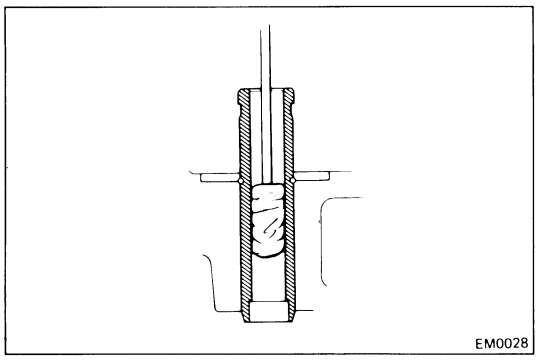

4. **CLEAN VALVE GUIDE BUSHINGS**

Using a valve guide brush and solvent, clean all the valve guide bushings.

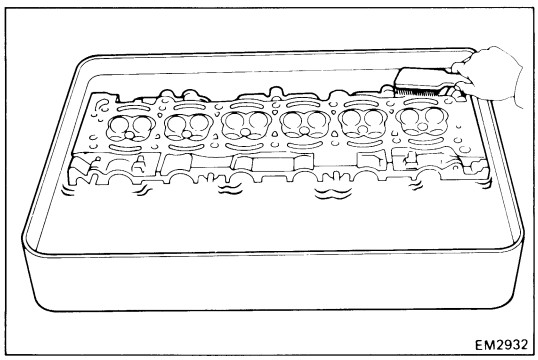

5. **CLEAN CYLINDER HEAD**

Using a soft brush and solvent, thoroughly clean the head.

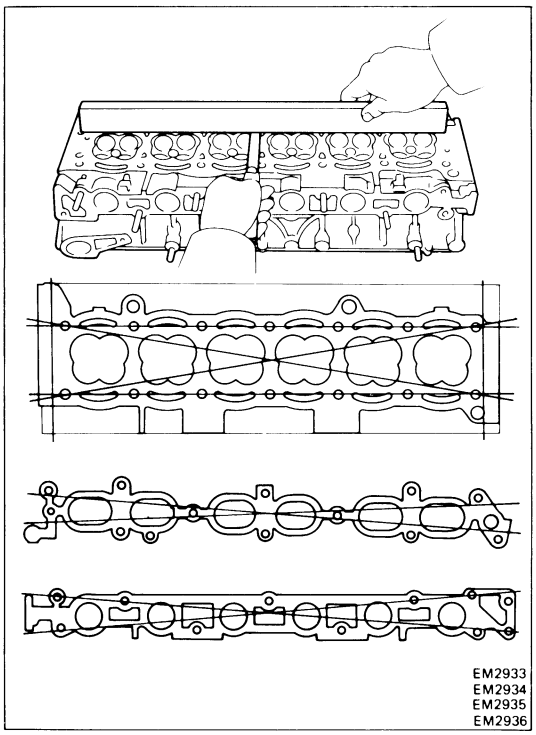

6. **INSPECT CYLINDER HEAD FOR FLATNESS**

Using a precision straight edge and thickness gauge, measure the surface contacting the cylinder block and manifold for warpage.

Maximum warpage: 0.10 mm (0.0039 in.)

If warpage is greater than maximum, replace the cylinder head.

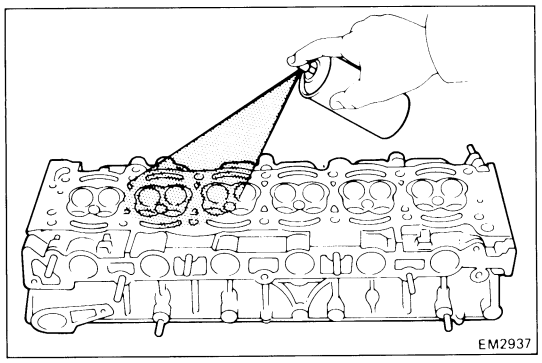

7. INSPECT CYLINDER HEAD FOR CRACKS

Using a dye penetrant, check the combustion chamber, intake and exhaust ports, head surface and the top of the head for cracks.

If cracked, replace the head.

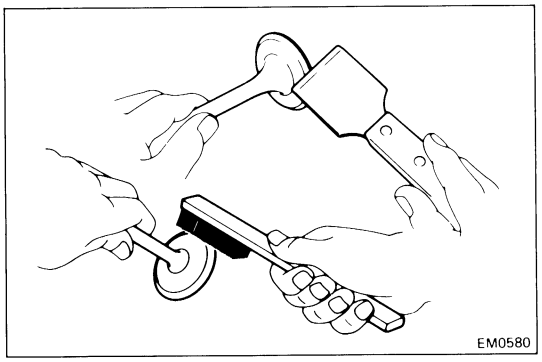

8. CLEAN VALVES

(a) Using a gasket scraper, chip any carbon from the valve head.

(b) Using a wire brush, thoroughly clean the valve.

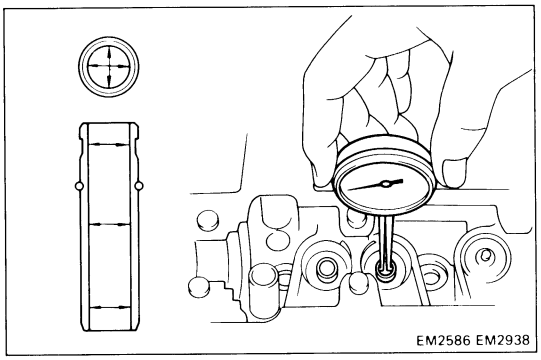

9. INSPECT VALVE STEMS AND GUIDE BUSHINGS

(a) Using a caliper gauge, measure the inside diameter of the valve guide bushing.

Guide inside diameter: 6.010 – 6.030 mm (0.2366 – 0.2374 in.)

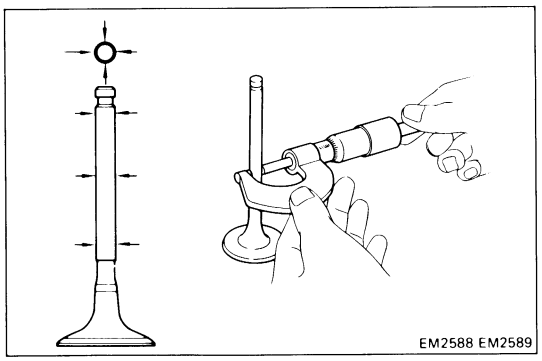

(b) Using a micrometer, measure the diameter of the valve stem.

Stem diameter:

Intake	**5.970 – 5.985 mm (0.2350 – 0.2356 in.)**
Exhaust	**5.965 – 5.980 mm (0.2348 – 0.2354 in.)**

(c) Subtract the valve stem diameter measurement from the valve guide bushing inside diameter measurement.

Standard stem oil clearance:

Intake	**0.025 – 0.060 mm (0.0010 – 0.0024 in.)**
Exhaust	**0.030 – 0.065 mm (0.0012 – 0.0026 in.)**

Maximum stem oil clearance:

Intake	**0.08 mm (0.0031 in.)**
Exhaust	**0.10 mm (0.0039 in.)**

If the clearance is greater than maximum, replace the valve and guide bushing.

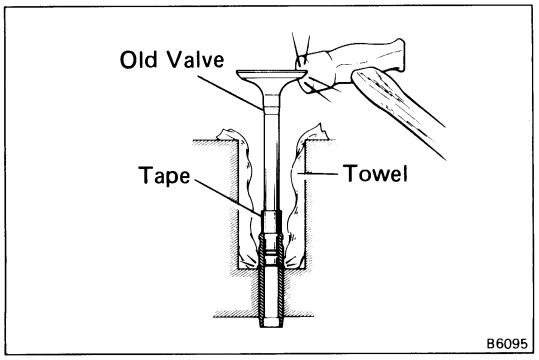

10. IF NECESSARY, REPLACE VALVE GUIDE BUSHINGS

(a) Insert an old valve wrapped with tape into the valve guide bushing and break off the valve guide bushing by hitting it with a hammer.

NOTICE: Be careful not to damage the lifter hole.

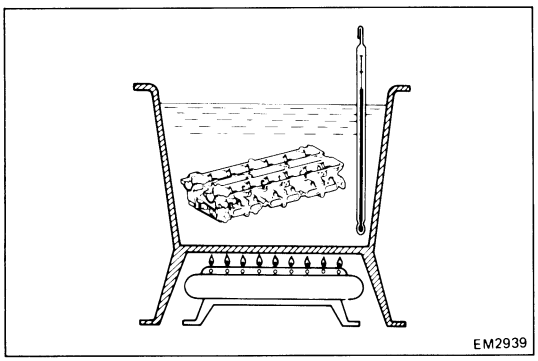

(b) Gradually heat the cylinder head to approx. 90°C (194°F).

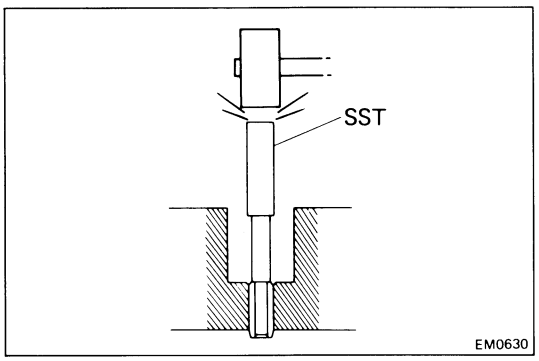

(c) Using SST and hammer, drive out valve guide bushing.

SST 09201-70010

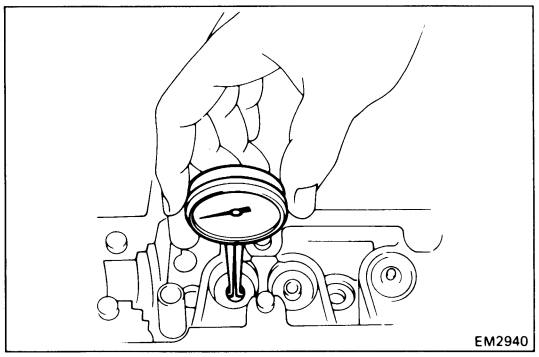

(d) Using a caliper gauge, measure the valve guide bore of the cylinder head.

(e) Select a new valve guide bushing.

If the valve guide bushing bore of the cylinder head is more than 11.027 mm (0.4341 in.), machine the bore to the following dimensions.

Rebored valve guide bushing bore dimension:
11.050 — 11.077 mm (0.4350 — 0.4361 in.)

Both intake and exhaust

Bushing bore mm (in.)	Bushing size
11.000 – 11.027 (0.4331 – 0.4341)	Use STD
Over 11.027 (0.4341)	Use O/S 0.05

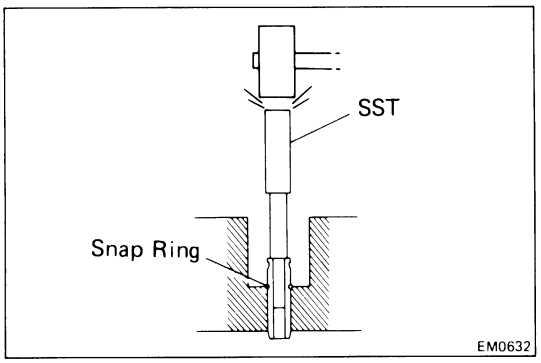

(f) Gradually heat the cylinder head to approx. 90°C (194°F).

(g) Using SST and hammer, drive in a new valve guide bushing until the snap ring makes contact with the cylinder head.

SST 09201-70010

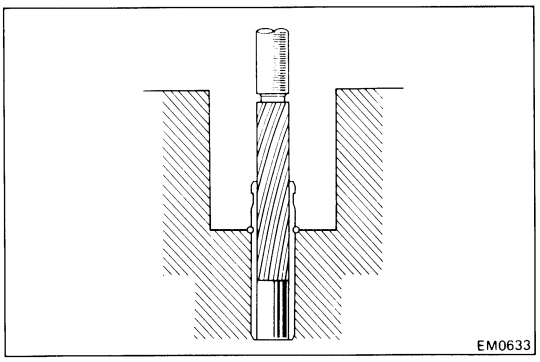

(h) Using a sharp 6 mm (0.24 in.) reamer, ream the valve guide bushing to obtain standard specified clearance (See page EM-43) between the valve guide bushing and new valve.

11. INSPECT AND GRIND VALVES

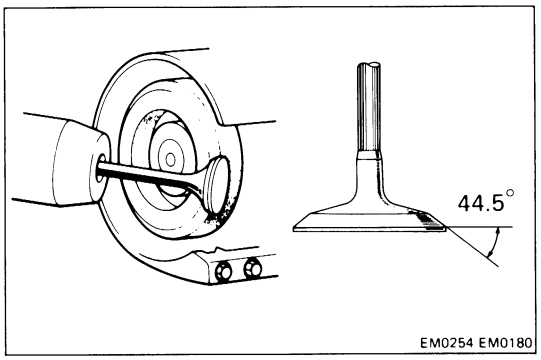

(a) Grind the valve only enough to remove pits and carbon.

(b) Check that the valve is ground to the correct valve face angle.

Valve face angle: 44.5°

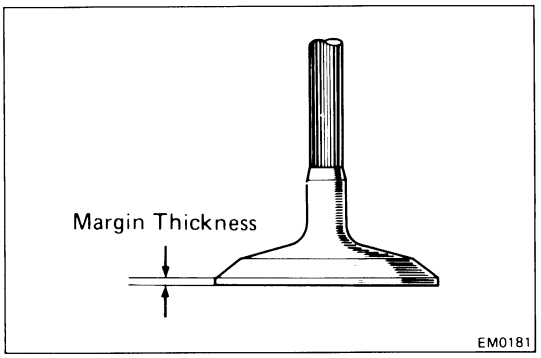

(c) Check the valve head margin thickness.

Standard margin thickness: 1.3 mm (0.051 in.)

Minimum margin thickness: 0.5 mm (0.020 in.)

If the valve head margin thickness is less than minimum, replace the valve.

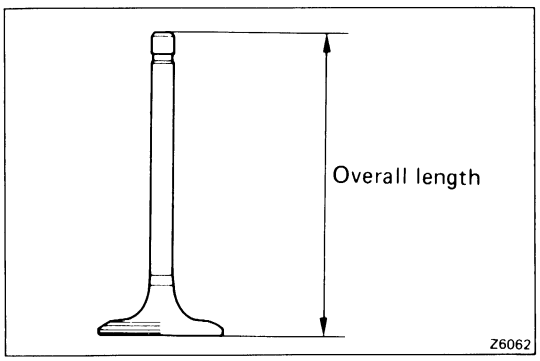

(d) Check the valve overall length.

Standard overall length: 98.15 mm (3.8642 in.)

Minimum overall length: 97.75 mm (3.8484 in.)

If the valve overall length is less than minimum, replace the valve.

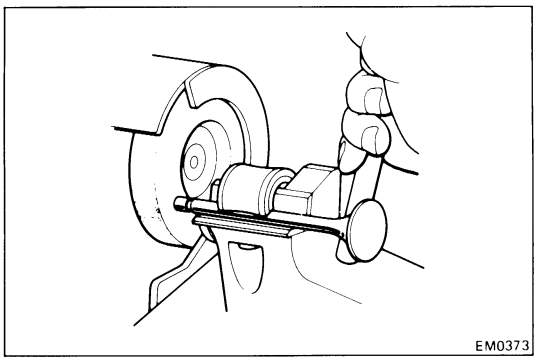

(e) Check the surface of the valve stem tip for wear.

If the valve stem tip is worn, regrind it with grinder or replace the valve if necessary.

NOTICE: Do not grind off more than minimum overall length (See page EM-45).

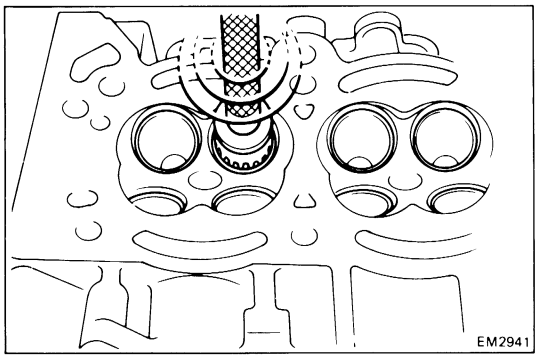

12. INSPECT AND CLEAN VALVE SEATS

(a) Using a 45° cutter, resurface the valve seats. Remove only enough metal to clean the seats.

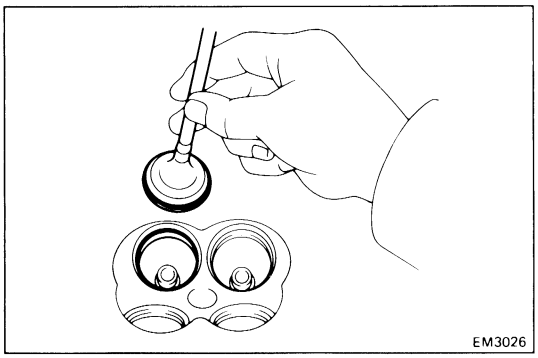

(b) Check the valve seating position.
Apply a thin coat of prussian blue (or white lead) to the valve face. Install the valve. Lightly press the valve against the seat. Do not rotate the valve.

(c) Check the valve face and seat for the following:
- If blue appears 360° around the face, the valve is concentric. If not, replace the valve.
- If blue appears 360° around the valve seat, the guide and seat are concentric. If not, resurface the seat.
- Check that the seat contact is on the middle of the valve face with the following width:

  1.0 — 1.4 mm (0.039 — 0.055 in.)

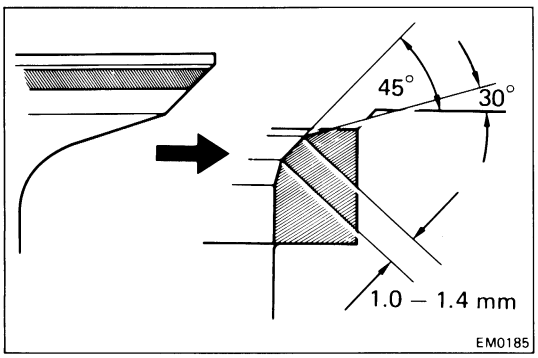

If not, correct the valve seat as follows:
- If seating is too high on the valve face use 30° and 45° cutters to correct the seat.

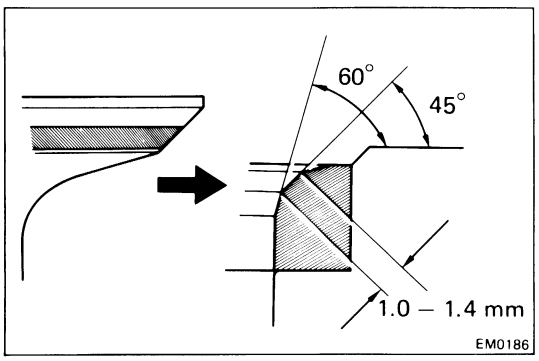

- If seating is too low on the valve face, use 60° and 45° cutters to correct the seat.

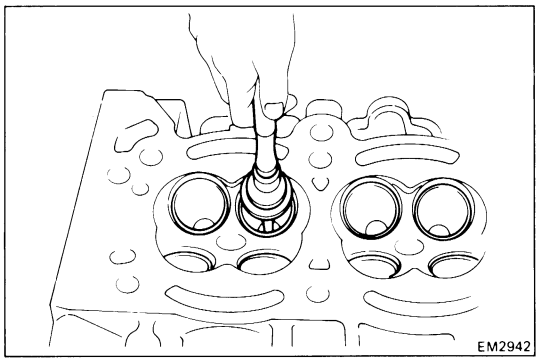

(d) Hand-lap the valve and valve seat with an abrasive compound.

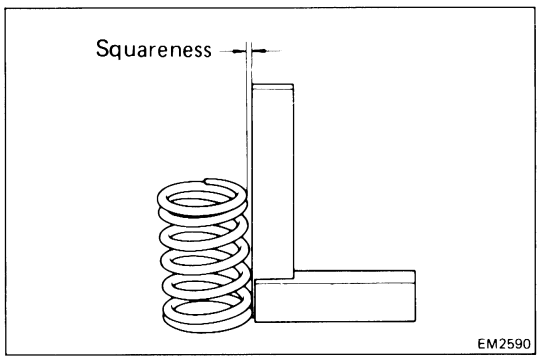

13. INSPECT VALVE SPRINGS

(a) Using a steel square, measure the squareness of the valve springs.

Maximum squareness: 1.5 mm (0.059 in.)

If squareness is greater than maximum, replace the valve spring.

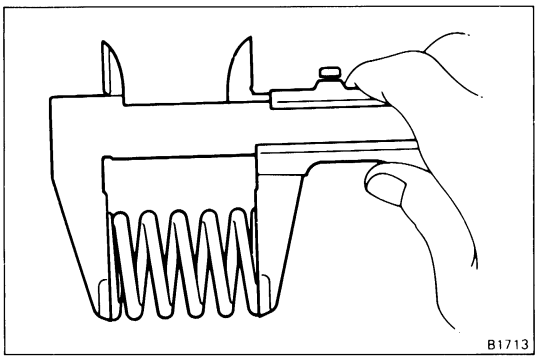

(b) Using calipers, measure the free length of the valve spring.

Free length: 41.64 mm (1.6394 in.)

If the free length is not within specification, replace the valve spring.

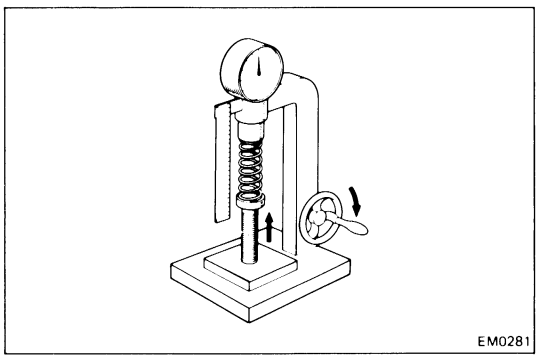

(c) Using a spring tester, measure the tension of the valve spring at the specified installed length.

Installed tension:
16.0 kg (35 lb, 157 N) at 35.0 mm (1.378 in.)

If the installed tension is not as specified, replace the valve spring.

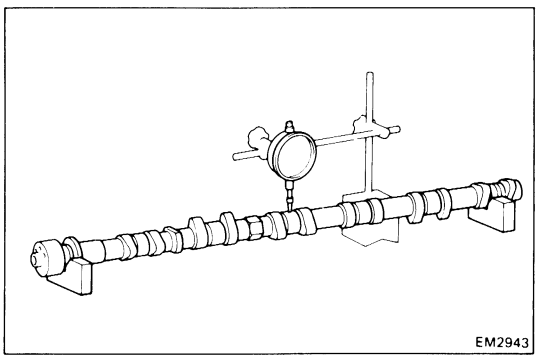

14. INSPECT CAMSHAFT AND BEARING CAPS

(a) Place the camshaft on V-blocks and, using a dial gauge, measure the circle runout at the center journal.

Maximum circle runout: 0.03 mm (0.0012 in.)

If the circle runout is greater than maximum, replace the camshaft.

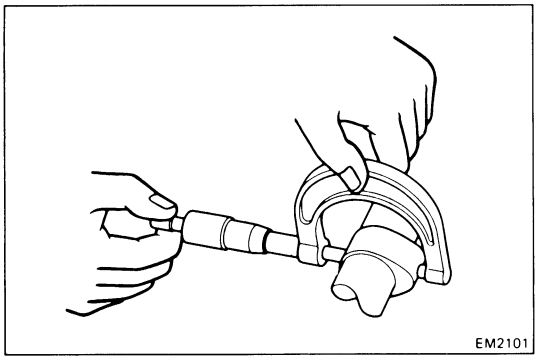

(b) Using a micrometer, measure the cam lobe height.

Standard cam lobe height:

Intake	**7M-GE**	**38.16 mm (1.5024 in.)**
	7M-GTE	**38.35 mm (1.5098 in.)**
Exhaust		**38.35 mm (1.5098 in.)**

Minimum cam lobe height:

Intake	**7M-GE**	**37.85 mm (1.4902 in.)**
	7M-GTE	**38.00 mm (1.4961 in.)**
Exhaust		**38.00 mm (1.4961 in.)**

If the cam lobe height is less than minimum, replace the camshaft.

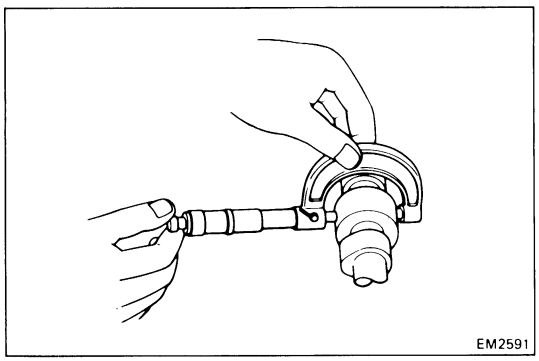

(c) Using a micrometer, measure the journal diameter.

Standard diameter:

No.1 journal
26.949 — 26.965 mm (1.0610 — 1.0616 in.)
No.2 — No.7 journals
26.888 — 26.975 mm (1.0586 — 1.0620 in.)

If the journal diameter is less than specified, replace the camshaft.

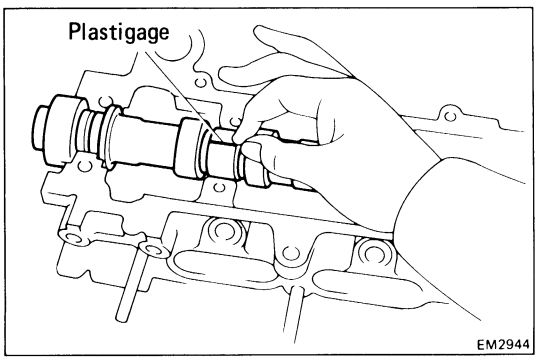

15. INSPECT CAMSHAFT OIL CLEARANCE

(a) Clean the bearing caps and camshaft journal.

(b) Place the camshaft in the cylinder head.

(c) Lay a strip of Plastigage across each journal.

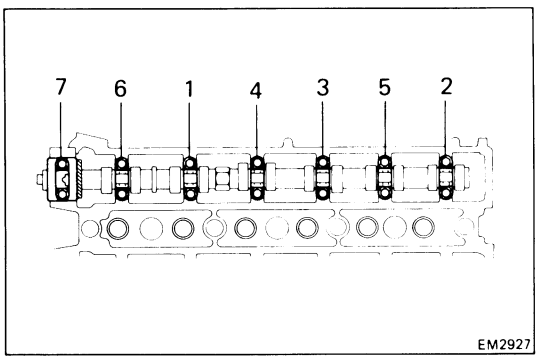

(d) Place the bearing caps with the top of the number on the cap pointing toward the front and in numerical order from the front side.

(e) Install and torque the cap bolts gradually in the sequence shown in the figure.

Torque: 200 kg-cm (14 ft-lb, 20 N·m)

HINT: Do not turn the camshaft while the Plastigage is in place.

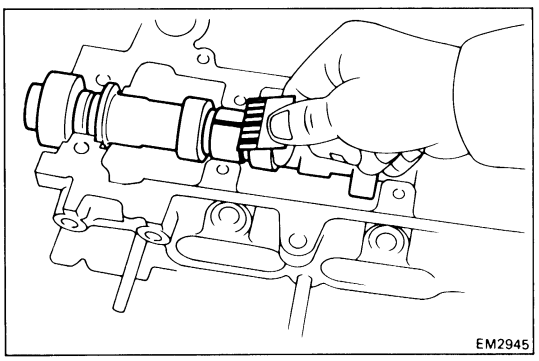

(f) Remove the caps and measure the Plastigage at its widest point.

Standard oil clearance:

No.1 journal
0.035 — 0.072 mm (0.0014 — 0.0028 in.)
No.2 — No.7 journals
0.025 — 0.093 mm (0.0010 — 0.0037 in.)

Maximum oil clearance: 0.13 mm (0.0051 in.)

If clearance is greater than maximum, replace the cylinder head and/or camshaft.

(g) Clean out the pieces of Plastigage from the bearing caps and journals.

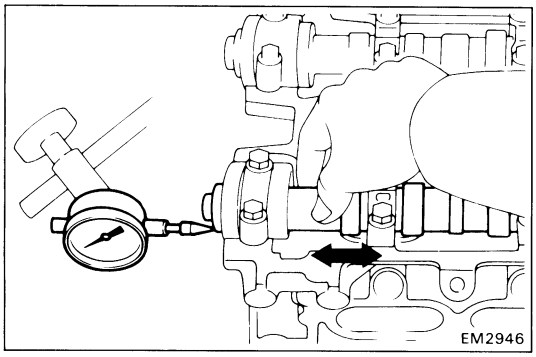

16. INSPECT CAMSHAFT THRUST CLEARANCE

(a) Clean and install the camshaft and bearing caps.

(b) Using a dial gauge, measure the thrust clearance while moving the camshaft back and forth.

Standard thrust clearance: 0.08 — 0.19 mm (0.0031 — 0.0075 in.)

Maximum thrust clearance: 0.30 mm (0.0118 in.)

If clearance is greater than maximum, replace the camshaft and/or cylinder head.

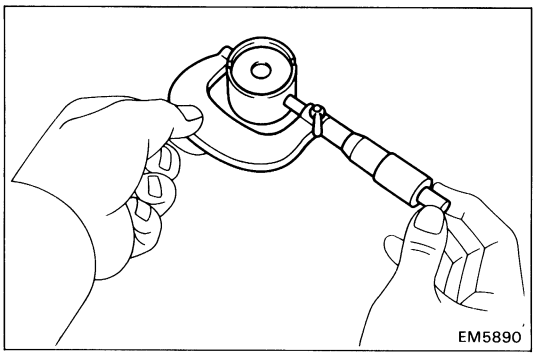

17. INSPECT VALVE LIFTER OIL CLEARANCE

(a) Using a micrometer, measure the diameter of the valve lifter.

Valve lifter diameter: 27.975 — 27.985 mm (1.1014 — 1.1018 in.)

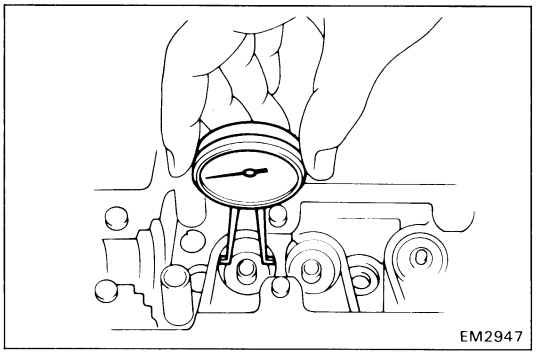

(b) Using a dial indicator, measure the inside diameter of the cylinder head bore.

Lifter bore diameter: 28.000 — 28.021 mm (1.1024 — 1.1032 in.)

(c) Subtract the valve lifter measurement from the cylinder head bore.

Standard oil clearance: 0.015 — 0.046 mm (0.0006 — 0.0018 in.)

Maximum oil clearance: 0.10 mm (0.0039 in.)

If clearance is greater than maximum, replace the cylinder head and/or valve lifter.

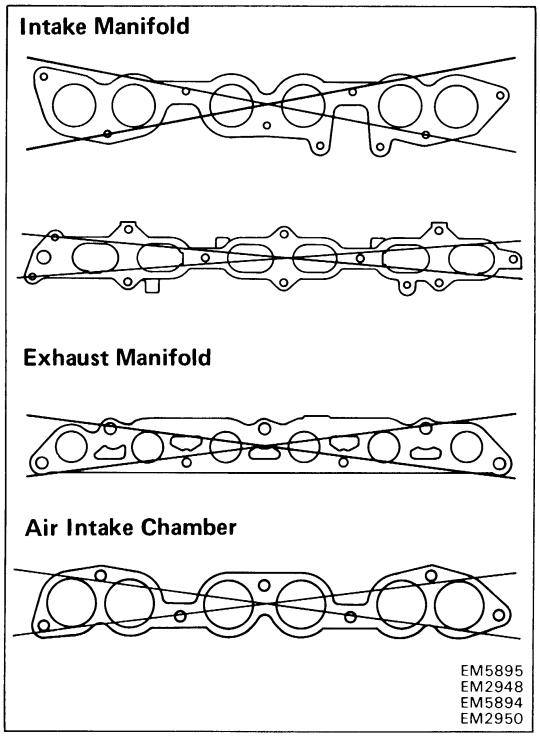

18. INSPECT INTAKE, EXHAUST MANIFOLDS AND AIR INTAKE CHAMBER

Using a precision straight edge and thickness gauge, check the surfaces contacting the cylinder head or intake manifold for warpage.

Maximum warpage:

Intake manifold		**0.10 mm (0.0039in.)**
Exhaust manifold	**7M-GE**	**0.75 mm (0.0295in.)**
	7M-GTE	**0.50 mm (0.0197in.)**
Intake chamber		**0.10 mm (0.0039in.)**

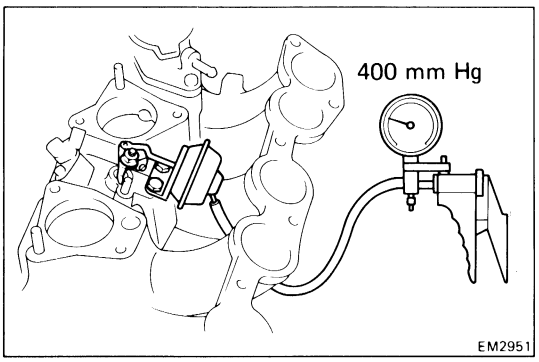

INSPECTION OF INTAKE AIR CONTROL SYSTEM (7M-GE only)

1. CHECK AIR CONTROL VALVE OPERATION

With 400 mmHg (15.75 in.Hg, 53.3 kPa) of vacuum applied to the actuator, check that the control valve moves smoothly to the fully closed position.

If not, adjust with the adjusting screw.

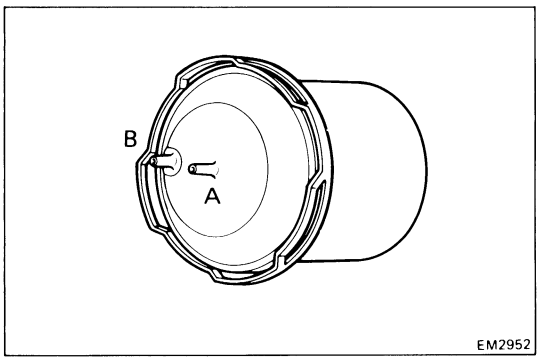

2. CHECK VACUUM TANK BY BLOWING AIR INTO EACH PIPE

(a) Check that air flows from pipe B to A.

(b) Check that air does not flow from pipe A to B.

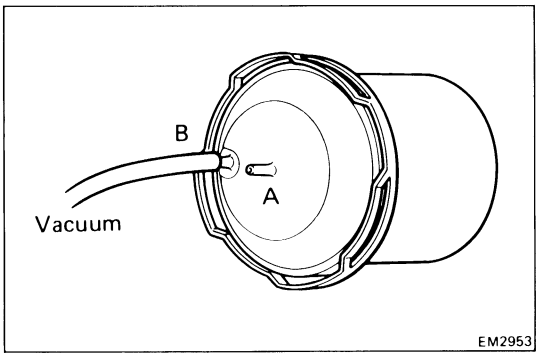

(c) Apply 500 mmHg (19.69 in.Hg, 66.7 kPa) of vacuum to pipe B and check that there is no change in vacuum after one minute.

If there is a change, replace the vacuum tank.

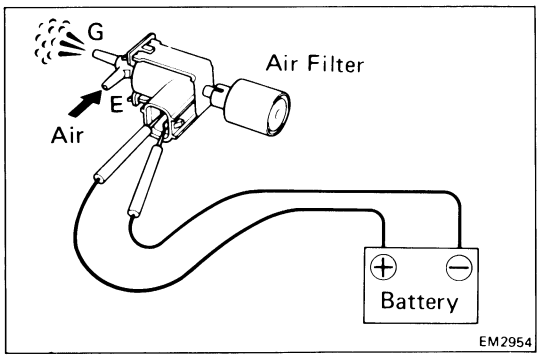

3. CHECK VACUUM CIRCUIT CONTINUITY IN THE VSV BY BLOWING AIR INTO PIPE

(a) Connect the VSV terminals to the battery terminals as illustrated.

(b) Blow air into pipe E and check that air comes out of pipe G.

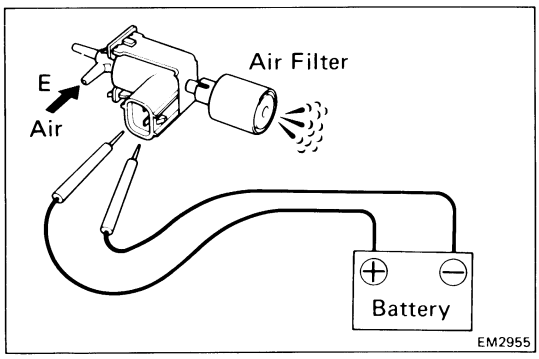

(c) Disconnect the battery.

(d) Blow air into pipe E and check that air comes out of the air filter.

If a problem is found, replace the VSV.

ASSEMBLY OF CYLINDER HEAD

(See pages EM-32, 43)

HINT:
- Thoroughly clean all parts to be assembled.
- Before installing the parts, apply new engine oil to all sliding and rotating surfaces.
- Replace all gaskets and oil seals with new ones.

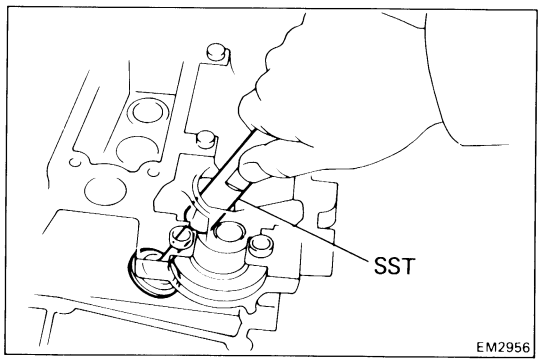

1. INSTALL VALVES

(a) Insert the valves in the cylinder head valve guide bushing. Make sure the valves are installed in correct order.

(b) Using SST, install new oil seals on the valve guide bushings.

SST 09201-41020

(c) Install spring seats, springs and spring retainers.

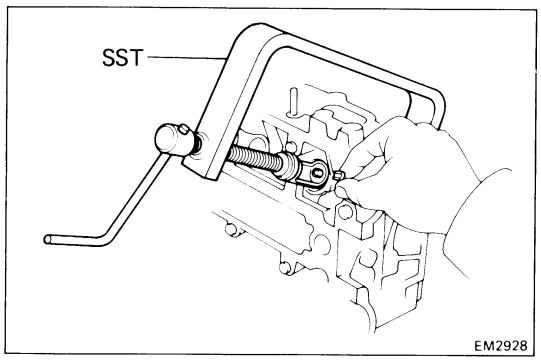

(d) Using SST, compress the valve retainers and place two keepers around the valve stem.

SST 09202-70010

(e) Tap the stem lightly to assure proper fit.

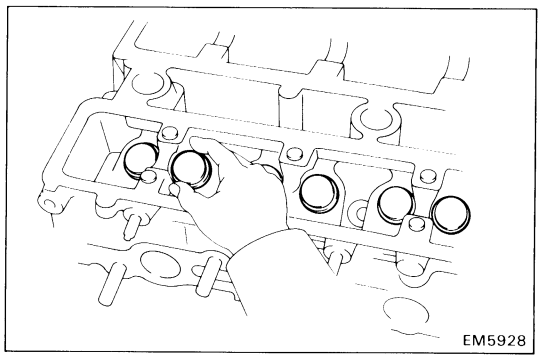

2. INSTALL VALVE LIFTERS WITH SHIMS

Check that the valve lifters rotates smoothly by hand.

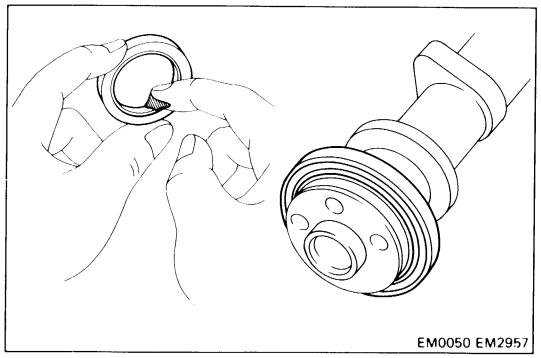

3. INSTALL CAMSHAFTS AND OIL SEALS

(a) Apply engine oil to the lip of a new oil seal.

(b) Install the oil seal to the camshaft.

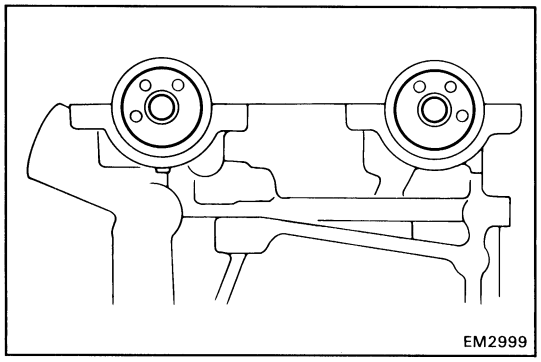

(c) Coat all bearing journals with engine oil.

(d) Place the camshafts on the cylinder head as shown in the illustration.

HINT: The exhaust camshaft has a distributor (7M-GE) or cam position sensor (7M-GTE) drive gear.

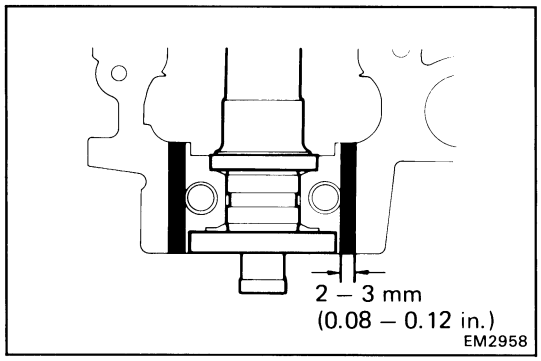

(e) Apply seal packing to the areas indicated in the illustration.

Seal packing: Part No.08826-00080 or equivalent

HINT: Install the No.1 bearing cap immediately after applying the seal packing.

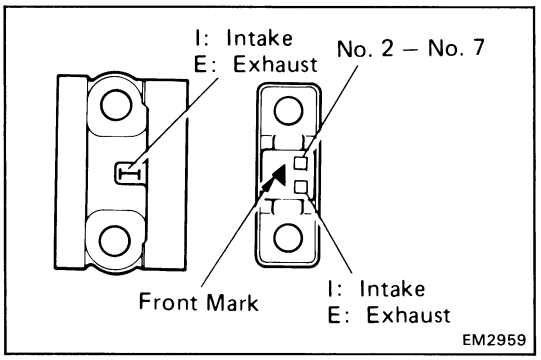

(f) Place bearing caps on each journal with the front marks pointing toward the front and in numerical order from the front side.

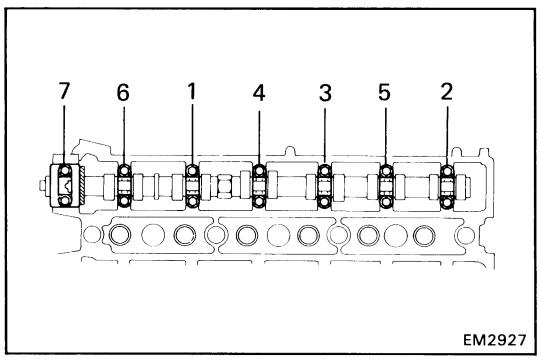

(g) Temporarily install the bearing cap bolts in the several passes in the sequence shown.

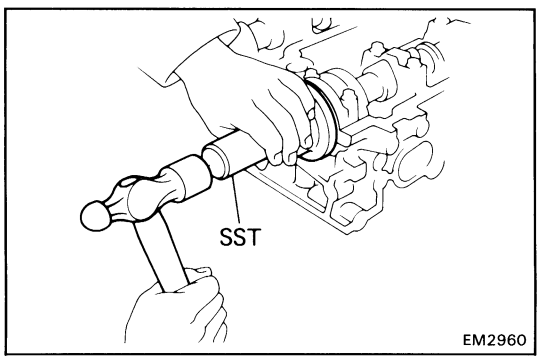

(h) Using SST, tap in the camshaft oil seal.

SST 09223-50010

HINT: Be careful not to install the oil seal slantwise.

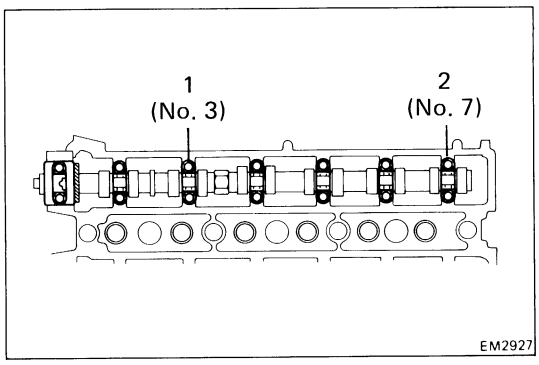

(i) Uniformily tighten the No.3 and No.7 bearing cap bolts in several passes, in the sequence shown.

Torque: 200 kg-cm (14 ft-lb, 20 N·m)

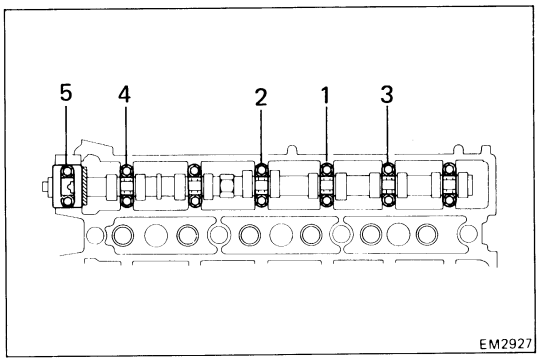

(j) Uniformily tighten other bearing cap bolts in several passes, in the sequence shown.

Torque: 200 kg-cm (14 ft-lb, 20 N·m)

(k) Check the camshaft thrust clearance.

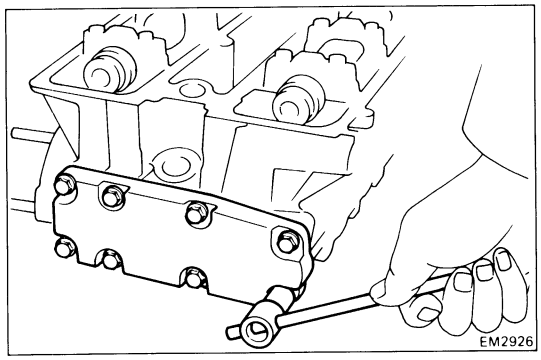

4. INSTALL EGR COOLER

Install a new gasket and EGR cooler with the eight bolts.

Torque: 140 kg-cm (10 ft-lb, 14 N·m)

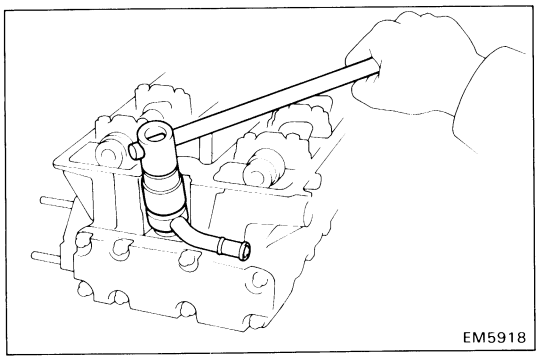

5. INSTALL HEATER UNION

Install a new gasket, union, another gasket and union bolt to the cylinder head. Torque the union bolt.

Torque: 600kg-cm (43 ft-lb, 59 N·m)

6. INSTALL NO.2 ENGINE HANGER AND GROUND STRAP

Torque: 400 kg-cm (29 ft-lb, 39 N·m)

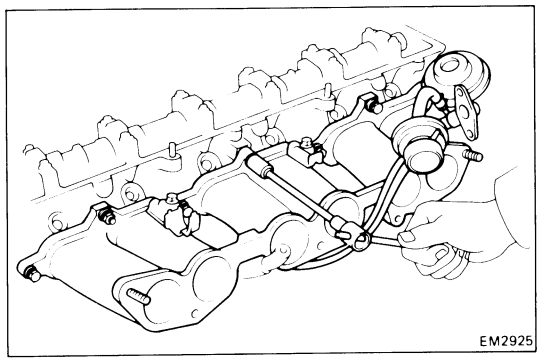

7. INSTALL INTAKE MANIFOLD

(a) Position a new gasket on the cylinder head.

(b) Install the intake manifold and VSV with the two nuts and seven bolts.

(c) Install the EGR valve with the two nuts.

(d) Torque the bolts and nuts.

Torque: 180 kg-cm (13 ft-lb, 18 N·m)

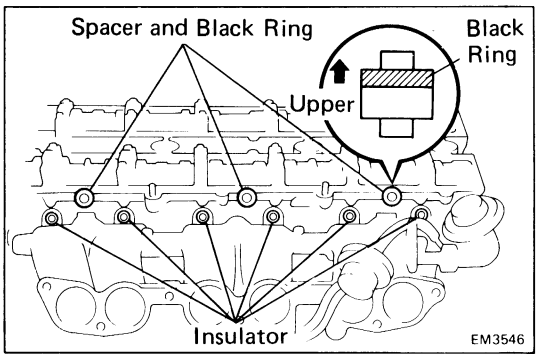

8. INSTALL DELIVERY PIPE WITH INJECTORS

(a) Install the six insulators into the injector hole of the cylinder head.

(b) Install the black rings on the upper portion of each of the three spacers. Then install the spacers on the delivery pipe mounting hole of the cylinder head.

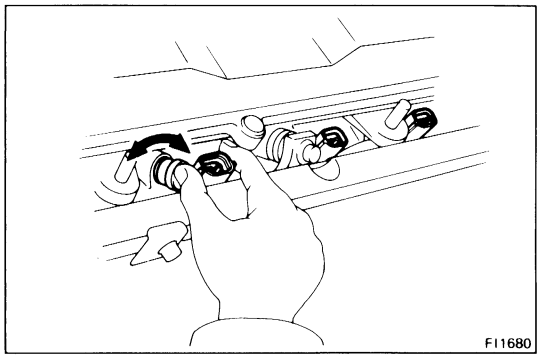

(c) Place the injectors together with the delivery pipe on the cylinder head.

(d) Make sure that the injectors rotate smoothly.

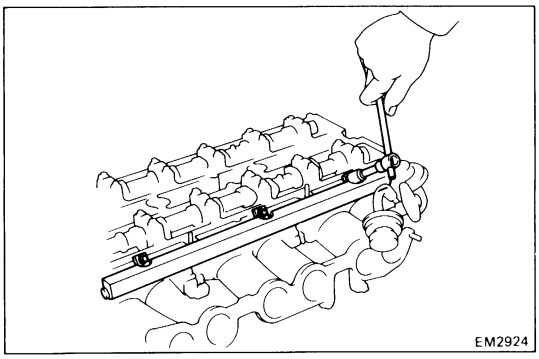

(e) Install the three thinner spacers and bolts. Torque the bolts.

Torque: 180 kg-cm (13 ft-lb, 18 N·m)

9. INSTALL ALTERNATOR BRACKET

Torque: 400 kg-cm (29 ft-lb, 39 N·m)

10. INSTALL NO.2 TIMING BELT COVER

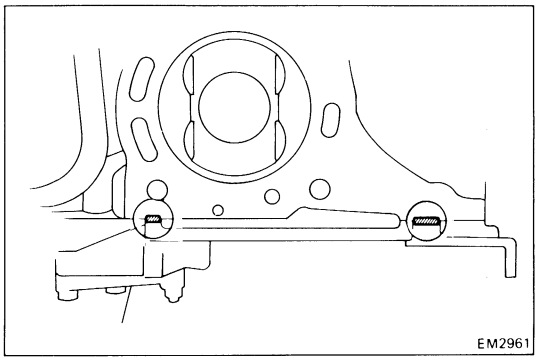

INSTALLATION OF CYLINDER HEAD

(See pages EM-32, 33)

1. INSTALL CYLINDER HEAD

(a) Apply seal packing to the two locations shown.

Seal packing: Part No. 08826-00080 or equivalent

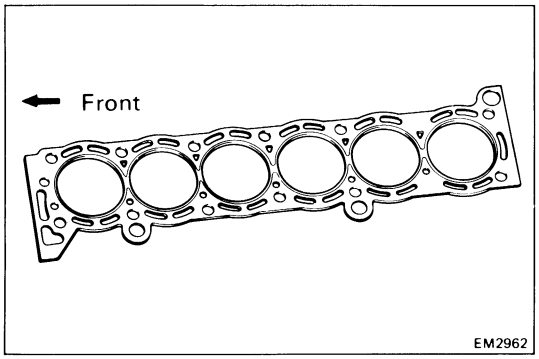

(b) Place a new cylinder head gasket on the cylinder block.

NOTICE: Be careful of the installation direction.

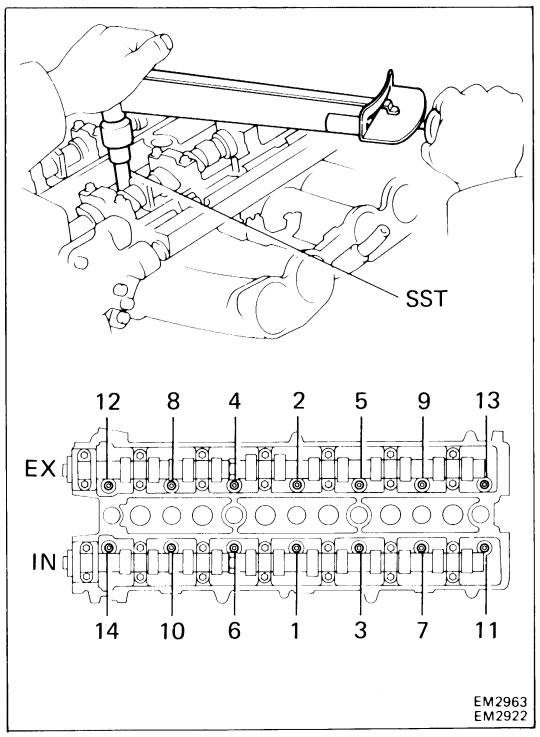

(c) Place the cylinder head on the cylinder head gasket, and connect the No.5 water by-pass hose to the union.

(d) Apply a light coat of the engine oil on the threads and under the cylinder head bolts.

(e) Using SST, install and uniformily tighten the fourteen cylinder head bolts in several passes and in the sequence shown.

SST 09043-38100

Torque: 800 kg-cm (58 ft-lb, 78 N·m)

2. INSTALL CAMSHAFT TIMING PULLEYS AND TIMING BELT

(See steps 8 to 11, and 14 on pages EM-29 to 31)

3. INSTALL SPARK PLUGS

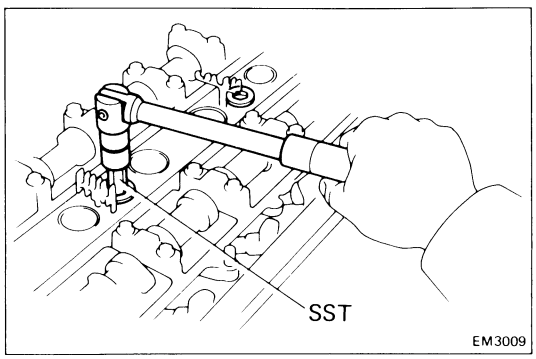

4. INSTALL CYLINDER HEAD COVERS

(a) Using SST, install the No.3 cylinder head cover.

SST 09923-00010

Torque: 180 kg-cm (13 ft-lb, 18 N·m)

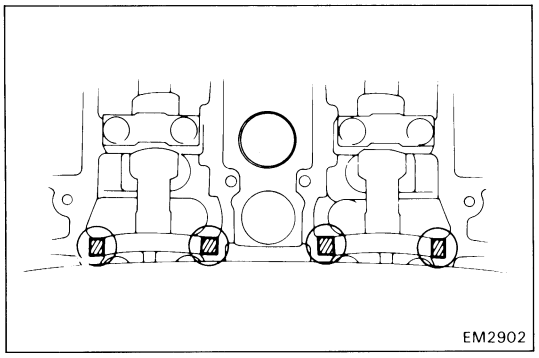

(b) Apply seal packing to the cylinder head as shown in the illustration.

Seal packing: Part No. 08826-00080 or equivalent

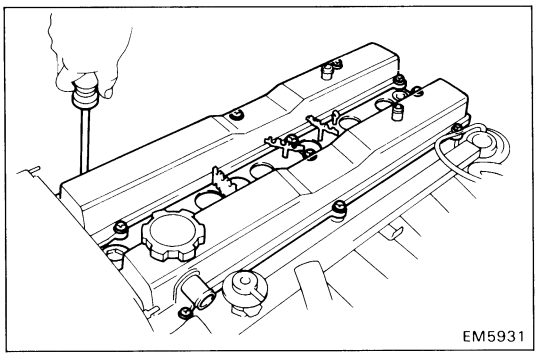

(c) Install the No.1 and No.2 cylinder head covers.

Torque: 25 kg-cm (22 in.-lb, 2.5 N·m)

(d) Install the heater hose clamp.

(e) Install the accelerator link.

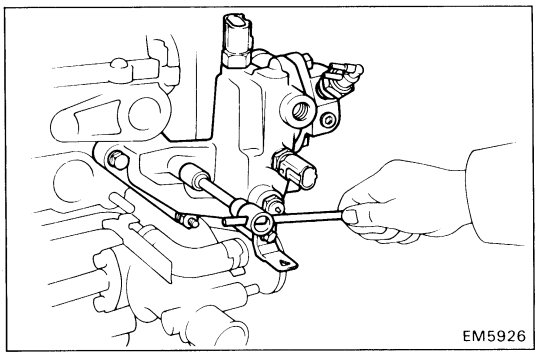

5. INSTALL WATER OUTLET HOUSING

(a) Install a new gasket and water outlet housing with the bolt and two nuts.

(b) Connect the No.6 water by-pass hose.

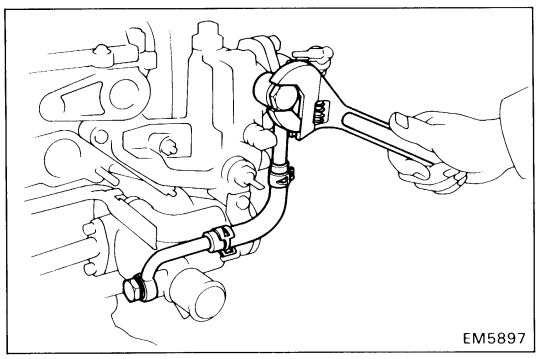

(c) (7M-GE)
Install unions with No.4 water by-pass hose to the water outlet housing with new gaskets and union bolts.

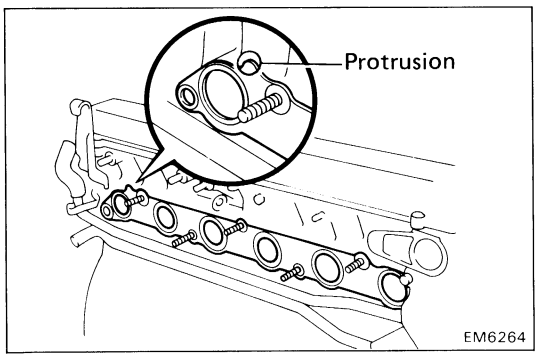

6. INSTALL EXHAUST MANIFOLD

(a) Face a new exhaust gasket so the protrusion is facing the rear and install on the cylinder head.

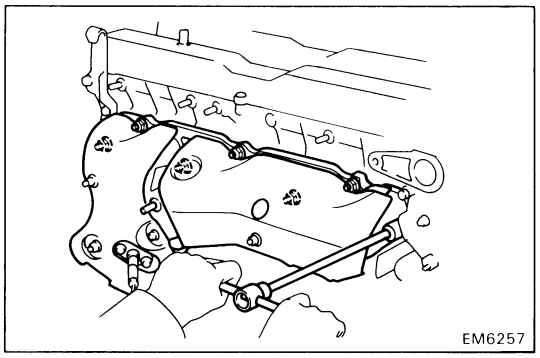

(b) Install the exhaust manifold with the seven nuts.

Torque: 400 kg-cm (29 ft-lb, 39 N·m)

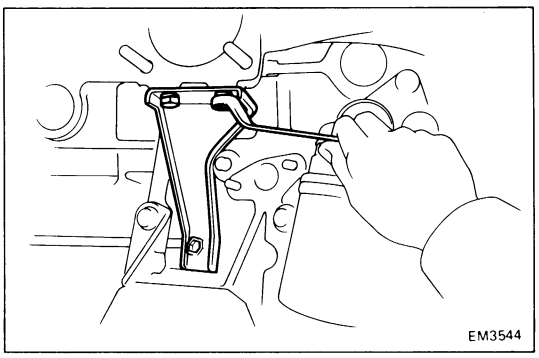

(c) (7M-GTE)
Install the exhaust manifold stay with the three bolts.

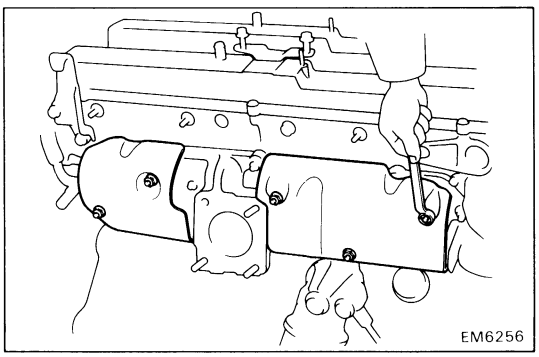

(d) (7M-GTE)
Install the heat insulators with the five bolts.

7. **(7M-GTE)**
INSTALL TURBOCHARGER
(See steps 4 to 8 and 10 to 12 on pages TC-15 to 18)

8. **(7M-GE)**
INSTALL OIL DIPSTICK

9. **(7M-GE)**
INSTALL DISTRIBUTOR AND HIGH-TENSION CORDS
(See page IG-19)

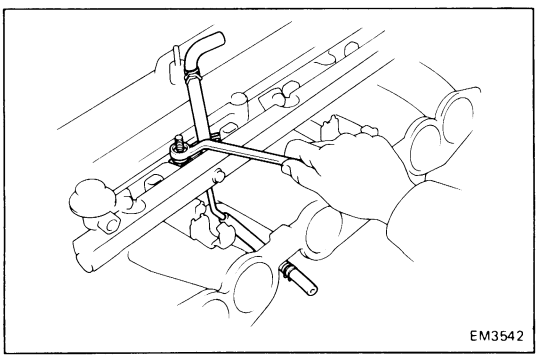

10. **(7M-GTE)**
INSTALL AUXILIARY AIR PIPE

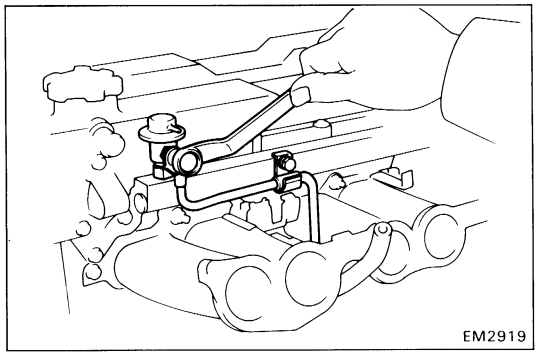

11. INSTALL NO.2 FUEL PIPE

(a) Install a new gasket, No.2 fuel pipe, another gasket and union bolt to the pressure regulator.

Torque: 250 kg-cm (18 ft-lb, 25 N·m)

(b) Install the No.2 fuel pipe to the delivery pipe with the bolt.

(c) Connect the fuel hose to fuel return pipe support.

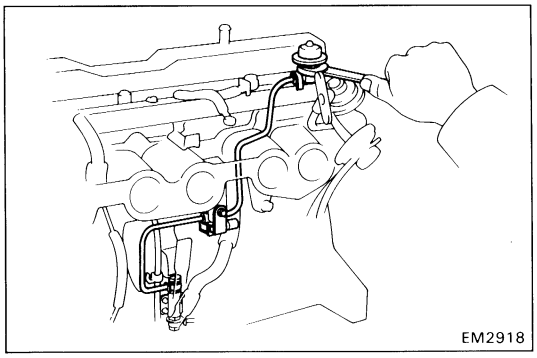

12. INSTALL NO.1 FUEL PIPE

(a) Install the No.1 fuel pipe with VSV with the clamp bolt.

(b) Connect the pipe to the fuel pipe support with the union bolt and new gaskets. Torque the union bolt.

Torque: 300 kg-cm (22 ft-lb, 29 N·m)

(c) Connect the pipe to the delivery pipe with the union bolt (7M-GE) or pulsation damper (7M-GTE) and new gaskets. Torque the union bolt or pulsation damper.

Torque: 400 kg-cm (29 ft-lb, 39 N·m)

13. INSTALL ENGINE WIRE

(a) Install the engine wire to the four clamps.

(b) Connect the following connectors and wire:

- Transmission connectors
- Starter connector (Terminal 50)
- Main relay connector
- Noise filter connector
- (7M-GE)
  Ignition coil connector
- (7M-GTE)
  Igniter connectors
- (7M-GTE)
  Solenoid resister connector
- Check connector
- Ground strap to intake manifold
- Knock sensor connector
- Two VSV connectors
- Injector connectors
- (7M-GE)
  Distributor connector
- Cold start injector time switch connector
- Water temp. sender gauge connector
- Water temp. sensor connector
- Oil pressure sender gauge connector
- Oxygen sensor connector

14. (7M-GTE)
INSTALL IGNITION COIL WITH BRACKET
(See steps 13, 14 on pages EM-13, 14)

15. INSTALL AIR INTAKE CHAMBER WITH CONNECTOR

(a) Position a new gasket on the intake manifold.

(b) (7M-GTE)
Connect the cold start injector connector.

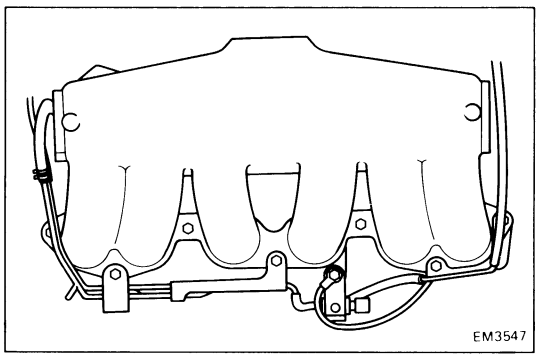

(c) Install the intake chamber with connector and vacuum transmitting pipes with the two nuts and five bolts.

Torque: 180 kg-cm (13 ft-lb, 18 N·m)

(d) Connect the engine wire to the clamps of the intake chamber.

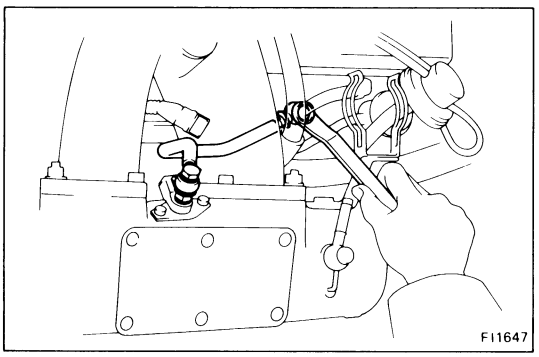

(e) Install new gaskets and cold start injector tube.

Torque: To delivery pipe
300 kg-cm (22 ft-lb, 29 N·m)
To cold start injector
180 kg-cm (13 ft-lb, 18 N·m)

(f) Install the EGR vacuum modulator to the bracket.

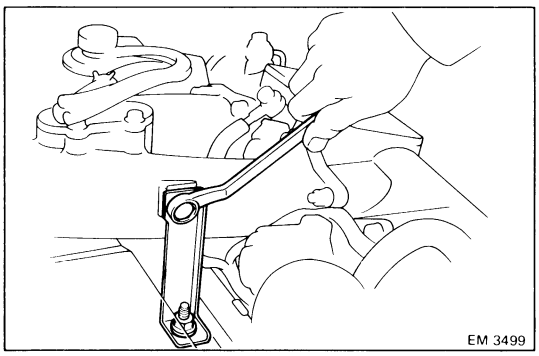

(g) (7M-GE)
Install the air intake connector bracket mounting bolts.

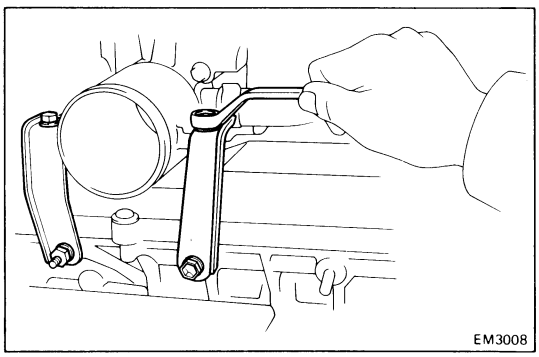

(h) (7M-GE)
Install the throttle body brackets.

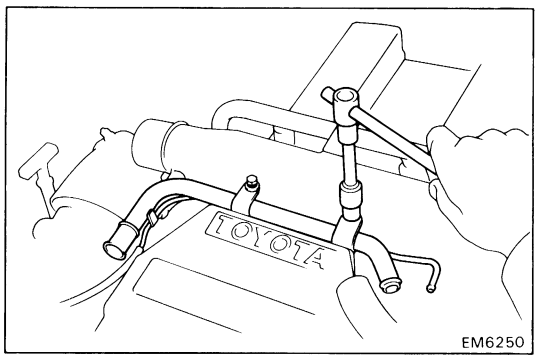

(i) (7M-GTE)
Install the ISC pipe and connect the hoses.

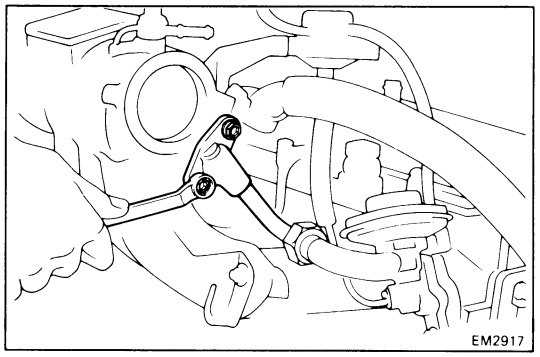

(j) Install the EGR pipe mounting bolts.

(k) Install the manifold stay mounting bolt.

(l) Connect the following hoses:
- (7M-GE)
  No.3 water by-pass hose to throttle body
- (7M-GTE)
  No.3 water by-pass hose to water by-pass pipe
- No.1 water by-pass hose to union of cylinder block
- (7M-GTE)
  Auxiliary air pipe hose to vacuum transmitting pipe
- (7M-GE)
  Diaphragm hose
- (7M-GTE)
  VSV hoses (for FPU)
- PS air hose
- Pressure regulator hose
- Vacuum transmitting pipe hose to intake chamber
- EGR hoses to throttle body and vacuum transmitting pipe.
- BVSV hose to throttle body

(m) Connect the following wires:
- ISC valve connector
- Throttle position sensor connector
- (7M-GE)
  Cold start injector connector

(n) Install the PCV pipe.

16. (7M-GTE)
INSTALL CAM POSITION SENSOR
(See steps 1, 2 on page IG-24)

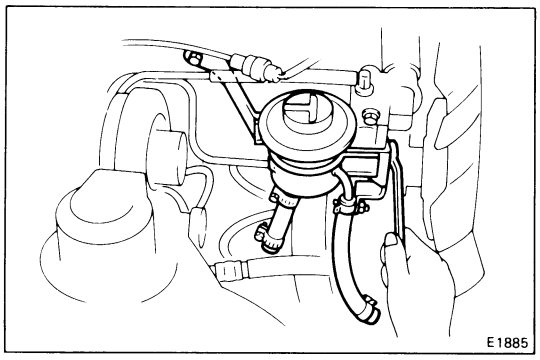

17. (7M-GTE)
INSTALL PS RESERVOIR TANK

Install the PS reservoir tank with bracket.

18. **INSTALL ALTERNATOR AND ADJUSTING BAR**
    (a) Install the alternator and adjusting bar.
    (b) Install the drive belt.
    (See page MA-6)
    (c) Connect the No.3 PCV pipe.

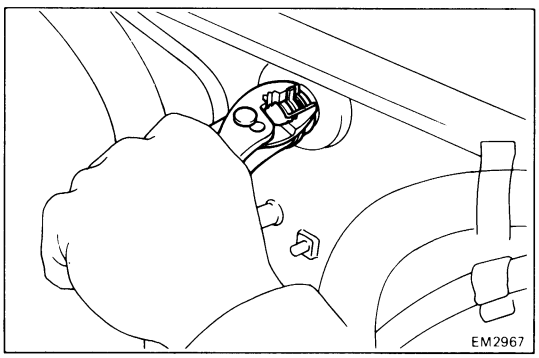

19. **CONNECT HEATER INLET HOSE**

20. **INSTALL RADIATOR INLET HOSE**

21. **CONNECT FOLLOWING HOSES:**
    (a) Charcoal canister hose
    (b) Cruise control vacuum hose
    (c) Brake booster hose

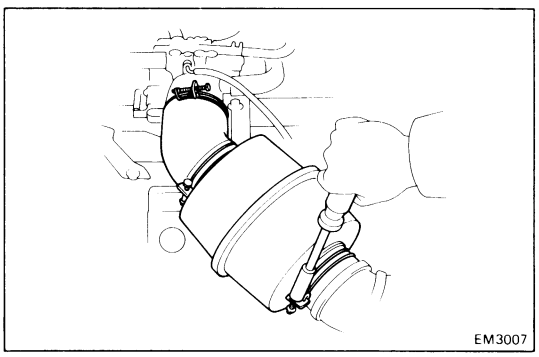

22. (7M-GE)
INSTALL NO.1 AIR CLEANER HOSE WITH INTAKE AIR CONNECTOR PIPE

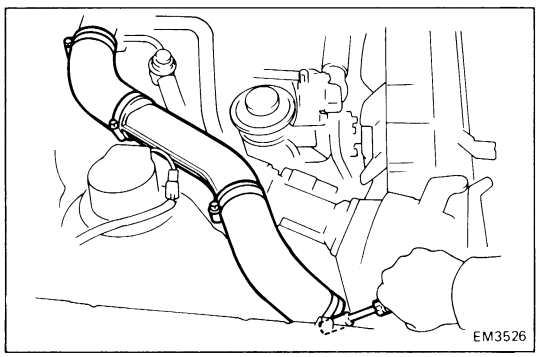

(7M-GTE)
INSTALL NO.4 AIR CLEANER PIPE WITH NO.1 AND NO.2 AIR CLEANER HOSES

23. **CONNECT GROUND STRAP TO ENGINE REAR SIDE**

24. **CONNECT FOLLOWING CABLES AND ROD:**
    (a) (A/T)
    Throttle cable
    (b) Accelerator rod
    (c) Accelerator link w/ cable

25. CONNECT EXHAUST PIPE TO EXHAUST MANIFOLD

26. FILL WITH COOLANT
(See page CO-5)

27. CONNECT CABLE TO NEGATIVE TERMINAL OF BATTERY

28. START ENGINE

Warm up the engine and check for leaks.

29. PERFORM ENGINE ADJUSTMENT

Recheck the ignition timing.

30. ROAD TEST

Road test vehicle.

31. RECHECK COOLANT AND ENGINE OIL LEVELS

CYLINDER BLOCK

COMPONENTS

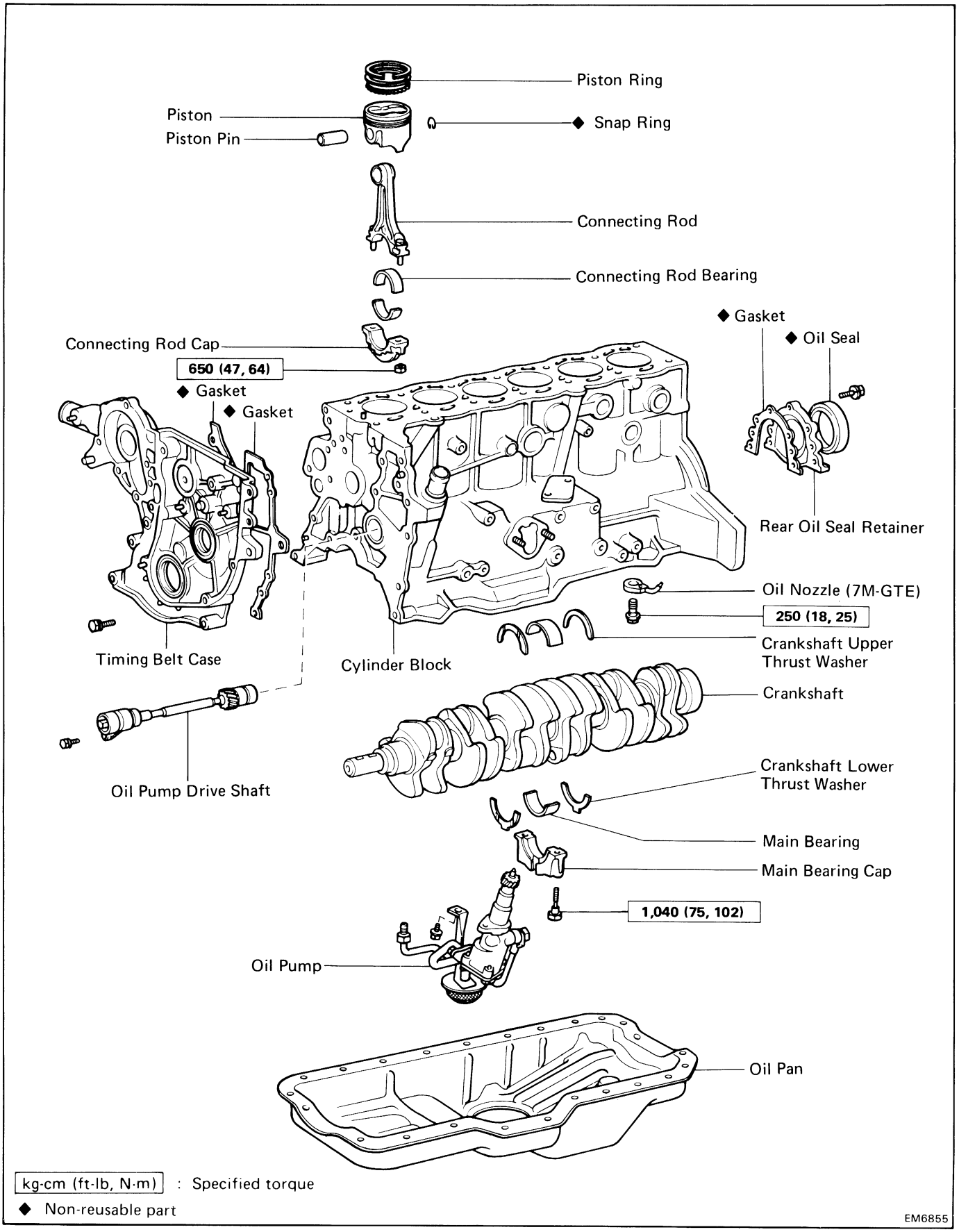

kg-cm (ft-lb, N·m) : Specified torque

◆ Non-reusable part

EM6855

REMOVAL OF ENGINE

1. **REMOVE HOOD**

2. **DISCONNECT CABLE FROM NEGATIVE TERMINAL OF BATTERY**

   CAUTION: Work must be started after approx. 20 seconds or longer from the time the ignition switch is turned to the "LOCK" position and the negative (−) terminal cable is disconnected from the battery.

3. **REMOVE ENGINE UNDER COVER**

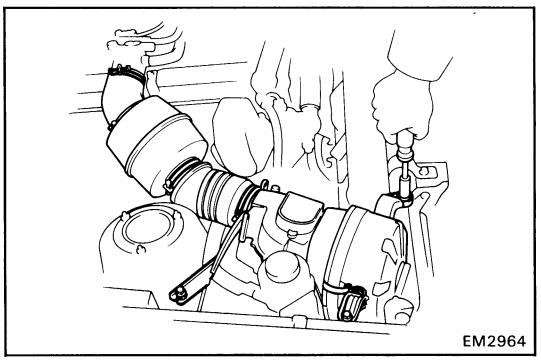
EM2964

4. **DRAIN COOLANT FROM RADIATOR AND CYLINDER BLOCK**
   (See page CO-5)

5. **DRAIN ENGINE OIL**

6. **(7M-GE)**
   REMOVE AIR CLEANER CASE WITH HOSES
   (a) Disconnect the air flow meter connector.
   (b) Disconnect the PS air hose.
   (c) Remove the three bolts and air cleaner case with hoses.

   (7M-GTE)
   REMOVE NO.4 AIR CLEANER PIPE WITH NO.1 AND NO.2 AIR CLEANER HOSES

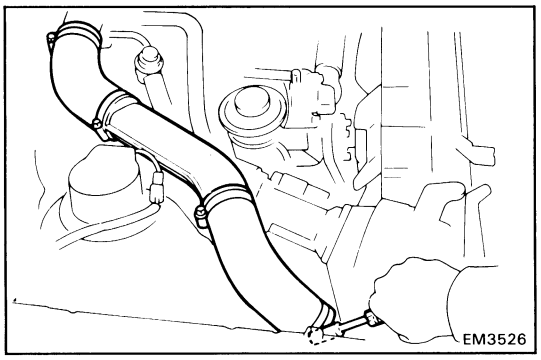
EM3526

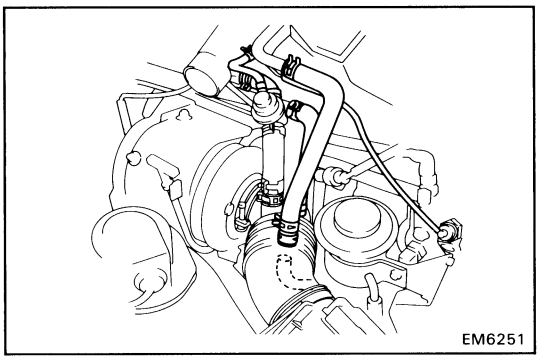
EM6251

7. **REMOVE NO.7 AIR CLEANER HOSE WITH AIR FLOW METER AND AIR CLEANER CAP**
   (a) Disconnect the three air hoses and PCV hose.
   (b) Disconnect the air flow meter connector.
   (c) Disconnect the PS air hose.

8. **REMOVE RADIATOR**
   (See page CO-9)

9. **REMOVE A/C BELT**

10. **REMOVE ALTERNATOR DRIVE BELT, WATER PUMP PULLEY AND FLUID COUPLING**

11. **REMOVE PS BELT**

12. **DISCONNECT FOLLOWING HOSES:**
    (a) Brake booster hose
    (b) Heater valve hose
    (c) Cruise control hose
    (d) Charcoal canister hose

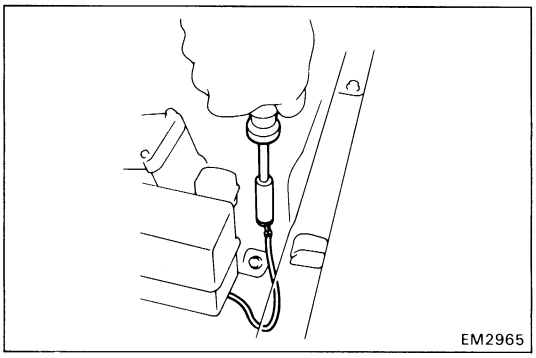
EM2965

13. DISCONNECT FOLLOWING CONNECTORS AND WIRES:

(a) Ground strap from LH front fender apron

(b) Battery positive cable from battery

(c) Noise filter connector

(d) Theft deterrent horn connector

(e) Check connector

(f) (7M-GTE)
Solenoid resister connector

(g) (7M-GT)
Ignition coil connector
(7M-GTE)
Igniter connectors

(h) Main relay connector

(i) Alternator connector and wire

(j) (7M-GE)
Oxygen sensor connector

(k) Heater valve connector

(l) Ground strap from engine rear side

(m) Engine and ECT connectors

14. DISCONNECT FOLLOWING CABLES:

(a) Cruise control cable

(b) Accelerator cable

(c) (A/T)
Throttle cable

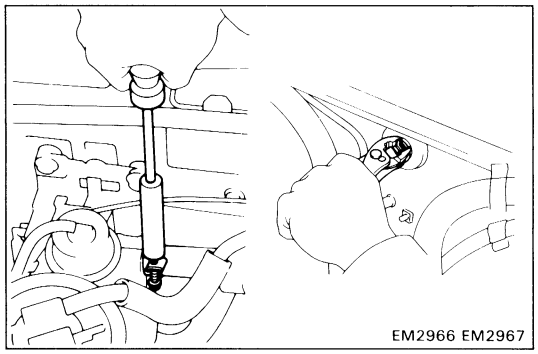
EM2966 EM2967

15. DISCONNECT HEATER HOSES

16. REMOVE A/C COMPRESSOR WITHOUT DISCONNECTING HOSES

17. (7M-GTE)
REMOVE NO.6 AIR CLEANER HOSE

18. (7M-GTE)
REMOVE RADIATOR OUTLET HOSE

19. REMOVE PS PUMP WITHOUT DISCONNECTING HOSES

20. (M/T)
REMOVE SHIFT LEVER

21. DISCONNECT GROUND STRAP FROM FUEL HOSE CLAMP

22. (7M-GTE)
REMOVE ENGINE MOUNTING ABSORBER

23. DISCONNECT FUEL PIPES

24. REMOVE EXHAUST PIPE

25. REMOVE PROPELLER SHAFT
(See page PR-3)

26. DISCONNECT SPEEDOMETER CABLE

27. (A/T)
REMOVE MANUAL SHIFT LINKAGE

28. REMOVE NO.1 FRONT CROSS MEMBER

29. (M/T)
REMOVE CLUTCH RELEASE CYLINDER

30. PLACE JACK UNDER TRANSMISSION

Be sure to put a wooden block between the jack and the transmission oil pan to prevent damage.

31. INSTALL A WOODEN BLOCK BETWEEN COWL PANEL AND CYLINDER HEAD REAR END TO PREVENT DAMAGE TO HEATER HOSE

32. REMOVE ENGINE REAR SUPPORT MEMBER WITH GROUND STRAP FROM BODY

33. REMOVE ENGINE WITH TRANSMISSION

(a) Attach the engine hoist chain to the two engine hangers.

(b) Remove the mounting nuts and washers.

(c) Lift the engine with transmission out of the vehicle slowly and carefully.

HINT: Make sure the engine is clear of all wiring and hoses.

34. PLACE ENGINE ON TO ENGINE STAND

35. (A/T)
REMOVE A/T OIL COOLER PIPES

36. REMOVE TRANSMISSION

37. (7M-GE)
REMOVE CLUTCH COVER AND DISC
(See page CL-11)

DISASSEMBLY OF CYLINDER BLOCK

(See page EM-63)

1. **REMOVE FLYWHEEL OR DRIVE PLATE AND REAR END PLATE**

2. **INSTALL ENGINE STAND FOR DISASSEMBLY**

3. **REMOVE TIMING BELT**
   (See steps 3, 7, 9 and 11 to 17 on pages EM-22 to 25)

4. **REMOVE CYLINDER HEAD**
   (See steps 1 to 15 and 18 on pages EM-35 to 39)

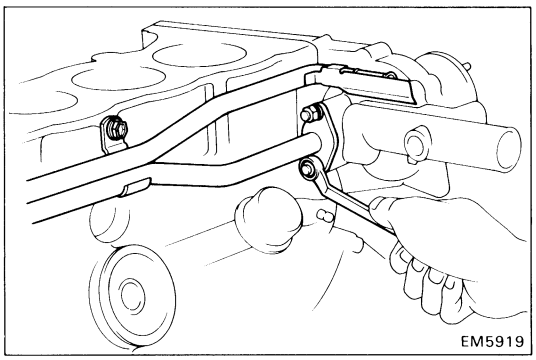

5. **REMOVE WATER BY-PASS PIPE AND HOSES**
   (a) Remove the two nuts from the timing belt case.
   (b) Remove the three bolts from the cylinder block and the water by-pass pipe and hose with gasket.

6. **REMOVE GROUND STRAP FROM CYLINDER BLOCK**

7. **(7M-GE)**
   REMOVE VACUUM CONTROL VALVE SET

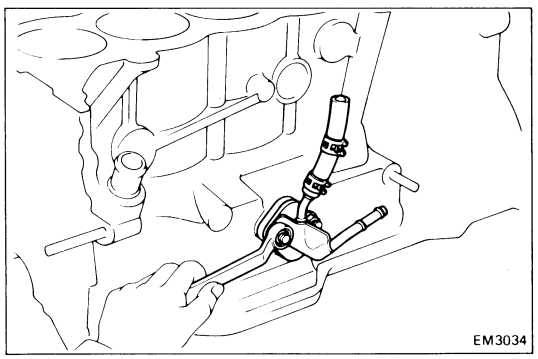

8. **REMOVE FUEL RETURN PIPE SUPPORT**
   Remove the two nuts, fuel pipe support and insulator.

9. **REMOVE ENGINE MOUNTING BRACKETS**

10. **(7M-GE)**
    REMOVE OIL FILTER
    (See page LU-5)
    (7M-GTE)
    REMOVE OIL FILTER BRACKET
    (See step 4 on page LU-16)

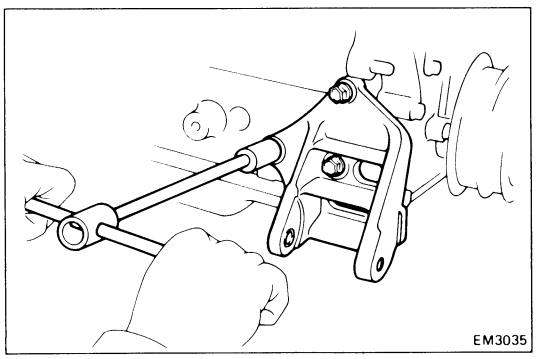

11. **(7M-GE)**
    REMOVE OIL HOLE COVER PLATE

12. **REMOVE PS PUMP BRACKET**

13. **REMOVE OIL PAN**
    (See step 15 on page LU-9)

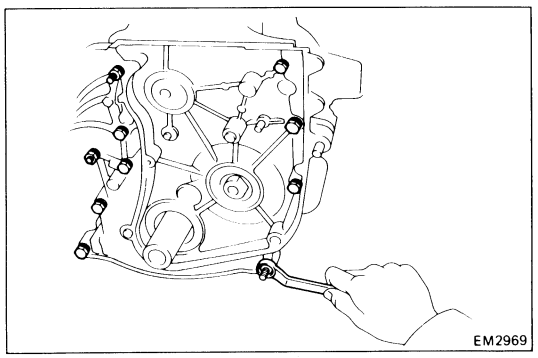

14. **REMOVE TIMING BELT CASE WITH WATER PUMP**
    Remove the seven bolts and three nuts, and remove the timing belt case and gaskets.

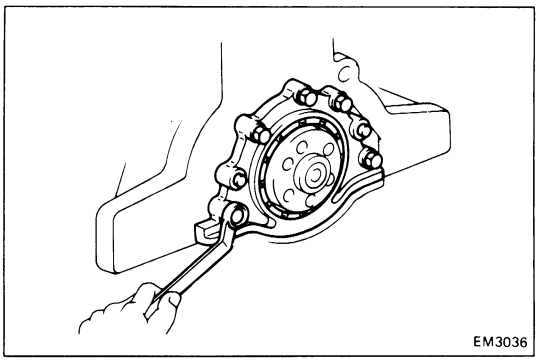

15. REMOVE REAR OIL SEAL RETAINER

Remove the five bolts, and remove rear oil seal retainer and gasket.

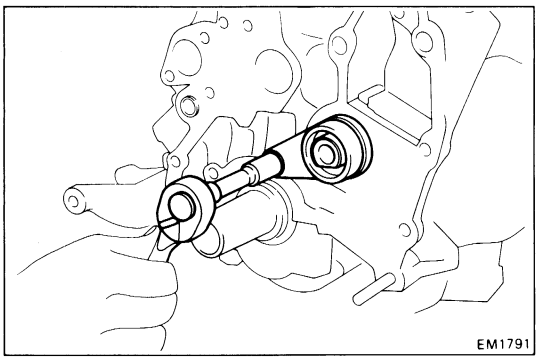

16. REMOVE OIL PUMP DRIVE SHAFT

(a) Remove the bolt and oil pump drive shaft.

(b) While turning oil pump drive shaft, slowly pull out so as not to damage the bearing.

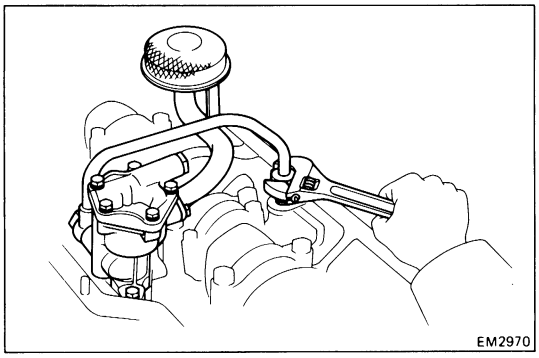

17. REMOVE OIL PUMP

(a) Loosen the union nut.

(b) Remove the two bolts, and remove the oil pump.

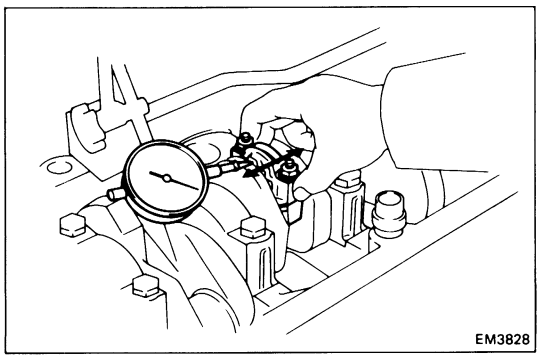

18. CHECK CONNECTING ROD THRUST CLEARANCE

Using a dial gauge, measure the thrust clearance.

Standard clearance: **0.160 – 0.296 mm (0.0063 – 0.0017 in.)** 0.0171

Maximum clearance: **0.3 mm (0.012 in.)** (wear).

If clearance is greater than maximum, replace the connecting rod and/or crankshaft.

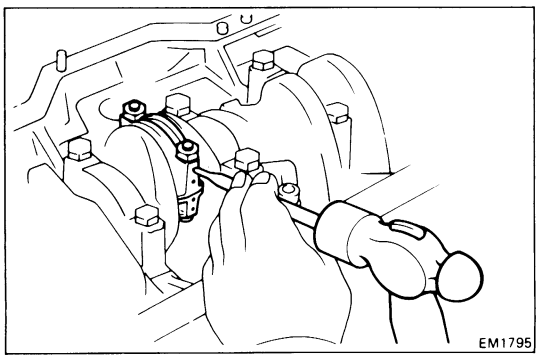

19. REMOVE CONNECTING ROD CAPS AND CHECK OIL CLEARANCE

(a) Using a punch or numbering stamp, place matchmarks on the connecting rod and cap to ensure correct reassembly.

(b) Remove the rod cap nuts.

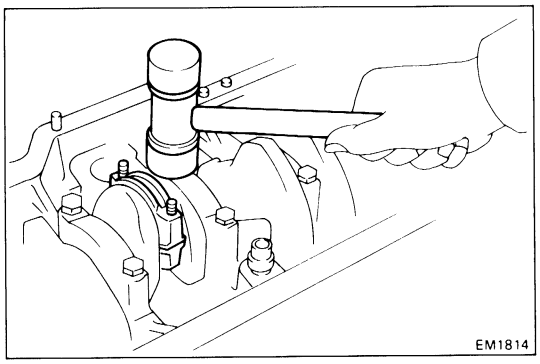

(c) Using a plastic-faced hammer, tap the rod bolts lightly and lift off the rod cap.

HINT: Keep the lower bearing inserted with the cap.

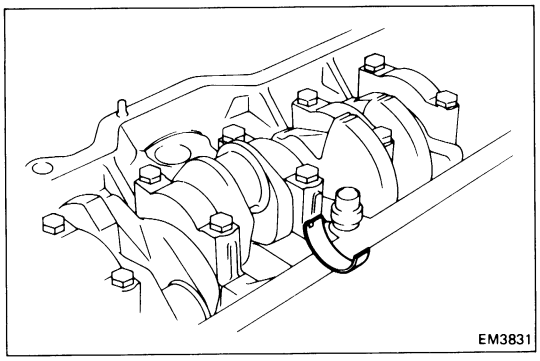

(d) Clean the bearings and crankshaft pins.

(e) Inspect each bearing for pitting and radial scratches.

If bearings are damaged, replace the bearings.

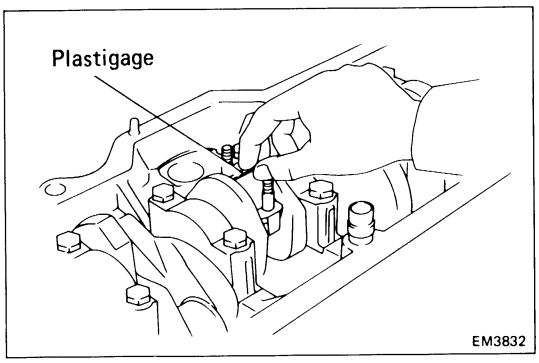

(f) Lay a strip of Plastigage across the crankshaft pin.

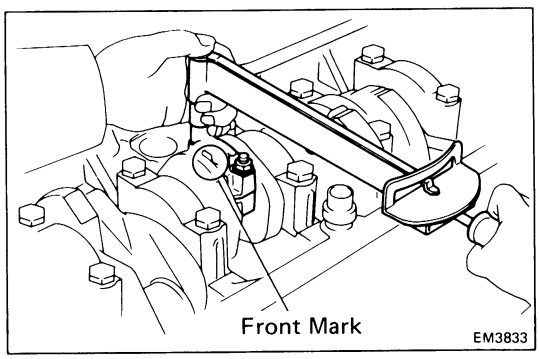

(g) Align the rod and cap marks and fit on the cap. Torque the rod cap nuts.

Torque: 650 kg-cm (47 ft-lb, 64 N·m)

HINT: Do not turn the crankshaft.

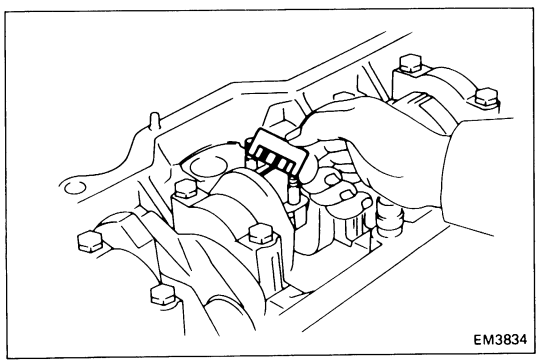

(h) Remove the rod cap.

(i) Measure the plastigage at its widest point.

Standard clearance: 0.021 — 0.053 mm (0.0008 — 0.0021 in.)

Maximum clearance: 0.07 mm (0.0028 in.)

If the clearance is greater than maximum, replace the bearings and/or grind the crank pins.

Undersized bearing: U/S 0.25

(j) Clean any Plastigage from the bearing and crankshaft pin.

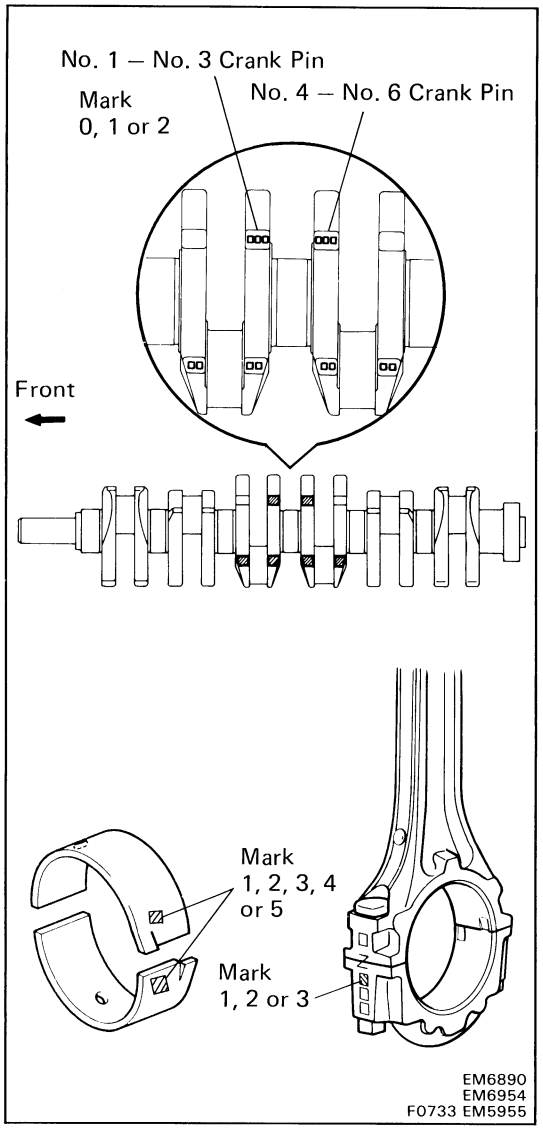

HINT: If using a standard size bearing, replace with one having the same number. If the number of the bearing cannot be determined, select a bearing from the table below according to the numbers imprinted on the connecting rod cap and crankshaft. There are five sizes of standard bearings, marked "1", "2", "3", "4" and "5" accordingly.

	Number marked								
Rod cap	1	1	2	1	2	3	2	3	3
Crankshaft	0	1	0	2	1	0	2	1	2
Bearing	1	2	2	3	3	3	4	4	5

Example: Rod cap "2", Crackshaft "1" = Bearing "3"

(Reference)

mm (in.)

Mark	Big End Inner Diameter	Crank Pin Diameter	Bearing Center Wall Thickness
0	–	51.993 – 52.000 (2.0470 – 2.0472)	–
1	55.015 – 55.025 (2.1659 – 2.1663)	51.985 – 51.992 (2.0446 – 2.0469)	1.490 – 1.495 (0.0587 – 0.0589)
2	55.026 – 55.035 (2.1664 – 2.1667)	51.976 – 51.984 (2.0463 – 2.0466)	1.496 – 1.500 (0.0589 – 0.0591)
3	55.036 – 55.045 (2.1668 – 2.1671)	–	1.501 – 1.505 (0.0591 – 0.0593)
4	–	–	1.506 – 1.510 (0.0593 – 0.0594)
5	–	–	1.511 – 1.515 (0.0595 – 0.0596)
U/S 0.25	55.015 – 55.045 (2.1659 – 2.1671)	51.725 – 51.735 (2.0364 – 2.0368)	1.622 – 1.632 (0.0639 – 0.0643)

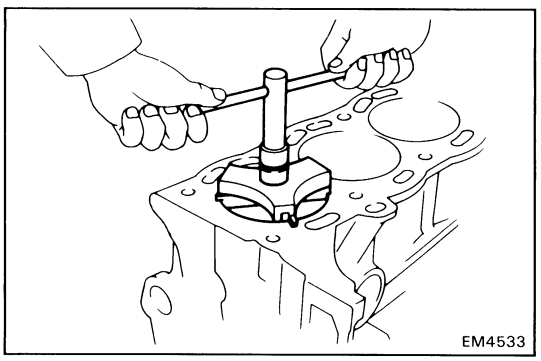

20. REMOVE PISTON AND CONNECTING ROD ASSEMBLIES

(a) Remove all the carbon from the top of the cylinder.

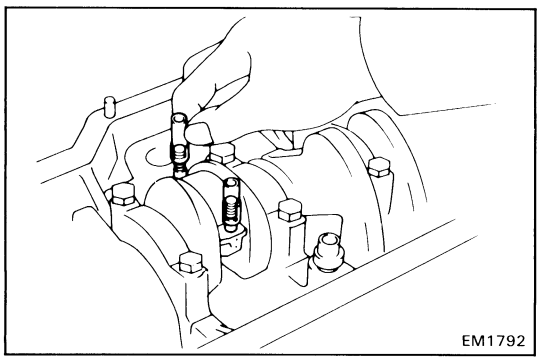

(b) Cover the rod bolts with a short piece of hose to protect the crank pin from damage.

(c) Push the piston and connecting rod assembly out through the top of the cylinder block.

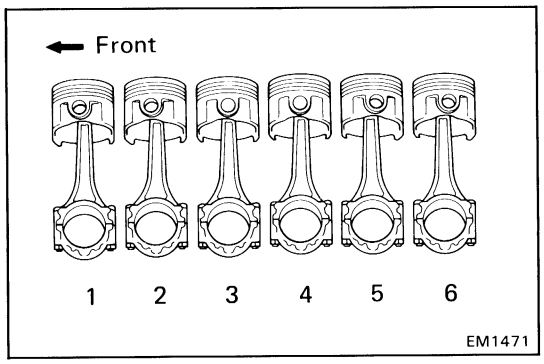

(d) Arrange the pistons and connecting rod caps in order.

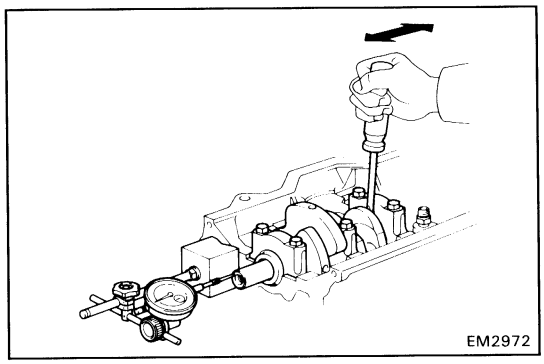

21. CHECK CRANKSHAFT THRUST CLEARANCE

Using a dial gauge, measure the crankshaft thrust clearance while prying the crankshaft back and forth with a screwdriver.

Standard clearance: 0.05 — 0.25 mm (0.0020 — 0.0098 in.)
Maximum clearance: 0.30mm (0.0118 in.)

If the clearance is greater than maximum, replace the thrust washers as a set and/or crankshaft.

HINT: Thrust washer thickness:

STD 2.925 — 2.975 mm (0.1152 — 0.1171 in.)
O/S 0.125 2.988 — 3.038 mm (0.1176 — 0.1196 in.)

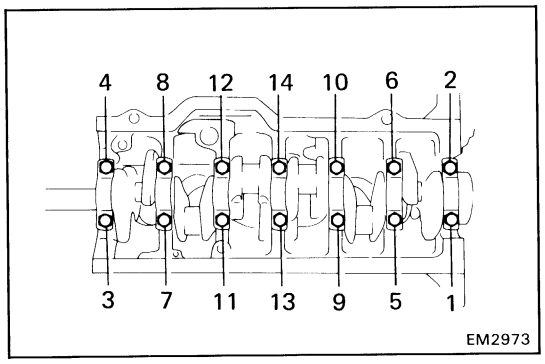

22. REMOVE MAIN BEARING CAPS AND CHECK OIL CLEARANCE

(a) Uniformly loosen and remove the main bearing cap bolts in several passes, in the sequence shown.

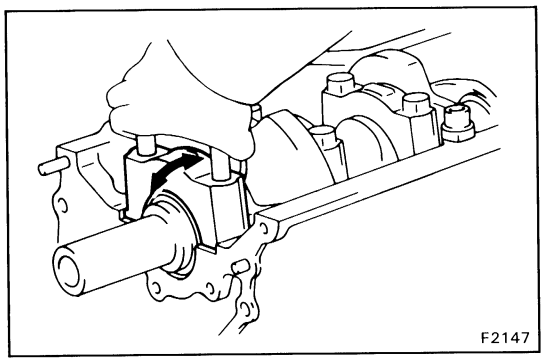

(b) Using the removed bearing cap bolts, wiggle the bearing cap back and forth, and remove it with the lower bearing and thrust washers (No.4 journal only).

HINT:
- Keep the lower bearing inserted with the cap.
- Arrange the caps and lower thrust washers in correct order.

(c) Lift off the crankshaft.

HINT: Keep the upper bearings and upper thrust washers (for the No.4 journal only) inserted in the cylinder block.

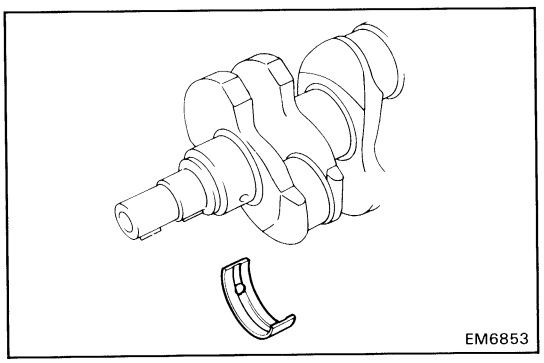

(d) Clean the journals and bearings.

(e) Check the journals and bearings for pitting and scratches.

If the journal or a bearing is damaged, grind or replace the crankshaft and replace the bearings.

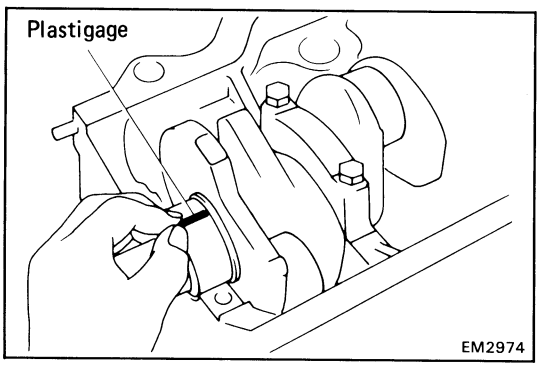

(f) Install the upper main bearing on the cylinder block and crankshaft.

(g) Lay a strip of Plastigage across the main journals.

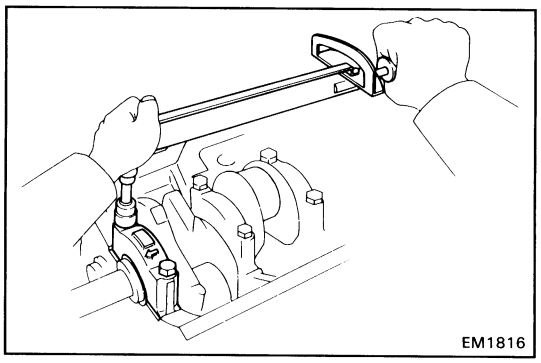

(h) Install the main bearing caps. Torque the cap bolts.

Torque: 1,040 kg-cm (75 ft-lb, 102 N·m)

HINT: Do not turn crankshaft.

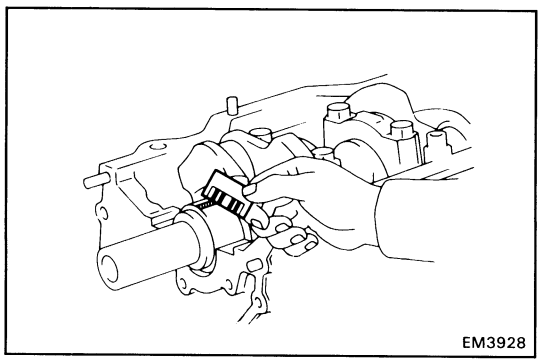

(i) Remove the main bearing caps.

(j) Measure the Plastigage at its widest point.

Standard clearance: 0.030 — 0.048 mm (0.0012 — 0.0019 in.)

Maximum clearance: 0.07 mm (0.0028 in.)

If the oil clearance is greater than maximum, replace the bearings. If necessary, replace the crankshaft.

Undersized bearing: U/S 0.25

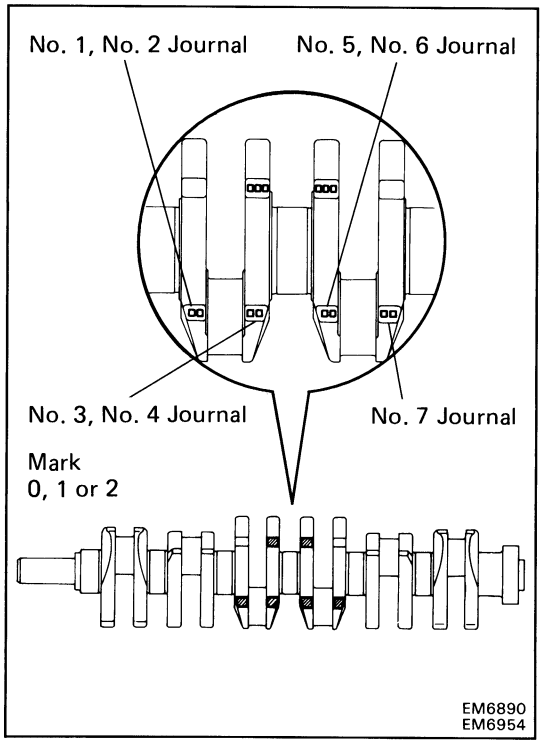

HINT: If using a standard size bearing, replace with one having the same number. If the number of the bearing cannot be determined, select a bearing from the table below according to the numbers imprinted on the cylinder block and crankshaft. There are five sizes of standard bearings, marked "1", "2", "3", "4" and "5" accordingly.

	Number marked								
Cylinder Block	1	1	2	1	2	3	2	3	3
Crankshaft	0	1	0	2	1	0	2	1	2
Bearing	1	2	2	3	3	3	4	4	5

Example: Cylinder Block "2", Crankshaft "1" = Bearing "3"

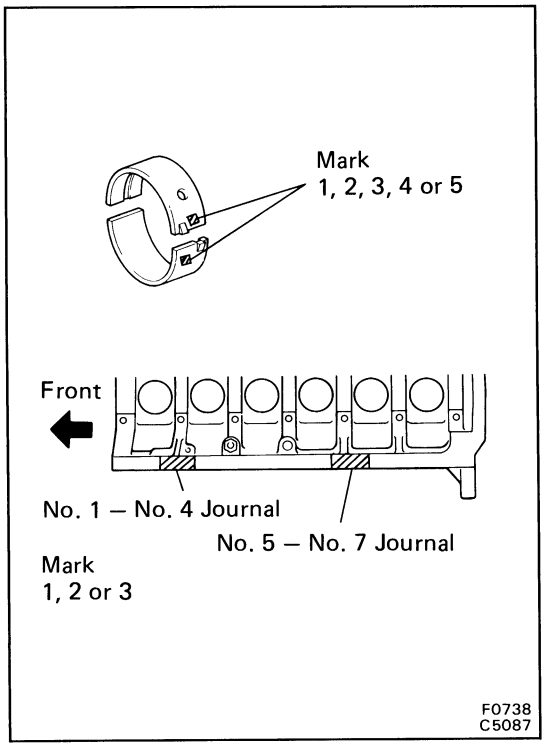

(Reference)

mm (in.)

Mark	Cylinder Block Main Journal Bore	Main Journal Diameter	Bearing Center Wall Thickness
0	–	60.007 – 60.012 (2.3625 – 2.3627)	–
1	64.024 – 64.030 (2.5206 – 2.5209)	60.001 – 60.006 (2.3622 – 2.3624)	1.988 – 1.991 (0.0783 – 0.0784)
2	64.031 – 64.036 (2.5209 – 2.5211)	59.994 – 60.000 (2.3620 – 2.3622)	1.992 – 1.994 (0.0784 – 0.0785)
3	64.037 – 64.042 (2.5211 – 2.5213)	–	1.995 – 1.997 (0.0785 – 0.0786)
4	–	–	1.998 – 2.000 (0.0787 – 0.0787)
5	–	–	2.001 – 2.003 (0.0788 – 0.0789)
U/S 0.25	64.022 – 64.046 (2.5205 – 2.5215)	59.730 – 59.740 (2.3516 – 2.3520)	2.123 – 2.133 (0.0086 – 0.0840)

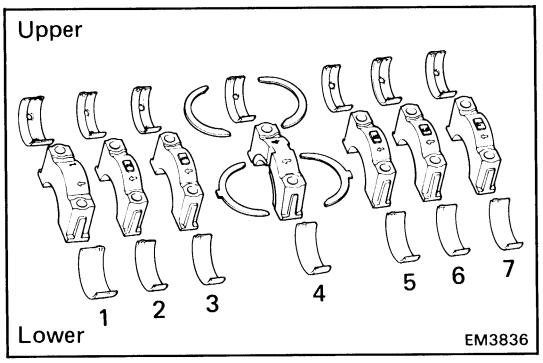

23. REMOVE CRANKSHAFT

(a) Lift out the crankshaft.

(b) Remove the upper main bearings and upper thrust washers from the cylinder block.

(c) Clean out the scraps of Plastigage from bearing and journals.

HINT:

- Arrange the caps, bearings and thrust washers in correct order.
- The pilot bearing in the crankshaft rear end is permanently lubricated and requires no cleaning or lubrication.

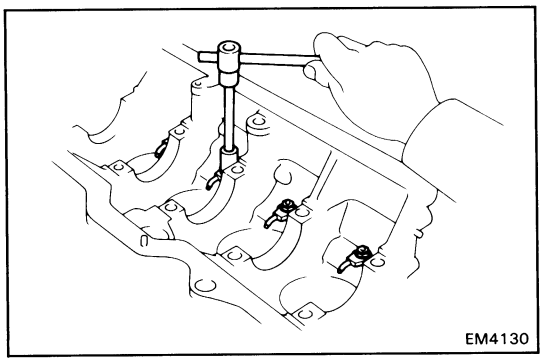

24. (7M-GTE) REMOVE OIL NOZZLES

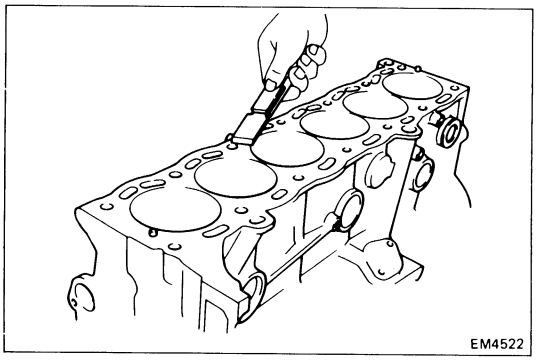

INSPECTION OF CYLINDER BLOCK

1. REMOVE GASKET MATERIAL

Using a gasket scraper, remove all the gasket material from the cylinder block surface.

2. CLEAN CYLINDER BLOCK

Using a soft brush and solvent, clean the block.

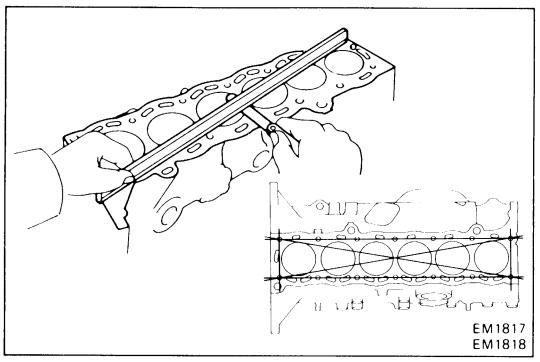

3. INSPECT TOP OF CYLINDER BLOCK FOR FLATNESS

Using a precision straight edge and thickness gauge, measure the surfaces contacting the cylinder head gasket for warpage.

Maximum warpage: 0.05 mm (0.0020 in.)

If warpage is greater than maximum, replace the cylinder block.

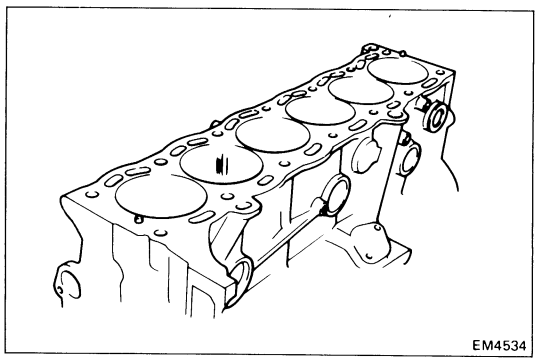

4. INSPECT CYLINDERS FOR VERTICAL SCRATCHES

Visually check the cylinder for vertical scratches.

If deep scratches are present, rebore all six cylinders. If necessary, replace the cylinder block.

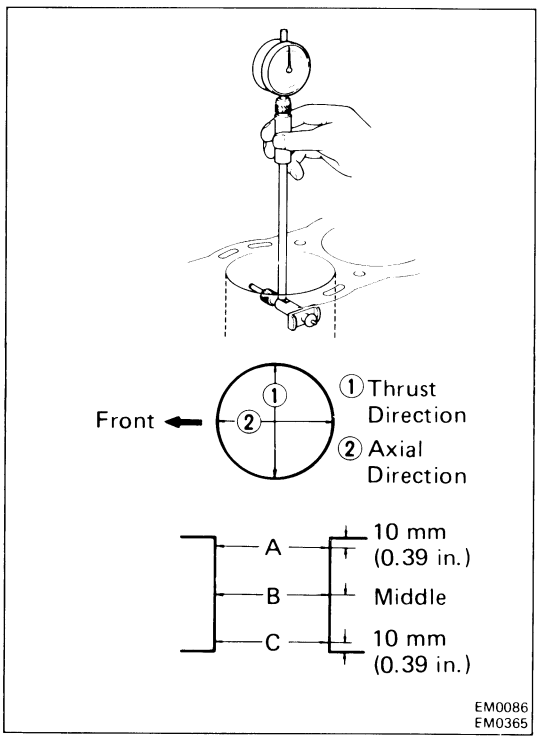

5. INSPECT CYLINDER BORE DIAMETER

Using a cylinder gauge, measure the cylinder bore diameter at positions A, B and C in the thrust and axial directions.

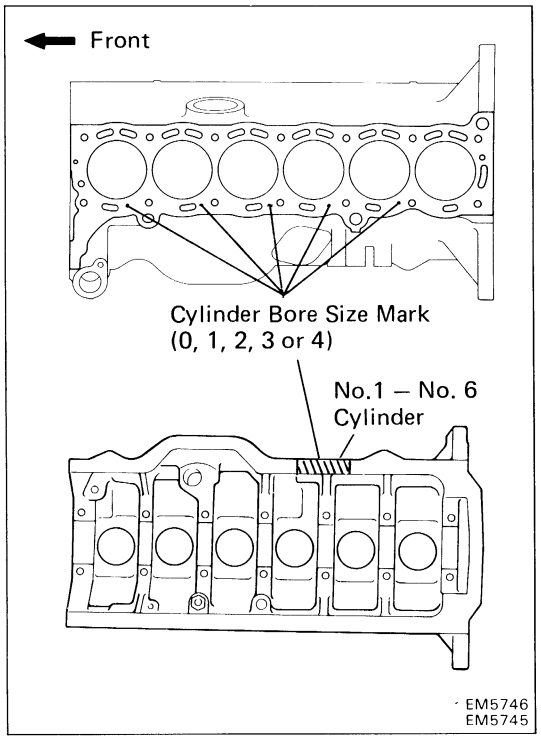

HINT: There are five sizes of standard cylinder bore diameter, marked "0", "1", "2", "3" and "4" accordingly. The mark is stamped on the cylinder block as shown in the illustration.

Standard cylinder bore diameter:

STD size

Mark "0"	**82.990 – 83.000 mm (3.2673 – 3.2677 in.)**
Mark "1"	**83.001 – 83.010 mm (3.2677 – 3.2681 in.)**
Mark "2"	**83.011 – 83.020 mm (3.2681 – 3.2685 in.)**
Mark "3"	**83.021 – 83.030 mm (3.2685 – 3.2689 in.)**
Mark "4"	**83.031 – 83.040 mm (3.2689 – 3.2693 in.)**

Maximum cylinder bore diameter:

STD size 83.24 mm (3.2772 in.)
O/S 0.50 83.74 mm (3.2968 in.)

If the diameter is greater than maximum, rebore all six cylinders. If necessary, replace the cylinder block.

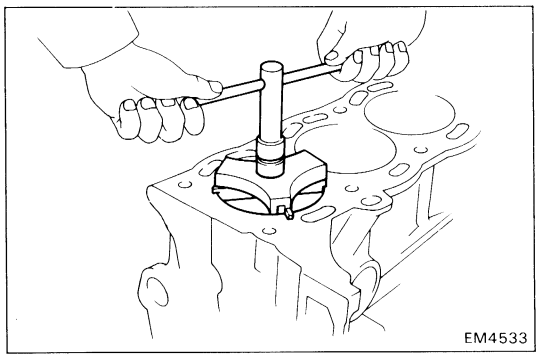

6. REMOVE CYLINDER RIDGES

If the wear is less than 0.2 mm (0.008 in.), use a ridge reamer to machine the top of the cylinder.

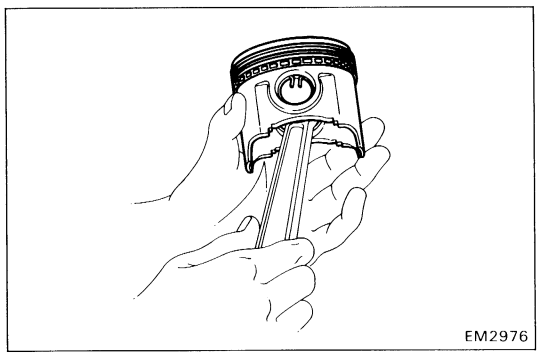

DISASSEMBLY OF PISTON AND CONNECTING ROD ASSEMBLIES

(See page EM-63)

1. CHECK FIT BETWEEN PISTON AND PIN

Try to move the piston back and forth on the piston pin.

If any movement is felt, replace the piston and pin as a set.

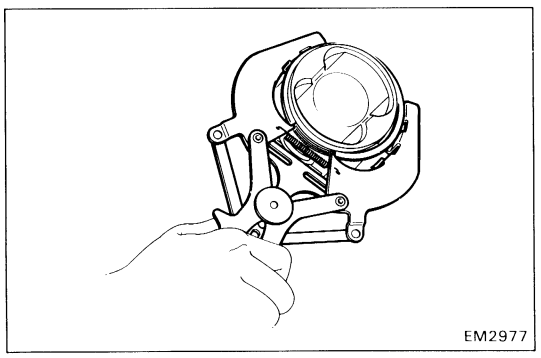

2. REMOVE PISTON RINGS

(a) Using a piston ring expander, remove the compression rings.

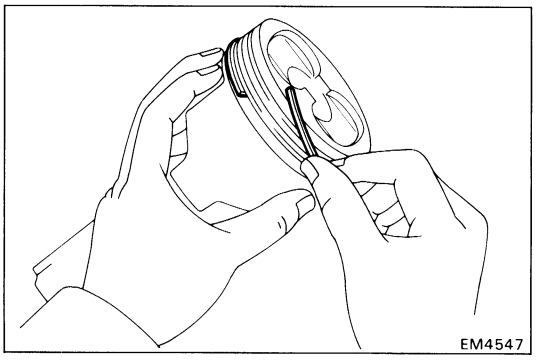

(b) Remove the two side rails and oil ring expander by hand.

HINT: Arrange the rings in correct order.

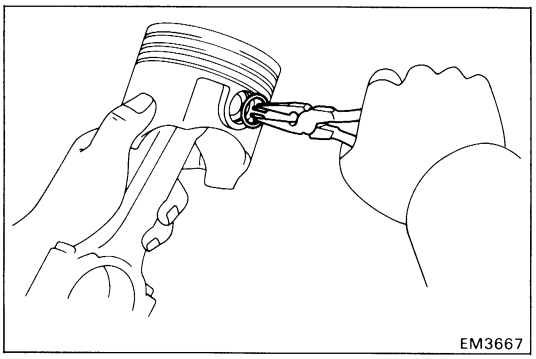

3. DISCONNECT CONNECTING ROD FROM PISTON

(a) Using needle-nose pliers, remove the snap rings from the piston.

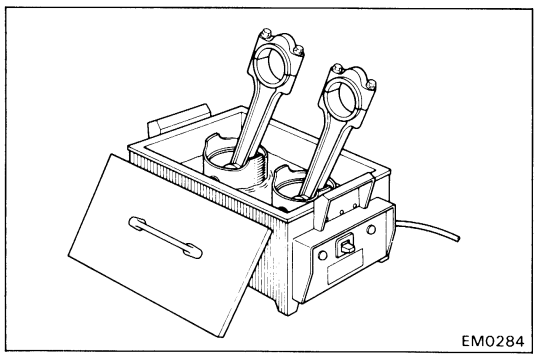

(b) Gradually heat the piston to approx. 60°C (140°F).

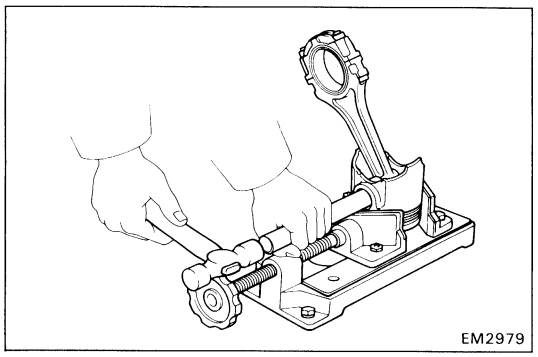

(c) Using a plastic-faced hammer and brass bar, lightly tap out the piston pin and remove the connecting rod.

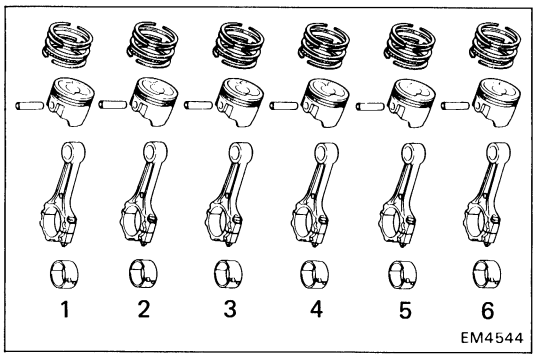

HINT:
- The piston and pin are a matched set.
- Arrange the pistons, pins, rings, connecting rods and bearings in correct order.

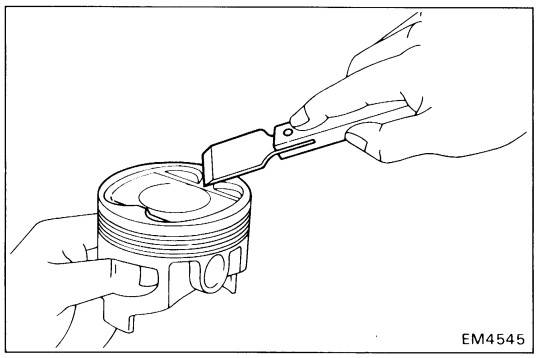

INSPECTION OF PISTON AND CONNECTING ROD ASSEMBLIES

1. CLEAN PISTON

(a) Using a gasket scraper, remove the carbon from the piston top.

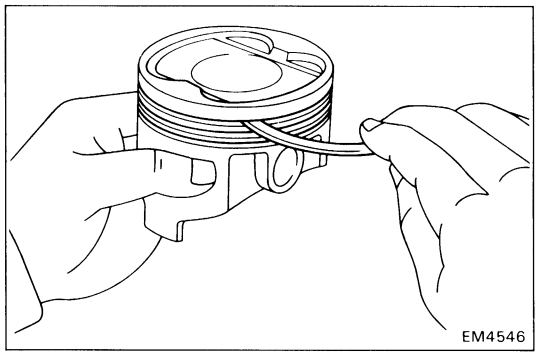

(b) Using a groove cleaning tool or broken ring, clean the ring grooves.

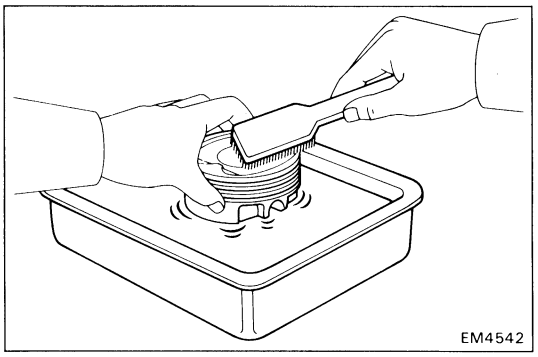

(c) Using a soft brush and solvent, thoroughly clean the piston.

NOTICE: Do not damage the piston.

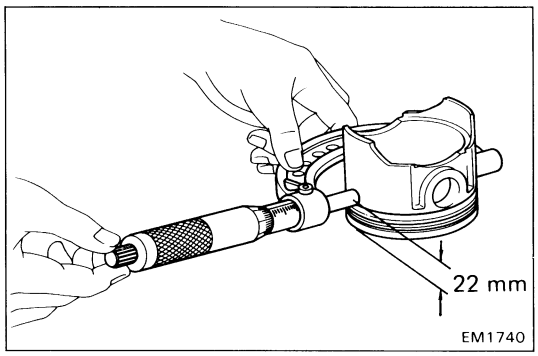

2. INSPECT PISTON DIAMETER AND OIL CLEARANCE

(a) Using a micrometer, measure the piston diameter at a right angle to the piston pin hole center line, 22 mm (0.87 in.) from the piston head.

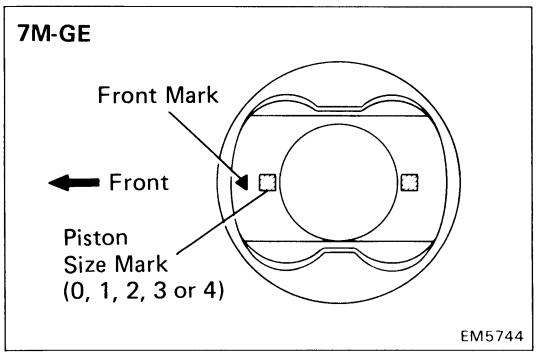

HINT: There are five sizes of standard piston diameter, marked "0", "1", "2", "3" and "4" accordingly. The mark is stamped on the piston as shown in the illustration.

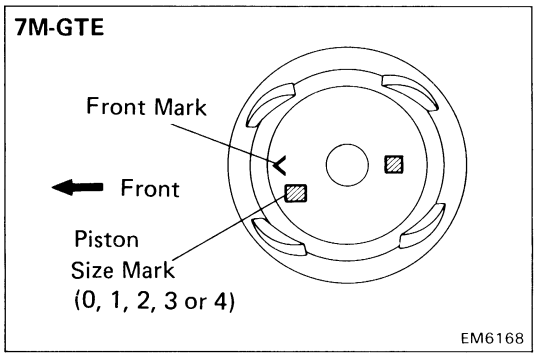

Piston diameter:

STD size

7M-GE	**Mark "0"**	**82.900 – 82.910 mm (3.2638 – 3.2642 in.)**
	Mark "1"	**82.911 – 82.920 mm (3.2642 – 3.2646 in.)**
	Mark "2"	**82.921 – 82.930 mm (3.2646 – 3.2650 in.)**
	Mark "3"	**82.931 – 82.940 mm (3.2650 – 3.2653 in.)**
	Mark "4"	**82.941 – 82.950 mm (3.2654 – 3.2657 in.)**
7M-GTE	**Mark "0"**	**82.910 – 82.920 mm (3.2642 – 3.2646 in.)**
	Mark "1"	**82.921 – 82.930 mm (3.2646 – 3.2650 in.)**
	Mark "2"	**82.931 – 82.940 mm (3.2650 – 3.2653 in.)**
	Mark "3"	**82.941 – 82.950 mm (3.2654 – 3.2657 in.)**
	Mark "4"	**82.951 – 82.960 mm (3.2658 – 3.2661 in.)**

O/S 0.50

7M-GE	**83.40 – 83.45 mm (3.2835 – 3.2854 in.)**
7M-GTE	**83.41 – 83.46 mm (3.2839 – 3.2858 in.)**

(b) Measure the cylinder bore diameter in thrust directions. (See page EM-74)

(c) Subtract the piston diameter measurement from the cylinder bore diameter measurement.

Standard oil clearance:

7M-GE	**0.08 – 0.10 mm (0.0031 – 0.0039 in.)**
7M-GTE	**0.07 – 0.09 mm (0.0028 – 0.0035 in.)**

Maximum oil clearance: 0.13 mm (0.0051 in.)

If the oil clearance is greater than maximum, replace the piston. If necessary, rebore all six cylinders and replace all six pistons. If necessary, replace the cylinder block.

HINT: (Use cylinder block sub-assembly)
When installing a standard piston, install one with the same mark as the standard bore diameter mark on the cylinder block.

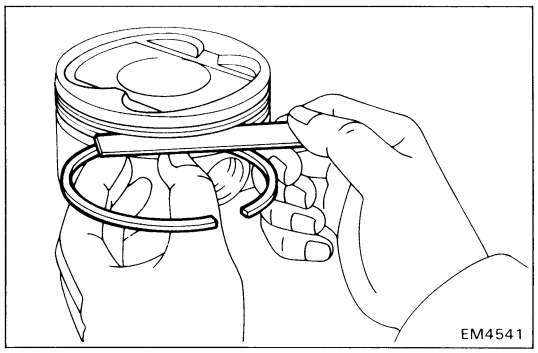

3. INSPECT CLEARANCE BETWEEN WALL OF RING GROOVE AND NEW PISTON RING

Using a thickness gauge, measure the clearance between new piston ring and the wall of the piston ring groove.

Ring groove clearance: 0.001 < x < .0015

No.1	**0.03 – 0.07 mm (0.0012 – 0.0028 in.)**
No.2	**0.02 – 0.06 mm (0.0008 – 0.0024 in.)**

If the clearance is not within specification, replace the piston.

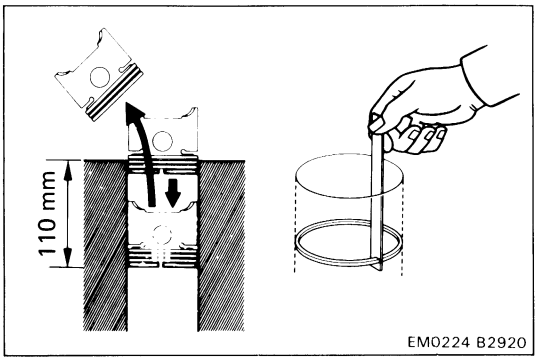

4. INSPECT PISTON RING END GAP

(a) Insert the piston ring into the cylinder.

(b) Using a piston, push the ring a little beyond the bottom of the ring travel.
(110 mm (4.33 in.) from the top surface of cylinder block)

(c) Using a thickness gauge, measure the end gap.

Ring end gap:

mm (in.)

	No.1		No.2		Oil	
	STD	Limit	STD	Limit	STD	Limit
7M-GE	0.23 – 0.38 (0.0091 – 0.0150)	0.68 (0.0268)	0.25 – 0.53 (0.0098 – 0.0209) .010"	1.13 (0.0445)	0.10 – 0.40 (0.0039 – 0.0157)	1.00 (0.0394)
7M-GTE	0.29 – 0.44 (0.0114 – 0.0173)	0.74 (0.0291)			0.10 – 0.44 (0.0039 – 0.0173)	1.04 (0.0409)

(.017") .017"

If the diameter is geater than maximum, rebore all six cylinders, or replace the cylinder block.

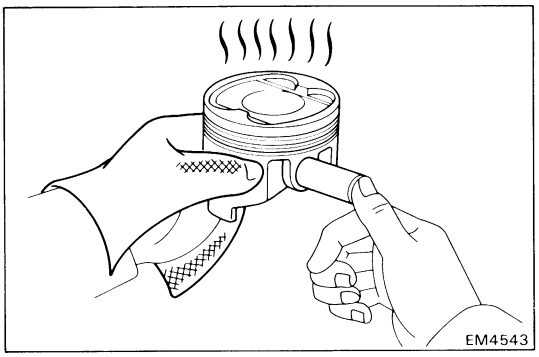

5. CHECK PISTON PIN FIT

At 60°C (140°F) you should be able to push the pin into the piston with your thumb.

If the pin can be installed at a lower temperature, replace the piston.

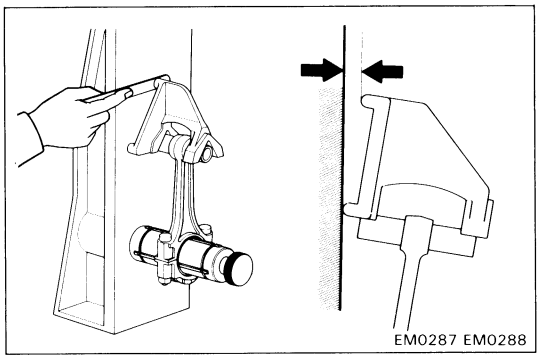

6. INSPECT CONNECTING ROD

(a) Using a rod aligner and thickness gauge, check the connecting rod alignment.

- Check for bend.

Maximum bend:
0.05 mm (0.0020 in.) per 100 mm (3.94 in.)

If bend is greater than maximum, replace the connecting rod assembly.

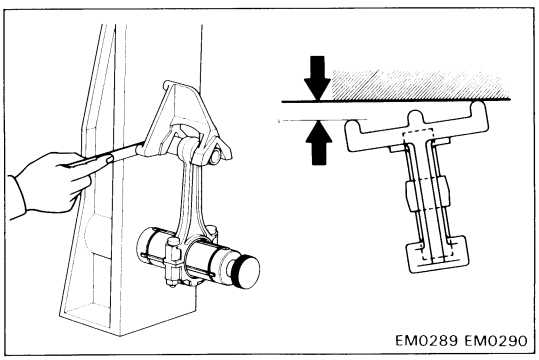

- Check for twist.

Maximum twist:
0.15 mm (0.0059 in.) per 100 mm (3.94 in.)

If twist is greater than maximum, replace the connecting rod assembly.

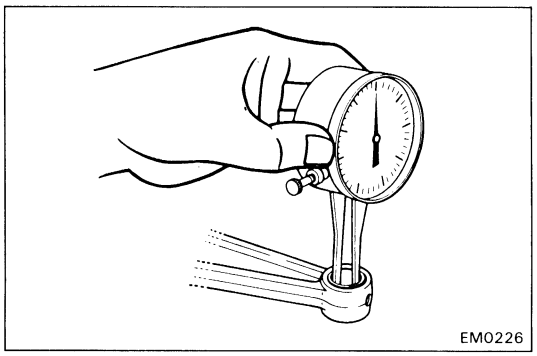

(b) Inspect the oil clearance between the rod bushing and piston pin.

- Using a caliper gauge, measure the inside diameter of the connecting rod bushing.

Bushing inside diameter: 22.005 — 22.017 mm (0.8663 — 0.8668 in.)

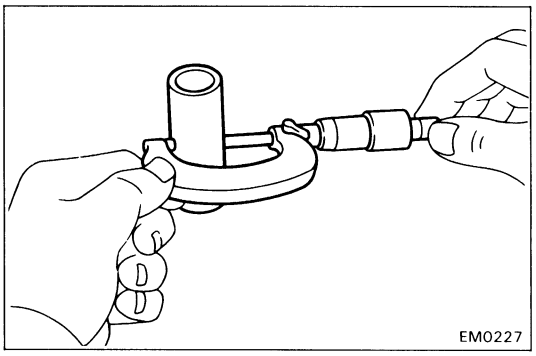

- Using a micrometer, measure the piston pin diameter.

Piston pin diameter: 21.996 — 22.009 mm (0.8660 — 0.8665 in.)

- Subtract the piston pin diameter measurement from the bushing inside diameter measurement.

Standard oil clearance: 0.005 — 0.011 mm (0.0002 — 0.0004 in.)
Maximum oil clearance: 0.02 mm (0.0008 in.)

If the oil clearance is greater than maximum, replace the bushing. If necessary, replace the piston and piston pin assembly.

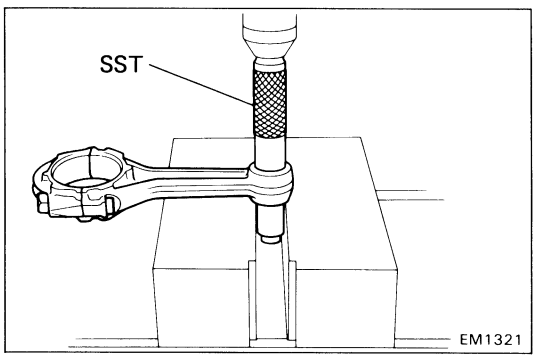

7. IF NECESSARY, REPLACE CONNECTING ROD BUSHING

(a) Using SST and a press, press out the bushing.

SST 09222-30010

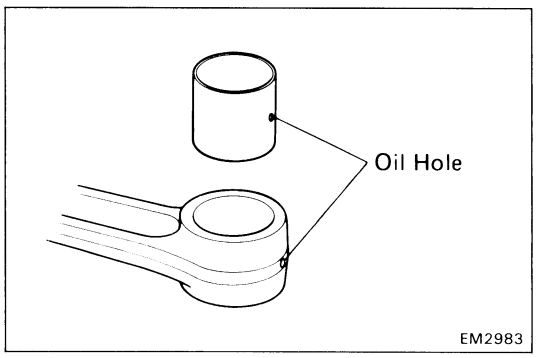

(b) Align the oil holes of a new bushing and connecting rod.

(c) Using SST and a press, press in the bushing.

SST 09222-30010

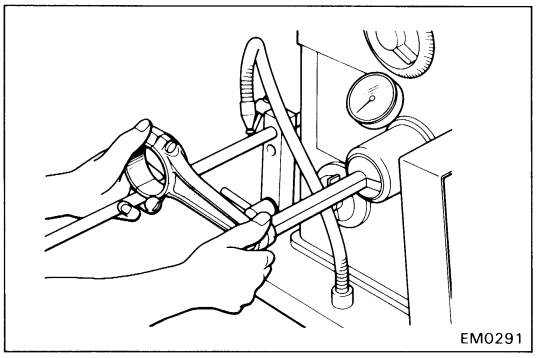

(d) Using a pin hole grinder, hone the bushing to obtain the specified clearance between the bushing and piston pin.

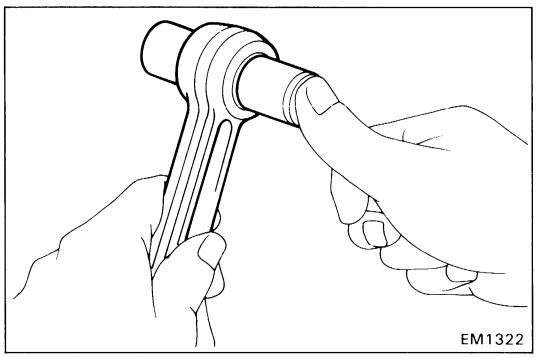

(e) Check the piston pin fit at normal room temperature. Coat the piston pin with engine oil and push it into the connecting rod with your thumb.

BORING OF CYLINDERS

HINT:
- Bore all six cylinders for the oversized piston outside diameter.
- Replace the piston rings with ones to match the oversized pistons.

1. SELECT OVERSIZED PISTON

Oversized piston diameter:

O/S 0.50	**7M-GE**	**83.40 — 83.45 mm (3.2835 — 3.2854 in.)**
	7M-GTE	**83.41 — 83.46 mm (3.2839 — 3.2858 in.)**

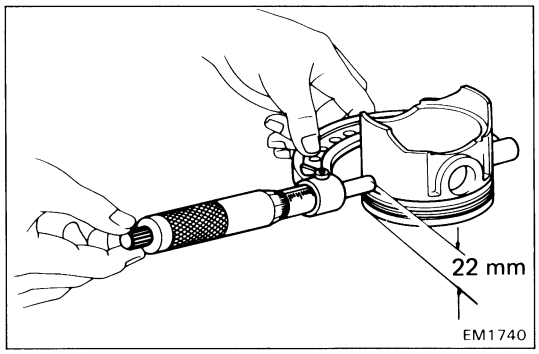

2. CALCULATE AMOUNT TO BORE CYLINDER

(a) Using a micrometer, measure the piston diameter at a right angle to the piston pin hole center line, 22 mm (0.87 in.) from the piston head.

(b) Calculate the amount each cylinder is to be rebored as follows:

Size to be rebored = P + C — H
P = Piston diameter
C = Piston clearance

7M-GE	**0.08 — 0.10 mm (0.0020 — 0.0028 in.)**
7M-GTE	**0.07 — 0.09 mm (0.0028 — 0.0035 in.)**

H = Allowance for honing

0.02 mm (0.0008 in.) or less

3. BORE AND HONE CYLINDERS TO CALCULATED DIMENSIONS

Maximum honing: 0.02 mm (0.0008 in.)

NOTICE: Excess honing will destroy the finished roundness.

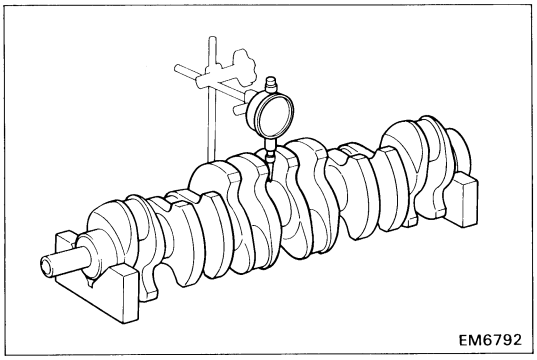

INSPECTION AND REPAIR OF CRANKSHAFT

1. INSPECT CRANKSHAFT FOR RUNOUT

(a) Place the crankshaft on V-blocks.

(b) Using a dial indicator, measure the circle runout at the center journal.

Maximum circle runout: 0.06 mm (0.0024 in.)

If the circle runout is greater than maximum, replace the crankshaft.

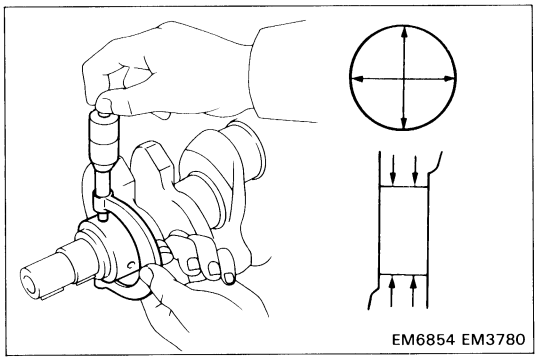

2. INSPECT MAIN JOURNALS AND CRANK PINS

(a) Using a micrometer, measure the diameter of each main journal and crank pin.

Journal diameter:

STD size	**59.994 – 60.012 mm (2.3620 – 2.3627 in.)**
U/S 0.25	**59.730 – 59.740 mm (2.3516 – 2.3520 in.)**

Crank pin diameter:

STD size	**51.976 – 52.000 mm (2.0463 – 2.0472 in.)**
U/S 0.25	**51.725 – 51.735 mm (2.0364 – 2.0368 in.)**

If the diameter is not within specification, check the oil clearance. If necessary, grind or replace the crankshaft.

(b) Check each main journal and crank pin for taper and out-of-round as shown.

Maximum taper and out-of-round: 0.02 mm (0.0008 in.)

If taper or out-of-round is greater than maximum, grind or replace the crankshaft.

3. IF NECESSARY, GRIND AND HONE MAIN JOURNALS AND/OR CRANK PINS

Grind and hone the main journals and/or crank pins to the finished undersized diameter (See procedure step 2).

Install new main journal and/or crank pin undersized bearings.

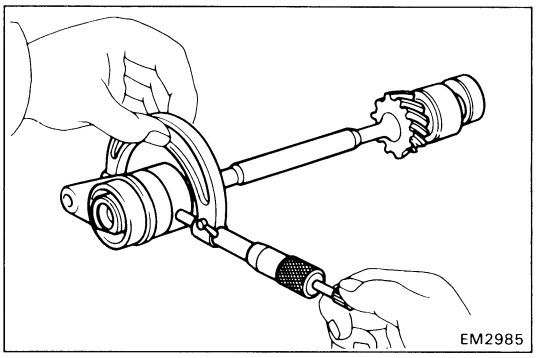

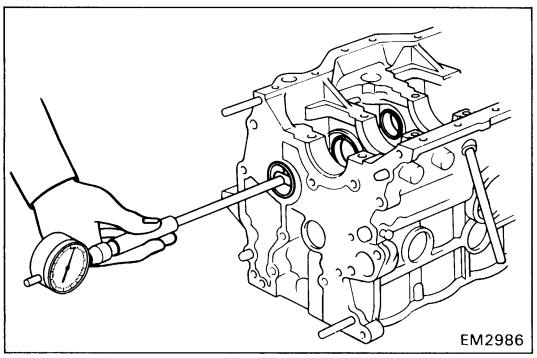

INSPECTION AND REPAIR OF OIL PUMP DRIVE SHAFT, BEARINGS AND BUSHING

1. INSPECT OIL PUMP DRIVE SHAFT

(a) Using a micrometer, measure the journal diameter of pump drive shaft.

Standard journal diameter:

Front	**40.959 — 40.975 mm (1.6126 — 1.6132 in.)**
Rear	**32.959 — 32.975 mm (1.2976 — 1.2982 in.)**

(b) Using a cylinder gauge, measure the inside diameter of the pump drive shaft bearing.

Bearing inside diameter:

Front	**41.000 — 41.025 mm (1.6142 — 1.6152 in.)**
Rear	**33.000 — 33.025 mm (1.2992 — 1.3002 in.)**

(c) Subtract the journal diameter measurement from the bearing inside diameter measurement.

Standard oil clearance:	**0.025 — 0.066 mm (0.0010 — 0.0026 in.)**
Maximum oil clearance:	**0.08 mm (0.0031 in.)**

If the clearance is greater than maximum, replace the bearing. If necessary, replace the drive shaft.

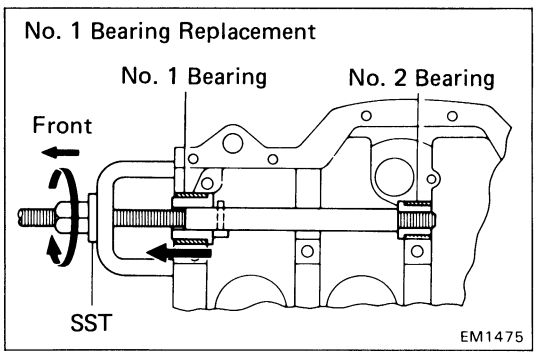

2. IF NECESSARY, REPLACE OIL PUMP DRIVE SHAFT BEARINGS

(a) Using SST, replace the No.1 bearing by using No.2 bearing as a guide.

SST 09215-00100 (09215-00120, 09215-00130, 09215-00140, 09215-00160, 09215-00210, 09215-00220)

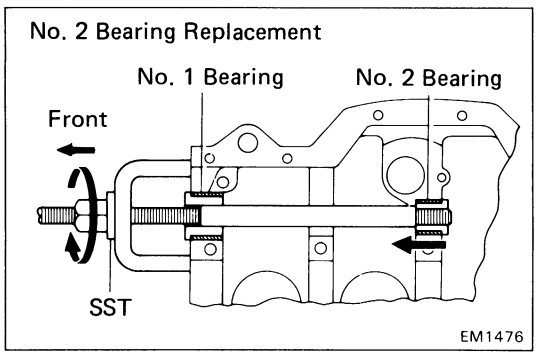

(b) Using SST, replace the No.2 bearing by using the No.1 bearing as a guide.

SST 09215-00100 (09215-00120, 09215-00130, 09215-00140, 09215-00210, 09215-00220)

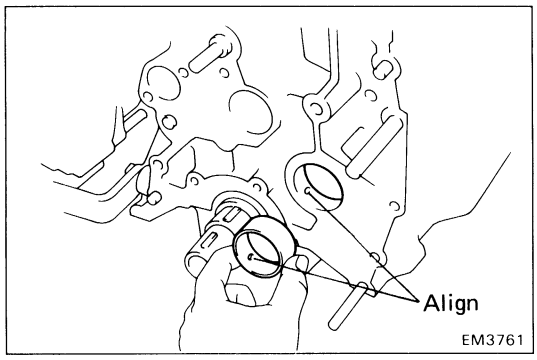

NOTICE: When inserting the bearings, align each oil hole.

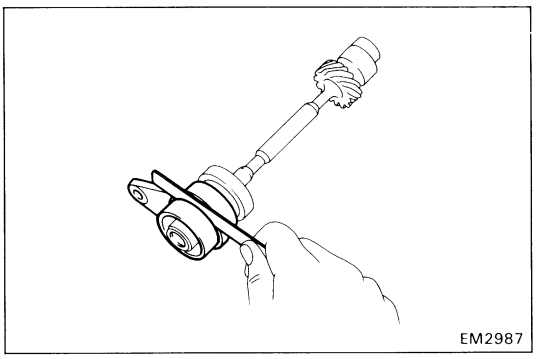

3. INSPECT OIL PUMP DRIVE SHAFT THRUST CLEARANCE

Using a thickness gauge, measure the drive shaft thrust clearance between the thrust plate and collar.

Standard thrust clearance: 0.06 — 0.13 mm (0.0024 — 0.0051 in.)

Maximum thrust clearance: 0.30 mm (0.0118 in.)

If clearance is greater than maximum, replace the thrust plate and/or collar.

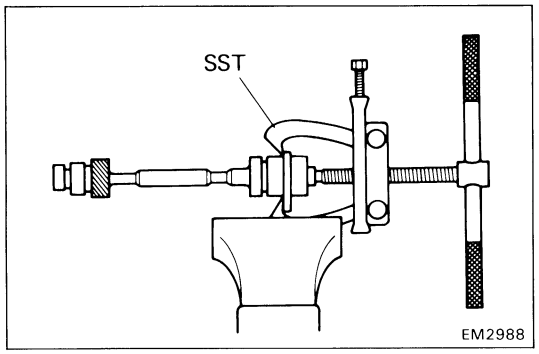

4. IF NECESSARY, REPLACE THRUST PLATE AND COLLAR

(a) Using SST, remove the thrust plate and collar.

SST 09950-20017

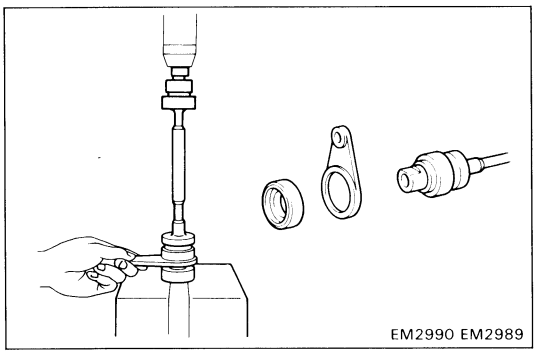

(b) Install the thrust plate and collar in the direction as shown.

(c) Using a press, install the thrust plate and collar.

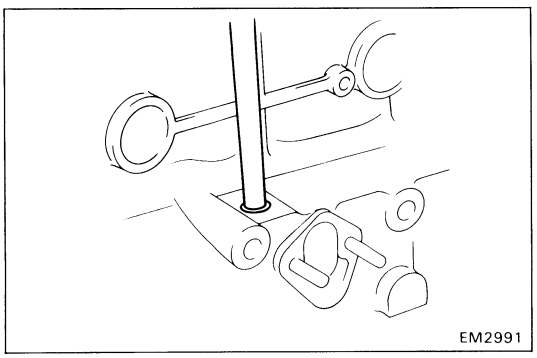

5. IF NECESSARY, REPLACE OIL PUMP GUIDE BUSHING

(a) Drive out the bushing from the outer side of the block.

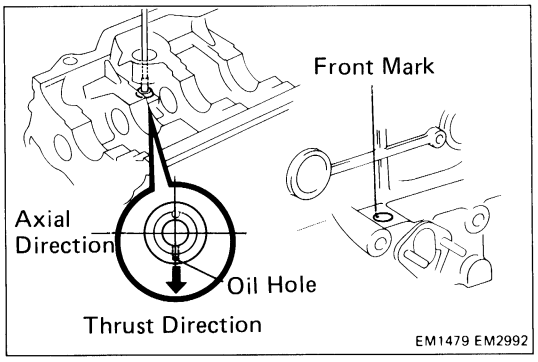

(b) Drive in the bushing from the inside of the block with a suitable tool.

HINT: The oil hole should be positioned toward the crankshaft side.

(c) Make sure the front mark of bushing should be positioned toward the front of block.

REPLACEMENT OF OIL SEALS

NOTE: There are two methods (A and B) of oil seal replacement.

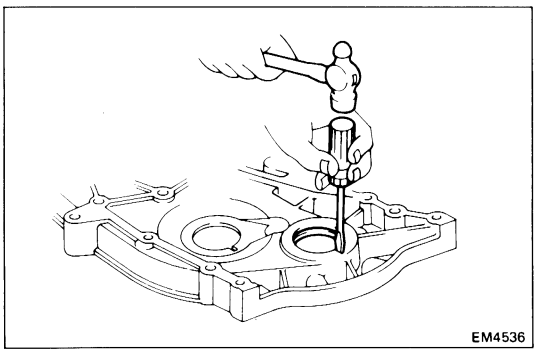

1. REPLACE CRANKSHAFT FRONT OIL SEAL

A. If the timing case is removed from the cylinder block:

(a) Using a screwdriver and hammer, tap out the oil seal.

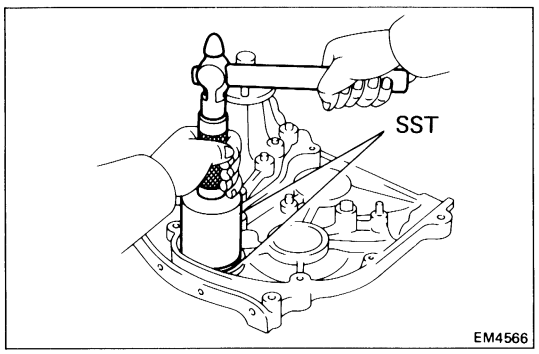

(b) Using SST and a hammer, tap in a new oil seal.

SST 09214-60010 and 09506-35010

(c) Apply MP grease to the oil seal lip.

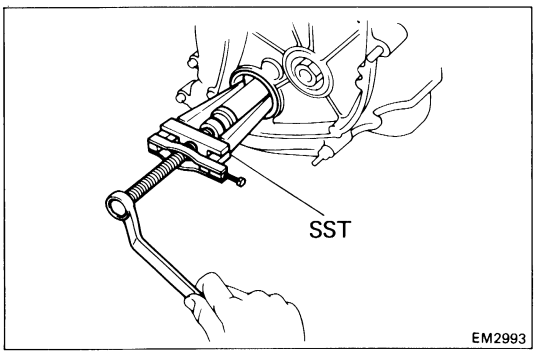

B. If the timing case is installed to the cylinder block:

(a) Using SST, remove the oil seal.

SST 09308-55010

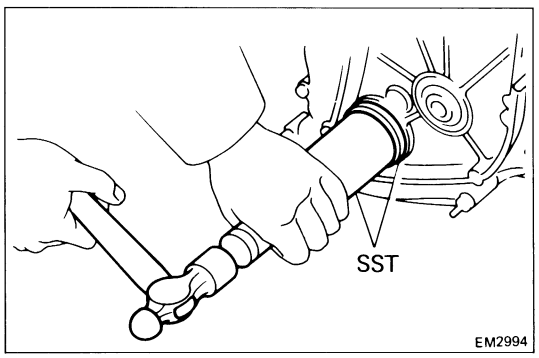

(b) Apply MP grease to a new oil seal lip.

(c) Using SST and a hammer, tap in the oil seal.

SST 09214-60010 and 09506-35010

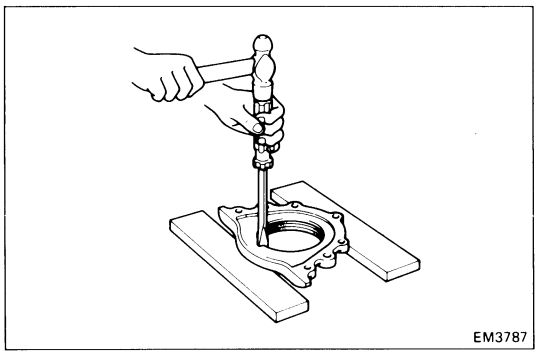

2. REPLACE CRANKSHAFT REAR OIL SEAL

A. If the rear oil seal retainer is removed from the cylinder block:

(a) Using a screwdriver and hammer, tap out the oil seal.

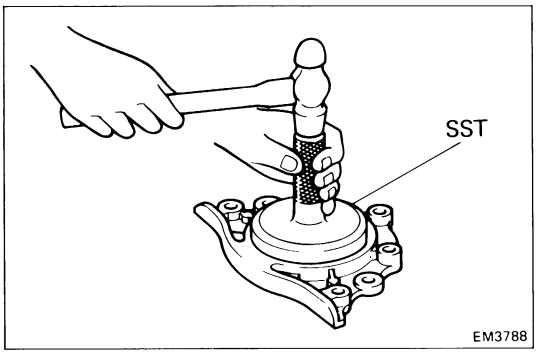

(b) Using SST and a hammer, tap in a new oil seal.

SST 09223-41020

(c) Apply MP grease to the oil seal lip.

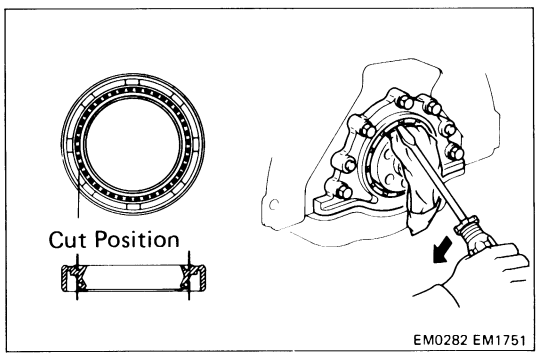

B. If the rear oil seal retainer is installed to the cylinder block:

(a) Using a knife, cut off the lip of the oil seal as shown.

(b) Using a screwdriver, pry out the oil seal.

NOTICE: Be careful not to damage the crankshaft. Tape the screwdriver tip.

(c) Check the oil seal lip contact surface of the crankshaft for cracks or damage.

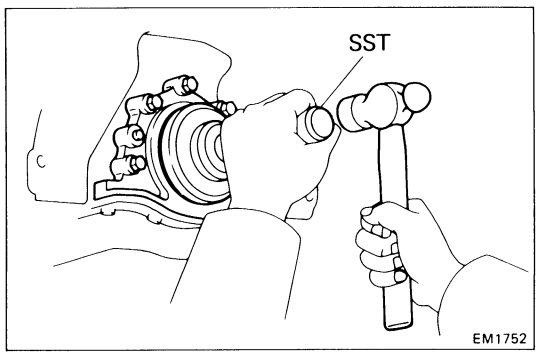

(d) Apply MP grease to a new oil seal lip.

(e) Using SST and a hammer, tap in the oil seal.

SST 09223-41020

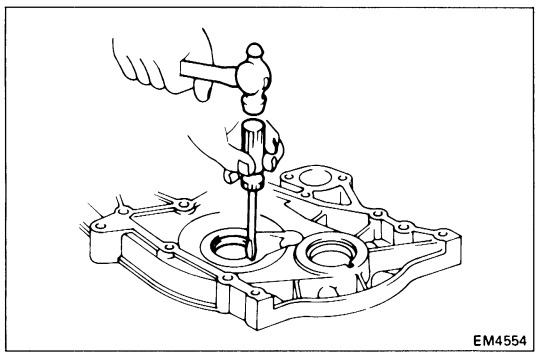

3. REPLACE OIL PUMP DRIVE SHAFT OIL SEAL

A. If the timing belt case is removed from the cylinder block:

(a) Using a screwdriver and hammer, tap out the oil seal.

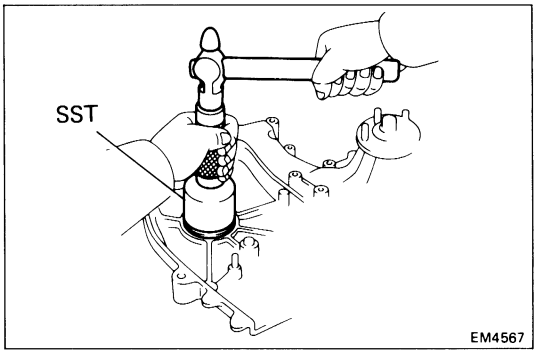

(b) Using SST and a hammer, tap in a new oil seal.

SST 09214-41010

(c) Apply MP grease to the oil seal lip.

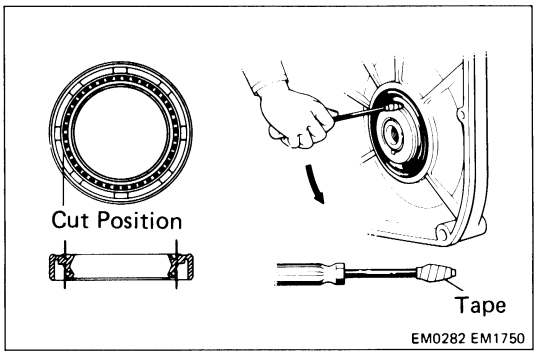

B. If the timing belt case is installed to the cylinder block:

(a) Using a knife, cut off the lip of the oil seal as shown.

(b) Using a screwdriver, pry out the oil seal.

NOTICE: Be careful not to damage the crankshaft. Tape the screwdriver tip.

(c) Check the oil seal lip contact surface of the pump drive shaft for cracks or damage.

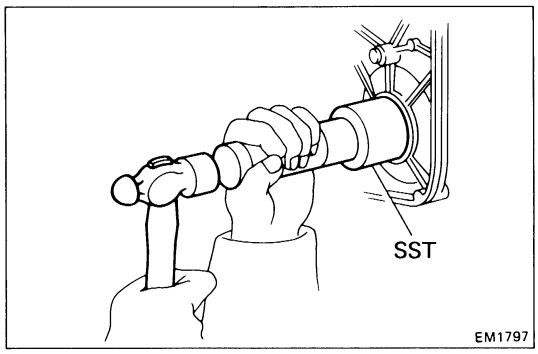

(d) Apply MP grease to a new oil seal lip.

(e) Using SST and a hammer, tap in the oil seal.

SST 09214-41010

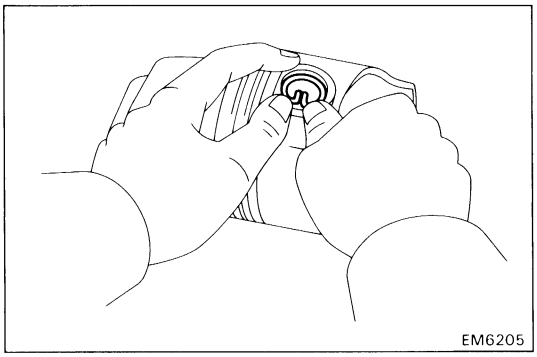

ASSEMBLY OF PISTON AND CONNECTING ROD

(See page EM-63)

1. ASSEMBLE PISTON AND CONNECTING ROD

(a) Install a new snap ring on one side of the piston pin hole.

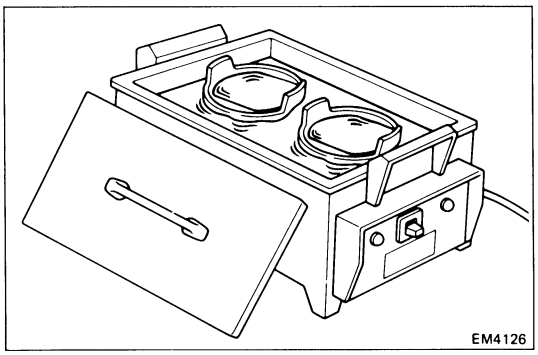

(b) Gradually heat the piston to approx. 60°C (140°F).

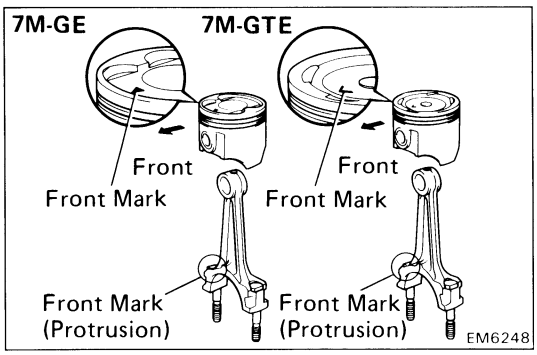

(c) Coat the piston pin with engine oil.

(d) Align the front marks of the piston and the connecting rod, and push in the piston pin with your thumb.

(e) Install a new snap ring on the other side of the pin hole.

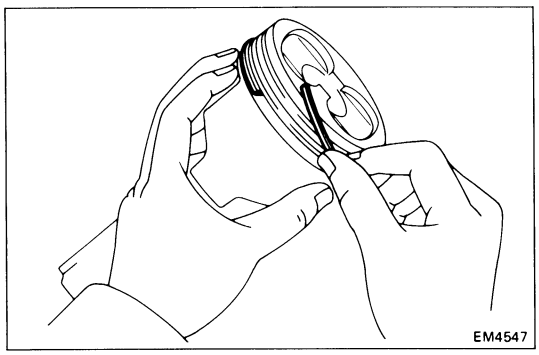

2. INSTALL PISTON RINGS

(a) Install the oil ring expander and two side rails by hand.

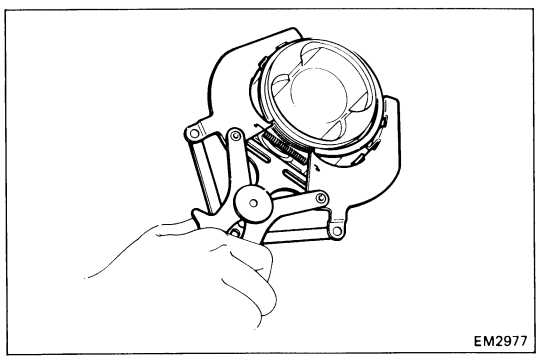

(b) Using a piston ring expander, install the two compression rings with the code mark facing upward.

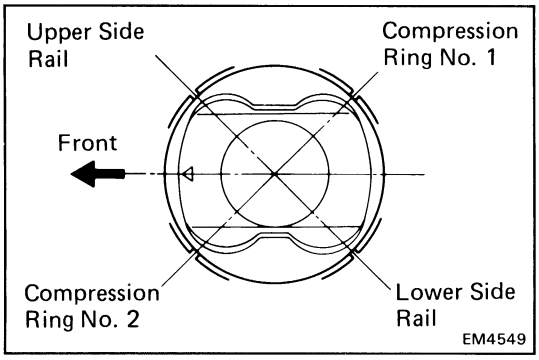

(c) Position the piston rings so that the ring end gaps are as shown.

NOTICE: Do not align the end gaps.

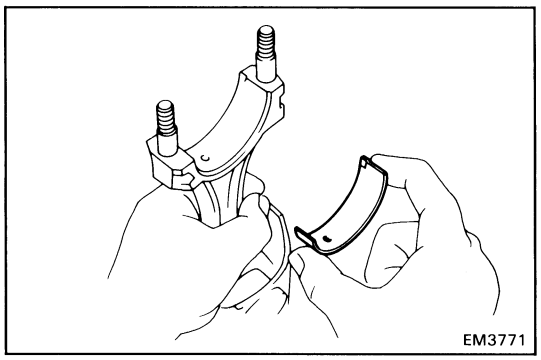

3. INSTALL BEARINGS

(a) Align the bearing claw with the claw groove of the connecting rod or connecting rod cap.

(b) Install the bearing in the connecting rod and rod cap.

NOTICE: Install the bearings with the oil hole in the connecting rod.

ASSEMBLY OF CYLINDER BLOCK

(See page EM-63)

HINT:
- Thoroughly clean all parts to be assembled.
- Before installing the parts, apply new engine oil to all sliding and rotating surfaces.
- Replace all gaskets, O-rings and oil seals with new parts.

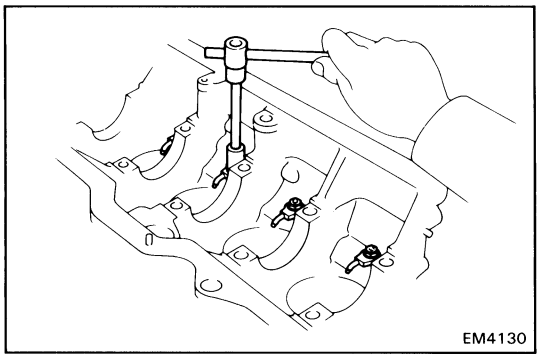

1. (7M-GTE)
INSTALL OIL NOZZLES

Torque: 250 kg-cm (18 ft-lb, 25 N·m)

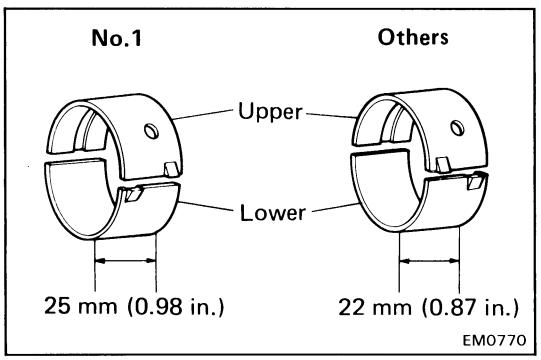

2. INSTALL MAIN BEARINGS

HINT: Different bearings are used for the No.1 and otheres.

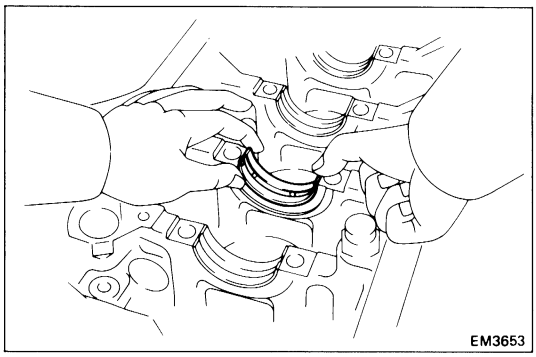

(a) Align the bearing claw with the claw groove of the main bearing cap or cylinder block.

(b) Install the bearing in the cylinder block and bearing caps.

NOTICE: Install the bearing with the oil hole in the block.

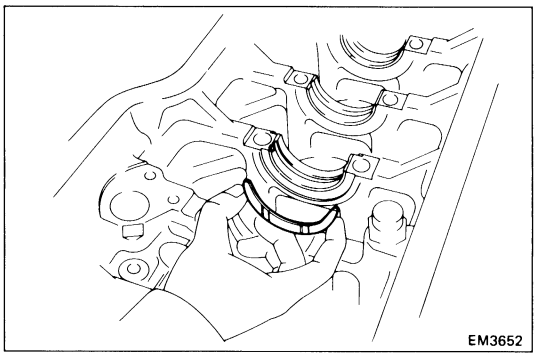

3. INSTALL UPPER THRUST WASHERS

Install the thrust washers under the No. 4 main journal position of the block with the oil grooves facing outward.

4. PLACE CRANKSHAFT ON CYLINDER BLOCK

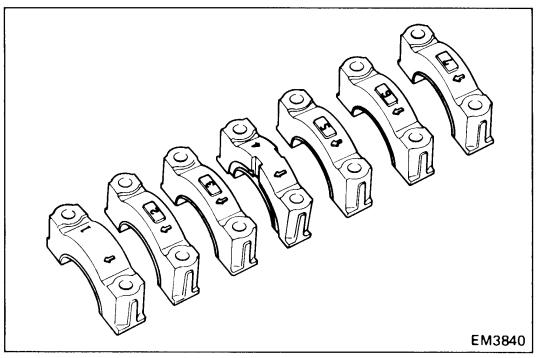

5. INSTALL MAIN BEARING CAPS AND LOWER THRUST WASHERS

HINT: Each bearing cap has a number and front mark.

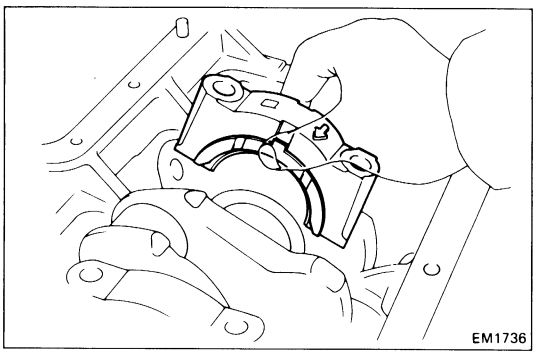

(a) Install the thrust washers on the No. 4 bearing cap with the grooves facing outward.

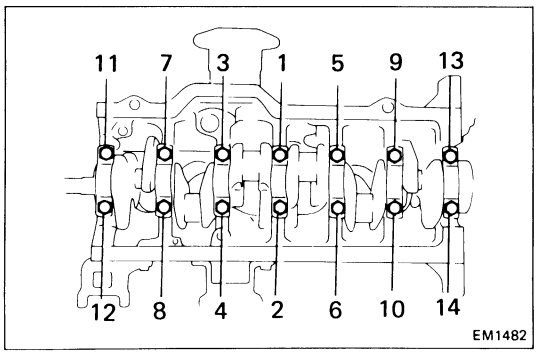

(b) Install the bearing caps in numbered order with arrows facing forward.

(c) Install and uniformly tighten the fourteen cap bolts in several passes, in the sequence shown.

Torque: 1,040 kg-cm (75 ft-lb, 102 N·m)

(d) Check that the crankshaft turns smoothly.

(e) Check the crankshaft thrust clearance.
(See step 21 on page EM-71)

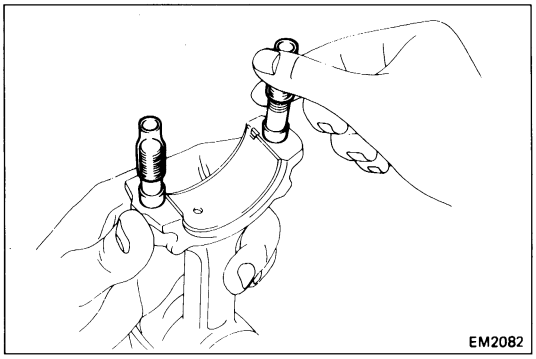

6. INSTALL PISTON AND CONNECTING ROD ASSEMBLIES

(a) Cover the connecting rod bolts with a short piece of hose to protect the crankshaft from damage.

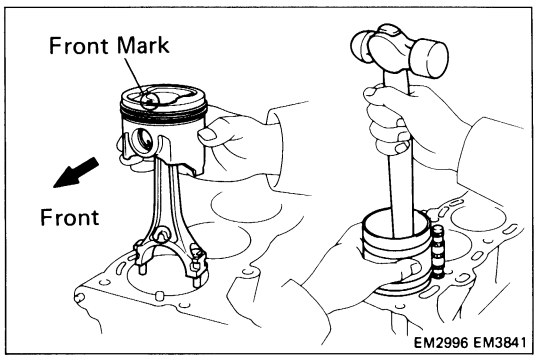

(b) Using a piston ring compressor, push the correctly numbered piston and connecting rod assemblies into each cylinder with the front mark of the piston facing forward.

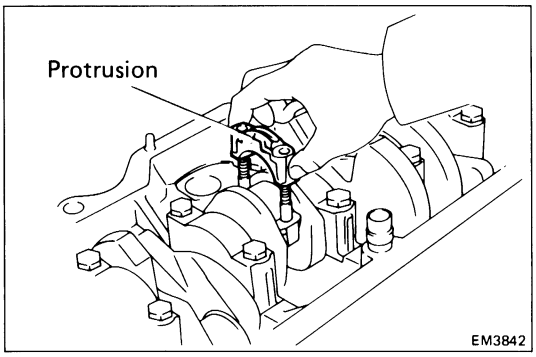

7. INSTALL CONNECTING ROD CAPS

(a) Match the numbered cap with the numbered connecting rod.

(b) Install the cap with the protrusion facing forward.

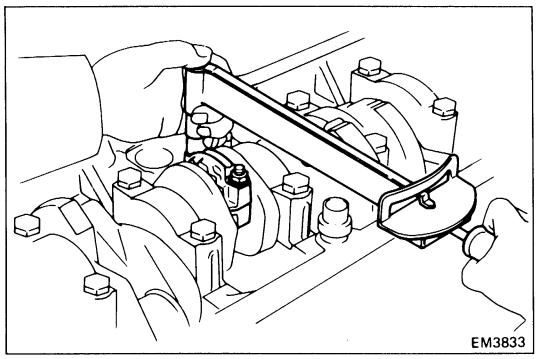

(c) Apply a light coat of engine oil on the threads and under the nuts of the connecting rod cap.

(d) Install and alternately tighten the cap nuts in several passes.

Torque: 650 kg-cm (47 ft-lb, 64 N·m)

(e) Check that the crankshaft turns smoothly.

(f) Check the connecting rod thrust clearance. (See step 18 on page EM-68)

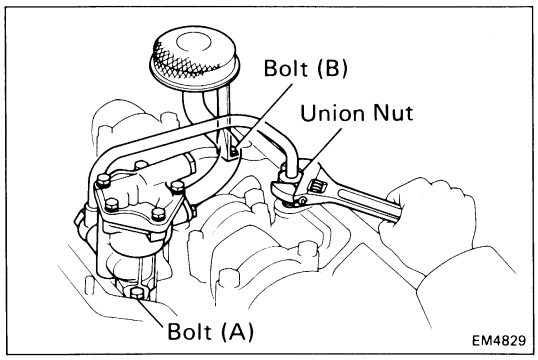

8. INSTALL OIL PUMP ASSEMBLY

(a) Clean the oil pump.

(b) Install the oil pump with the two bolts and union nut.

Torque the bolt and union nut.

Torque:	**Bolt (A)**	**220 kg-cm (16 ft-lb, 22 N·m)**
	Bolt (B)	**60 kg-cm (52 in.-lb, 5.9 N·m)**
	Union nut	**350 kg-cm (25 ft-lb, 34 N·m)**

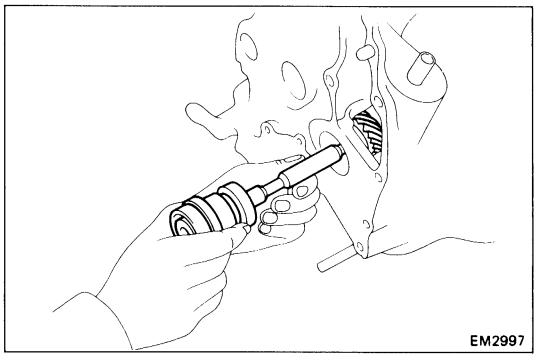

9. INSTALL OIL PUMP DRIVE SHAFT

(a) While turning the drive shaft, insert slowly to avoid damaging the drive shaft bearing.

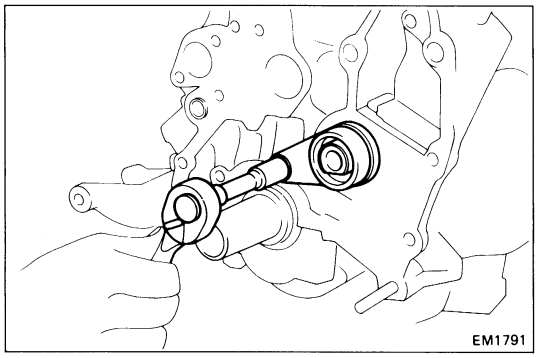

(b) Install the bolt.

Torque: 130 kg-cm (9 ft-lb, 13 N·m)

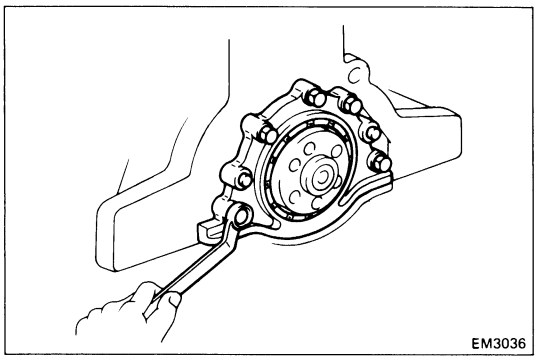

10. INSTALL REAR OIL SEAL RETAINER

Install a new gasket and rear oil seal retainer with the five bolts.

Torque: 130 kg-cm (9 ft-lb, 13 N·m)

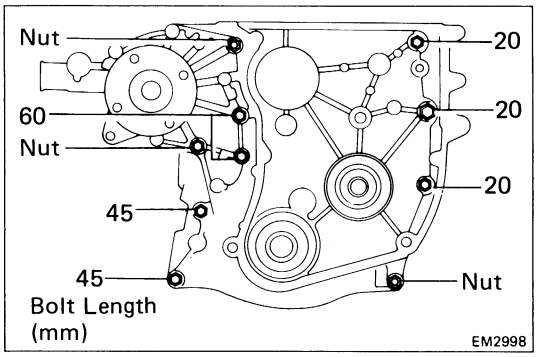

11. INSTALL TIMING BELT CASE WITH WATER PUMP

(a) Position new gaskets on the cylinder block.

(b) Apply sealant to two or three threads of the 10 mm bolt end.

Sealant: Part No. 08833-00070, THREE BOND 1324 or equivalent

(c) Install the timing belt case with the seven bolts and three nuts.

Torque:
12 mm head bolt and nut
195 kg-cm (14 ft-lb, 19 N·m)
14 mm head bolt
400 kg-cm (29 ft-lb, 39 N·m)

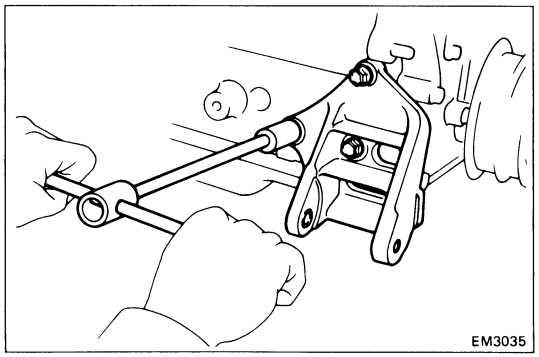

12. INSTALL OIL PAN
(See page LU-12)

13. INSTALL PS PUMP BRACKET

14. INSTALL OIL HOLE COVER PLATE

Install a new gasket and oil hole cover plate with the two bolts.

15. (7M-GE)
INSTALL NEW OIL FILTER
(See page LU-5)

16. INSTALL ENGINE MOUNTING BRACKETS

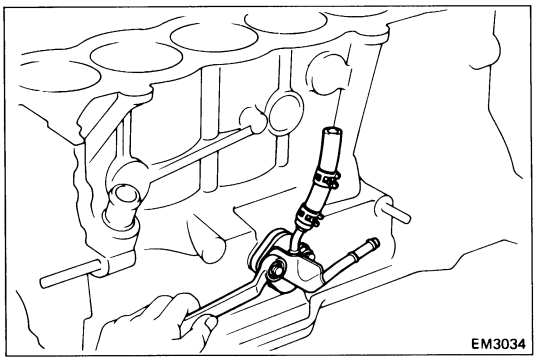

17. INSTALL FUEL RETURN PIPE SUPPORT

Install a new insulator and fuel pipe support with the two nuts.

Torque: 130 kg-cm (89 ft-lb, 13 N·m)

18. (7M-GE)
INSTALL VACUUM CONTROL VALVE SET

19. INSTALL GROUND STRAP TO CYLINDER BLOCK

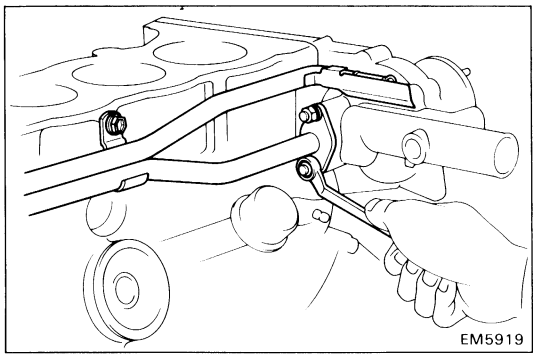

20. INSTALL WATER BY-PASS PIPE

(a) Install a new gasket and water by-pass pipe to the timing belt case with the two nuts.

Torque: 140 kg-cm (10 ft-lb, 14 N·m)

(b) Install the water by-pass pipe to the cylinder block with the three bolts.

Torque: 130 kg-cm (9 ft-lb, 13 N·m)

21. INSTALL CYLINDER HEAD
(See steps 1 and 4 to 16 and 18 on pages EM-55 to 61)

22. INSTALL TIMING BELT
(See steps 1 to 8, 10 to 12 and 16 on pages EM-28 to 31)

23. REMOVE ENGINE STAND

24. INSTALL REAR END PLATE

Torque: 130 kg-cm (9 ft-lb, 13 N·m)

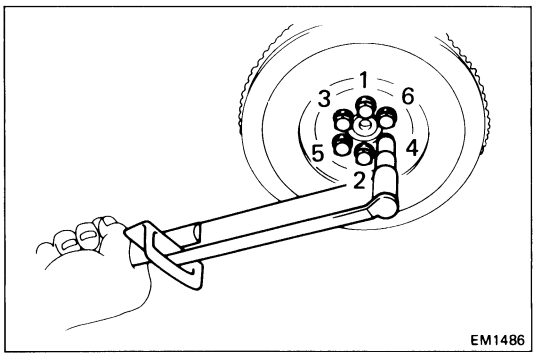

25. INSTALL FLYWHEEL OR DRIVE PLATE ON CRANKSHAFT

(a) Install the flywheel or drive plate on crankshaft.

(b) Apply a light coat of engine oil on the threads and under the bolt heads.

(c) Install and uniformly tighten the bolts in several passes, in the sequence shown.

Torque: 750 kg-cm (54 ft-lb, 74 N·m)

INSTALLATION OF ENGINE

1. (7M-GE)
   INSTALL CLUTCH DISC AND COVER
   (See page CL-15)

2. INSTALL TRANSMISSION TO ENGINE

3. (A/T)
   INSTALL A/T OIL COOLER PIPES

4. INSTALL ENGINE WITH TRANSMISSION IN VEHICLE
   (a) Attach the engine hoist chain to the engine hangers.
   (b) Lower the engine into the engine compartment.
   (c) Align the engine with the transmission and engine mounting supports.
   (d) Install the engine mounting washers and nuts on each side of the engine.
   (e) Remove the hoist chain.

5. RAISE VEHICLE

6. INSTALL ENGINE REAR SUPPORT MEMBER WITH GROUND STRAP TO BODY

7. INSTALL FRONT CROSS MEMBER

8. (M/T)
   INSTALL CLUTCH RELEASE CYLINDER

9. (A/T)
   INSTALL MANUAL SHIFT LINKAGE
   (See page AT-19)

10. CONNECT SPEEDOMETER CABLE

11. INSTALL PROPELLER SHAFT
    (See page PR-9)

12. INSTALL EXHAUST PIPE

13. CONNECT FUEL HOSES

14. (7M-GTE)
    INSTALL ENGINE MOUNTING ABSORBER

15. CONNECT GROUND STRAP TO FUEL HOSE CLAMP

16. (M/T)
    INSTALL SHIFT LEVER

17. CONNECT ENGINE OIL COOLER HOSES

18. INSTALL PS PUMP

19. (7M-GTE)
    INSTALL NO.6 AIR CLEANER HOSE

20. INSTALL A/C COMPRESSOR

21. CONNECT HEATER HOSES

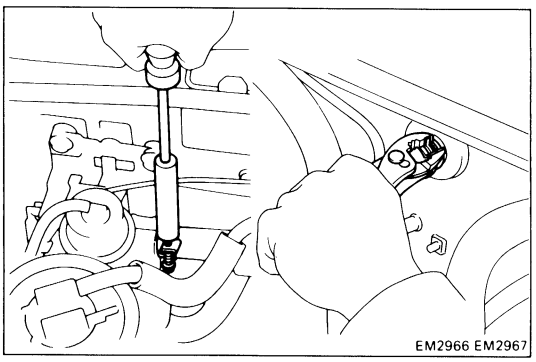
EM2966 EM2967

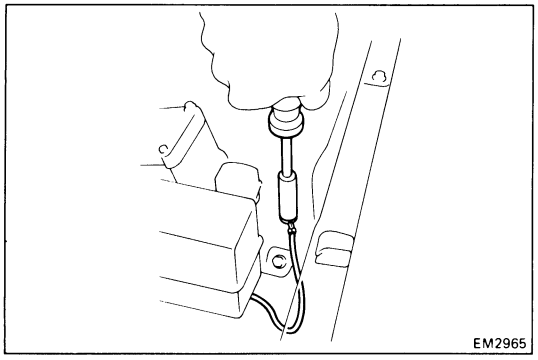

22. CONNECT FOLLOWING CONNECTORS AND WIRES:

(a) ECU and ECT connectors

(b) Ground strap to engine rear side

(c) Heater valve connector

(d) (7M-GE)
Oxygen sensor connector

(e) Alternator connector and wire

(f) Main relay connector

(g) (7M-GE)
Ignition coil connector

(7M-GTE)
Igniter connector

(h) (7M-GTE)
Solenoid resister connector

(i) Check connector

(j) Theft deterrent horn connector

(k) Noise filter connector

(l) Battery positive cable to battery

(m) Ground strap to LH front fender apron

23. CONNECT FOLLOWING HOSES:

(a) Charcoal canister hose

(b) Cruise control hose

(c) Heater valve hose

(d) Brake booster hose

24. INSTALL PS BELT
(See page MA-4)

25. INSTALL ALTERNATOR DRIVE BELT, WATER PUMP PULLEY AND FLUID COUPLING
(See page CO-7)

26. INSTALL A/C BELT
(See page MA-4)

27. INSTALL RADIATOR
(See page CO-14)

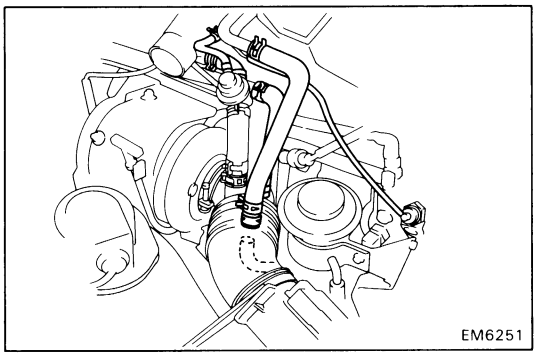

28. (7M-GTE)
INSTALL NO.7 AIR CLEANER HOSE WITH AIR FLOW METER AND AIR CLEANER CAP

(a) Connect the PS air hose.

(b) Connect the air flow meter connector.

(c) Connect the three air hose and PCV hose.

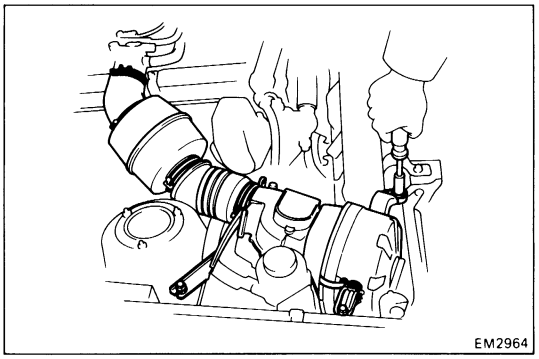

29. (7M-GE)
INSTALL AIR CLEANER CASE WITH HOSES

(a) Install the air cleaner case with hoses with the three bolts.

(b) Connect the PS air hose.

(c) Connect the air flow meter connector.

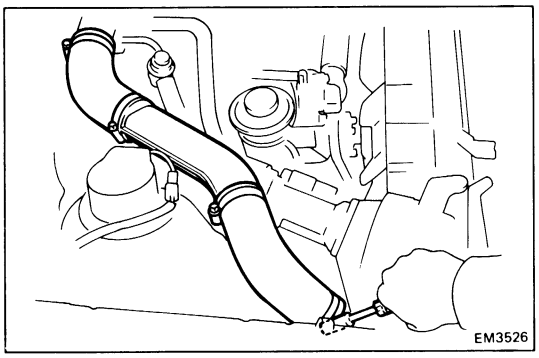

30. (7M-GTE)
INSTALL NO.4 AIR CLEANER PIPE WITH NO.1 AND NO.2 AIR CLEANER HOSES

31. FILL WITH ENGINE OIL
(See page LU-6)

32. FILL WITH COOLANT
(See page CO-5)

33. INSTALL HOOD

34. CONNECT CABLE TO NEGATIVE TERMINAL OF BATTERY

35. START ENGINE

Warm up the engine and inspect for leaks.

36. INSTALL ENGINE UNDER COVER

37. PERFORM ENGINE ADJUSTMENT

Recheck the ignition timing.
(See page IG-20)

38. ROAD TEST

Road test vehicle.

39. RECHECK COOLANT AND ENGINE OIL LEVELS

EXHAUST SYSTEM

Page

EXHAUST PIPE EX-2

EXHAUST PIPE

COMPONENTS

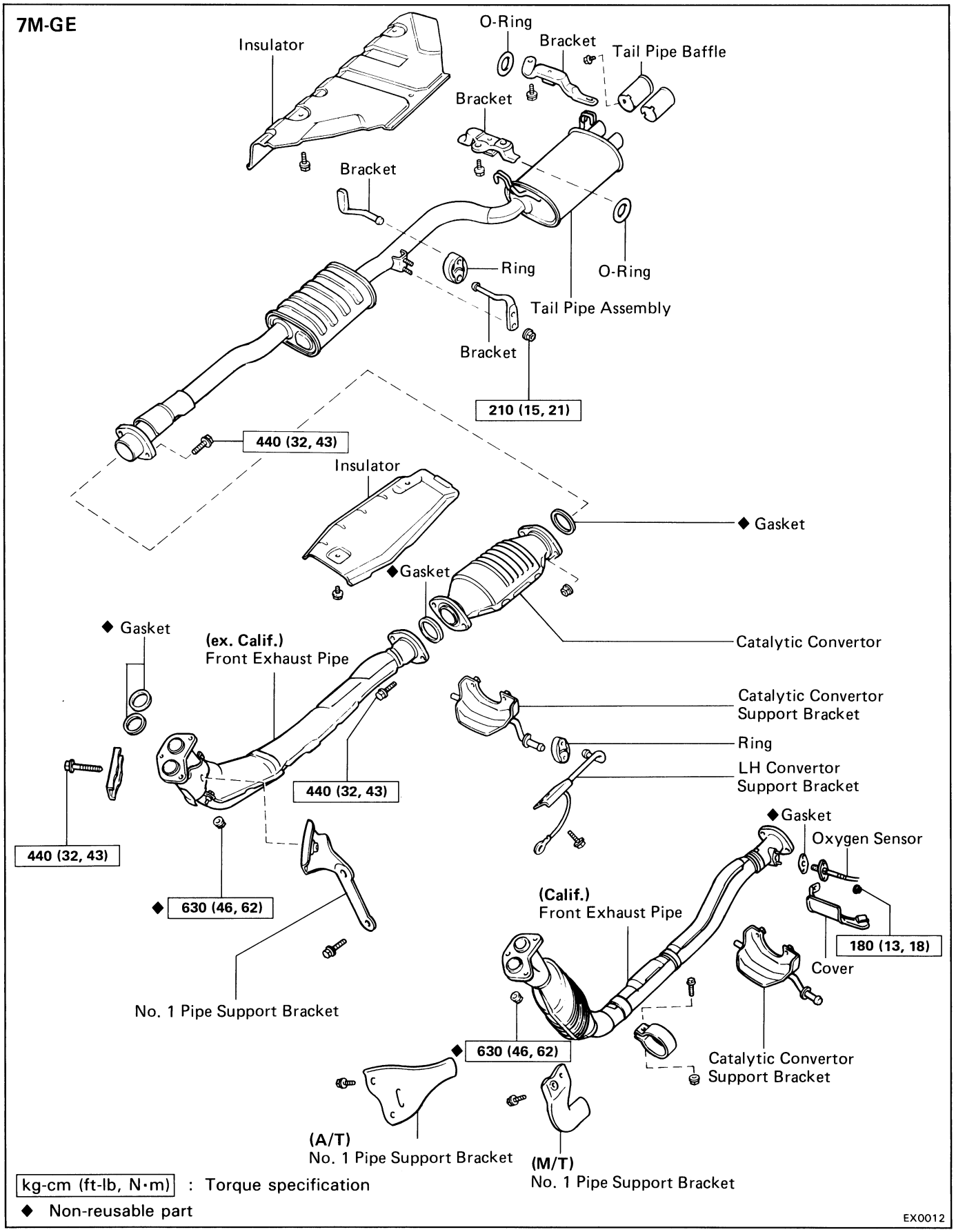

kg-cm (ft-lb, N·m) : Torque specification

◆ Non-reusable part

EX0012

COMPONENTS (Cont'd)

7M-GTE

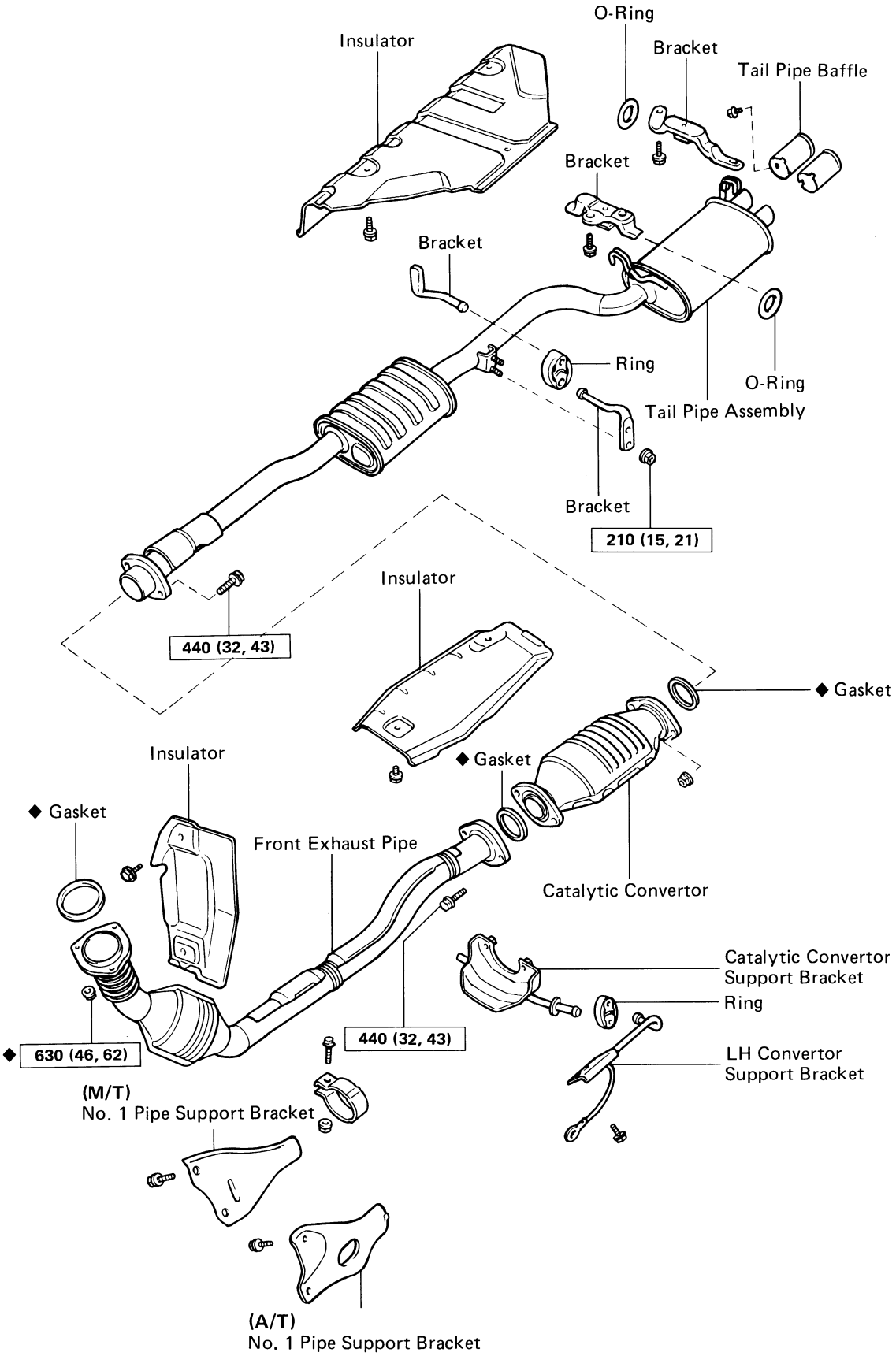

kg-cm (ft-lb, N·m) : Torque specification

◆ Non-reusable part

EX0011

TURBOCHARGER SYSTEM

	Page
DESCRIPTION	TC-2
PRECAUTIONS	TC-4
TROUBLESHOOTING	TC-5
TURBOCHARGER	TC-7

DESCRIPTION

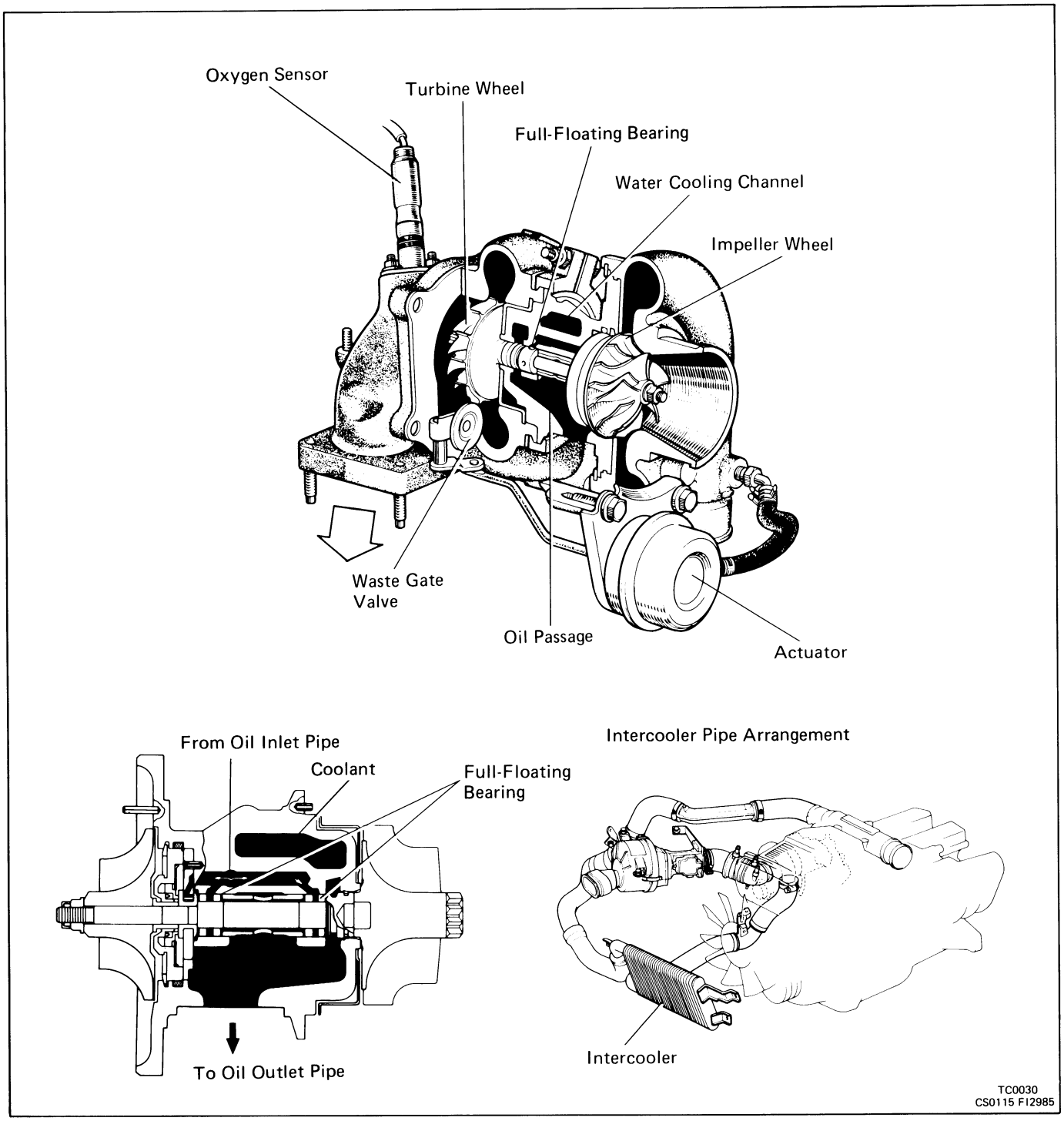

The turbocharger is a device which increases engine output by sending a greater amount of air-fuel mixture to the engine than under normal conditions. Engine output depends upon the amount of the air-fuel mixture ignited per unit of time. Therefore, to increase engine output, the most effective method is to send a greater amount of air-fuel mixture into the cylinder.

In other words, by installing a special turbocharger and providing more air-fuel mixture than usual, engine output can be increased by increasing the average combustion pressure without increasing the engine speed.

Superchargers are either turbocharger type (using exhaust gas to turn the turbine) or supercharger type (using the engine crankshaft etc., to mechanically the pump, etc). For the Supra 7M-GTE engine, the turbocharger type has been adopted.

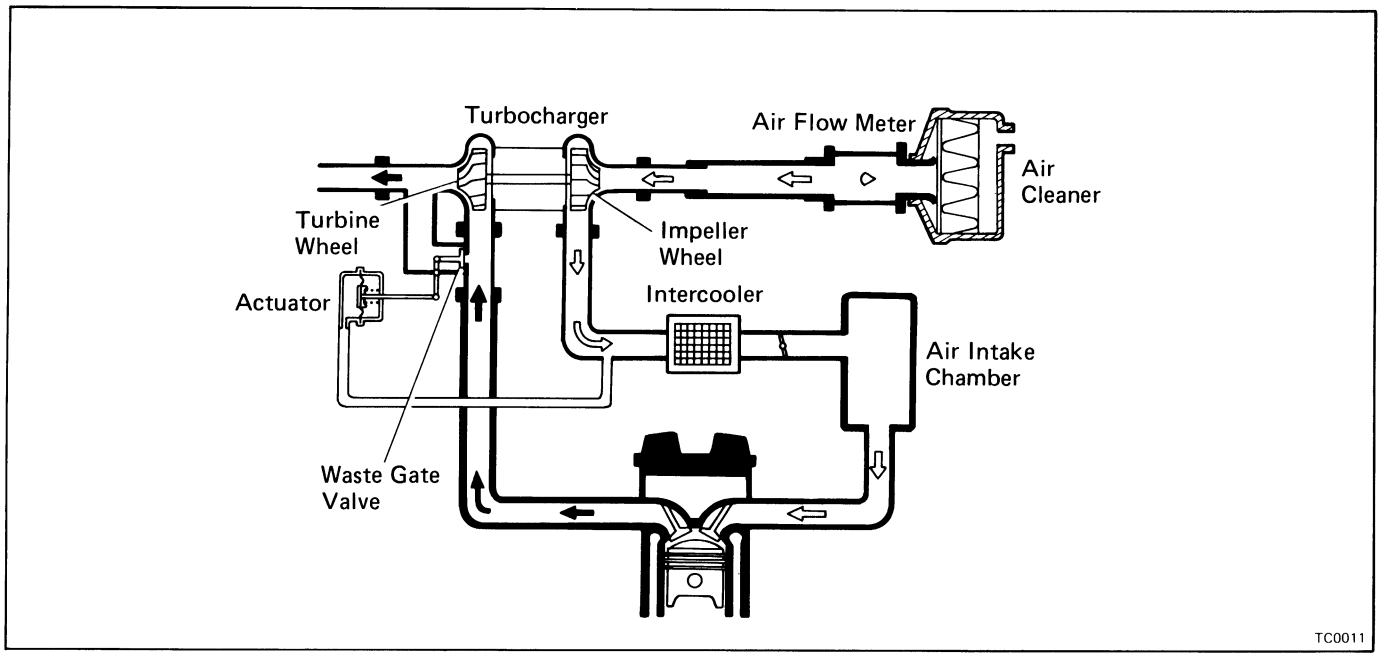

Operation of the Turbocharger

Exhaust gas acts on the turbine wheel inside the turbine housing, causing it to revolve. When the turbine revolves, the impeller wheel which is located on the same shaft also revolves, compressing the intake air which has passed through the air flow meter from the air cleaner. When expelled from the compressor housing the compressed air is supplied to the cylinders. When the engine speed increases, the exhaust gas volume increases and the turbine wheel revolutions increase (approx. 20,000 rpm — 110,000 rpm), thus the turbocharged air pressure grows greater and engine output increases.

Waste Gate Valve

Although on the one hand high output is achieved by turbocharging, if the turbocharged air pressure becomes too high, knocking occurs and on the contrary, a reduction in engine output is caused. If the turbocharged air pressure exceeds the prescribed air pressure, the flow of exhaust gas bypasses the turbine, controlling turbine wheel revolutions and turbocharge air pressure. This by-pass valve which controls the quantity of exhaust gas flowing to the turbine is called the waste gate valve.

When the supercharged air pressure exceeds the prescribed pressure, the actuator operates, the waste gate valve opens and part of the exhaust gas by-passes the turbine. This causes a drop in the turbine revolution rate and controls the supercharged air within the prescribed limits.

Intercooler

The intercooler cools the turbocharged air (intake air) put out by the turbocharger, thereby increasing the air density. As the air intake efficiency increases, the gas temperature in the combustion chamber falls and the occurrence of knocking is suppressed giving an increases engine output.

The Supra 7M-GTE intercooler is an air cooling type located at the front of the vehicle, utilizing the vehicle windstream to cool the turbocharged air.

PRECAUTIONS

1. **Do not stop the engine immediately after pulling a trailer or high speed or uphill driving. Idle the engine for 20 — 120 seconds, depending on the severity of the driving condition.**
2. **Avoid sudden racing or acceleration immediately after starting a cold engine.**
3. **If the engine is run with the air cleaner removed, foreign material entering will damage the wheels which run at extremely high speed.**
4. **If the turbocharger is defective and must be replaced, first check for the cause of the defect in reference to the following items and replace parts if necessary:**
   - **Engine oil level and quality**
   - **Conditions under which the turbocharger was used**
   - **Oil lines leading to the turbocharger**

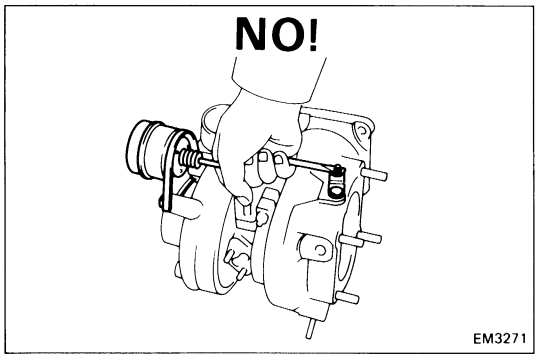

5. Use caution when removing and reinstalling the turbocharger assembly. Do not drop it or bang it against anything or grasp it by easily-deformed parts, such as the actuator or rod, when moving it.
6. Before removing the turbocharger, plug the intake and exhaust ports and oil inlet to prevent entry of dirt or other foreign material.

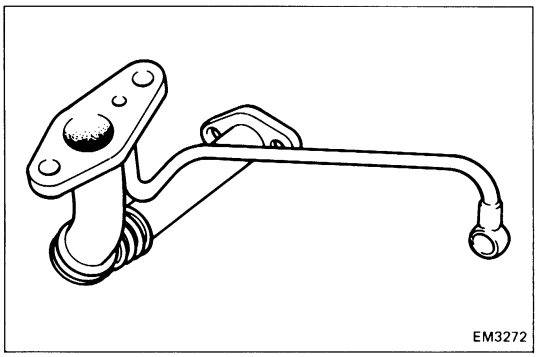

7. If replacing the turbocharger, check for accumulation of sludge particles in the oil pipes and, if necessary, replace the oil pipes.
8. Completely remove the gasket adhered to the lubrication oil pipe flange and turbocharger oil flange.
9. If replacing bolts or nuts, do so only with the specified new ones to guard against breakage or deformation.

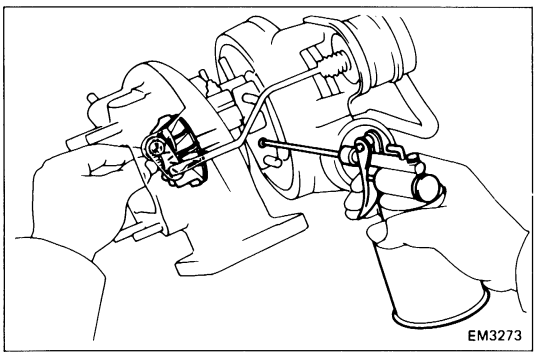

10. If replacing the turbocharger, put 20 cc (1.2 cu in.) of oil into the turbocharger oil inlet and turn the impeller wheel by hand to spread oil to the bearing.
11. If overhauling or replacing the engine, cut the fuel supply after reassembly and crank the engine for 30 seconds to distribute oil throughout the engine. Allow the engine to idle for 60 seconds.

TROUBLESHOOTING

HINT: Before troubleshooting the turbocharger, first check the engine itself. (Valve clearance, engine compression, ignition timing etc.)

INSUFFICIENT ACCELERATION, LACK OF POWER OR EXCESSIVE FUEL CONSUMPTION

(Possible Cause)	(Check Procedure and Correction Method)
1. TURBOCHARGING PRESSURE TOO LOW	Check turbocharging pressure. (See page TC-8) **Turbocharging pressure:** **M/T 0.39 – 0.53 kg/cm^2 (5.5 – 7.5 psi, 38 – 52 kPa)** **A/T 0.34 – 0.42 kg/cm^2 (4.8 – 6.0 psi, 33 – 41 kPa)** If the pressure is below specification, begin diagnosis from item 2.
2. RESTRICTED INTAKE AIR SYSTEM	Check intake air system, and repair or replace parts as necessary. (See page TC-7)
3. LEAK IN INTAKE AIR SYSTEM	Check intake air system, and repair or replace parts as necessary. (See page TC-7)
4. RESTRICTED EXHAUST SYSTEM	Check exhaust system, and repair or replace parts as necessary. (See page TC-7)
5. LEAK IN EXHAUST SYSTEM	Check exhaust system, and repair or replace parts as necessary. (See page TC-7)
6. ERRATIC TURBOCHARGER OPERATION	Check rotation of impeller wheel. If it does not turn or turns with a heavy drag, replace the turbocharger assembly. Check plays of turbine shaft. (See page TC-14) **Axial play: 0.13 mm (0.0051 in.) or less** **Radial play: 0.18 mm (0.0071 in.) or less** If not within specification, replace the turbocharger assembly.

ABNORMAL NOISE

(Possible Cause)	(Check Procedure and Correction Method)
1. TURBOCHARGER INSULATOR RESONANCE	Check for loose, improperly installed or deformed insulator mount bolts and nuts, and repair or replace as necessary.
2. EXHAUST PIPE LEAKING OR VIBRATING	Check for exhaust pipe deformation, loose mount bolts or a damaged gasket, and repair or replace as necessary.
3. ERRATIC TURBOCHARGER OPERATION	Refer to item 6 of INSUFFICIENT ACCELERATION, LACK OF POWER OR EXCESSIVE FUEL CONSUMPTION.

EXCESSIVE OIL CONSUMPTION OR WHITE EXHAUST

(Possible Cause)	(Check Procedure and Correction Method)
FAULTY TURBOCHARGER OIL SEAL	Check for oil leakage in exhaust system. • Remove the turbine elbow from the turbocharger and check for excessive carbon deposits on the turbine wheel. Excessive carbon deposits would indicate a faulty turbocharger. Check for oil leakage in intake air system. • Check for plays in turbine shaft, and replace the turbocharger if necessary. (See page TC-14) **Axial play: 0.13 mm (0.0051 in.) or less** **Radial play: 0.18 mm (0.0071 in.) or less** **NOTICE: Do not mistakenly diagnose ordinary oil mist from the PCV in the blow-by gas as an oil leak from the turbocharger.**

TURBOCHARGER

ON-VEHICLE INSPECTION OF TURBOCHARGER

1. INSPECT INTAKE AIR SYSTEM

Check for leakage or clogging between the air cleaner and turbocharger inlet and between the turbocharger outlet and cylinder head.

- Clogged air cleaner ..... Clean or replace the element
- Hoses collapsed or deformed ..... Repair or replace
- Leakage from connections ..... Check each connection and repair as necessary
- Cracks in components ..... Check and replace as necessary

2. INSPECT EXHAUST SYSTEM

Check for leakage or clogging between the cylinder head and turbocharger inlet and between the turbocharger outlet and exhaust pipe.

- Deformed components ..... Repair or replace
- Foreign material in passages ..... Remove
- Leakage from components ..... Repair or replace
- Cracks in components ..... Check and replace

3. INSPECT OPERATION OF ACTUATOR AND WASTE GATE VALVE

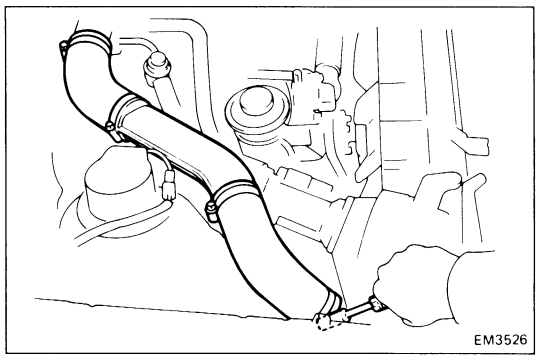
EM3526

(a) Remove the No.4 air cleaner pipe with No.1 and No.2 air cleaner hoses.

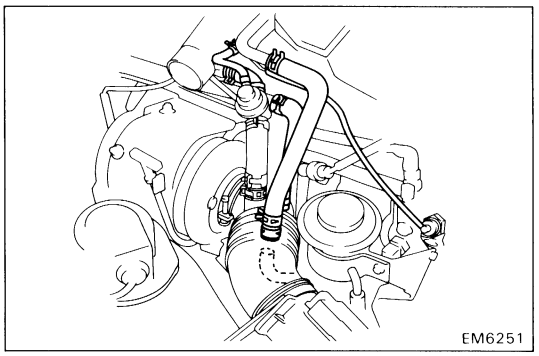
EM6251

(b) Disconnect the air hoses.

(c) Disconnect the air flow meter connector.

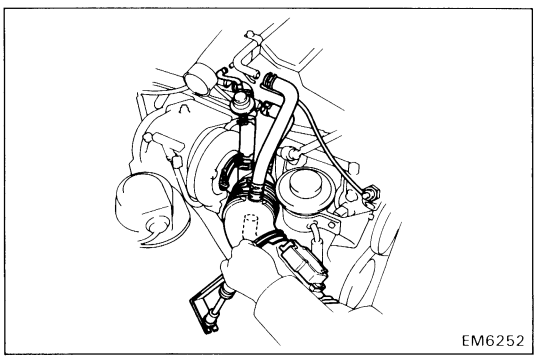
EM6252

(d) Loosen the clamps and remove the bolt.

(e) Remove the No.7 air cleaner hose with air flow meter and air cleaner cap.

(f) Disconnect the PS idle up air hose.

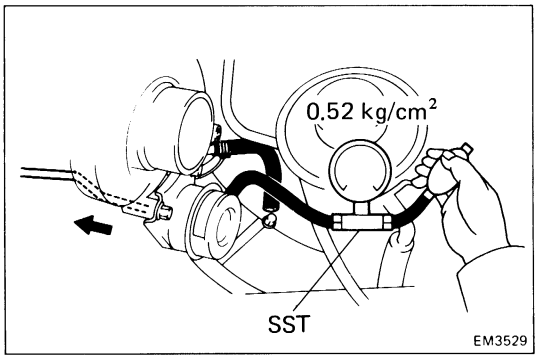

(g) Disconnect the actuator hose.

(h) Using SST (turbocharger pressure gauge), apply approx. 0.52 kg/cm² (7.4 psi, 51 kPa) of pressure to the actuator and check that the rod moves.

SST 09992-00241

If the rod does not move, replace the turbocharger assembly.

NOTICE: Never apply more than 0.8 kg/cm² (11.4 psi 78 kPa) of pressure to the actuator.

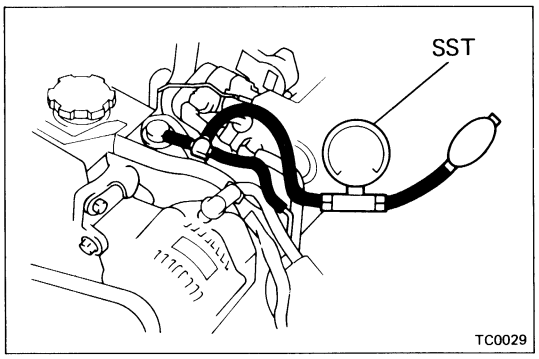

4. CHECK TURBOCHARGING PRESSURE

(a) Install SST (turbocharger pressure gauge) to the pressure regulator with a three way.

SST 09992-00241

(b) (M/T models)
Accelerate the vehicle with the throttle valve fully open after driving at 3-speed at 1,000 rpm. Measure the turbocharging pressure when the engine speed is over 2,500 rpm.

Standard pressure: 0.39 — 0.53 kg/cm²
(5.5 — 7.5 psi, 38 — 52 kPa)

(c) (A/T models)
From a stationary state accelerate the vehicle in "L" range with the throttle valve fully open. Measure the turbochargining pressure when the engine speed is over 3,500 rpm.

Standard pressure: 0.34 — 0.42 kg/cm²
(4.8 — 6.0 psi, 33 — 41 kPa)

If the pressure is less than that specified, check the intake air and exhaust systems for leakage. If there is no leakage, replace the turbocharger assembly.

If the pressure is above specification, check if the actuator hose is disconnected or cracked. If not, replace the turbocharger assembly.

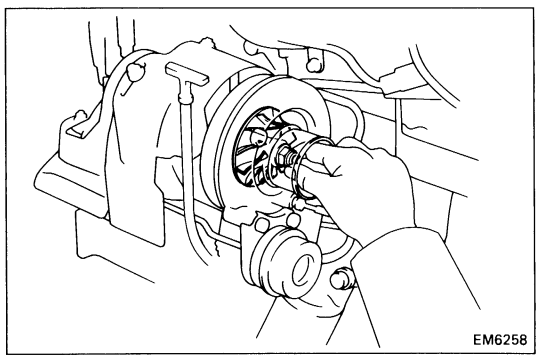

5. INSPECT IMPELLER WHEEL ROTATION

Grasp the edge of the impeller wheel and turn it. Check that it turns smoothly.

If it does not turn or if it turns with a drag, replace the turbocharger assembly.

COMPONENTS

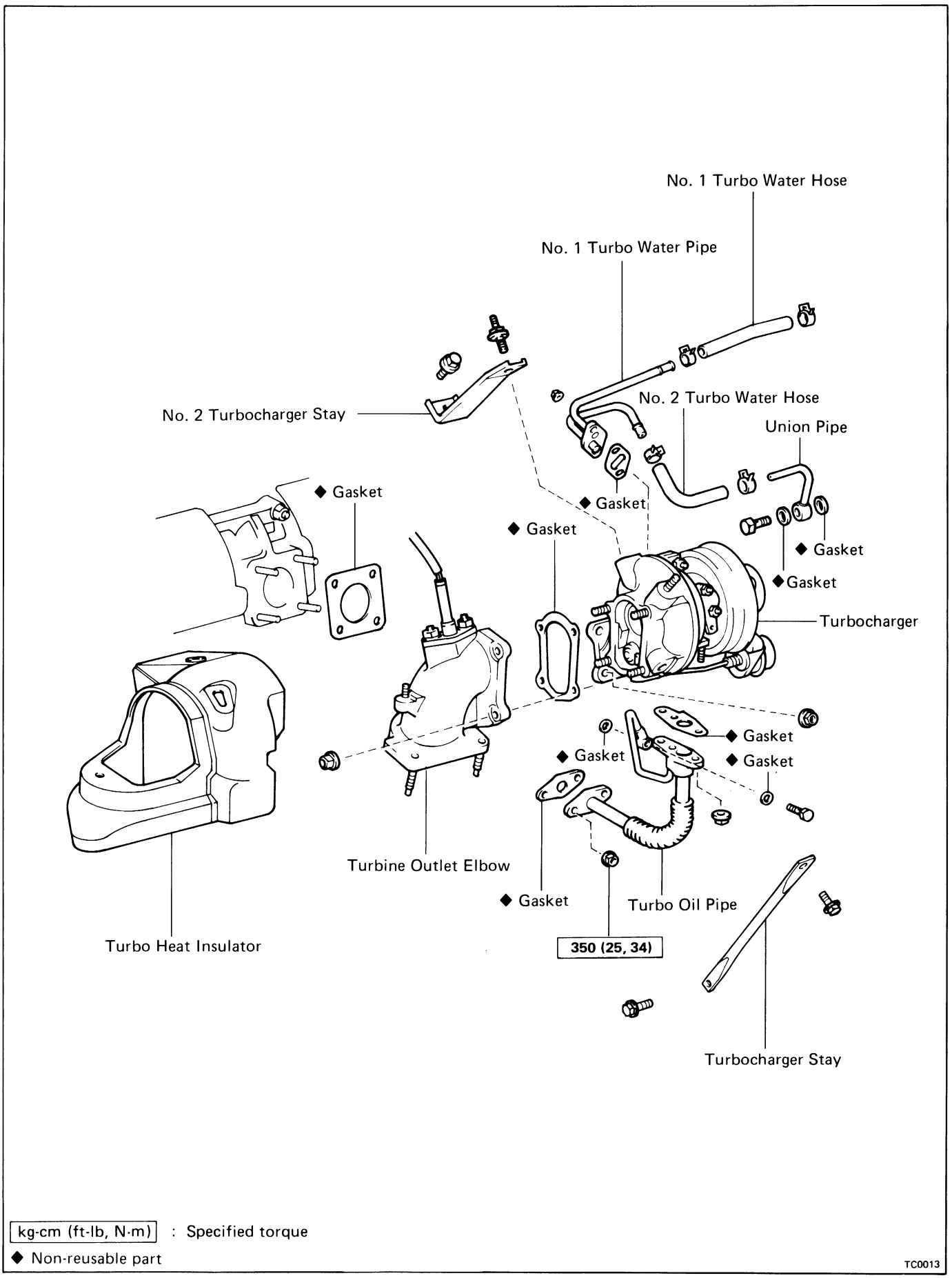

kg-cm (ft-lb, N·m) : Specified torque

◆ Non-reusable part

TC0013

REMOVAL OF TURBOCHARGER

(See page TC-9)

1. **DISCONNECT CABLE FROM NEGATIVE TERMINAL OF BATTERY**

   CAUTION: Work must be started after approx. 20 seconds or longer from the time the ignition switch is turned to the "LOCK" position and the negative (−) terminal cable is disconnected from the battery.

2. **DRAIN COOLANT**

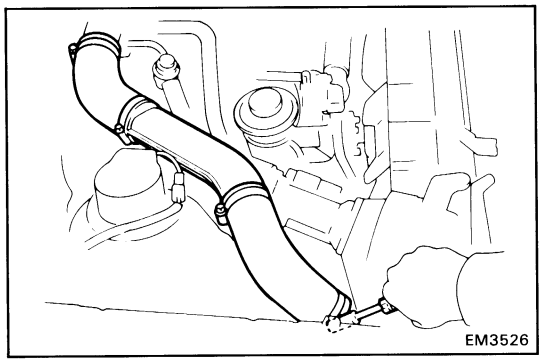

3. **REMOVE NO.4 AIR CLEANER PIPE WITH NO.1 AND NO.2 AIR CLEANER HOSES**

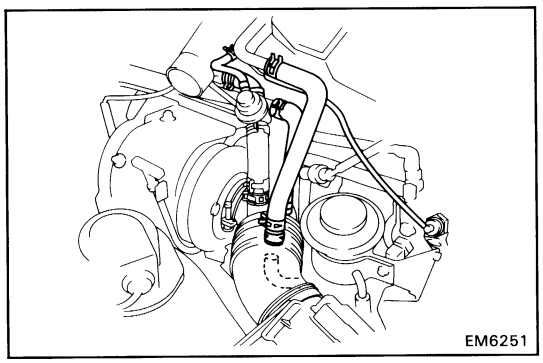

4. **REMOVE NO.7 AIR CLEANER HOSE WITH AIR FLOW METER AND AIR CLEANER CAP**
   (a) Disconnect the three air hoses and PCV hose.
   (b) Disconnect the air flow meter connector.
   (c) Disconnect the PS idle up air hose.

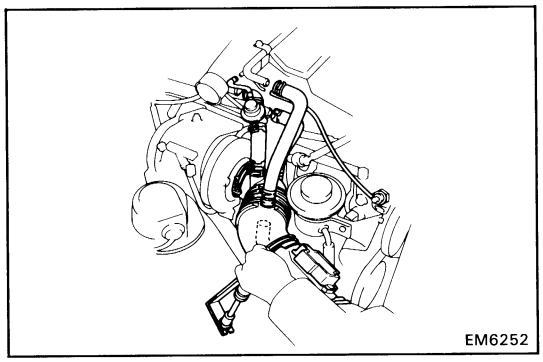

   (d) Loosen the clamps and remove the bolt.
   (e) Remove the No.7 air cleaner hose with air flow meter and air cleaner cap.

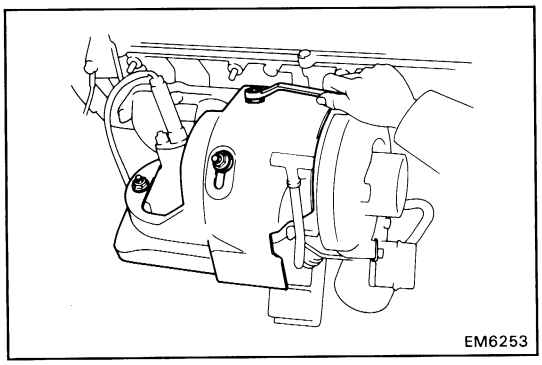

5. **REMOVE TURBO HEAT INSULATOR**
   (a) Disconnect the oxygen sensor connector.
   (b) Remove the three nuts, plate washer and turbo heat insulator.

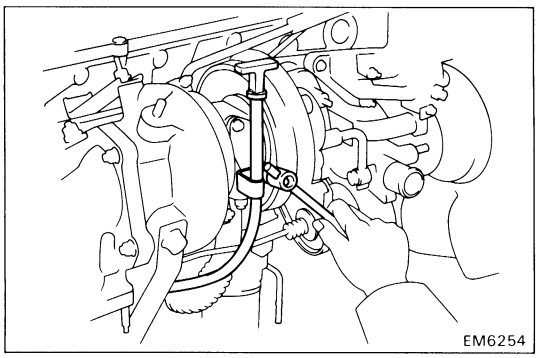
EM6254

6. REMOVE OIL DIPSTICK GUIDE

(a) Remove the oil dipstick.

(b) Remove the bolt and oil dipstick guide.

(c) Remove the O-ring from the oil dipstick guide.

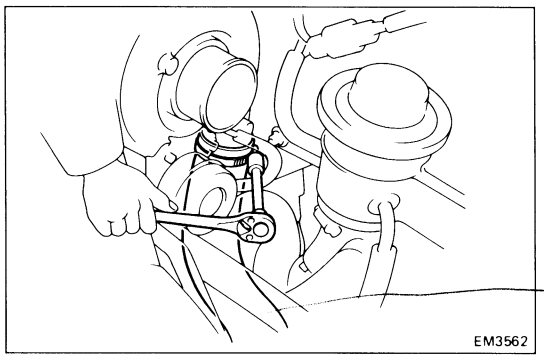
EM3562

7. REMOVE NO.1 AIR CLEANER PIPE WITH NO.6 AIR CLEANER HOSE

(a) Loosen the No.5 and No.6 air cleaner hose clamps.

(b) Remove the No.1 air cleaner pipe mounting bolt.

(c) Remove the No.1 air cleaner pipe with No.6 air cleaner hose.

P/N = 17341-42060 $83.46.

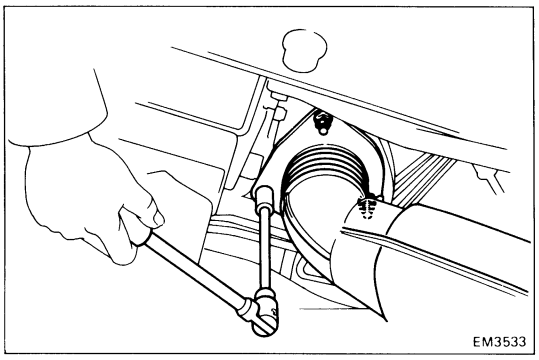
EM3533

8. DISCONNECT FRONT EXHAUST PIPE

(a) Remove the three nuts.

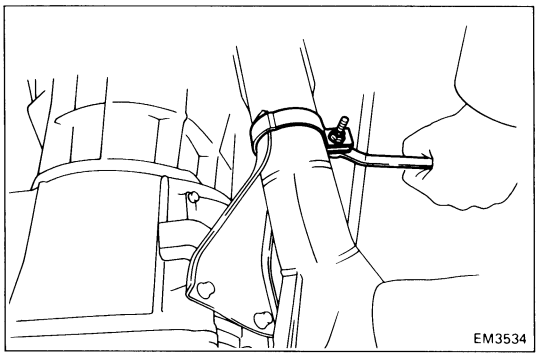
EM3534

(b) Remove the front exhaust pipe clamp.

(c) Disconnect the front exhaust pipe from the exhaust manifold.

(d) Remove the gasket.

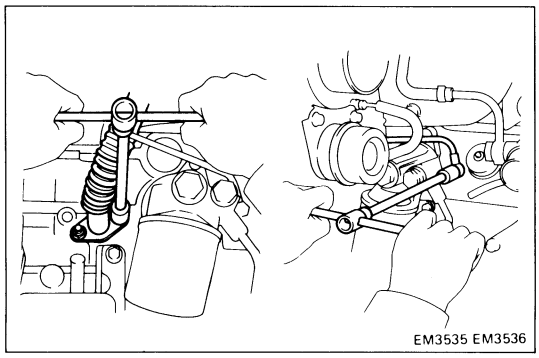
EM3535 EM3536

9. REMOVE TURBO OIL PIPE MOUNTING NUTS

10. REMOVE TURBO OIL PIPE MOUNTING UNION BOLT

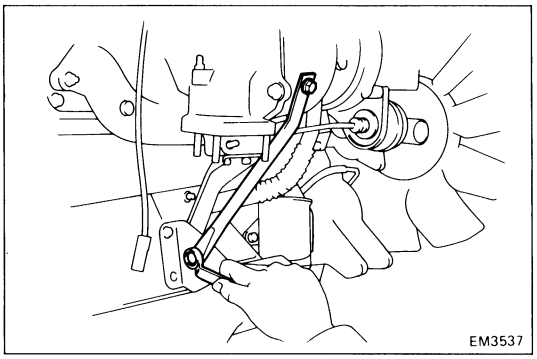

11. REMOVE TURBOCHARGER STAY

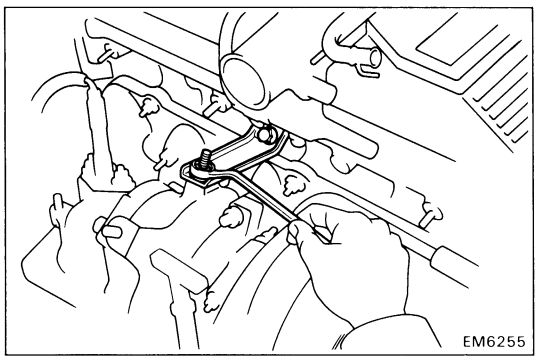

12. REMOVE NO.2 TURBOCHARGER STAY

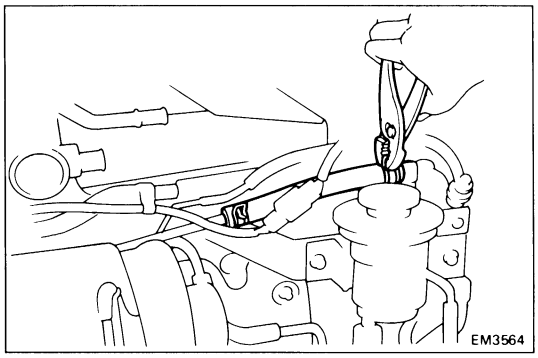

13. DISCONNECT NO.1 TURBO WATER HOSE FROM WATER OUTLET HOUSING

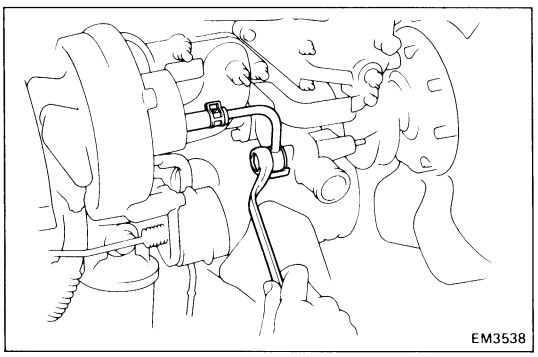

14. DISCONNECT UNION PIPE

Remove the union bolt and gaskets.

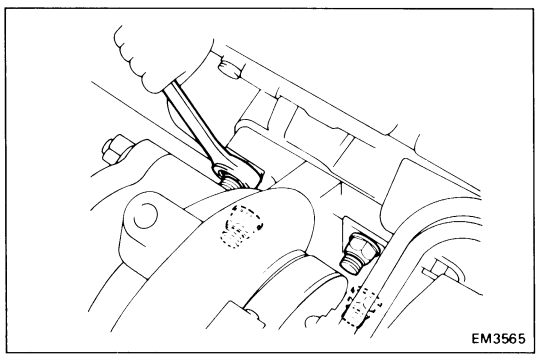

15. REMOVE TURBOCHARGER

Remove the four nuts, turbocharger and gasket.

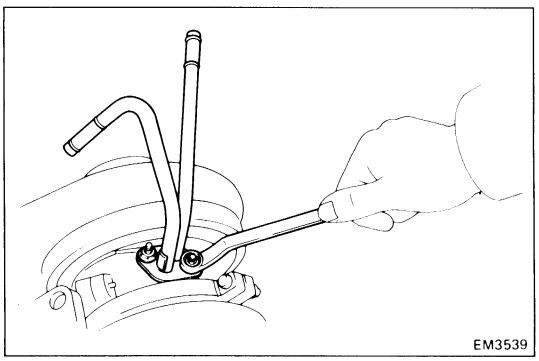

16. REMOVE NO.1 TURBO WATER PIPE

Remove the two nuts, No.1 turbo water pipe and gasket.

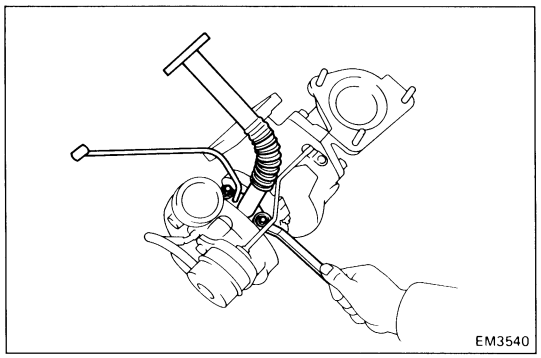

17. REMOVE TURBO OIL PIPE

Remove the two nuts, turbo oil pipe and gasket.

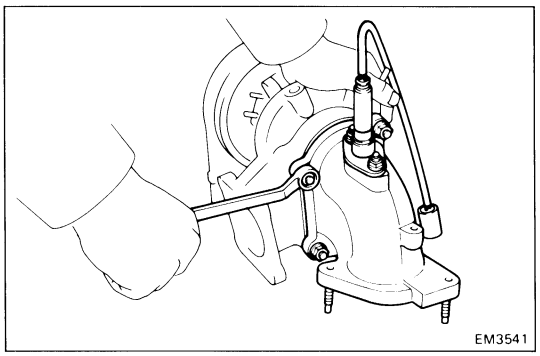

18. REMOVE TURBINE OUTLET ELBOW

Remove the four nuts, turbine outlet elbow and gasket.

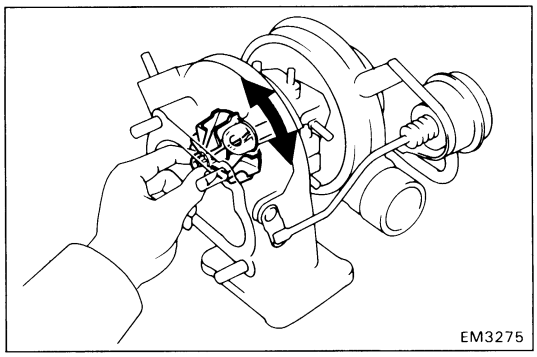

INSPECTION OF TURBOCHARGER

1. INSPECT IMPELLER WHEEL ROTATION

Grasp the edge of the turbine wheel and turn it. Check that the impeller wheel turns smoothly.

If the impeller wheel does not turn or if it turns with a drag, replace the turbocharger assembly.

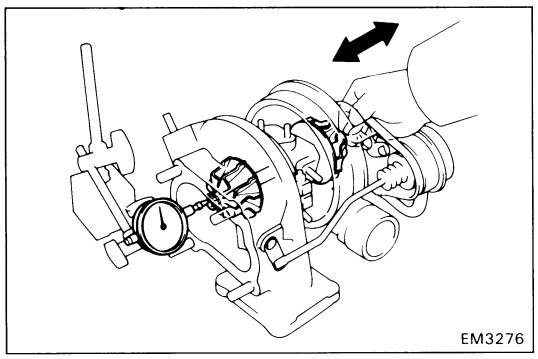

2. INSPECT AXIAL PLAY OF TURBINE SHAFT

Insert a dial indicator into the hole in the turbine wheel on the exhaust side and measure the axial play of the shaft.

Axial play: 0.13 mm (0.0051 in.) or less

If the axial play is not as specified, replace the turbocharger assembly.

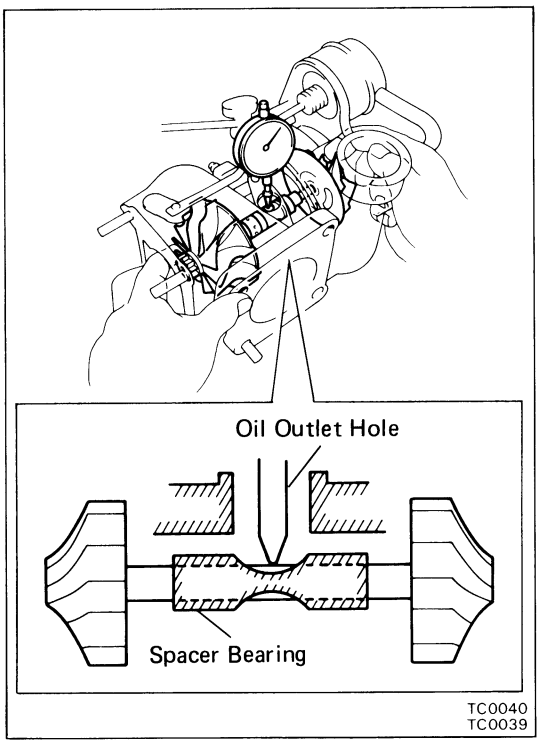

3. INSPECT RADIAL PLAY OF TURBINE SHAFT

(a) From the oil outlet hole, insert the dial indicator through the hole in the spacer bearing and set it in the center of the turbine shaft.

(b) Moving the turbine shaft in a radial direction, measure the radial play of the shaft.

Redial play: 0.18 mm (0.0071 in.) or less

If the radial play is not as specified, replace the turbocharger assembly.

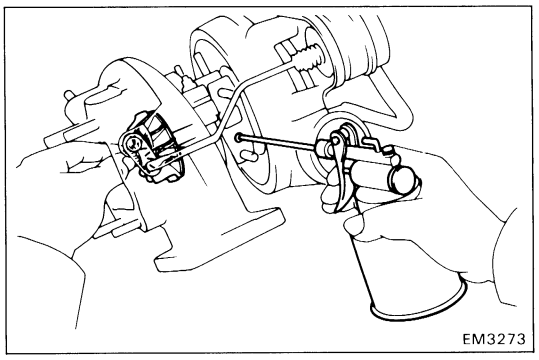

INSTALLATION OF TURBOCHARGER

(See page TC-9)

NOTICE: After replacing the turbocharger assembly, pour approx. 20 cc (1.2 cu in.) of new oil into the oil inlet and turn the impeller wheel by hand to splash oil on the bearing.

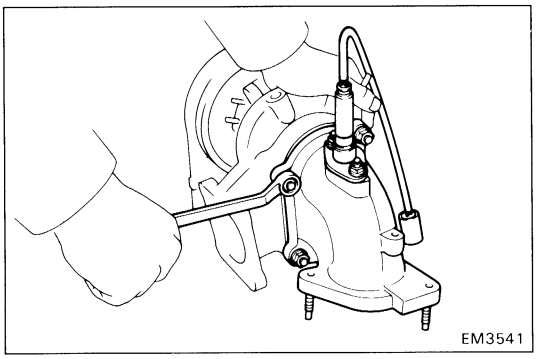

1. **INSTALL TURBINE OUTLET ELBOW**

   Install a new gasket and the turbine outlet elbow with the four nuts.

   Torque: 440 kg-cm (32 ft-lb, 43 N·m)

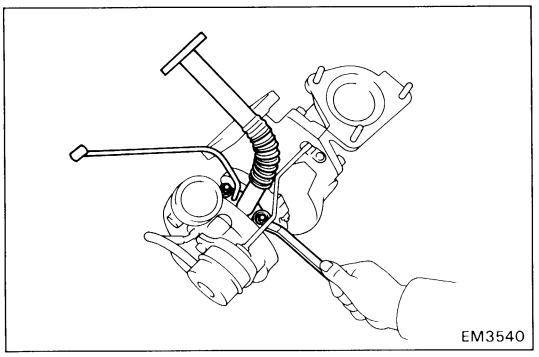

2. **INSTALL TURBO OIL PIPE**

   Install a new gasket and the turbo oil pipe with the two nuts.

   Torque: 130 kg-cm (9 ft-lb, 13 N·m)

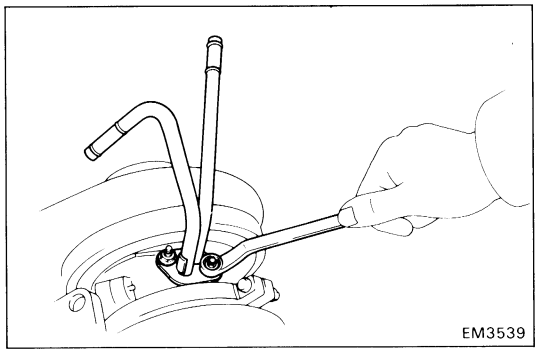

3. **INSTALL NO.1 TURBO WATER PIPE**

   Install a new gasket and the No.1 turbo water pipe with the two nuts.

   Torque: 75 kg-cm (65 in.-lb, 7.4 N·m)

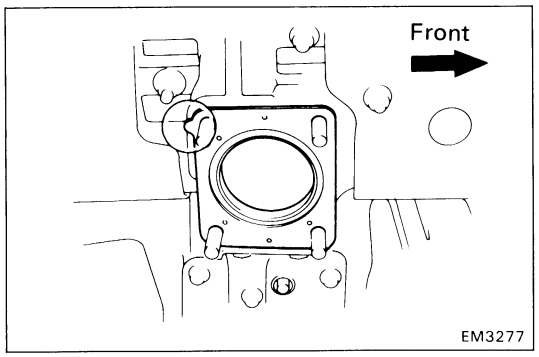

4. **INSTALL TURBOCHARGER**

   (a) Face the new gasket so the protrusion is facing the rear and install on the exhaust manifold.

   (b) Place a new gasket on the oil return hole of the cylinder block.

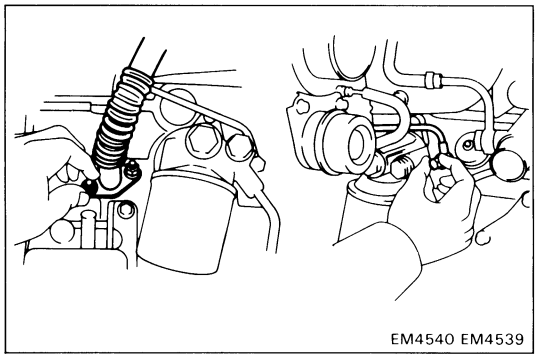
EM4540 EM4539

(c) Install the turbocharger through the turbocharger stud bolts and turbo oil pipe stud bolts.

(d) Temporarily install the four nuts holding the exhaust manifold and turbocharger.

(e) Temporarily install the turbo oil pipe flange nut.

(f) Temporarily install the union bolt with two new gaskets.

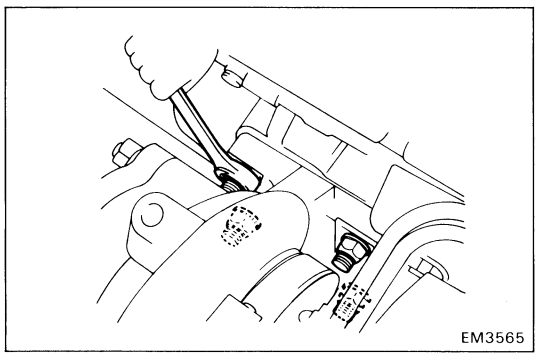
EM3565

(g) Torque the turbocharger mounting nuts.

Torque: 450 kg-cm (33 ft-lb, 44 N·m)

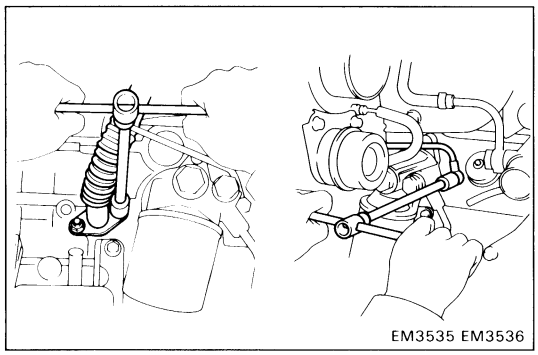
EM3535 EM3536

(h) Torque the oil pipe union bolt and flange nuts.

Torque: Bolt 350 kg-cm (25 ft-lb, 34 N·m)
Nut 130 kg-cm (9 ft-lb, 13 N·m)

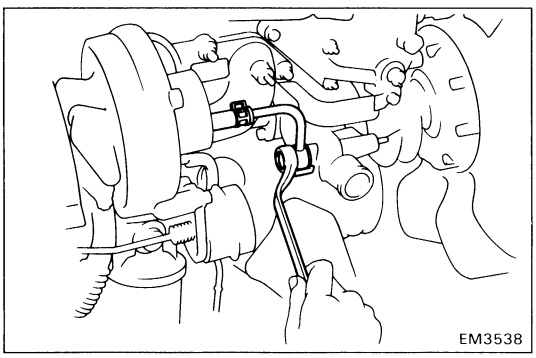
EM3538

5. CONNECT UNION PIPE

Connect the union pipe with the union bolt and two new gaskets.

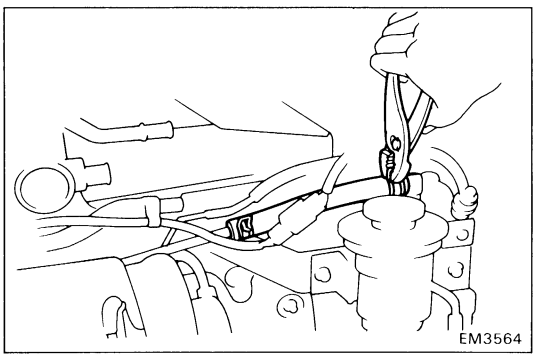
EM3564

6. CONNECT NO.1 TURBO WATER HOSE TO WATER OUTLET HOUSING

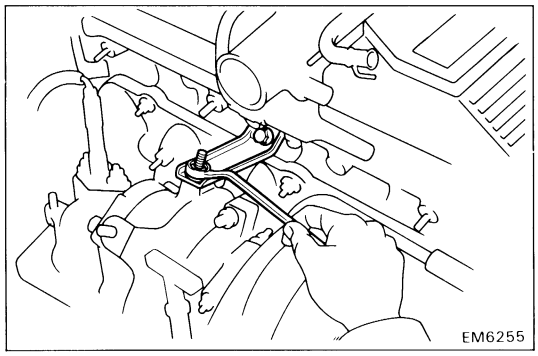

7. INSTALL NO.2 TURBOCHARGER STAY

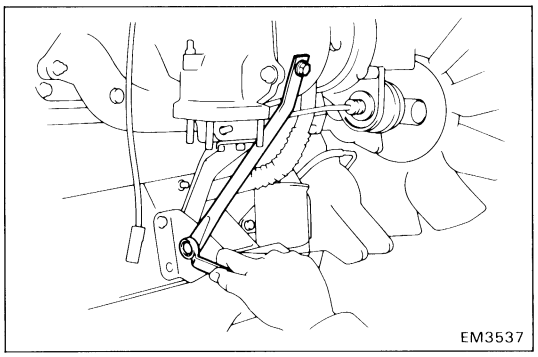

8. INSTALL TURBOCHARGER STAY

Torque: To turbocharger
810 kg-cm (59 ft-lb, 79 N·m)
To engine mounting bracket
590 kg-cm (43 ft-lb, 58 N·m)

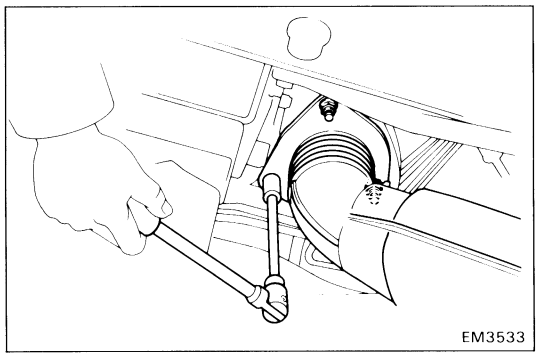

9. CONNECT FRONT EXHAUST PIPE

(a) Install a new gasket to the front exhaust pipe.

(b) Install the front exhaust pipe to the exhaust manifold with new three nuts.

Torque: 630 kg-cm (46 ft-lb, 62 N·m)

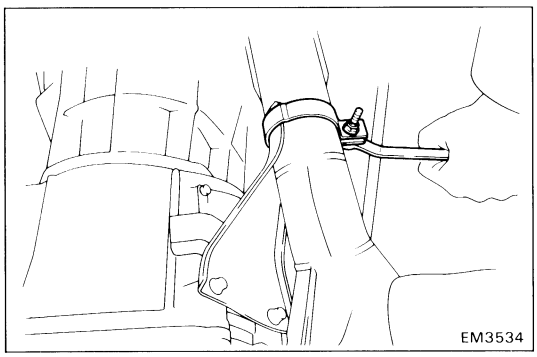

(c) Install the front exhaust pipe clamp.

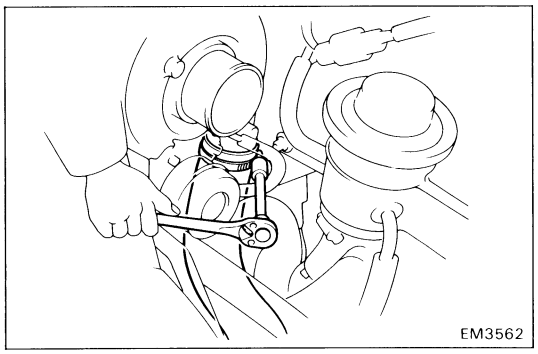

10. INSTALL NO.1 AIR CLEANER PIPE WITH NO.6 AIR CLEANER HOSE

(a) Install the No.1 air cleaner pipe with No.6 air cleaner hose to the No.5 air cleaner hose and turbocharger.

(b) Connect the No.1 air cleaner pipe to bracket with the bolt.

Torque: 130 kg-cm (9 ft-lb, 13 N·m)

(c) Tighten the No.5 and No.6 air hose clamps.

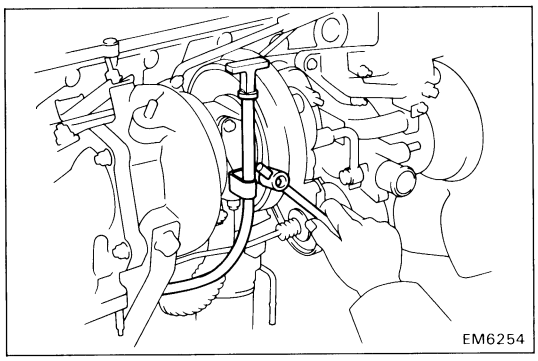

11. INSTALL OIL DIPSTICK GUIDE

(a) Install a new O-ring to the oil dipstick guide.

(b) Insert the oil dipstick guide to the No.2 oil dipstick guide.

(c) Connect the oil dipstick guide to the turbocharger with the bolt.

(d) Install the oil dipstick.

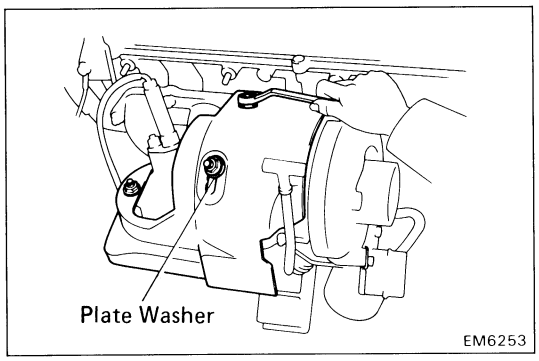

12. INSTALL TURBO HEAT INSULATOR

(a) Install the turbo heat insulator with the plate washer and three nuts.

(b) Connect the oxygen sensor connector.

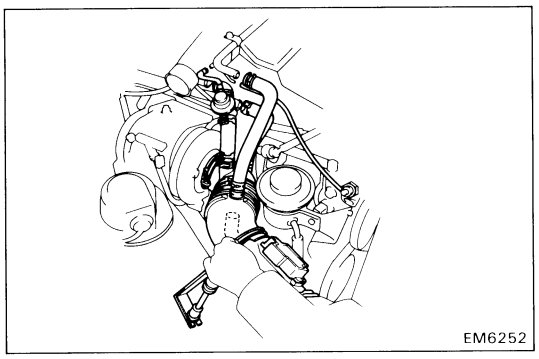

13. INSTALL NO.7 AIR CLEANER HOSE WITH AIR FLOW METER AND AIR CLEANER CAP

(a) Install the No.7 air cleaner hose with air flow meter and air cleaner cap.

(b) Install the bolt and tighten the clamps.

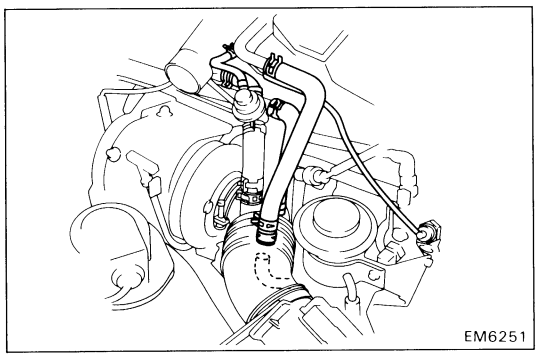

(c) Connect the PS idle up air hose.

(d) Connect the air flow meter connector.

(e) Connect the PCV hose and three air hoses.

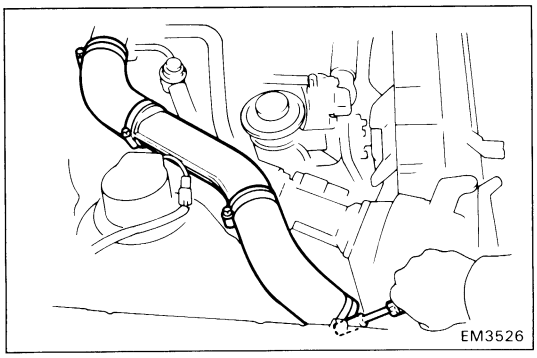

14. INSTALL NO.4 AIR CLEANER PIPE WITH NO.1 AND NO.2 AIR CLEANER HOSES

15. FILL WITH COOLANT
(See page CO-5)

16. CONNECT CABLE TO NEGATIVE TERMINAL OF BATTERY

17. START ENGINE AND CHECK FOR LEAKS

EMISSION CONTROL SYSTEMS

	Page
SYSTEM PURPOSE	EC-2
COMPONENT LAYOUT AND SCHEMATIC DRAWING (7M-GE)	EC-3
COMPONENT LAYOUT AND SCHEMATIC DRAWING (7M-GTE)	EC-4
POSITIVE CRANKCASE VENTILATION (PCV) SYSTEM	EC-5
FUEL EVAPORATIVE EMISSION CONTROL (EVAP) SYSTEM	EC-6
DASH POT (DP) SYSTEM	EC-8
EXHAUST GAS RECIRCULATION (EGR) SYSTEM (7M-GE)	EC-12
EXHAUST GAS RECIRCULATION (EGR) SYSTEM (7M-GTE)	EC-16
THREE-WAY CATALYST (TWC) SYSTEM	EC-20

NOTE: TROUBLESHOOTING
(See pages EM-4 to 6)

SYSTEM PURPOSE

System	Abbreviation	Purpose
Positive crankcase ventilation	PCV	Reduces blow-by gas (HC)
Fuel evaporative emission control	EVAP	Reduces evaporative HC
Dash pot	DP	Reduces HC and CO
Exhaust gas recirculation	EGR	Reduces NOx
Three-way catalyst	TWC	Reduces HC, CO and NOx
Electronic fuel injection *	EFI	Regulates all engine conditions for reduction of exhaust emissions.

* For inspection and repair of the EFI system, refer to EFI Section.

COMPONENT LAYOUT AND SCHEMATIC DRAWING (7M-GE)

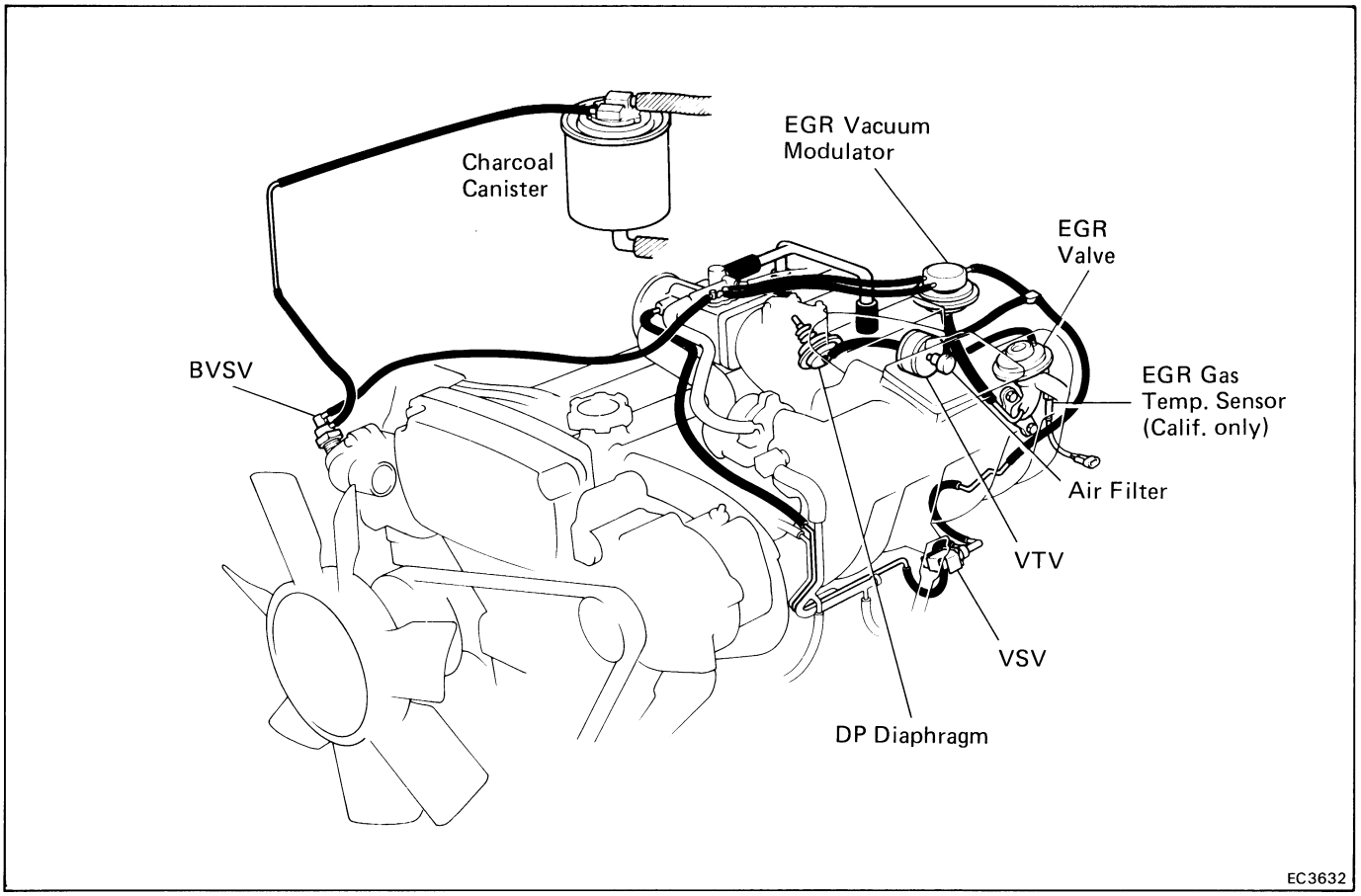

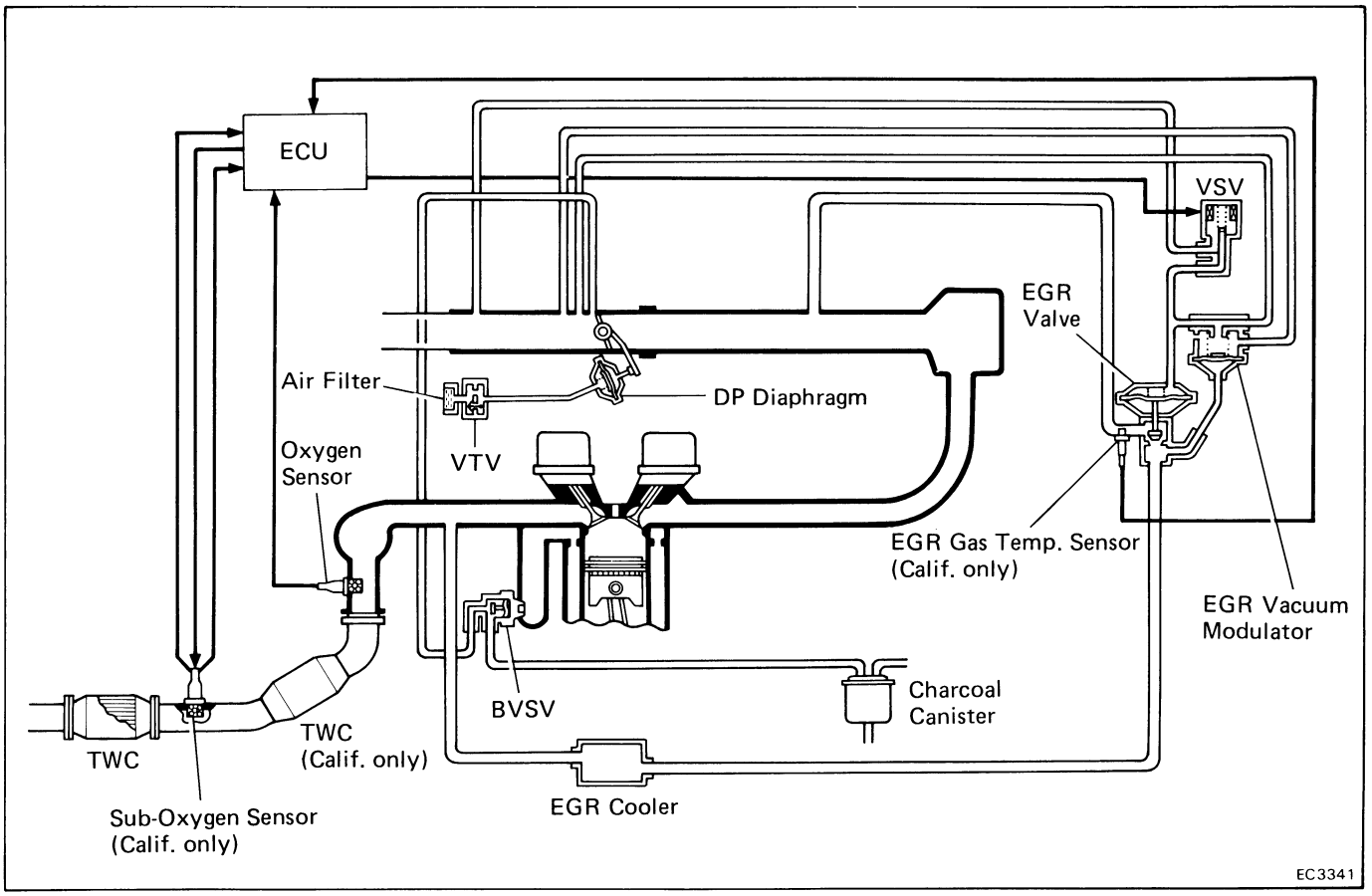

COMPONENT LAYOUT AND SCHEMATIC DRAWING (7M-GTE)

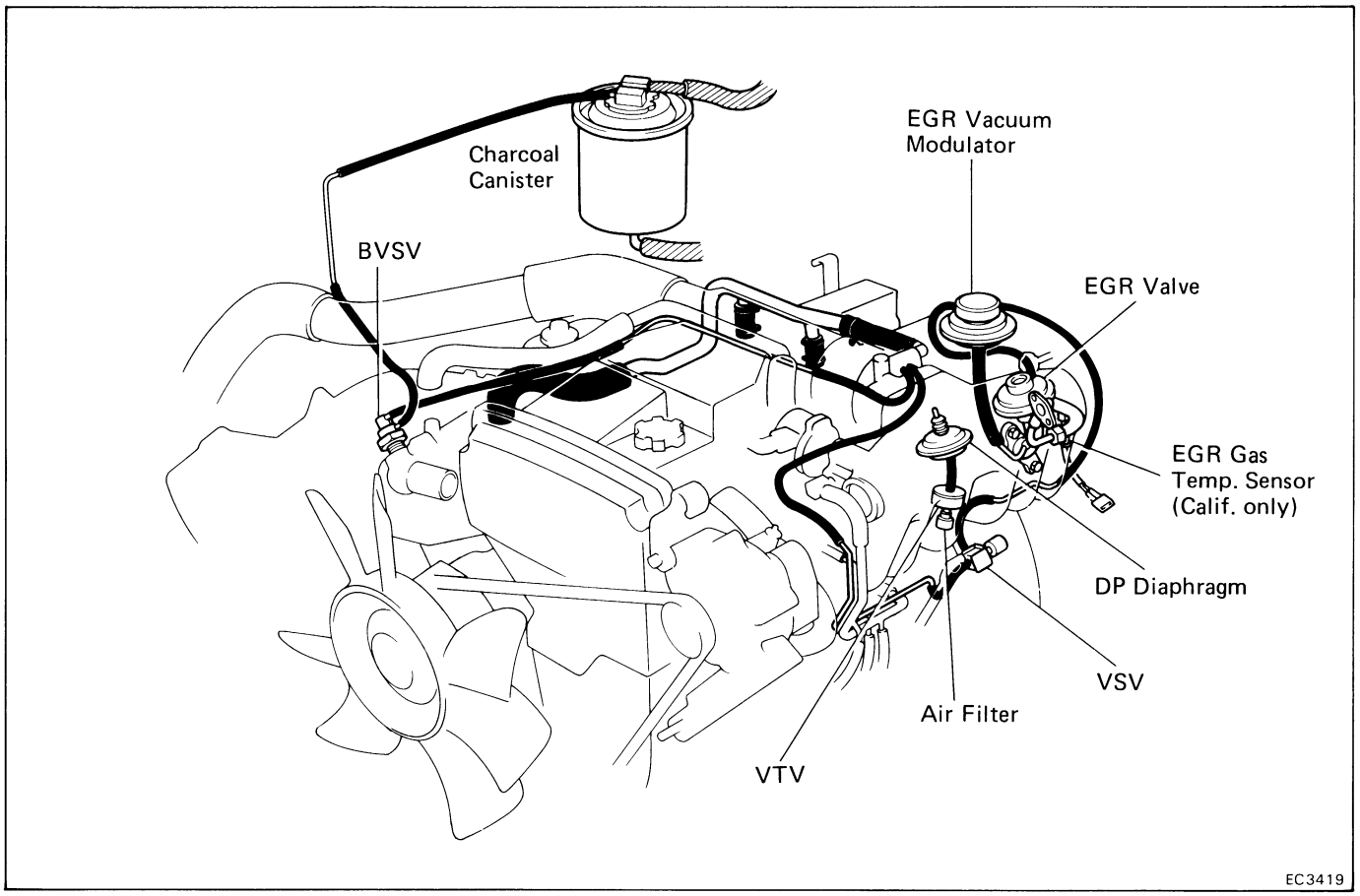

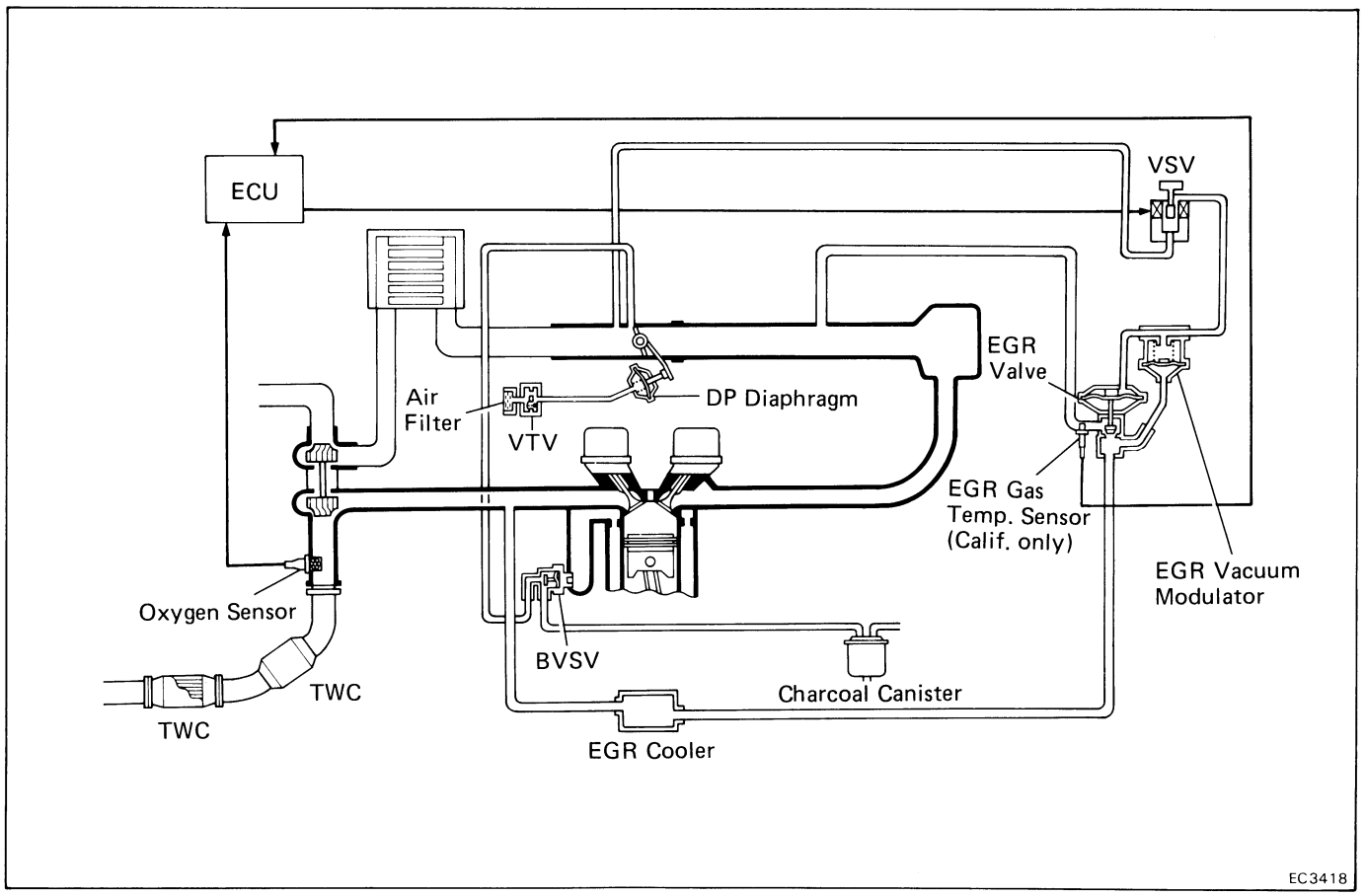

POSITIVE CRANKCASE VENTILATION (PCV) SYSTEM

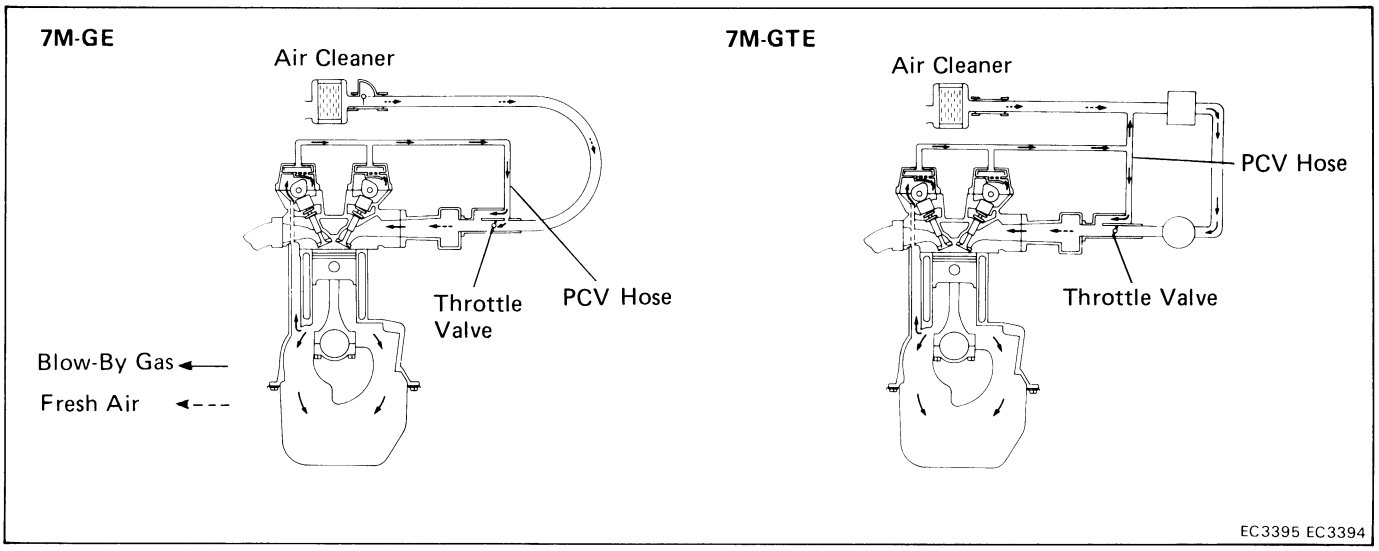

To reduce HC emissions, crankcase blow-by gas (HC) is routed to the intake manifold for combustion in the cylinders.

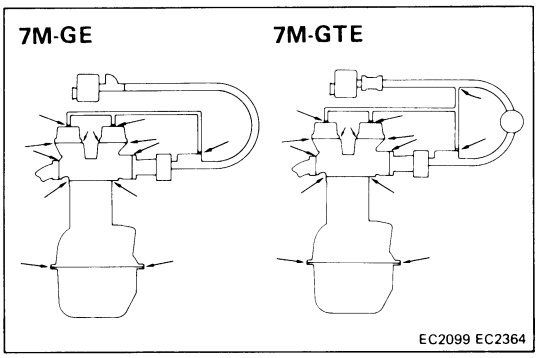

INSPECTION OF PCV HOSE AND CONNECTIONS

1. **VISUALLY INSPECT HOSE AND CONNECTIONS**

   Check for cracks, leaks or damage.

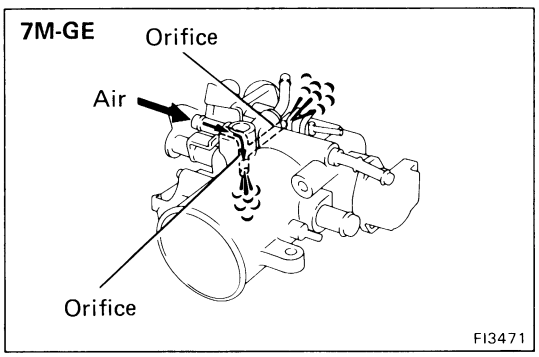

2. **CLEAN ORIFICE(S)**

   Clean off any gum deposits in the orifice(s) with solvent and blow out with compressed air.

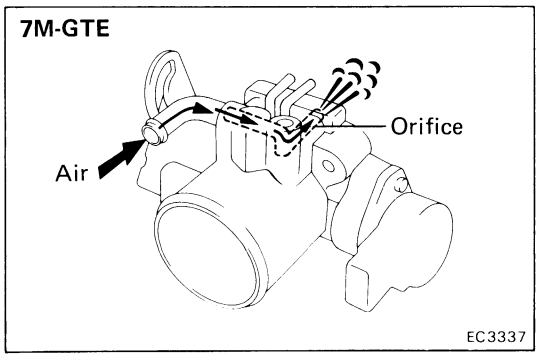

FUEL EVAPORATIVE EMISSION CONTROL (EVAP) SYSTEM

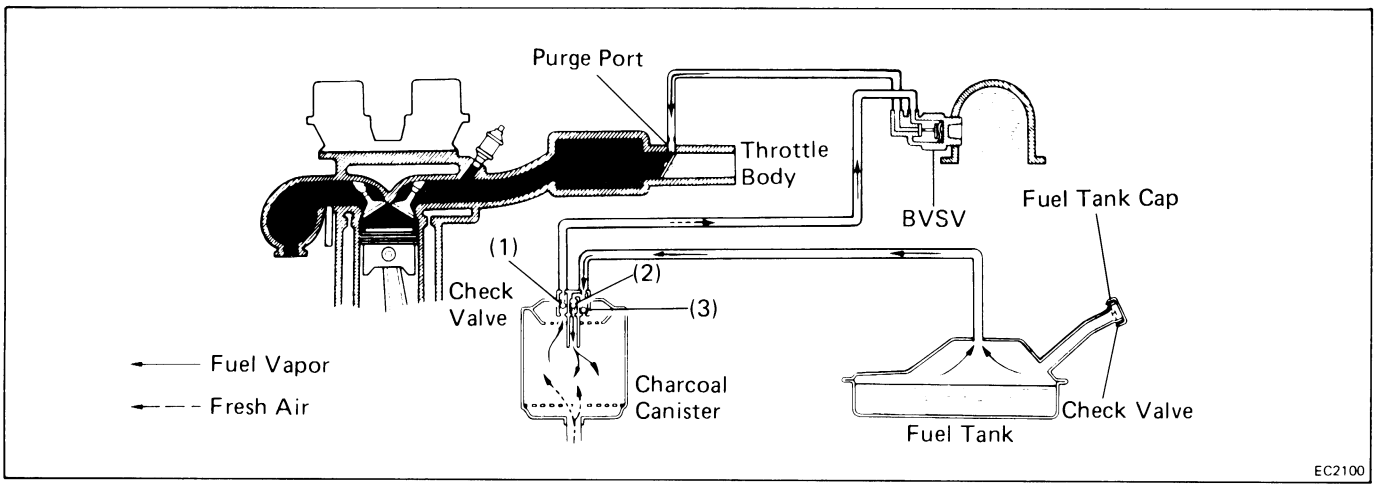

To reduce HC emissions, evaporated fuel from the fuel tank is routed through the charcoal canister to the intake manifold for combustion in the cylinders.

Coolant Temp.	BVSV	Throttle Valve Opening	Canister Check Valve			Check Valve in Cap	Evaporated Fuel (HC)
			(1)	(2)	(3)		
Below 35°C (95°F)	CLOSED	—	—	—	—	—	HC from tank is absorbed into the canister.
Above 54°C (129°F)	OPEN	Positioned below purge port	CLOSED	—	—	—	
		Positioned above purge port	OPEN	—	—	—	HC from canister is led into air intake chamber.
High pressure in tank	—	—	—	OPEN	CLOSED	CLOSED	HC from tank is absorbed into the canister.
High vacuum in tank	—	—	—	CLOSED	OPEN	OPEN	Air is led into the fuel tank.

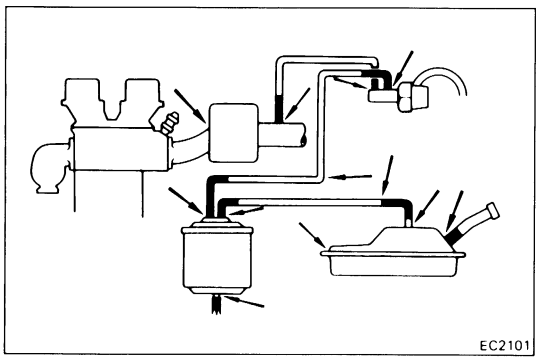

INSPECTION OF FUEL VAPOR LINES, FUEL TANK AND TANK CAP

1. **VISUALLY INSPECT LINES AND CONNECTIONS**
   Look for loose connections, kinks or damage.

2. **VISUALLY INSPECT FUEL TANK**
   Look for deformation, cracks or fuel leakage.

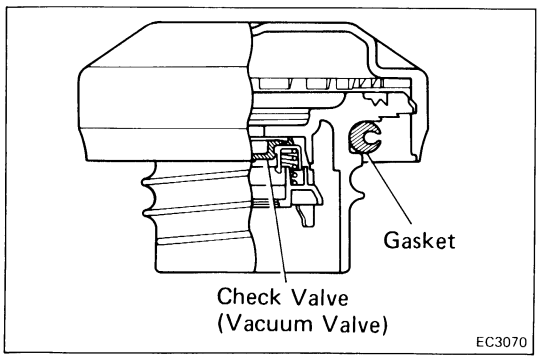

3. **VISUALLY INSPECT FUEL TANK CAP**
   Check if the cap and/or gasket are deformed or damaged.
   If necessary, repair or replace the cap.

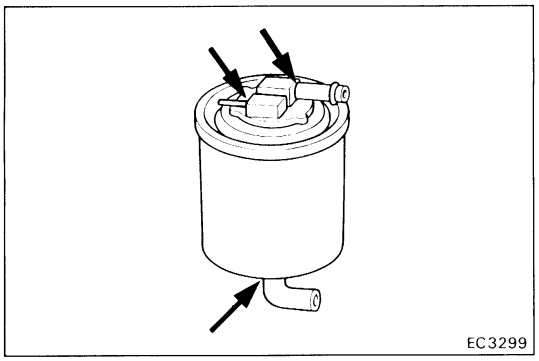

INSPECTION OF CHARCOAL CANISTER

1. **REMOVE CHARCOAL CANISTER**

2. **VISUALLY INSPECT CHARCOAL CANISTER CASE**

   Look for cracks or damage.

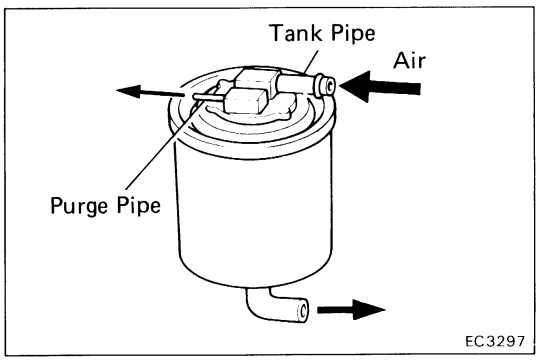

3. **CHECK FOR CLOGGED FILTER AND STUCK CHECK VALVE**

   (a) Using low pressure compressed air, blow into the tank pipe and check that air flows without resistance from the other pipes.

   (b) Blow into the purge pipe and check that air does not flow from the other pipes.

   If a problem is found, replace the charcoal canister.

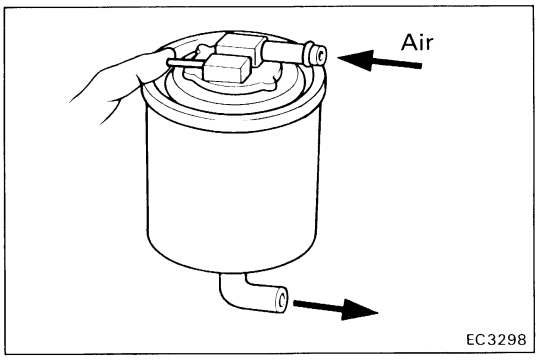

4. **CLEAN FILTER IN CANISTER**

   Clean the filter by blowing 3 kg/cm^2(43 psi, 294 kPa)of compressed air into the tank pipe while holding the other upper canister pipe closed.

   HINT:
   - Do not attempt to wash the canister.
   - No activated carbon should come out.

5. **INSTALL CHARCOAL CANISTER**

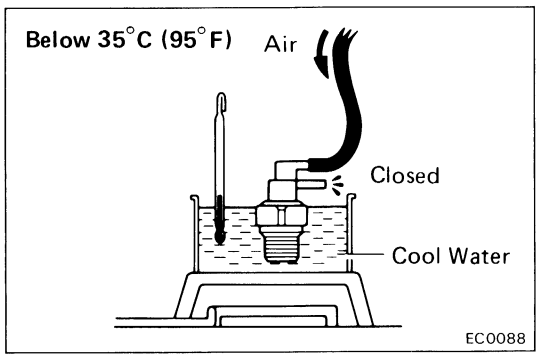

INSPECTION OF BVSV

CHECK BVSV BY BLOWING AIR INTO PIPE

(a) Drain the coolant from the radiator into a suitable container.

(b) Remove the BVSV.

(c) Cool the BVSV to below 35°C (95°F) with cool water.

(d) Blow air into a pipe and check that the BVSV is closed.

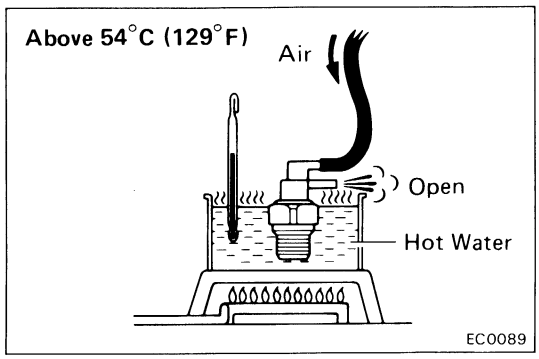

(e) Heat the BVSV to above 54°C (129°F) with hot water.

(f) Blow air into a pipe and check that the BVSV is open.

If a problem is found, replace the BVSV.

(g) Apply sealant to the threads of the BVSV and reinstall.

Sealant: Part No.08833-00070, THREE BOND 1324 or equivalent

(h) Fill the radiator with coolant.

DASH POT (DP) SYSTEM

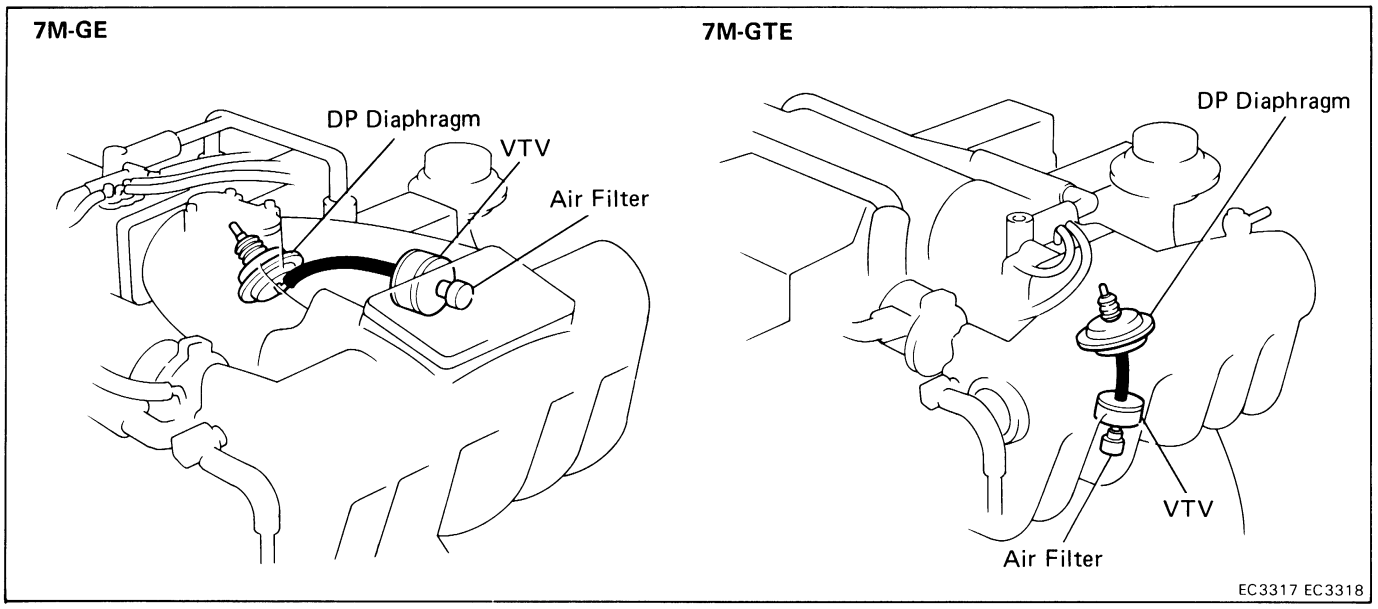

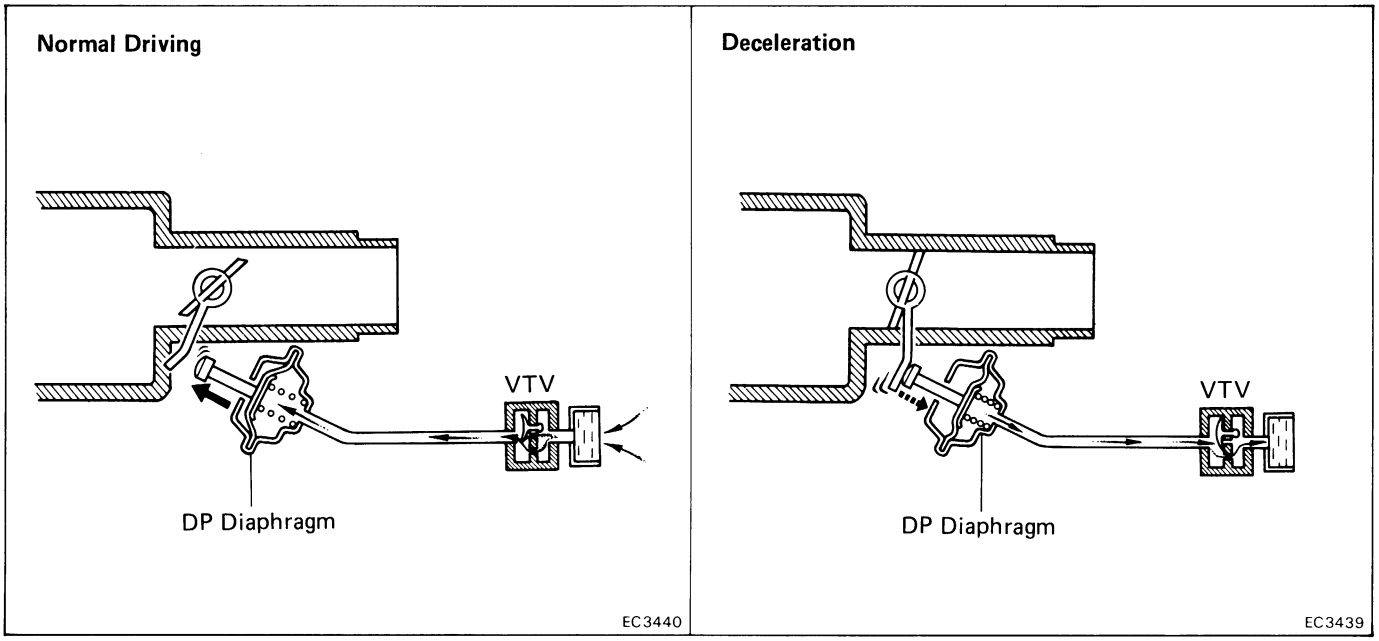

To reduce HC and Co emissions, when decelerating the dash pot opens the throttle valve slightly more than at idle. This causes the air-fuel mixture to burn completely.

Condition	Diaphragm	VTV	Throttle Valve
Idling	Pushed in by return force of throttle valve	CLOSED	Idle speed position
Normal driving	Pushed out by diaphragm spring	OPEN	High speed position
Deceleration	Pushed in by return force of throttle valve	CLOSED	Slightly opens and then slowly closes to idle position

INSPECTION OF DP SYSTEM

1. WARM UP ENGINE

2. CHECK IDLING SPEED

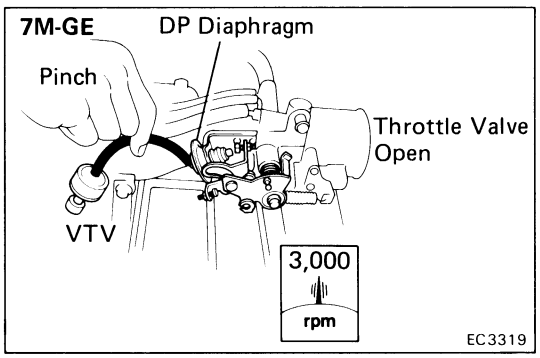

3. CHECK DP SETTING SPEED

(a) Maintain the engine speed at 3,000 rpm.

(b) Pinch the vacuum hose between the DP and VTV.

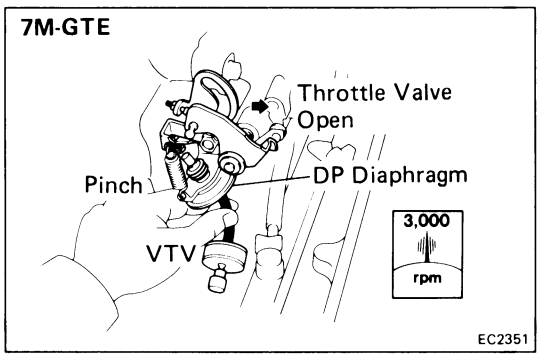

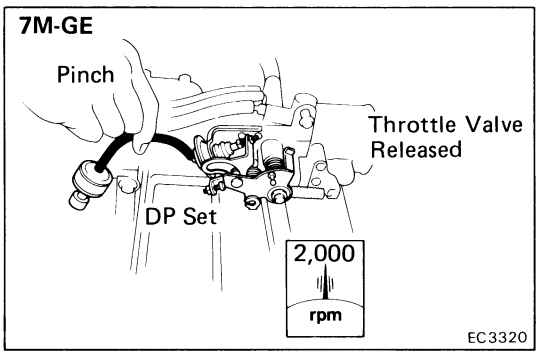

(c) Release the throttle valve.

(d) Check that the DP is set.

DP setting speed: 2,000 rpm

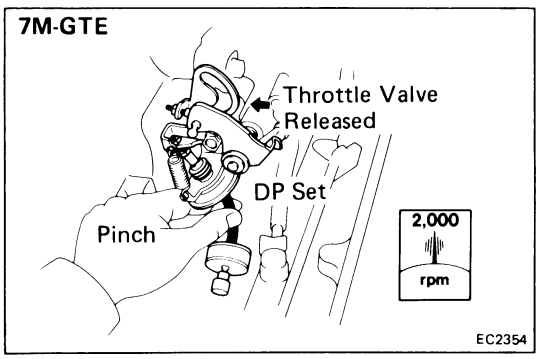

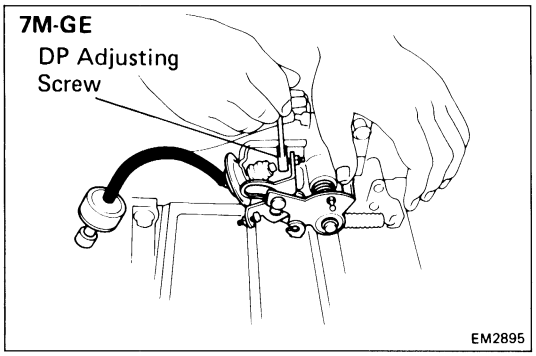

If not at the specified speed, adjust with the DP adjusting screw.

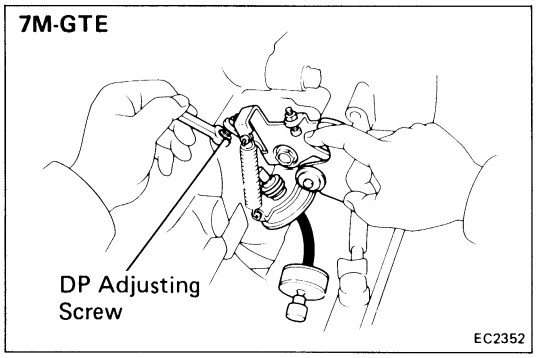

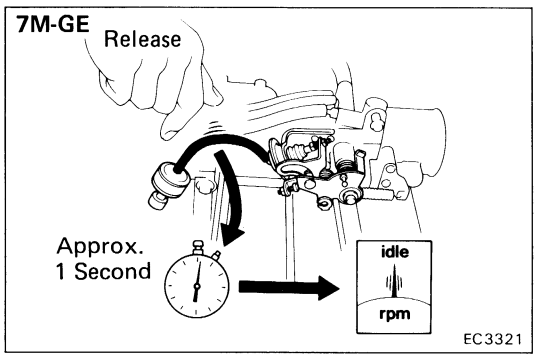

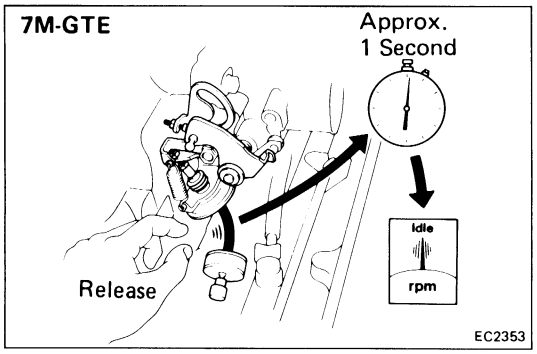

4. CHECK OPERATION OF VTV

(a) Set the DP speed in the same procedure as above; (a) to (c).

(b) Release the pinched hose and check that the engine returns to idle speed in approx. 1 second.

IF NO PROBLEM IS FOUND WITH THIS INSPECTION, THE SYSTEM IS OKAY; OTHERWISE INSPECT EACH PART

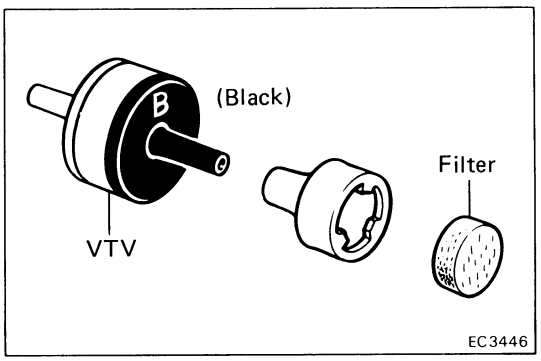

INSPECTION OF VTV

1. CHECK AND CLEAN FILTER ON VTV

(a) Check the filter for contamination or damage.

(b) Using compressed air, clean the filter.

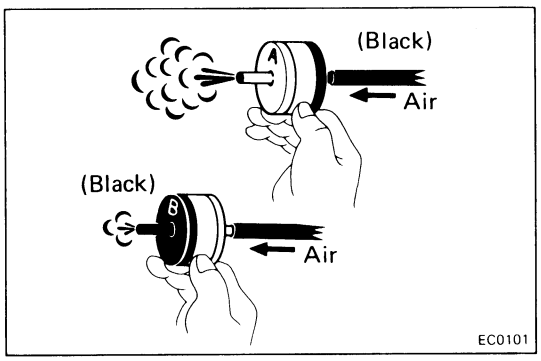

2. CHECK VTV BY BLOWING AIR INTO EACH SIDE

(a) Check that air flows without resistance from B to A.

(b) Check that air flows with difficulty from A to B.

EXHAUST GAS RECIRCULATION (EGR) SYSTEM (7M-GE)

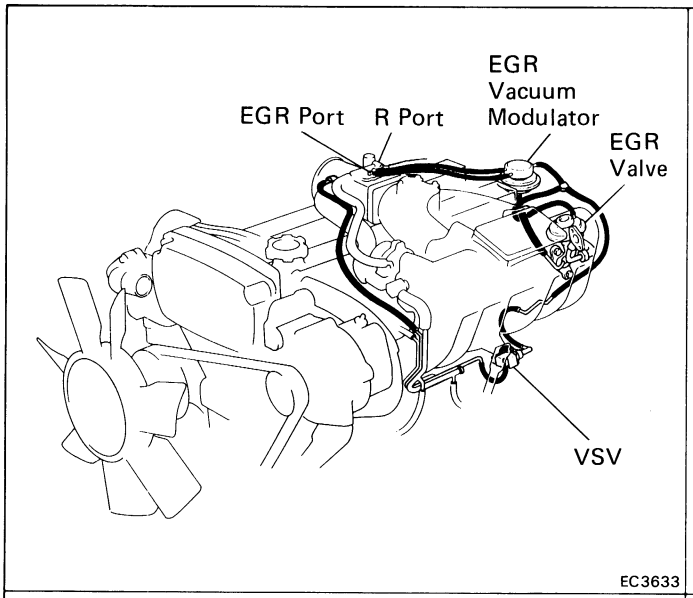

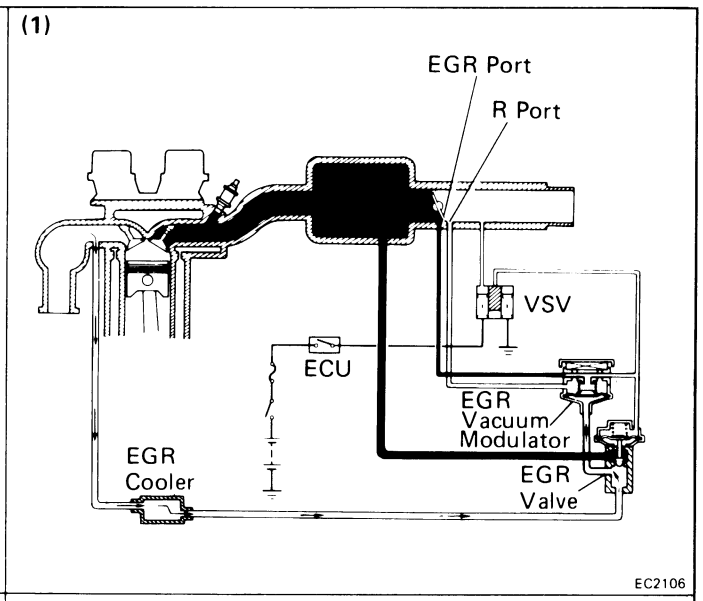

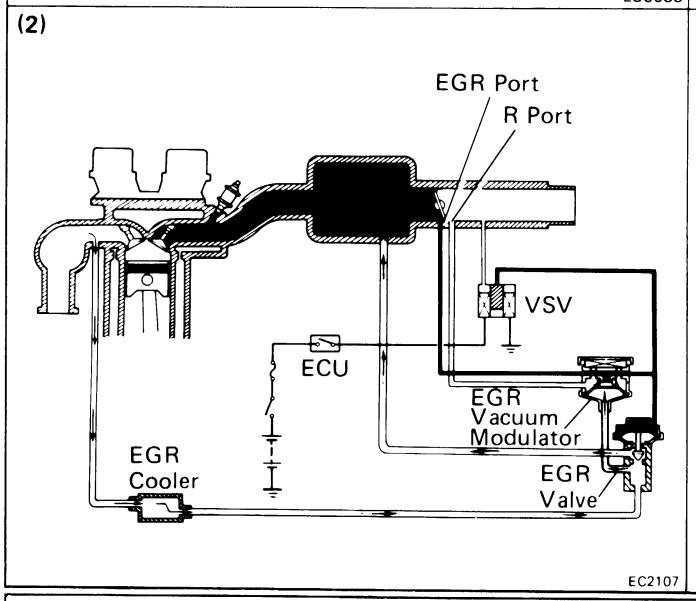

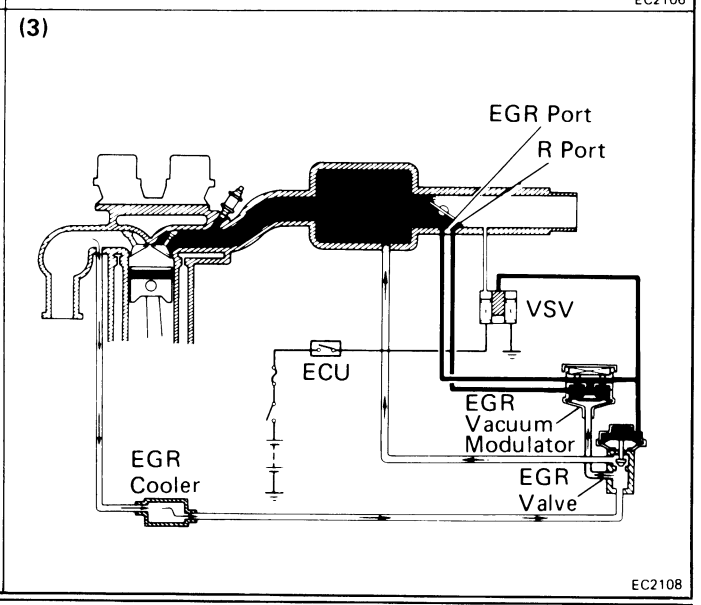

To reduce NOx emissions, part of the exhaust gases are recirculated through the EGR valve to the intake manifold to lower the maximum combustion temperature.

Coolant Temp.	*Engine RPM	VSV	Throttle Valve Opening Angle	Pressure in the EGR Valve Pressure Chamber		EGR Vacuum Modulator	EGR Valve	Exhaust Gas
Below 57°C (135°F)	–	OPEN	–	–		–	CLOSED	Not recirculated
Above 63°C (145°F)	Above 5,200 rpm	OPEN	–	–		–	CLOSED	Not recirculated
	Below 4,800 rpm	CLOSED	Positioned below EGR port	–		–	CLOSED	Not recirculated
			Positioned between EGR port and R port	(1) LOW	** Pressure constantly alternating between low and high	OPENS passage to atmosphere	CLOSED	Not recirculated
				(2) HIGH		CLOSES passage to atmosphere	OPEN	Recirculated
			Positioned above R port	(3) HIGH	***	CLOSES passage to atmosphere	OPEN	Recirculated (increase)

* Engine RPM control is for Calif. only.

** Pressure increase → Modulator closes → EGR valve opens → Pressure drops
→ EGR valve close ← Modulator opens ←

*** When the throttle valve is positioned above the R port, the EGR vacuum modulator will close the atmosphere passage and open the EGR valve to increase the EGR gas, even if the exhaust pressure is insufficiently low.

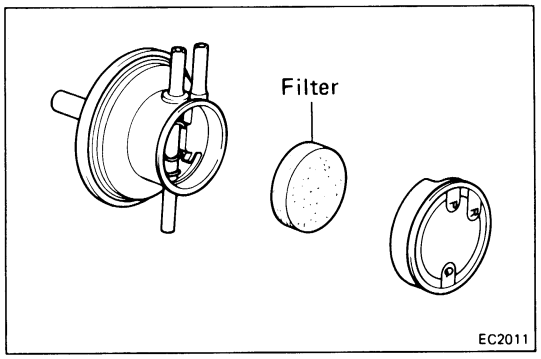

INSPECTION OF EGR SYSTEM

1. CHECK AND CLEAN FILTER IN EGR VACUUM MODULATOR

(a) Check the filter for contamination or damage.

(b) Using compressed air, clean the filter.

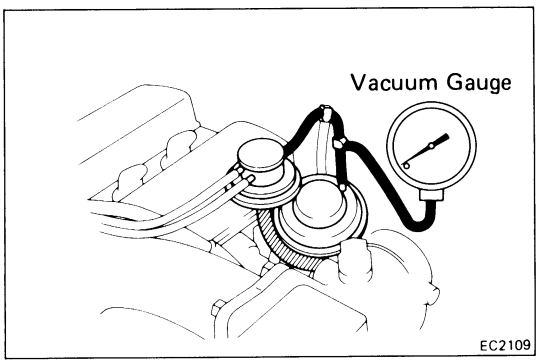

2. PREPARATION

Using a 3-way connector, connect a vacuum gauge to the hose between the EGR valve and EGR vacuum modulator.

3. CHECK SEATING OF EGR VALVE

Start the engine and check that the engine starts and runs at idle.

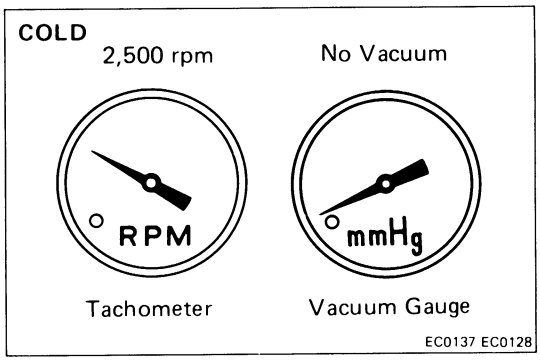

4. CHECK VSV WITH COLD ENGINE

(a) The coolant temperature should be below 57°C (135°F).

(b) Check that the vacuum gauge indicates is zero at 2,500 rpm.

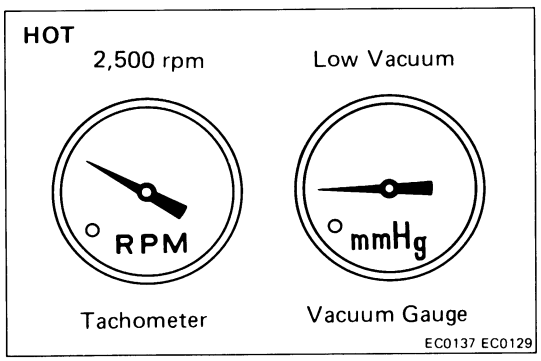

5. CHECK VSV AND EGR VACUUM MODULATOR WITH WARM ENGINE

(a) Warm up the engine.

(b) Check that the vacuum gauge indication is approx. 70 mmHg (2.76 in.Hg, 9.3 kPa) at 2,500 rpm.

(c) Check that the vacuum gauge indication is zero at idle.

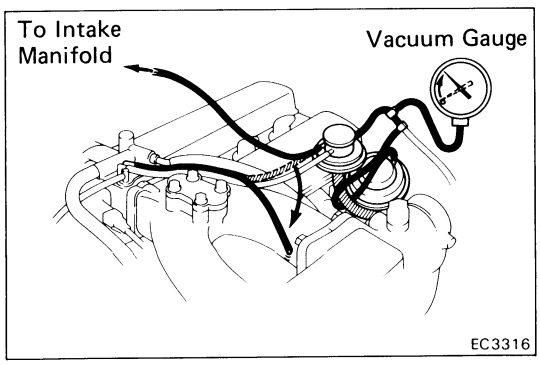

(d) Disconnect the vacuum hose from R port of the EGR vacuum modulator and connect R port directly to the intake manifold with another hose.

(e) Check that the vacuum gauge indicates high vacuum at 2,500 rpm.

HINT: As a large amount of EGR gas enters, the engine will misfire slightly.

(f) Disconnect the vacuum gauge and reconnect the vacuum hoses to the proper locations.

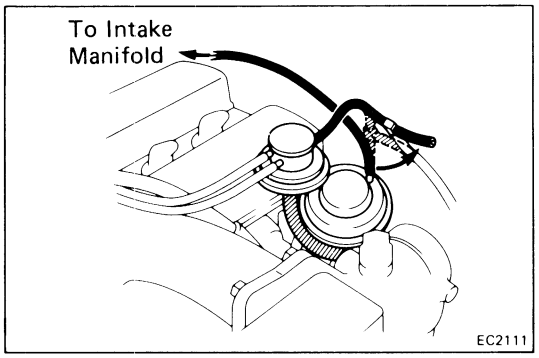

6. CHECK EGR VALVE

(a) Apply vacuum directly to the EGR valve with the engine idling.

(b) Check that the engine runs rough or dies.

(c) Reconnect the vacuum hoses to the proper location.

IF NO PROBLEM IS FOUND WITH THIS INSPECTION, THE SYSTEM IS OKAY; OTHERWISE INSPECT EACH PART

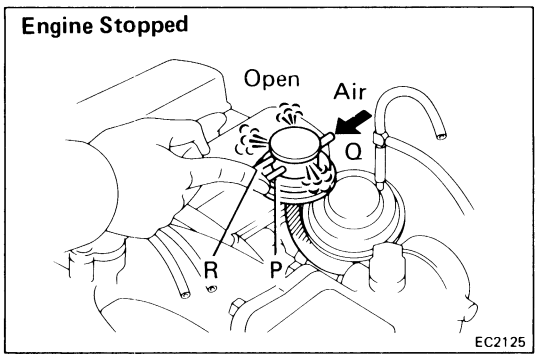

INSPECTION OF EGR VACUUM MODULATOR

CHECK EGR VACUUM MODULATOR OPERATION

(a) Disconnect the vacuum hoses from ports P, Q and R of the EGR vacuum modulator.

(b) Block ports P and R with your finger.

(c) Blow air into port Q. Check that the air passes through to the air filter freely.

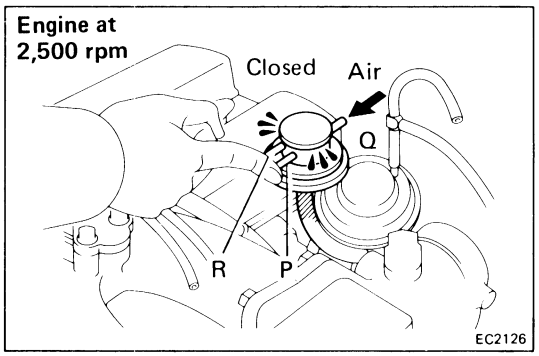

(d) Start the engine and maintain speed at 2,500 rpm.

(e) Repeat the above test. Check that there is a strong resistance to air flow.

If a problem is found, replace the EGR vacuum modulator.

(f) Reconnect the vacuum hoses to the proper locations.

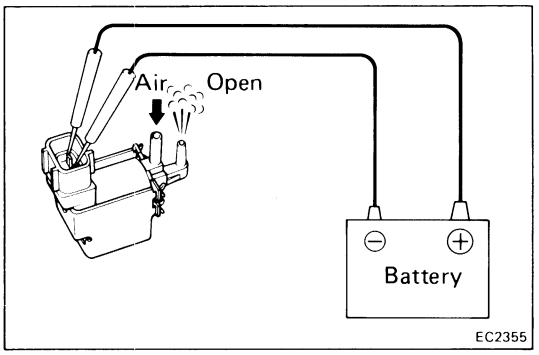

INSPECTION OF VSV

1. CHECK VACUUM CIRCUIT CONTINUITY IN VSV BY BLOWING AIR INTO PIPE

(a) Connect the VSV terminals to the battery terminals as illustrated.

(b) Blow air into a pipe and check that the VSV is open.

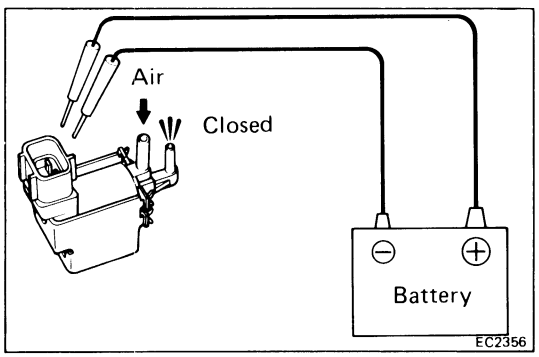

(c) Disconnect the battery.

(d) Blow air into a pipe and check that the VSV is closed.

If a problem is found, replace the VSV.

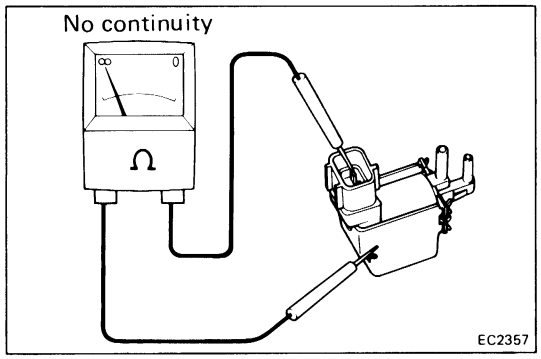

2. **CHECK FOR SHORT CIRCUIT**

Using an ohmmeter, check that there is no continuity between the terminals and the VSV body.

If there is continuity, replace the VSV.

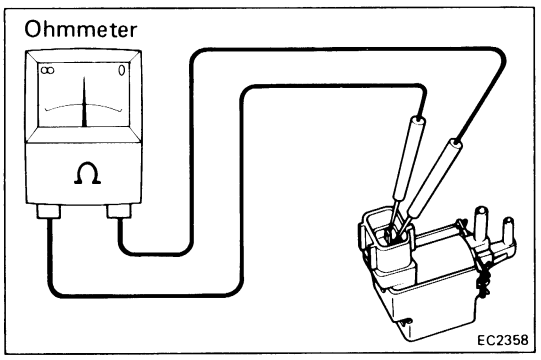

3. **CHECK FOR OPEN CIRCUIT**

Using an ohmmeter, measure the resistance between the terminals.

Specified resistance: 38 — 44 Ω at 20°C (68°F)

If the resistance is not within specification, replace the VSV.

INSPECTION OF EGR VALVE

1. **REMOVE EGR VALVE**

Check the valve for sticking and heavy carbon deposits.

If a problem is found, replace it.

2. **INSTALL EGR VALVE WITH NEW GASKET**

INSPECTION OF WATER TEMP. SENSOR

(See page FI-113)

EXHAUST GAS RECIRCULATION (EGR) SYSTEM (7M-GTE)

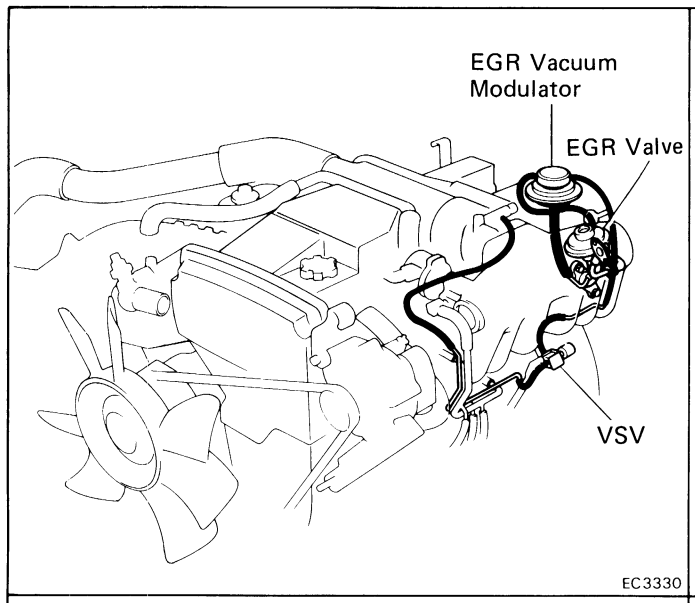

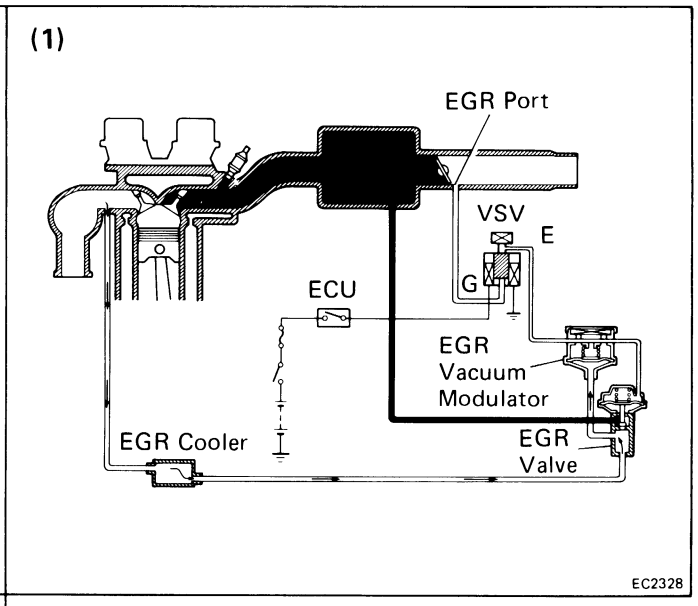

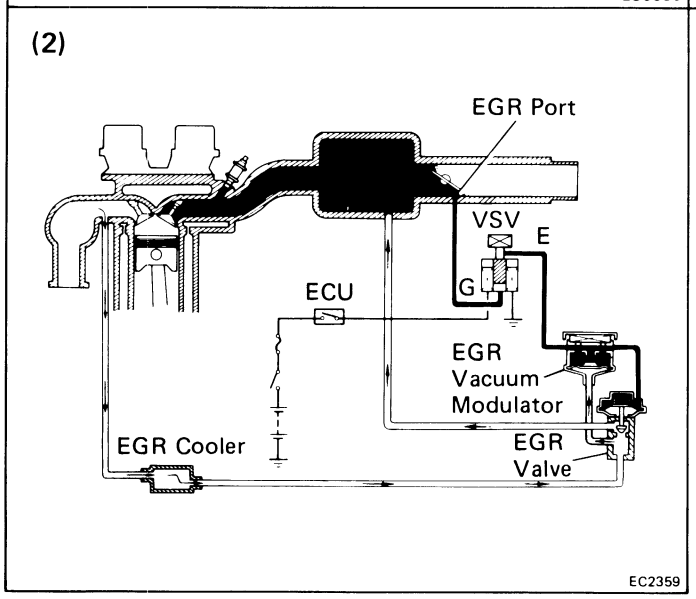

To reduce NOx emissions, part of the exhaust gases are recirculated through the EGR valve to the intake manifold to lower the maximum combustion temperature.

Coolant Temp.	VSV	Throttle Valve Opening Angle	Pressure in the EGR Valve Pressure Chamber		EGR Vacuum Modulator	EGR Valve	Exhaust Gas
Below 57°C (135°F)	CLOSED (E–G)	–	–		–	CLOSED	Not recirculated
Above 63°C (145°F)	OPEN (E–G)	Positioned below EGR port	(1)	–	–	CLOSED	Not recirculated
		Positioned above EGR port	(2)	*	CLOSES passage to atmosphere	OPEN	Recirculated (increase)

* When the throttle valve is positioned above the EGR port, the EGR vacuum modulator will close the atmosphere passage and open the EGR valve to increase the EGR gas, even if the exhaust pressure is insufficiently low.

INSPECTION OF EGR SYSTEM

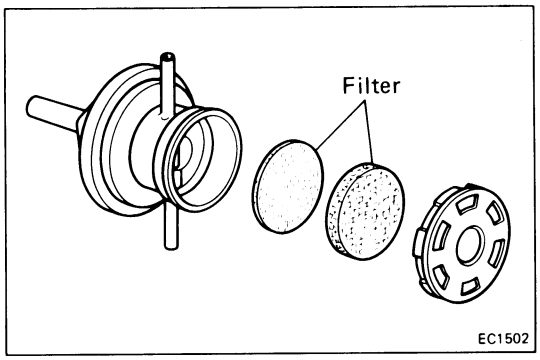

1. CHECK AND CLEAN FILTERS IN EGR VACUUM MODULATOR

(a) Check the filter for contamination or damage.

(b) Using compressed air, clean the filter.

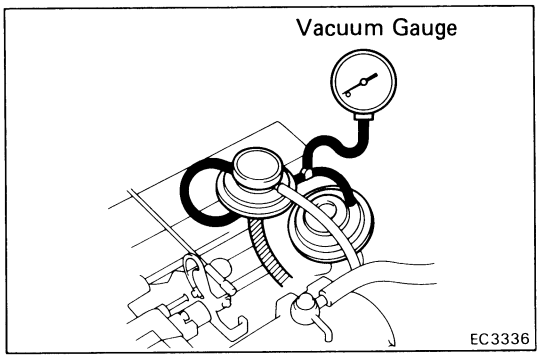

2. PREPARATION

Using a 3-way connector, connect a vacuum gauge to the hose between the EGR valve and EGR vacuum modulator.

3. CHECK SEATING OF EGR VALVE

Start the engine and check that the engine starts and runs at idle.

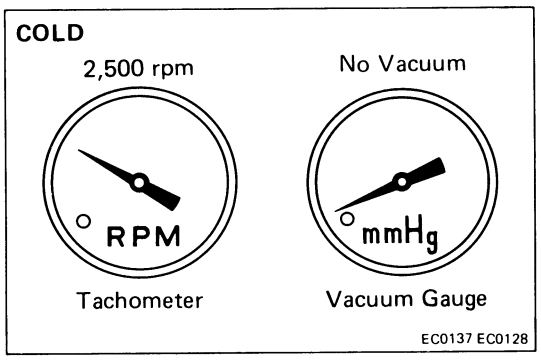

4. CHECK VSV WITH COLD ENGINE

(a) The coolant temperature should be below 57°C (135°F).

(b) Check that the vacuum gauge indication is zero at 2,500 rpm.

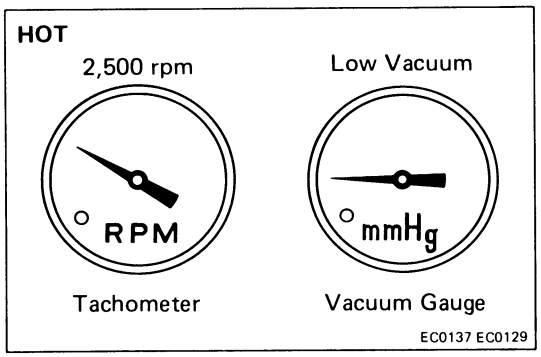

5. CHECK VSV AND EGR VACUUM MODULATOR WITH HOT ENGINE

(a) Warm up the engine.

(b) Check that the vacuum gauge indication is approx. 70 mmHg (2.76 in.Hg, 9.3 kPa) at 2,500 rpm.

(c) Disconnect the vacuum gauge and reconnect the vacuum hose to the proper location.

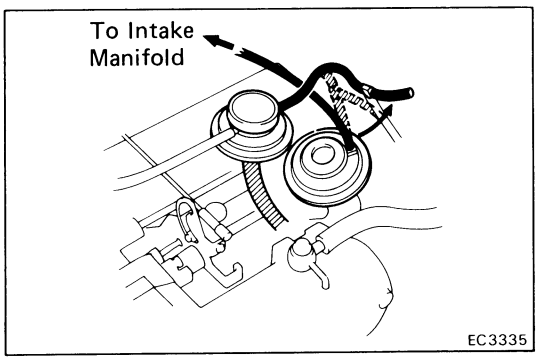

6. CHECK EGR VALVE

(a) Apply vacuum directly to the EGR valve with the engine idling.

(b) Check that the engine runs rough or dies.

(c) Reconnect the vacuum hoses to the proper location.

IF NO PROBLEM IS FOUND WITH THIS INSPECTION, THE SYSTEM IS OKAY; OTHERWISE INSPECT EACH PART

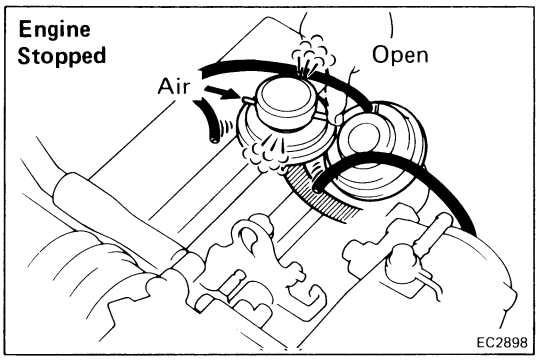

INSPECTION OF EGR VACUUM MODULATOR

CHECK EGR VACUUM MODULATOR OPERATION

(a) Disconnect the vacuum hoses from the EGR vacuum modulator.

(b) Block port P with your finger.

(c) Blow air into the other pipe. Check that the air passes through to the air filter freely.

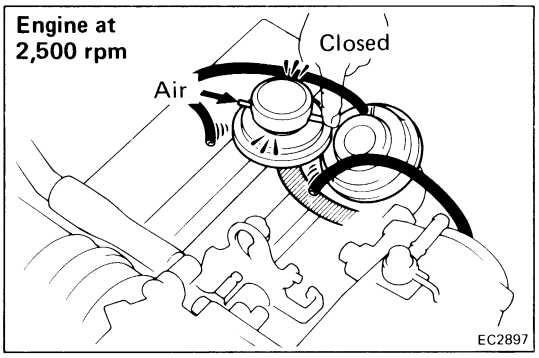

(d) Start the engine and maintain speed at 2,500 rpm.

(e) Repeat the above test. Check that there is a strong resistance to air flow.

If a problem is found, replace the EGR vacuum modulator.

(f) Reconnect the vacuum hoses to the proper locations.

INSPECTION OF VSV

1. CHECK VACUUM CIRCUIT CONTINUITY IN VSV BY BLOWING AIR INTO PIPE

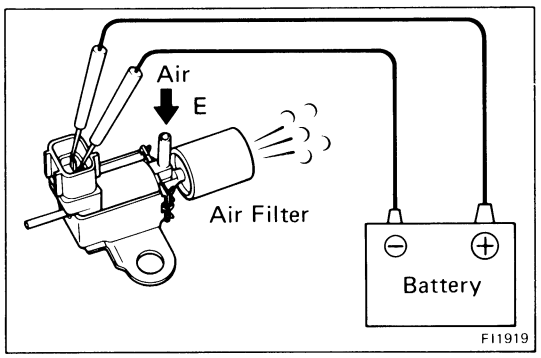

(a) Connect the VSV terminals to the battery terminals as illustrated.

(b) Blow into pipe E and check that air comes out of the air filter.

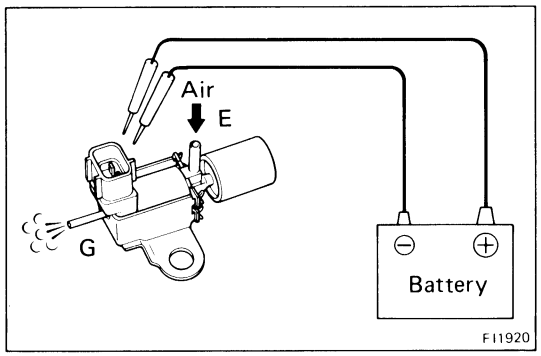

(c) Disconnect the battery.

(d) Blow into pipe E and check that air comes out of pipe G.

If a problem is found, replace the VSV.

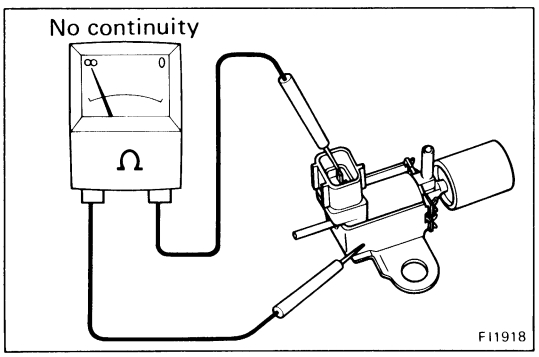

2. CHECK FOR SHORT CIRCUIT

Using an ohmmeter, check that there is no continuity between the terminals and the VSV body.

If there is continuity, replace the VSV.

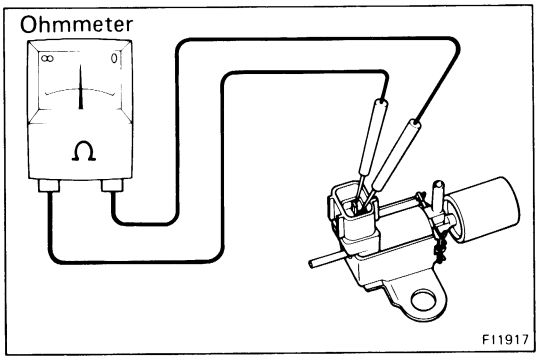

3. **CHECK FOR OPEN CIRCUIT**

Using an ohmmeter, measure the resistance between the terminals.

Specified resistance: 38 — 44 Ω at 20°C (68°F)

If the resistance is not within specification, replace the VSV.

INSPECTION OF EGR VALVE

1. **REMOVE EGR VALVE**

Check the valve for sticking and heavy carbon deposits. if a problem is found, replace it.

2. **INSTALL EGR VALVE WITH NEW GASKET**

INSPECTION OF WATER TEMP. SENSOR

(See page FI-113)

THREE-WAY CATALYST (TWC) SYSTEM

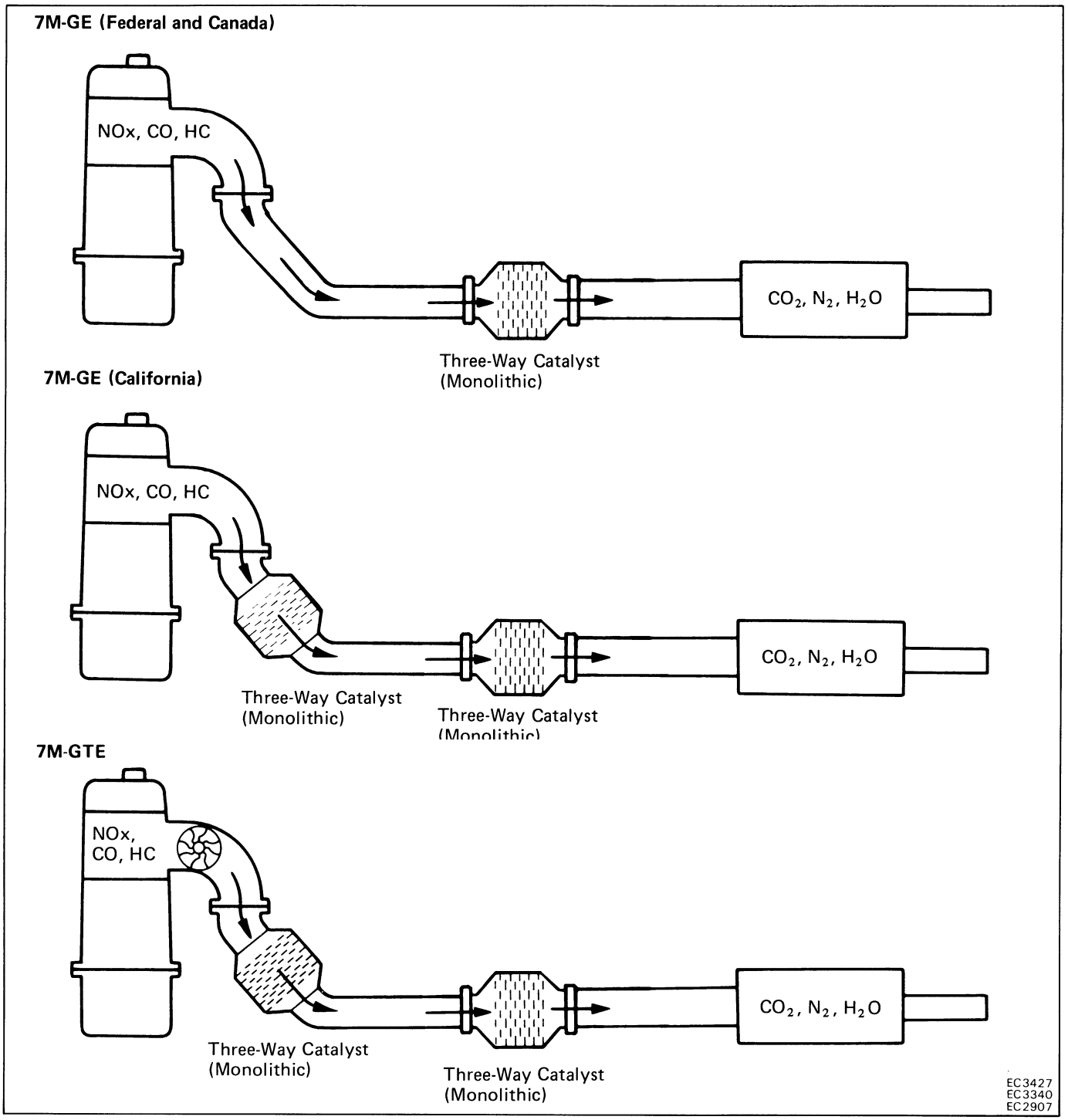

To reduce HC, CO and NOx emissions, they are oxidized, reduced and converted to nitrogen (N_2), carbon dioxide (CO_2) and water (H_2O) by the catalyst.

Exhaust Port		TWC		Exhaust Gas
HC, CO, AND NOx	→	OXIDATION AND REDUCTION	→	CO_2 H_2O N_2

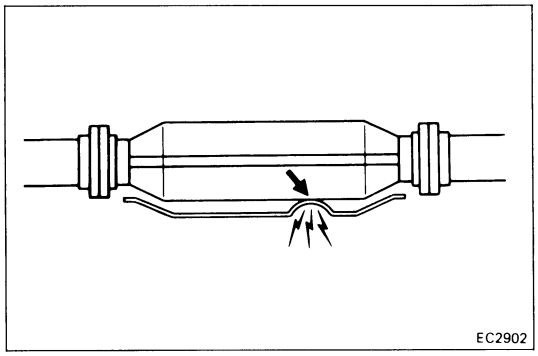

INSPECTION OF EXHAUST PIPE ASSEMBLY

1. **CHECK CONNECTIONS FOR LOOSENESS OR DAMAGE**
2. **CHECK CLAMPS FOR WEAKNESS, CRACKS OR DAMAGE**

INSPECTION OF CATALYTIC CONVERTER

CHECK FOR DENTS OR DAMAGE

If any part of the protector is damaged or dented to the extent that it touches the catalyst, repair or replace it.

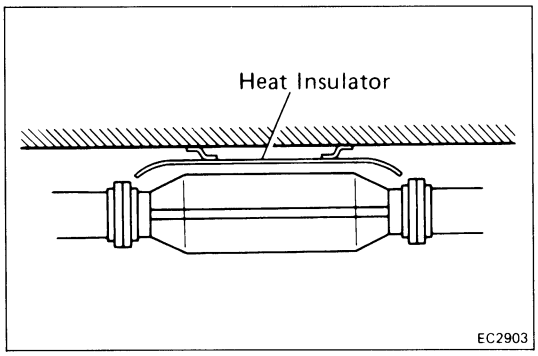

INSPECTION OF HEAT INSULATOR

1. **CHECK HEAT INSULATOR FOR DAMAGE**
2. **CHECK FOR ADEQUATE CLEARANCE BETWEEN CATALYTIC CONVERTER AND HEAT INSULATOR**

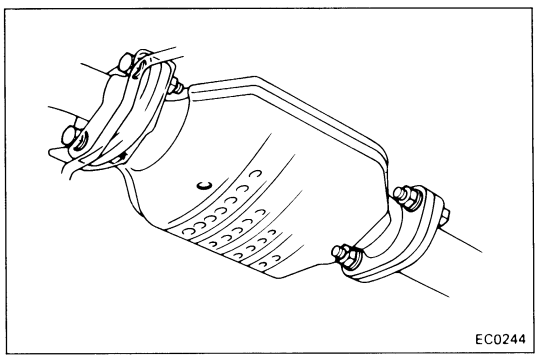

REPLACEMENT OF CATALYTIC CONVERTER

1. **REMOVE CONVERTER**
   (a) Jack up the vehicle.
   (b) Check that the converter is cool.
   (c) Remove the bolts at the front and rear of the converter.
   (d) Remove the converter and gaskets.

2. **INSTALL CONVERTER**
   (a) Place new gaskets on the converter front and rear pipes, and connect the converter to the exhaust pipes.
   (b) Tighten the bolts.

   Torque: Catalyst-Exhaust pipe
   440 kg-cm (32 ft-lb, 43 N·m)

EFI SYSTEM

	Page
SYSTEM DESCRIPTION	FI-2
PRECAUTIONS	FI-5
INSPECTION PRECAUTIONS	FI-5
TROUBLESHOOTING	FI-10
DIAGNOSIS SYSTEM	FI-23
TROUBLESHOOTING WITH VOLT/OHMMETER (7M-GE)	FI-30
TROUBLESHOOTING WITH VOLT/OHMMETER (7M-GTE)	FI-49
FUEL SYSTEM	FI-70
Fuel Pump	FI-70
Cold Start Injector	FI-77
Fuel Pressure Regulator	FI-81
Injectors	FI-83
Fuel Tank and Line	FI-92
AIR INDUCTION SYSTEM	FI-94
Air Flow Meter (7M-GE)	FI-94
Air Flow Meter (7M-GTE)	FI-96
Throttle Body	FI-100
Idle Speed Control (ISC) Valve	FI-106
ELECTRONIC CONTROL SYSTEM	FI-107
Location of Electronic Control Parts	FI-108
EFI Main Relay	FI-109
Circuit Opening Relay	FI-110
Solenoid Resistor (7M-GTE)	FI-111
Cold Start Injector Time Switch	FI-112
Water Temp. Sensor	FI-113
Fuel Pump Relay and Resistor	FI-114
Fuel Pressure Control System (7M-GTE)	FI-116
EGR Gas Temp. Sensor (California Vehicles only)	FI-118
Oxygen Sensor	FI-119
Sub-Oxygen Sensor [7M-GE (California Vehicles only)]	FI-121
Engine Electronic Controlled Unit (ECU)	FI-122
Fuel Cut RPM	FI-125

SYSTEM DESCRIPTION

7M-GE

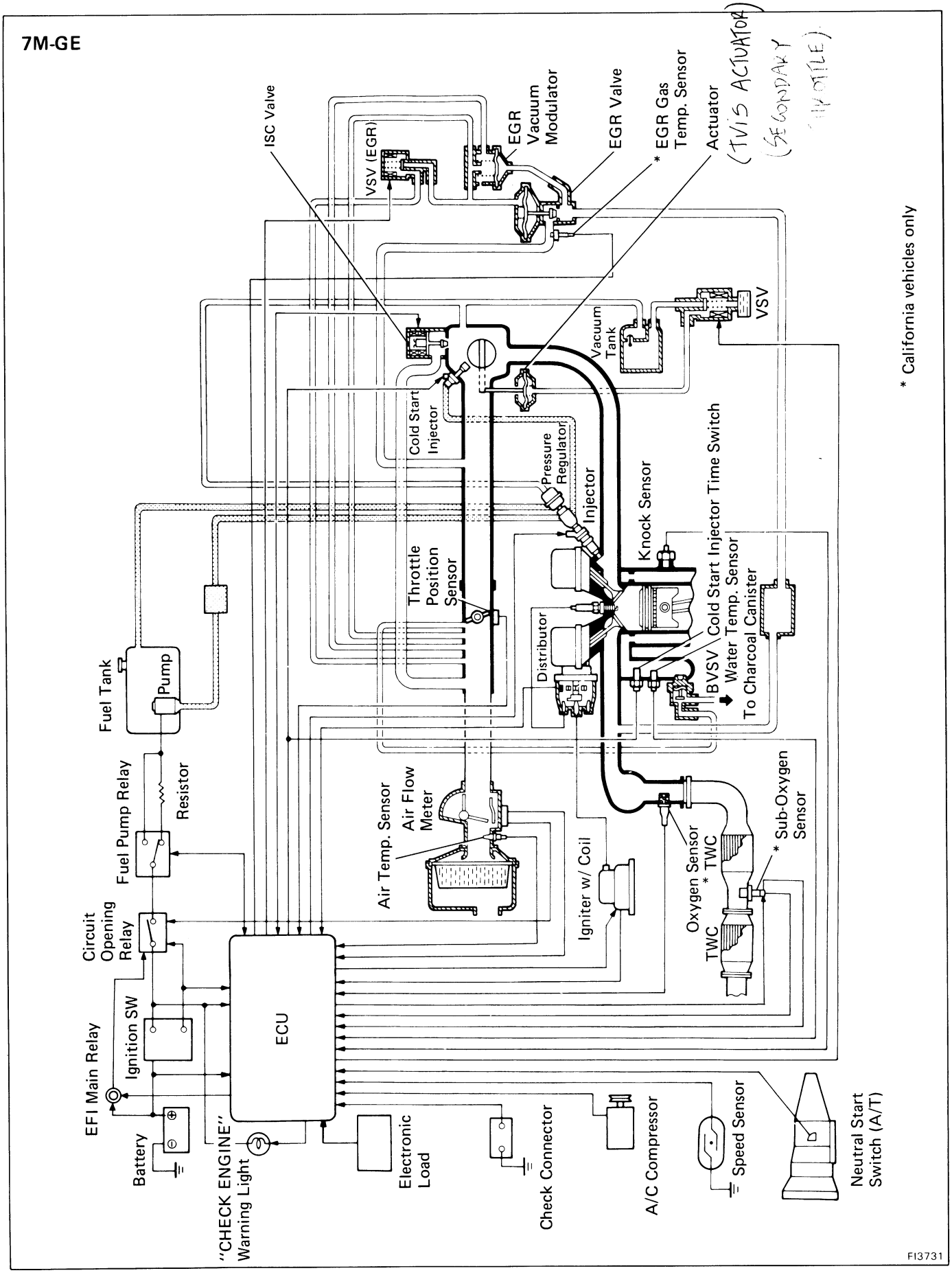

SYSTEM DESCRIPTION (Cont'd)

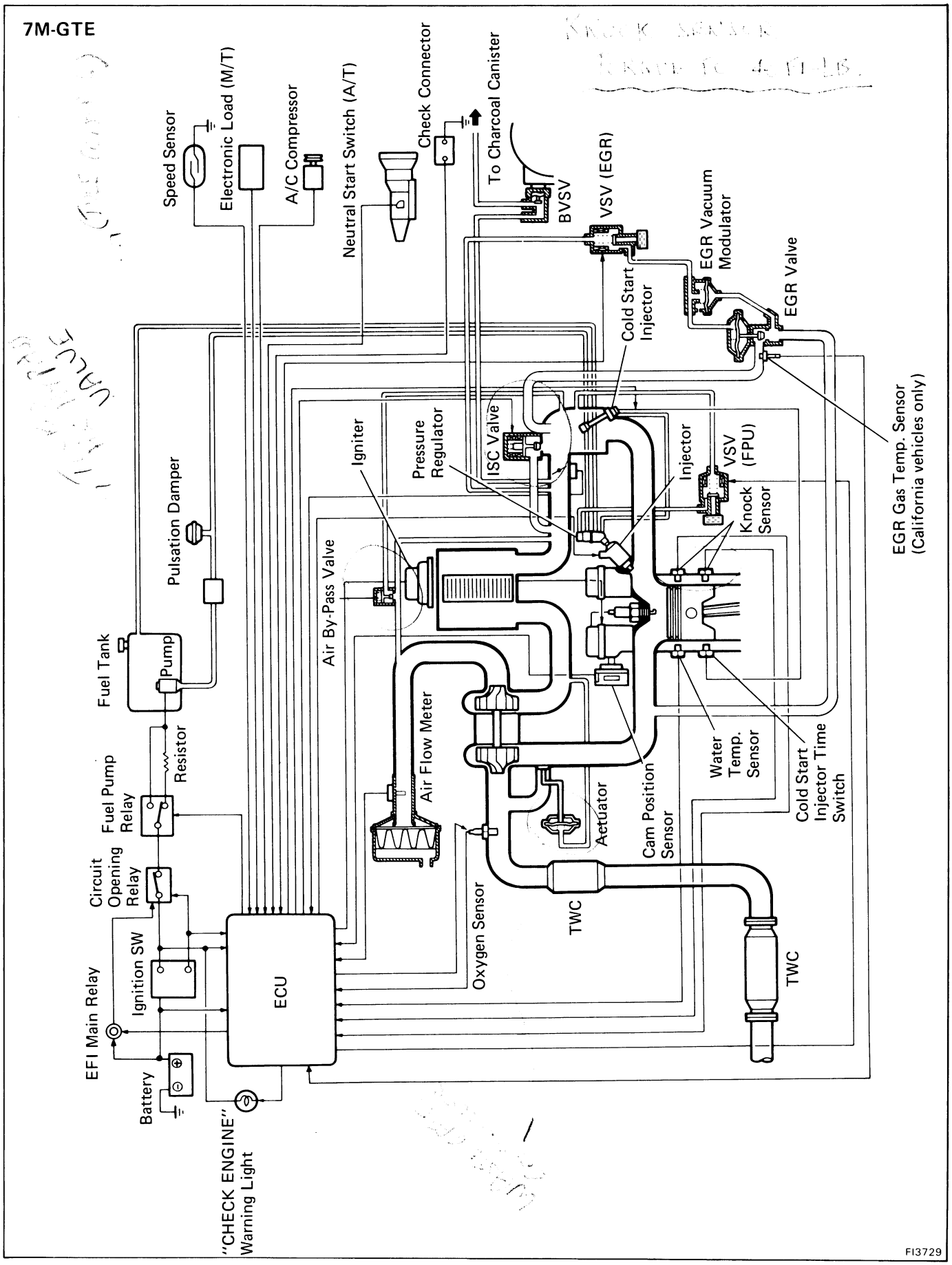

The EFI system is composed of 3 basic sub systems; Fuel, Air Induction and Electronic Control Systems.

FUEL SYSTEM

An electric fuel pump supplies sufficient fuel, under a constant pressure, to the injectors. These injectors inject a measured quantity of fuel into the intake parts in accordance with signals from the ECU (Electronic Control Unit).

AIR INDUCTION SYSTEM

The air induction system provides sufficient air for engine operation.

ELECTRONIC CONTROL SYSTEM

The 7M-GE and 7M-GTE engines are equipped with a Toyota Computer Control System (TCCS) which centrally controls the EFI, ESA, Diagnosis systems, etc. by means of an Electronic Control Unit (ECU — formerly EFI computer) employing a microcomputer.

By means of the ECU, the TCCS controls the following functions:

1. Electronic Fuel Injection (EFI)

   The ECU receives signals from various sensors indicating changing engine operating conditions such as:

   Exhaust oxygen content
   Intake air volume
   Intake air temperature
   Coolant temperature
   Engine rpm
   Acceleration/deceleration etc.

   These signals are utilized by the ECU to determine the injection duration necessary for an optimum air-fuel ratio.

2. Electronic Spark Advance (ESA)

   The ECU is programmed with data for optimum ignition timing under any and all operating conditions. Using data provided by sensors which monitor various engine functions (rpm, A/C signal, coolant temperature, etc.), the microcomputer (ECU) triggers the spark at precisely the right instant. (See IG section)

3. Idle Speed Control (ISC)

   The ECU is programmed with target engine speed values to respond to different engine conditions (coolant temperature, air conditioner on/off, etc.). Sensors transmit signals to the ECU which control the flow of air through the by-pass of the throttle valve and adjust idle speed to the target value.
   (See pages FI-44, 65, 106)

4. Diagnosis

   The ECU detects any malfunctions or abnormalties in the sensor network and lights the "CHECK ENGINE" warning light on the instrument panel. At the same time, the trouble is identified and a diagnostic code is recorded by the ECU.
   (See page FI-26)

5. Fail-Safe Function

   In the event of computer malfunction, a back-up circuit will take over to provide minimal drivability. Simultaneously, the "CHECK ENGINE" warning light will come on.

PRECAUTIONS

1. **Before working on the fuel system, disconnect the negative terminal from the battery.**

   HINT: Any diagnostic code retained by the computer will be erased when the battery terminal is removed.

   Therefore, if necessary, read the code before removing the battery terminal.

   CAUTION: Work must be started after approx. 20 seconds or longer from the time the ignition switch is turned to the "LOCK" position and the negative (−) terminal cable is disconnected from the battery.

2. **Do not smoke or work near an open flame when working on the fuel system.**
3. **Keep gasoline off rubber or leather parts.**

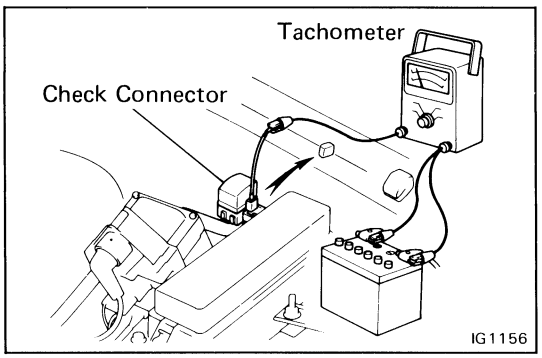

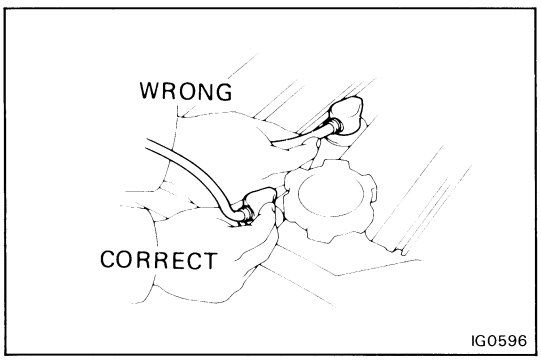

INSPECTION PRECAUTIONS

MAINTENANCE PRECAUTIONS

1. **INSURE CORRECT ENGINE TUNE-UP**

2. **PRECAUTIONS WHEN CONNECTING GAUGE**
   (a) Connect the tachometer test probe to the terminal IG ⊖ of check connector.
   (b) Use the battery as the power source for the timing light, tachometer, etc.

3. **IN EVENT OF ENGINE MISFIRE THE FOLLOWING PRECAUTIONS SHOULD BE TAKEN**
   (a) Insure proper connection of battery terminals, etc.
   (b) Handle high-tension cords carefully.
   (c) After repair work, insure that the ignition coil terminals and all other ignition system line are reconnected securely.
   (d) When cleaning the engine compartment, be especially careful to protect the electrical system from water.

4. **PRECAUTIONS WHEN HANDLING OXYGEN SENSOR(S)**
   (a) Do not allow oxygen sensor to drop or hit against an object.
   (b) Do not allow water to come into contact with the sensor or attempt to cool it.

IF VEHICLE IS EQUIPPED WITH MOBILE RADIO SYSTEM (HAM, CB, ETC)

The ECU has been designed so that it will not be affected by outside interference.

However, if your vehicle is equipped with a CB radio transceiver, etc. (even one with about 10 W output), it may, at times, have an affect upon ECU operation, especially if the antenna and feeder are installed nearby.

Therefore, observe the following precautions:

1. Install the antenna as far as possible from the ECU. The ECU is located behind the glove box, so the antenna should be installed in the rear of the vehicle.
2. Keep the antenna feeder as far away as possible from the ECU wires at least 20 cm (7.87 in.),and especially do not wind them together.
3. Check that the feeder and antenna are properly adjusted.
4. Do not equip your vehicle with a powerful mobile radio system.
5. Do not open the cover or the case of the ECU unless absolutely necessary. (If the IC terminals are touched, the IC may be destroyed by static electricity.)

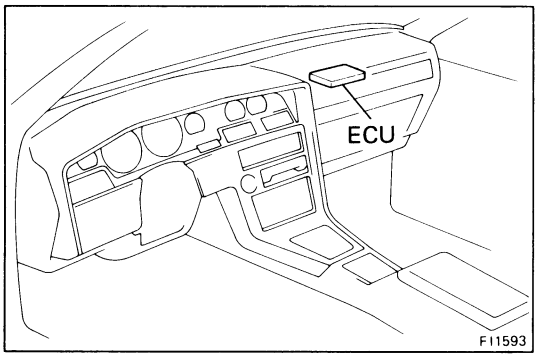

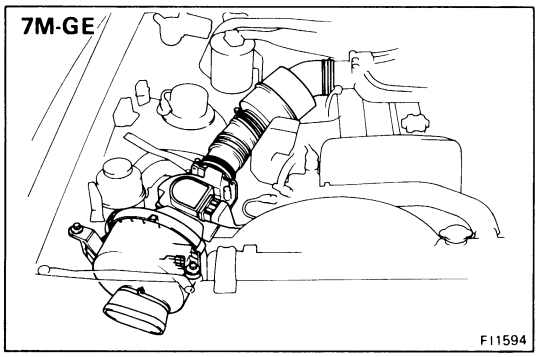

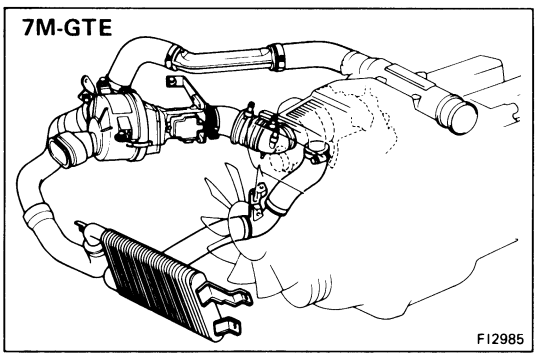

AIR INDUCTION SYSTEM

1. Separation the engine dipstick, oil filler cap, PCV hose, etc., may cause the engine to run out of tune.
2. Disconnection, looseness or cracks in the parts of the air intake system between the air flow meter and cylinder head will allow air suction and cause the engine to run out of tune.

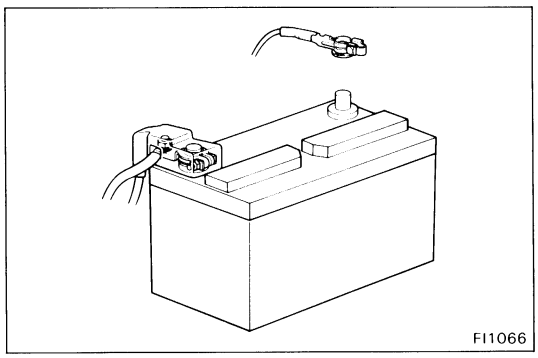
FI1066

ELECTRONIC CONTROL SYSTEM

1. Before removing EFI wiring connectors, terminals, etc., first disconnect the power by either turning the ignition switch OFF or disconnecting the battery terminals.

   HINT: Always check the diagnosis code before disconnecting the battery terminal.
2. When installing the battery, be especially careful not to incorrectly connect the positive and negative cables.
3. Do not jolt parts during removal or installation. Handle all EFI parts carefully, especially the ECU.
4. Do not be careless during troubleshooting as there are numerous transistor circuits and contact with terminals can cause further trouble.
5. Do not open the ECU cover.
6. When inspecting during rainy weather, take care to prevent entry of water. Also, when washing the engine compartment, prevent water from getting on EFI parts and wiring connectors.
7. Parts should be replaced as an assembly.

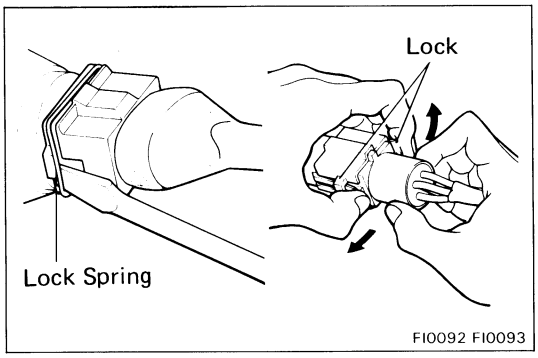

FI0092 FI0093

8. Care is required when pulling out the inserting wiring connectors.
   (a) Release the lock and pull out the connector. Pull on the connectors, not the wiring.

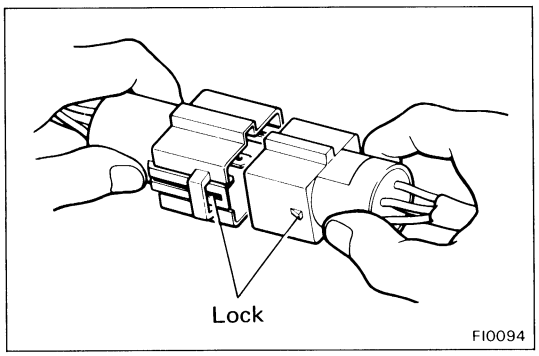

FI0094

   (b) Fully insert the connector and check that it is locked.

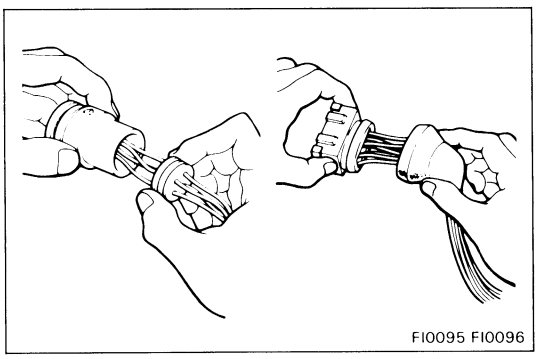
FI0095 FI0096

9. When inspecting a connector with a circuit tester.
   (a) Carefully take out the water-proofing rubber if it is a water-proof type connector.

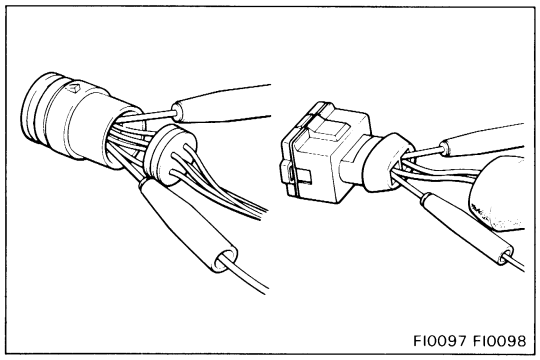

(b) Insert the tester probe into the connector from the wiring side when checking continuity, amperage or voltage.

(c) Do not apply unnecessary force to the terminal.

(d) After checking, install the water-proofing rubber on the connector securely.

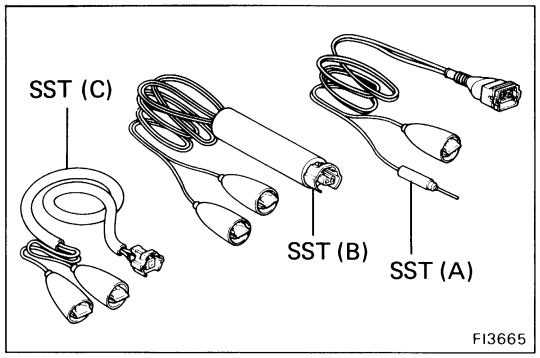

10. Use SST for inspection or testing of the injector, cold start injector or its wiring connector.

SST 7M-GE 09842-30050(A) and 09842-30070(C)
7M-GTE 09842-30050(A) and 09842-30060(B)

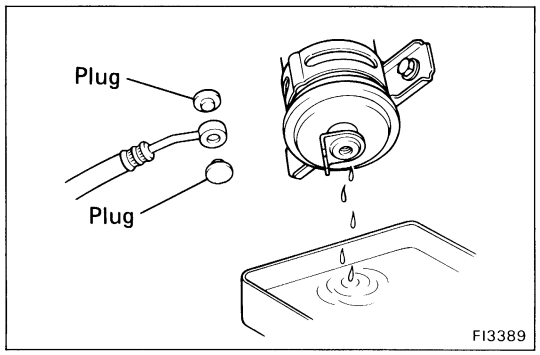

FUEL SYSTEM

1. When disconnecting the high fuel pressure line, a large amount of gasoline will spill out, so observe the following procedure.

(a) Put a container under the connection.

(b) Slowly loosen the connection.

(c) Disconnect the connection.

(d) Plug the connection with a rubber plug.

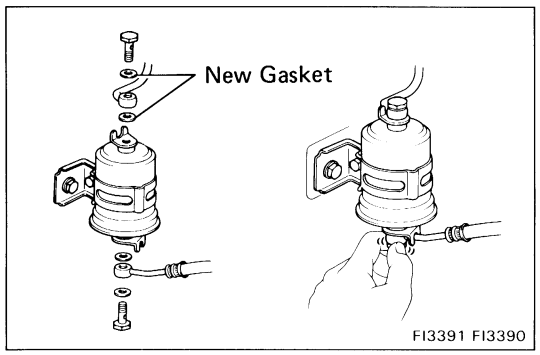

2. When connecting the flare nut or union bolt on the high pressure pipe union, observe the following procedure:

(Union bolt type)

(a) Always use a new gasket.

(b) Hand tighten the union bolt.

(c) Tighten the bolt to the specified torque.

Torque: 300 kg-cm (22 ft-lb, 29 N·m)

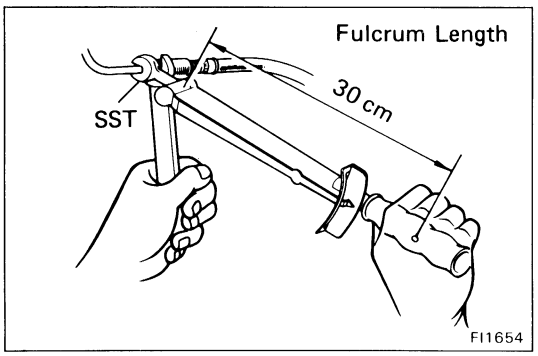

(Flare nut type)

(a) Apply a thin coat of oil to the flare nut and tighten the flare nut.

(b) Then using SST, tighten the nut to the specified torque.

SST 09631-22020

Torque: 310 kg-cm (22 ft-lb, 30 N·m)

HINT: Use a torque wrench with a fulcrum length of 30 cm (11.81 in.).

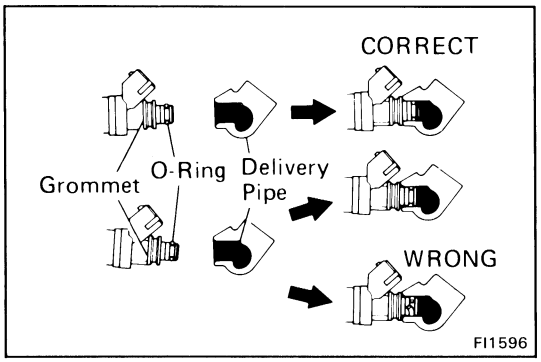

3. Observe the following precautions when removing and installing the injectors.
   (a) Never reuse a O-ring.
   (b) When placing a new O-ring on the injector, use care not to damage it in any way.
   (c) Lubricate the new O-ring with spindle oil or gasoline before installing it - never use engine, gear or brake oil.

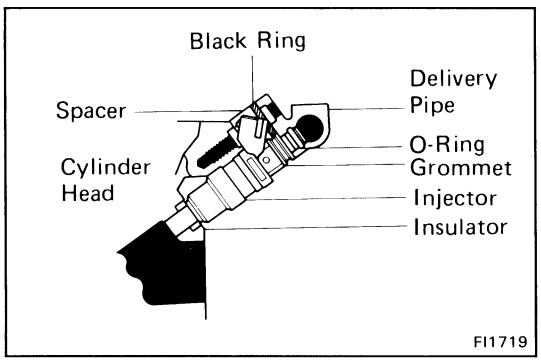

4. Install the injector to the delivery pipe and cylinder head as shown in the illustration.

   HINT: Install the spacer with the black ring side facing upward.

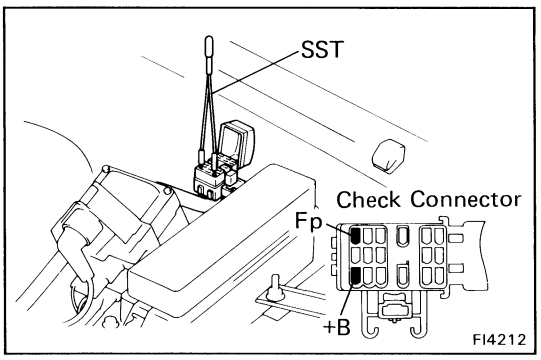

5. Confirm that there are no fuel leaks after performing any maintenance on the fuel system.
   (a) With engine stopped, turn the ignition switch ON.
   (b) Using SST, connect terminals +B and Fp of the check connector.

   SST 09843-18020

   HINT: The check connector is located near the No.2 junction block.

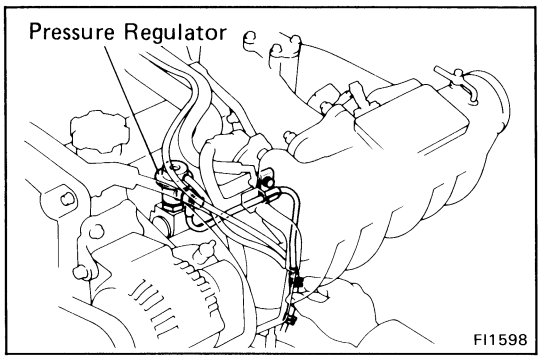

   (c) When the fuel return hose is pinched, the pressure within the high pressure line will rise to approx. 4 kg/cm^2 (57 psi, 392 kPa). In this state, check to see that there are no leaks from any part of the fuel system.

   NOTICE: Always pinch the hose. Avoid bending as it may cause the hose to crack.

TROUBLESHOOTING

TROUBLESHOOTING HINTS

1. Engine troubles are usually not caused by the EFI system. When troubleshooting, always first check the condition of the other systems.
   (a) Power source
   - Battery
   - Fusible links
   - Fuses

   (b) Body ground

   (c) Fuel supply
   - Fuel leakage
   - Fuel filter
   - Fuel pump

   (d) Ignition system
   - Spark plug
   - High-tension cord
   - Distributor (7M-GE) or cam position sensor (7M-GTE)
   - Igniter and ignition coil

   (e) Air induction system
   - Vacuum leaks

   (f) Emission control system
   - PCV system
   - EGR system

   (g) Others
   - Ignition timing (ESA system)
   - Idle speed (ISC system)

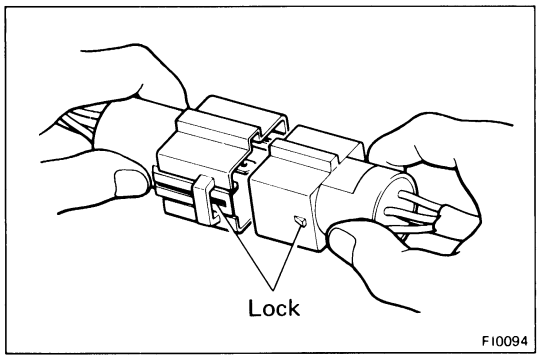

2. The most frequent cause of problems is simply a bad contact in wiring connectors. Always make sure that connections are secure.

   When inspecting the connector, pay particular attention to the following points:

   (a) Check to see that the terminals are not bent.

   (b) Check to see that the connector is pushed in completely and locked.

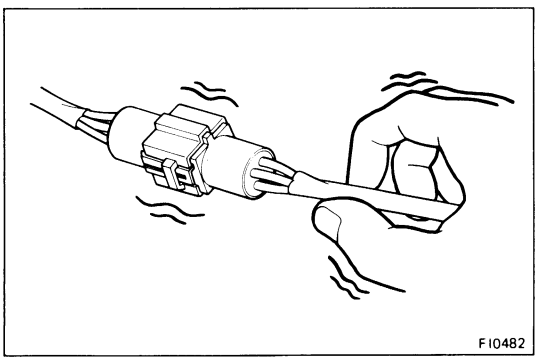

   (c) Check to see that there is no signal change when the connector is slightly tapped or wiggled.

3. Sufficiently troubleshoot for other causes before replacing the ECU. The ECU is of high quality and it is expensive.

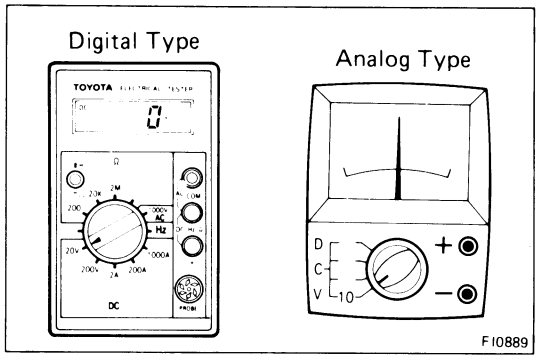

4. Use a volt/ohmmeter with high impedance (10 kΩ /V minimum) for troubleshooting of the electrical circuit. (See pages FI-30, 49)

TROUBLESHOOTING PROCEDURES

SYMPTOM — DIFFICULT TO START OR NO START (ENGINE WILL NOT CRANK OR CRANKS SLOWLY)

CHECK POWER SOURCE

BAD →
1. Battery
   (1) Connection
   (2) Gravity — drive belt — charging system
   (3) Voltage
2. Fusible links

OK ↓

CHECK STARTING SYSTEM

BAD →
1. Ignition switch
2. Starter
3. Starter relay (M/T, USA A/T)
4. Clutch start switch (M/T)
5. Neutral start switch (A/T)
6. Wiring/Connection

SYMPTOM — DIFFICULT TO START OR NO START (CRANKS OK)

CHECK DIAGNOSIS SYSTEM
Check for output of diagnostic code.
(See page FI-23)

→ Malfunction code(s) → Diagnostic code(s) (See page FI-26)

↓ Normal code

DOES ENGINE START WITH ACCELERATOR PEDAL DEPRESSED?

→ OK →
ISC system
(1) ISC valve
(2) Wiring connection

↓ NO

CHECK FOR VACUUM LEAKS IN AIR INTAKE LINE

→ BAD →
1. Oil filler cap
2. Oil dipstick
3. Hose connections
4. PCV hose
5. EGR system — EGR valve stays open

↓ OK

CHECK IGNITION SPARK
7M-GE (See page IG-5)
7M-GTE (See page IG-10)

→ BAD →
1. High-tension cords
2. Distributor (7M-GE) or cam position sensor (7M-GTE)
3. Ignition coil
4. Igniter

↓ OK

CHECK SPARK PLUGS
Plug gap: 7M-GE 1.1 mm (0.043 in.)
7M-GTE 0.8 mm (0.031 in.)

— HINT —
Check compression pressure and valve clearance if necessary.

→ NO →
1. Spark plugs
2. Compression pressure
Minimum: 9.0 kg/cm^2 (128 psi, 883 kPa) at 250 rpm
3. Valve clearance
Standard: IN 0.15 — 0.25 mm (0.006 — 0.010 in.)
EX 0.20 — 0.30 mm (0.008 — 0.012 in.)

→ BAD [All Plugs WET] →
1. Injector — Shorted or leaking
2. Injector wiring — Short circuited
3. Cold start injector — Leakage (See page FI-77)
4. Cold start injector time switch (See page FI-112)

↓ OK CONTINUED ON PAGE FI-13

OK CONTINUED FROM PAGE FI-12

CHECK FUEL SUPPLY TO INJECTOR
1. Fuel in tank
2. Fuel pressure in fuel line
   (1) Connect terminals Fp and +B of the check connector.
   (2) You can feel fuel pressure in fuel return hose.
3. Check circuit opening relay (See page FI-110)

BAD →
1. Fuel line — leakage — deformation
2. Fuse
3. Fuel pump (See page FI-70)
4. Fuel filter
5. Fuel pressure regulator (See page FI-81)
6. Circuit opening relay (See page FI-110)

OK ↓

CHECK FUEL PUMP SWITCH IN AIR FLOW METER (7M-GE)
Check continuity between terminals FC and E1 with measuring plate of air flow meter open.

BAD → Air flow meter (See page FI-94)

OK ↓

CHECK IGNITION TIMING
1. Connect terminals T_{E1} and E_1 of the check connector.
2. Check ignition timing.
   STD: 10° BTDC @ idle
   [w/ connect terminals T_{E1} and E_1]

NO → Adjust ignition timing (See page IG-20)

OK ↓

CHECK EFI ELECTRONIC CIRCUIT USING VOLT/OHMMETER
(See pages FI-30, 49)

NO →
1. Wiring connection
2. Power to ECU
   (1) Fusible links
   (2) Fuses
   (3) EFI main relay
3. Air flow meter
4. Water temp. sensor
5. Air temp. sensor
6. Injection signal circuit
   (1) Injector wiring
   (2) Resistor (7M-GTE)
   (3) ECU

SYMPTOM — ENGINE OFTEN STALLS

CHECK DIAGNOSIS SYSTEM
Check for output of diagnostic code
(See page FI-23)

→ Malfunction code(s) → Diagnostic code(s) (See page FI-26)

↓ Normal code

CHECK FOR VACUUM LEAKS IN AIR INTAKE LINE

→ BAD →
1. Oil filler cap
2. Oil dipstick
3. Hose connections
4. PCV hose

↓ OK

CHECK FUEL SUPPLY TO INJECTOR
1. Fuel in tank
2. Fuel pressure in fuel line
   (1) Connect terminals Fp and +B of the check connector.
   (2) You can feel fuel pressure in fuel return hose. (See page FI-71)
3. Check circuit opening relay (See page FI-110)

→ BAD →
1. Fuel line — leakage — deformation
2. Fuse
3. Fuel pump (See page FI-70)
4. Fuel filter
5. Fuel pressure regulator (See page FI-81)
6. Circuit opening relay (See page FI-110)

↓ OK

CHECK AIR FILTER ELEMENT

→ BAD → Element — Clean or replace

↓ OK

CHECK IDLE SPEED
STD: 7M-GE 700 rpm
7M-GTE 650 rpm

→ BAD →
ISC system
(1) Wiring connection
(2) ISC valve
(3) ECU (test by substitution)

↓ OK

CHECK IGNITION TIMING
1. Connect terminals T_{E1} and E_1 of the check connector.
2. Check ignition timing.
   STD: 10° BTDC @ idle
   [w/ connect terminals T_{E1} and E_1]

→ NO → Adjust ignition timing (See page IG-20)

↓ OK

CHECK SPARK PLUGS
Plug gap: 7M-GE 1.1 mm (0.043 in.)
7M-GTE 0.8 mm (0.031 in.)

— HINT —
Check compression pressure and valve clearance if necessary.

→ BAD →
1. Spark plugs
2. Compression pressure
   Minimum: 9.0 kg/cm^2 (128 psi, 883 kPa) at 250 rpm
3. Valve clearance
   Standard: IN 0.15 – 0.25 mm (0.006 – 0.010 in.)
   EX 0.20 – 0.30 mm (0.008 – 0.012 in.)

↓ OK CONTINUED ON PAGE FI-15

OK CONTINUED FROM PAGE FI-14

CHECK COLD START INJECTOR
(See page FI-77)

BAD →
1. Cold start injector
2. Cold start injector time switch (See page FI-112)

OK ↓

CHECK FUEL PRESSURE
(See page FI-71)

BAD →
1. Fuel pump (See page FI-70)
2. Fuel filter
3. Fuel pressure regulator (See page FI-81)

OK ↓

CHECK INJECTORS
(See page FI-83)

BAD → Injection condition

OK ↓

CHECK EFI ELECTRONIC CIRCUIT USING VOLT/OHMMETER
(See pages FI-30, 49)

BAD →
1. Wiring connection
2. Power to ECU
   (1) Fusible links
   (2) Fuses
   (3) EFI main relay
3. Air flow meter
4. Water temp. sensor
5. Air temp. sensor
6. Injection signal circuit
   (1) Injector wiring
   (2) Resistor (7M-GTE)
   (3) ECU

SYMPTOM — ENGINE SOMETIMES STALLS

CHECK DIAGNOSIS SYSTEM
Check for output of diagnostic code.
(See page FI-23)

Malfunction code(s) → Diagnostic code(s) (See page FI-26)

Normal code ↓

CHECK AIR FLOW METER
(See pages FI-94, 96)

BAD → Air flow meter

OK ↓

CHECK WIRING CONNECTORS AND RELAYS
Check for a signal change when the connector or relay is slightly tapped or wiggled.

BAD →
1. Connector
2. EFI main relay (See page FI-109)
3. Circuit opening relay (See page FI-110)

SYMPTOM — ROUGH IDLING AND/OR MISSING

CHECK DIAGNOSIS SYSTEM
Check for output of diagnostic code.
(See page FI-23)

Malfunction code(s) → Diagnostic code(s) (See page FI-26)

Normal code ↓

CHECK FOR VACUUM LEAKS IN AIR INTAKE LINE

BAD →
1. Oil filler cap
2. Oil dipstick
3. Hose connections
4. PCV hoses
5. EGR system — EGR valve stays open

OK ↓

CHECK AIR FILTER ELEMENT

BAD → Element — Clean or replace

OK ↓

CHECK IDLE SPEED
STD: 7M-GE 700 rpm
7M-GTE 650 rpm

BAD →
ISC system
(1) Wiring connection
(2) ISC valve
(3) ECU (test by substitution)

OK ↓

CHECK IGNITION TIMING
1. Connect terminals T_{E1} and E_1 of the check connector.
2. Check ignition timing.
STD: 10° BTDC @ idle
[w/ connect terminals T_{E1} and E_1]

NO → Adjust ignition timing (See page IG-20)

OK ↓

CHECK SPARK PLUGS
Plug gap: 7M-GE 1.1 mm (0.043 in.)
7M-GTE 0.8 mm (0.031 in.)

—HINT—
Check compression pressure and valve clearance if necessary.

NO →
1. Spark plugs
2. Compression pressure
Minimum: 9.0 kg/cm^2
(128 psi, 883 kPa)
at 250 rpm
3. Valve clearance
Standard: IN 0.15 – 0.25 mm
(0.006 – 0.010 in.)
EX 0.20 – 0.30 mm
(0.008 – 0.012 in.)

OK ↓ CONTINUED ON PAGE FI-17

OK CONTINUED FROM PAGE FI-16

CHECK COLD START INJECTOR
(See page FI-77)

BAD →
1. Cold start injector
2. Cold start injector time switch
   (See page FI-112)

OK ↓

CHECK FUEL PRESSURE
(See page FI-71)

BAD →
1. Fuel pump (See page FI-70)
2. Fuel filter
3. Fuel pressure regulator
   (See page FI-81)

OK ↓

CHECK INJECTORS
(See page FI-83)

BAD → Injection condition

OK ↓

CHECK EFI ELECTRONIC CIRCUIT USING VOLT/OHMMETER
(See pages FI-30, 49)

BAD →
1. Wiring connection
2. Power to ECU
   (1) Fusible links
   (2) Fuses (EFI 15A, IGN 7.5A)
   (3) EFI main relay
3. Air flow meter
4. Water temp. sensor
5. Air temp. sensor
6. Throttle position sensor
7. Injection signal circuit
   (1) Injector wiring
   (2) Resistor (7M-GTE)
   (3) ECU

SYMPTOM — HIGH ENGINE IDLE SPEED (NO DROP)

CHECK ACCELERATOR LINKAGE
- BAD → Linkage — Stuck
- OK ↓

CHECK DIAGNOSIS SYSTEM
Check for output of diagnostic code.
(See page FI-23)
- Malfunction code(s) → Diagnostic code(s) (See page FI-26)
- Normal code ↓

CHECK ISC SYSTEM
- BAD →
  1. Wiring connection
     (Air con, Throttle position sensor—ECU)
  2. ISC valve
  3. Air conditioner switch
- OK ↓

CHECK THROTTLE POSITION SENSOR
- BAD → Throttle body
- OK ↓

CHECK FUEL PRESSURE
(See page FI-71)
- BAD → Fuel pressure regulator — High pressure
- OK ↓

CHECK COLD START INJECTOR
(See page FI-77)
- BAD → Cold start injector — Leakage
- OK ↓

CHECK INJECTORS (See page FI-83)
- BAD → Injectors — Leakage, Injection quality
- OK ↓

CHECK EFI ELECTRONIC CIRCUIT USING VOLT/OHMMETER
(See pages FI-30, 49)
- BAD →
  1. Wiring connection
  2. Power to ECU
     (1) Fusible links
     (2) Fuses (EFI 15A, IGN 7.5A)
     (3) EFI main relay
  3. Air flow meter
  4. Water temp. sensor
  5. Air temp. sensor
  6. Injection signal circuit
     (1) Injector wiring
     (2) Resistor (7M-GTE)
     (3) ECU

SYMPTOM — ENGINE BACKFIRES-Lean Fuel Mixture

CHECK DIAGNOSIS SYSTEM
Check for output of diagnostic code.
(See page FI-23)

Malfunction code(s) → Diagnostic code(s) (See page FI-26)

Normal code ↓

CHECK FOR VACUUM LEAKS IN AIR INTAKE LINE

BAD →
1. Oil filler cap
2. Oil dipstick
3. Hose connections
4. PCV hoses

OK ↓

CHECK IGNITION TIMING
1. Connect terminals T_{E1} and E_1 of the check connector.
2. Check ignition timing.
   STD: 10° BTDC @ idle
   [w/ connect terminals T_{E1} and E_1]

NO → Adjust ignition timing (See page IG-20)

OK ↓

CHECK COLD START INJECTOR
(See page FI-77)

BAD →
1. Cold start injector
2. Cold start injector time switch (See page FI-112)

OK ↓

CHECK FUEL PRESSURE
(See page FI-71)

BAD →
1. Fuel pump (See page FI-70)
2. Fuel filter
3. Fuel pressure regulator (See page FI-81)

OK ↓

CHECK INJECTORS
(See page FI-83)

BAD → Injectors — Clogged

OK ↓

CHECK EFI ELECTRONIC CIRCUIT USING VOLT/OHMMETER
(See pages FI-30, 49)

BAD →
1. Wiring connection
2. Power to ECU
   (1) Fusible links
   (2) Fuses
   (3) EFI main relay
3. Air flow meter
4. Water temp. sensor
5. Air temp. sensor
6. Throttle position sensor
7. Injection signal circuit
   (1) Injection wiring
   (2) Resistor (7M-GTE)
   (3) ECU
   (4) Fuel cut signal
8. Oxygen sensor(s)

SYMPTOM — MUFFLER EXPLOSION (AFTER FIRE) -Rich Fuel Mixture-Misfire

CHECK DIAGNOSIS SYSTEM
Check for output of diagnostic code.
(See page FI-23)

Malfunction code(s) → Diagnostic code(s) (See page FI-26)

Normal code ↓

CHECK IGNITION TIMING
1. Connect terminals T_{E1} and E_1 of the check connector.
2. Check ignition timing.
   STD: 10° BTDC @ Idle
   [w/ connect terminals T_{E1} and E_1]

NO → Adjust ignition timing (See page IG-20)

OK ↓

CHECK COLD START INJECTOR
(See page FI-77)

BAD →
1. Cold start injector
2. Cold start injector time switch (See page FI-112)

OK ↓

CHECK INJECTORS

BAD → Injectors — Leakage

OK ↓

CHECK SPARK PLUGS
Plug gap: 7M-GE 1.1 mm (0.043 in.)
7M-GTE 0.8 mm (0.031 in.)

— HINT —
Check compression pressure and valve clearance if necessary.

NO →
1. Spark plugs
2. Compression pressure
   Minimum: 9.0 kg/cm^2 (128 psi, 883 kPa) at 250 rpm
3. Valve clearance
   Standard: IN 0.15 — 0.25 mm (0.006 — 0.010 in.)
   EX 0.20 — 0.30 mm (0.008 — 0.012 in.)

OK ↓

CHECK EFI ELECTRONIC CIRCUIT USING VOLT/OHMMETER
(See pages FI-30, 49)

BAD →
1. Throttle position sensor
2. Injection signal circuit
   (1) Injector wiring
   (2) Resistor (7M-GTE)
   (3) ECU
3. Oxygen sensor(s)

SYMPTOM — ENGINE HESITATES AND/OR POOR ACCELERATION

CHECK CLUTCH AND BRAKE

BAD →
1. Clutch — Slips
2. Brakes — Drag

OK ↓

CHECK FOR VACUUM LEAKS IN AIR INTAKE LINE

BAD →
1. Oil filler cap
2. Oil dipstick
3. Hose connections
4. PCV hoses
5. EGR system — EGR valve system open

OK ↓

CHECK AIR FILTER ELEMENT

BAD → Element — Clean or replace

OK ↓

CHECK DIAGNOSIS SYSTEM
Check for output of diagnostic code.
(See page FI-23)

Malfunction code(s) → Diagnostic code(s) (See page FI-26)

Normal code ↓

CHECK IGNITION SPARK
7M-GE (See page IG-5)
7M-GTE (See page IG-10)

BAD →
1. High-tension cords
2. Distributor (7M-GE) or cam position sensor (7M-GTE)
3. Ignition coil
4. Igniter

OK ↓

CHECK IGNITION TIMING
1. Connect terminals T_{E1} and E_1 of the check connector.
2. Check ignition timing.
   STD: 10° BTDC @ idle
   [w/ connect terminals T_{E1} and E_1]

NO → Adjust ignition timing (See page IG-20)

OK ↓

CHECK FUEL PRESSURE
(See page FI-71)

BAD →
1. Fuel pump (See page FI-70)
2. Fuel filter
3. Fuel pressure regulator (See page FI-81)

OK ↓

CHECK INJECTORS
(See page FI-83)

BAD → Injection condition

OK CONTINUED ON PAGE FI-22

OK CONTINUED FROM PAGE FI-21

CHECK SPARK PLUGS
Plug gap: 7M-GE 1.1 mm (0.043 in.)
7M-GTE 0.8 mm (0.031 in.)

– HINT –
Check compression pressure and valve clearance if necessary.

NO →

1. Spark plugs
2. Compression pressure
   Minimum: 9.0 kg/cm^2 (128 psi, 883 kPa) at 250 rpm
3. Valve clearance
   Standard: IN 0.15 – 0.25 mm (0.006 – 0.010 in.)
   EX 0.20 – 0.30 mm (0.008 – 0.012 in.)

OK ↓

CHECK EFI ELECTRONIC CIRCUT USING VOLT/OHMMETER
(See pages FI-30, 49)

BAD →

1. Wiring connection
2. Power to ECU
   (1) Fusible links
   (2) Fuses
   (3) EFI main relay
3. Air flow meter
4. Water temp. sensor
5. Air temp. sensor
6. Throttle position sensor
7. Injection signal circuit
   (1) Injector wiring
   (2) Resistor (7M-GTE)
   (3) ECU

DIAGNOSIS SYSTEM

DESCRIPTION

The ECU contains a built-in self-diagnosis system by which troubles with the engine signal network are detected and a ''CHECK ENGINE'' warning light on the instrument panel flashes.
By analyzing various signals as shown in the later tables (See pages FI-26 to 28) the Electronic Control Unit (ECU) detects system malfunctions which are related to the various operating parameter sensors or to the actuator. The ECU stores the failure until the diagnosis system is cleared by removing the EFI fuse with the ignition switch off.
A ''CHECK ENGINE'' warning light on the instrument panel informs the driver that a malfunction has been detected. The light goes out automatically when the malfunction has been cleared.

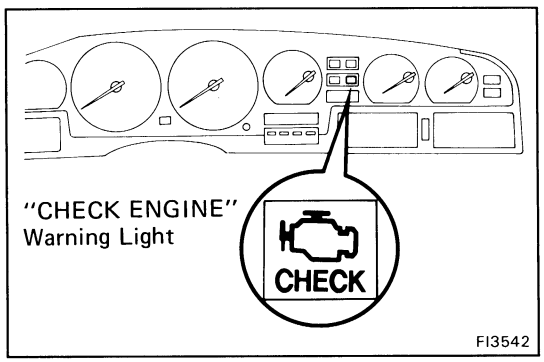

''CHECK ENGINE'' WARNING LIGHT CHECK

1. The ''CHECK ENGINE'' warning light will come on when the ignition switch is placed at ON and the engine is not running.
2. When the engine is started, the ''CHECK ENGINE'' warning light should go out.

   If the light remains on, the diagnosis system has detected a malfunction or abnormality in the system.

OUTPUT OF DIAGNOSTIC CODES

To obtain an output of diagnostic codes, proceed as follows:

1. Initial conditions
   (a) Battery voltage above 11 volts
   (b) Throttle valve fully closed (throttle position sensor IDL points closed)
   (c) Transmission in neutral position
   (d) Accessory switches OFF

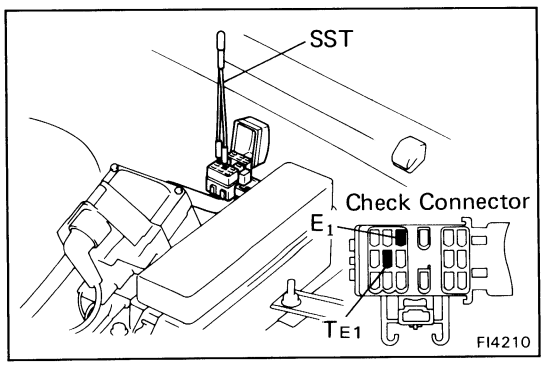

2. Turn the ignition switch to ON. Do not start the engine.
3. Using SST, connect terminals T_{E1} and E_1 of the check connector.

   SST 09843-18020

   HINT: The check connector is located near the ignition coil.

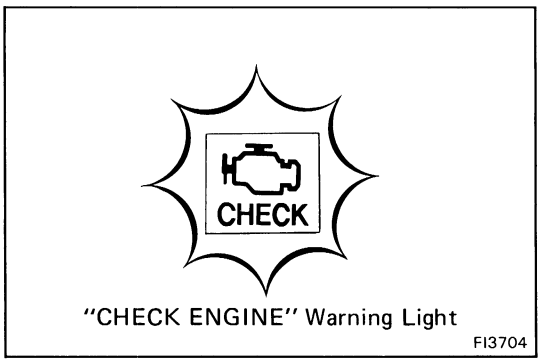

4. Read the diagnostic code as indicated by the number of flashes of the "CHECK ENGINE" warning light.

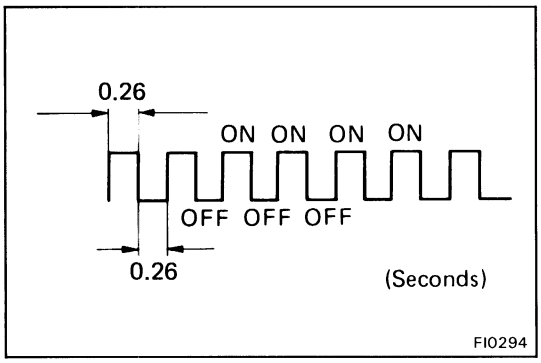

Diagnostic code (See page FI-26)

(a) Normal System Operation (no malfunction)

- The light will alternately blink on and off for 0.26 second intervals.

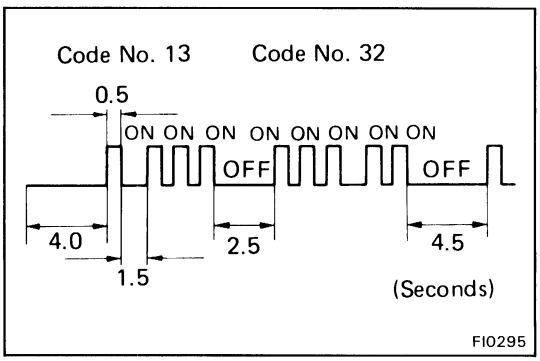

(b) Malfunction Code Indication

- In the event of a malfunction, the light will blink every 0.52 seconds. The first number of blinks will equal the first digit of a 2-digit diagnostic code and, after a 1.5 second pause, the 2nd number of blinks will equal the 2nd. If there are two or more codes, there will be a 2.5 second pause between each.
- After all the codes have been signalled there will be a 4.5 second pause and they will all be repeated as long as the terminals T_{E1} and E_1 of the check connector are connected.

HINT: In the event of a number of trouble codes, indication will begin from the smaller value and continue to the larger.

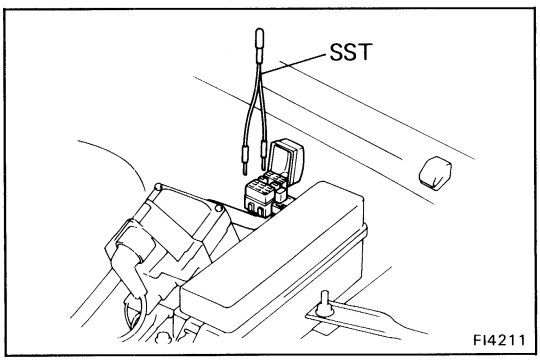

5. After the diagnosis check, remove SST.

SST 09843-18020

CANCELLING OUT DIAGNOSTIC CODE

1. After repairing of the trouble, the diagnostic code retained in memory by the ECU must be cancelled out by removing the EFI fuse 15A for 30 seconds or more, depending on ambient temperature (the lower the temperature, the longer the fuse must be left out) with the ignition switch off.

   HINT:
   - Cancellation can also be done by removing the battery negative (—) terminal, but in this case other memory systems (radio ETR, clock etc.) will also be cancelled out.
   - If the diagnostic code is not cancelled out, it will be retained by the ECU and appear along with a new code in the event of future trouble.
   - If it is necessary to work on engine components requiring removal of the battery terminal, a check must first be made to see if a diagnostic code has been recorded.

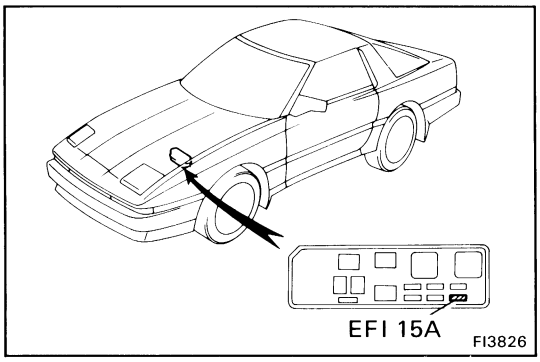

2. After cancellation, road test the vehicle to confirm that the ''normal'' code is now displayed by the ''CHECK ENGINE'' warning light.

   If the same diagnostic code is still indicated, it means that the trouble area has not been repaired thoroughly.

DIAGNOSIS INDICATION

1. When 2 or more codes are indicated, the lowest number (code) will appear first.
2. All detected diagnostic codes, except code Nos.51 and 53, will be retained in memory by the ECU from the time of detection until cancellation.
3. Once the malfunction is cleared, the ''CHECK ENGINE'' warning light on the instrument panel will go out but the diagnostic code(s) remains stored in ECU memory (except for code Nos.51 and 53).

DIAGNOSTIC CODES

Code No.	Number of "CHECK" engine blinks	System	Diagnosis	Trouble area	See page
—	FI1604	Normal	This appears when none of the other codes are identified.	—	—
12	FI1606	RPM Signal	No "NE" of "G" signal to ECU within 2 seconds after engine has been cranked.	• Distributor (cam position sensor) circuit • Distributor (cam position sensor) • Starter signal circuit • ECU	IG-3
13	FI1607	RPM Signal	No "NE" signal to ECU when engine speed is above 1,000 rpm.	• Distributor (cam position sensor) circuit • Distributor (cam position sensor) • ECU	—
14	FI1608	Ignition Signal	NO "IGF" signal to ECU "A" times in succession. "A" 7M-GE 6—8 7M-GTE 3	• Ignition and ignition coil circuit • Igniter and ignition coil • ECU	—
21	FI1609	Oxygen Sensor Signal	During air-fuel ratio feedback correction, voltage output from the oxygen sensor does not exceed a set value on the lean side and the rich side continuously for a certain period.	• Oxygen sensor circuit • Oxygen sensor • ECU	—
		*1 Oxygen Sensor Heater Signal	Open or short circuit in oxygen sensor heater signal (HT).	• Oxygen sensor heater circuit • Oxygen sensor heater • ECU	—
22	FI1610	Water Temp. Sensor Signal	Open or short circuit in water temp. sensor signal (THW).	• Water temp. sensor circuit • Water temp. sensor • ECU	—
24	FI1611	Intake Air Temp. Sensor Signal	Open or short circuit in intake air temp. sensor signal (THA).	• Intake air temp. sensor circuit • Intake air temp. sensor • ECU	FI-40, 60

DIAGNOSTIC CODES (Cont'd)

Code No.	Number of "CHECK" engine blinks	System	Diagnosis	Trouble area	See page
25	FI2562	Air-Fuel Ratio Lean Malfunction	(Calif.) (1) When air-fuel ratio feedback compensation value or adaptive control value continues at the upper (lean) or lower (rich) limit renewed for a certain period of time. (2) When air-fuel ratio feedback comensation value of adaptive control value feedback frequency is abnormally high during feedback condition. (3) When marked variation is detected in engine revolutions for each cylinder during idle switch on and feedback condition. HINT: For conditions (2) and (3), since neither a lean (Code No.25) nor a rich (Code No.26) diagnosis displayed consecutively. (Others) When air-fuel ratio feedback correction value or adaptive control value continues at the upper (lean) or lower (rich) limit for a certain period of time or adaptive control value is not renewed for a certain period of time.	• Injector circuit • Injector • Fuel line pressure • Air flow meter • Air intake system • Oxygen sensor circuit • Oxygen sensor • Ignition system • Water temp. sensor • ECU	—
26	FI2563	Air-Fuel Ratio Rich Malfunction		• Injector circuit • Injector • Fuel line pressure • Air flow meter • Cold start injector • Oxygen sensor circuit • Oxygen sensor • Water temp. sensor • ECU	—
*2 27	FI2617	Sub-Oxygen Sensor Signal	Open or short circuit in sub-oxygen sensor signal (OX2).	• Sub-oxygen sensor circuit • Sub-oxygen sensor • ECU	—
		Sub-Oxygen Sensor Heater	Open or short circuit in sub-oxygen sensor heater signal (HT).	• Sub-oxygen sensor heater circuit • Sub-oxygen sensor heater circuit • ECU	
31	FI1612	Air Flow Meter Signal	(7M-GE) Open circuit in VC signal or short circuit between VS and E2 when idle contacts are closed. (7M-GTE) Open or Short circuit in air flow meter signal.	• Air flow meter circuit • Air flow meter • ECU	FI-38
*3 32	FI1613	Air Flow Meter Signal	Open circuit in E2 or short circuit between VC and VS.	• Air flow meter circuit • Air flow meter • ECU	FI-57

DIAGNOSTIC CODES (Cont'd)

Code No.	Number of "CHECK" engine blinks	System	Diagnosis	Trouble area	See page
*1 34	FI2818	Turbocharger Pressure	*4 Turbocharger pressure is abnormal.	• Turbocharger • Air flow meter • Intercooler system • ECU	—
*1 35	FI4549	HAC Sensor Signal	Open or short circuit in HAC sensor signal.	• ECU	—
41	FI1614	Throttle Position Sensor Signal	Open or short circuit in throttle position sensor signal (VTA).	• Throttle position sensor circuit • Throttle position sensor • ECU	FI-36, 55
42	FI1615	Vehicle Speed Sensor Signal	No "SPD" signal to ECU for 8 seconds when engine speed is between 2,500 rpm and 4,500 (7M-GE) or 4,000 (7M-GTE) rpm and coolant temp. is below 80°C (176°F) and neutral start switch is off.	• Vehicle speed sensor circuit • Vehicle speed sensor • ECU	—
43	FI1616	Starter Signal	No "STA"signal to ECU until engine speed reaches 800 rpm with vehicle not moving.	• Ignition switch circuit • Ignition switch • ECU	FI-42, 62
52	FI1618	Knock Sensor Signal	Open or short circuit in knock sensor signal.	• Knock sensor circuit • Knock sensor • ECU	—
53	FI1619	Knock Control Signal in ECU	Knock control program faulty.	• ECU	—
*5 71	FI2622	EGR System Malfunction	• EGR gas temp. below predetermined level during EGR operation. • Open circuit in EGR gas temp. sensor signal (THG).	• EGR system (EGR valve, EGR hose etc.) • EGR gas temp. sensor circuit • EGR gas temp. sensor • VSV for EGR • VSV for EGR circuit • ECU	FI-48, 69
51	FI1617	Switch Condition Signal	No "IDL" signal, "NSW" signal or "A/C" signal to ECU, during diagnosis check.	• A/C switch circuit • A/C switch • A/C amplifier • Throttle position sensor circuit • Throttle position sensor • ECU	—

*1 7M-GTE
*2 7M-GE (California vehicles)
*3 7M-GE
*4 Abnormalities in the air flow meter may also be detected.
*5 California vehicles

INSPECTION OF DIAGNOSIS CIRCUIT

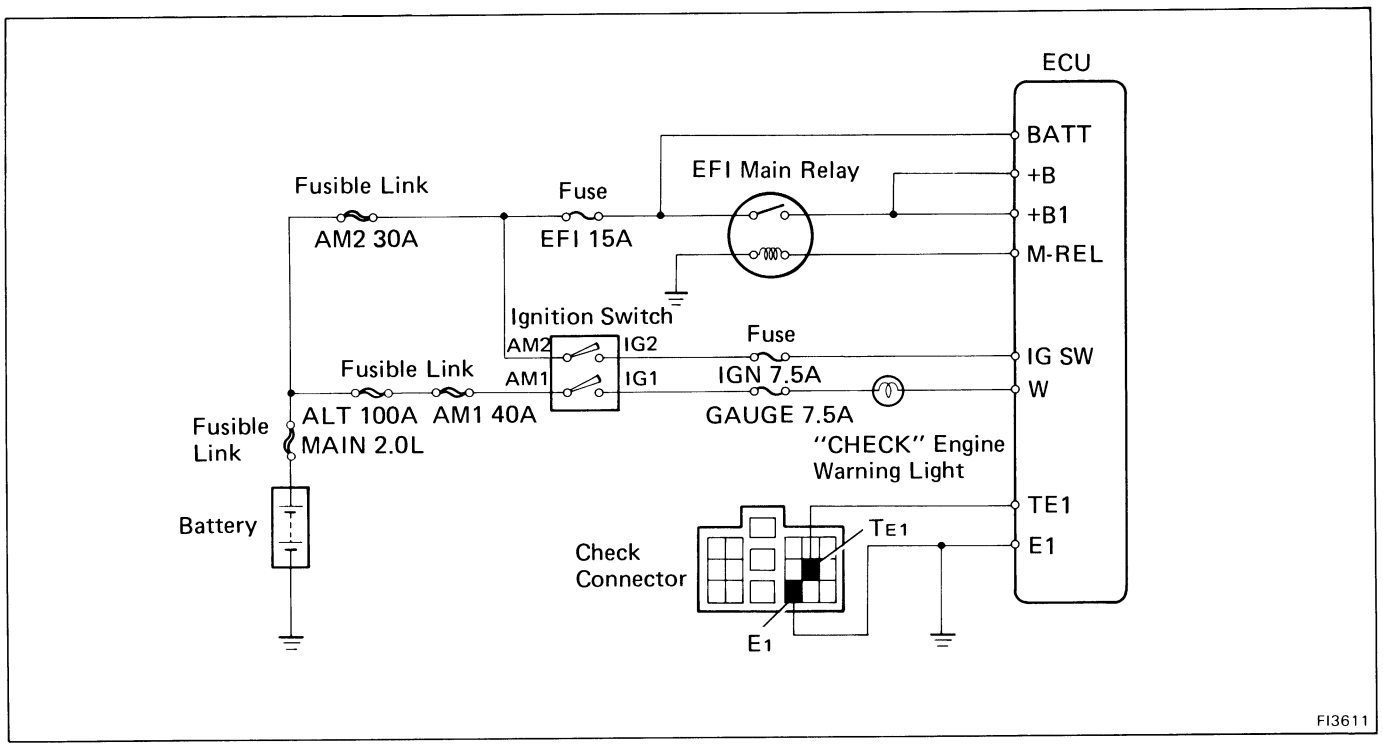

1. Does "CHECK ENGINE" warning light come on when ignition switch is at ON?
   - YES → System Normal
   - NO ↓
2. Does "CHECK ENGINE" warning light come on when ECU terminal W is grounded to the body?
   - YES → Check wiring between ECU terminal E1 and body ground.
     - OK → Try another ECU.
     - BAD ↓ Repair or replace.
   - NO ↓
3. Check bulb, fuse and wiring between ECU and ignition switch.
   - BAD ↓ Repair or replace.

2. Does "CHECK ENGINE" warning light go off when the engine is started?
   - YES → System Normal
   - NO ↓
3. Check wiring between ECU and "CHECK ENGINE" warning light.
   - BAD → Repair.
   - OK ↓
4. Is there diagnostic code output when check connector terminals T_{E1} and E_1 are connected?
   - NO → Check wiring between ECU terminal TE1 and check connector terminal T_{E1}, and ECU terminal E1 and check connector terminal E_1.
     - OK ↓ Try another ECU.
   - YES ↓
5. Does "CHECK ENGINE" warning light go out after repair according to malfunction code?
   - NO → Further repair required.
   - YES ↓
6. System OK → Cancel out diagnostic code.

TROUBLESHOOTING WITH VOLT/OHMMETER (7M-GE)

HINT: The following troubleshooting procedures are designed for inspection of each separate system, therefore the procedure may vary somewhat. However, troubleshooting should be performed referring to the inspection methods described in this manual.

Before beginning inspection, it is best to first make a simple check of the fuses, fusible links and condition of the connectors.

The following troubleshooting procedures are based on the supposition that the trouble lies in either a short or open circuit in a component outside the computer or a short circuit within the computer.

If engine trouble occurs even though proper operating voltage is detected in the computer connector, then it can be assumed the computer is faulty and should be replaced.

LOCATION OF FUSES AND FUSIBLE LINKS

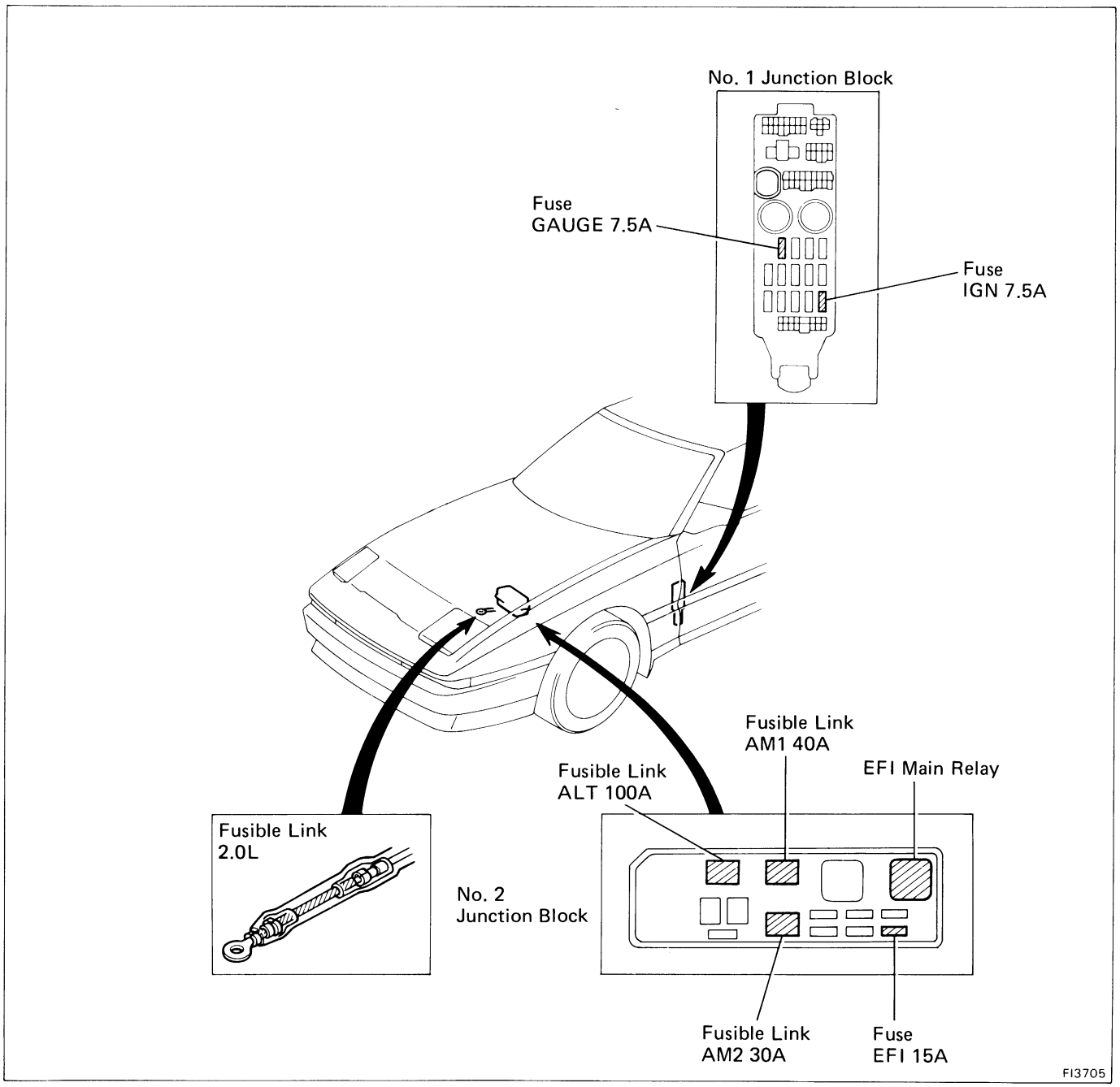

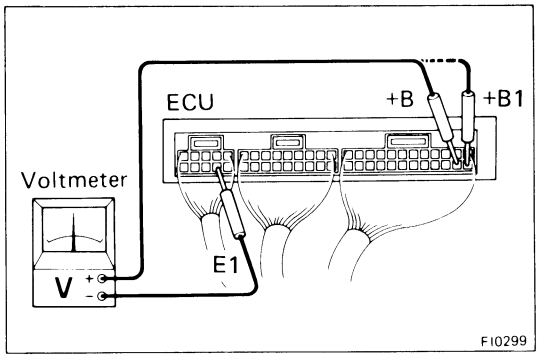

EFI SYSTEM CHECK PROCEDURE

HINT:
- Perform all voltage measurements with the cennectors connected.
- Verify that the battery voltage is 11 V or above when the ignition switch is at ON.

Using a voltmeter with high impedance (10 kΩ/V minimum), measure the voltage at each terminal of the wiring connector.

Terminals of ECU

Symbol	Terminal Name	Symbol	Terminal Name	Symbol	Terminal Name
E01	POWER GROUND	TE1	CHECK CONNECTOR	L3	TEMS (ECT) COMPUTER
E02	POWER GROUND	G2	DISTRIBUTOR	EGR	VSV (EGR)
No. 10	INJECTOR (No. 1 and 4)	VTA	THROTTLE POSITION SENSOR	A/C	A/C MAGNETIC SWITCH
No. 20	INJECTOR (No. 2 and 6)	NE	DISTRIBUTOR	SPD	SPEEDOMETER
STA	STARTER SWITCH	IDL	THROTTLE POSITION SENSOR	W	WARNING LIGHT
No. 30	INJECTOR (No. 3 and 5)	IGT	IGNITER	FP	FUEL PUMP RELAY
STJ	COLD START INJECTOR	*1 THG	EGR GAS TEMP. SENSOR	DFG	DEFOGGER RELAY
E1	COMPUTER GROUND	IGF	IGNITER	THA	AIR TEMP. SENSOR
NSW	NEUTRAL START SWITCH (A/T)	*1 OX2	SUB-OXYGEN SENSOR	*2 ECT	ECT COMPUTER
N/C	CLUTCH SWITCH (M/T)	THW	WATER TEMP. SENSOR	VS	AIR FLOW METER
*1 HT	OXYGEN SENSOR HEATER	KNK	KNOCK SENSOR	LP	HEADLIGHT RELAY
ISC1	ISC MOTOR NO. 1 COIL	OX1	OXYGEN SENSOR	VC	AIR FLOW METER
ISC3	ISC MOTOR NO. 3 COIL	E2	SENSOR GROUND	*1 E11	COMPUTER GROUND
ISC2	ISC MOTOR NO. 2 COIL	VSV1	VSV (AIR CONTROL)	BATT	BATTERY
ISC4	ISC MOTOR NO. 4 COIL	L1	TEMS (ECT) COMPUTER	+B	EFI MAIN RELAY
G⊖	DISTRIBUTOR	–	–	IG SW	IGNITION SWITCH
VF1	CHECK CONNECTOR	L2	TEMS (ECT) COMPUTER	+B1	EFI MAIN RELAY
G1	DISTRIBUTOR	M-REL	EFI MAIN RELAY (COIL)	–	–

ECU Terminals

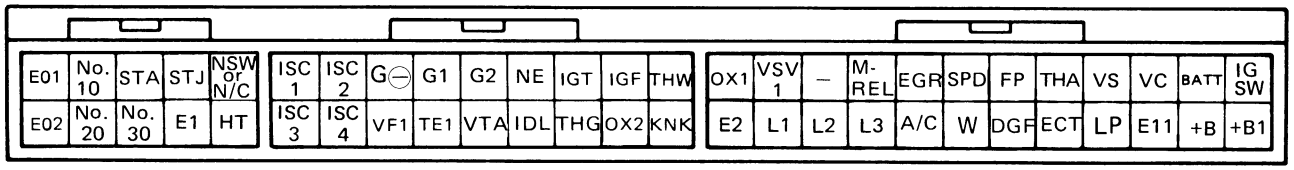

*1 California vehicles only
*2 A/T only

FI0574

Voltage at ECU Wiring Connectors

No.	Terminals	Condition		STD Voltage	See Page
1	BATT – E1	–		10 – 14	FI-33
	IG SW – E1	Ignition SW ON		10 – 14	FI-34
	M-REL – E1				
	+B (+B1) – E1				FI-35
2	IDL – E2	Ignition SW ON	Throttle valve open	10 – 14	FI-36
	VC – E2		–	4 – 6	FI-37
	VTA – E2		Throttle valve fully closed	0.1 – 1.0	
			Throttle valve fully open	4 – 5	
3	VC – E2	Ignition SW ON	–	4 – 6	FI-38
	VS – E2		Measuring plate fully closed	3.7 – 4.3	
			Measuring plate fully open	0.2 – 0.5	
		Idling		2.3 – 2.8	
		3,000 rpm		1.0 – 2.0	
4	No. 10 E01 No. 20 – No. 30 E02	Ignition SW ON		10 – 14	FI-39
5	THA – E2	Ignition SW ON	Intake air temperature 20°C (68°F)	1 – 3	FI-40
6	THW – E2	Ignition SW ON	Coolant temperature 80°C (176°F)	0.1 – 1.0	FI-41
7	STA – E1	Cranking		6 – 14	FI-42
8	IGT – E1	Idling		0.7 – 1.0	FI-43
9	ISC1 ~ ISC4 – E1	Ignition SW ON		9 – 14	FI-44
10	W – E1	No trouble ("CHECK ENGINE" warning light off) and engine running		8 – 14	FI-45
11	A/C – E1	Air conditioning ON		10 – 14	FI-46

ECU Terminals

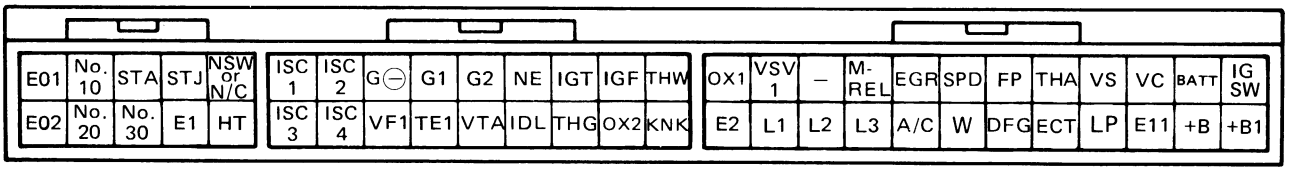

FI0574

No.	Terminals	Trouble	Condition	STD Voltage
1	BATT – E1	No voltage	—	10 – 14 V
	IG SW – E1	No voltage	Ignition switch ON	10 – 14 V
	M-REL – E1	No voltage	Ignition switch ON	10 – 14 V
	+B (+B1) – E1	No voltage	Ignition switch ON	10 – 14 V

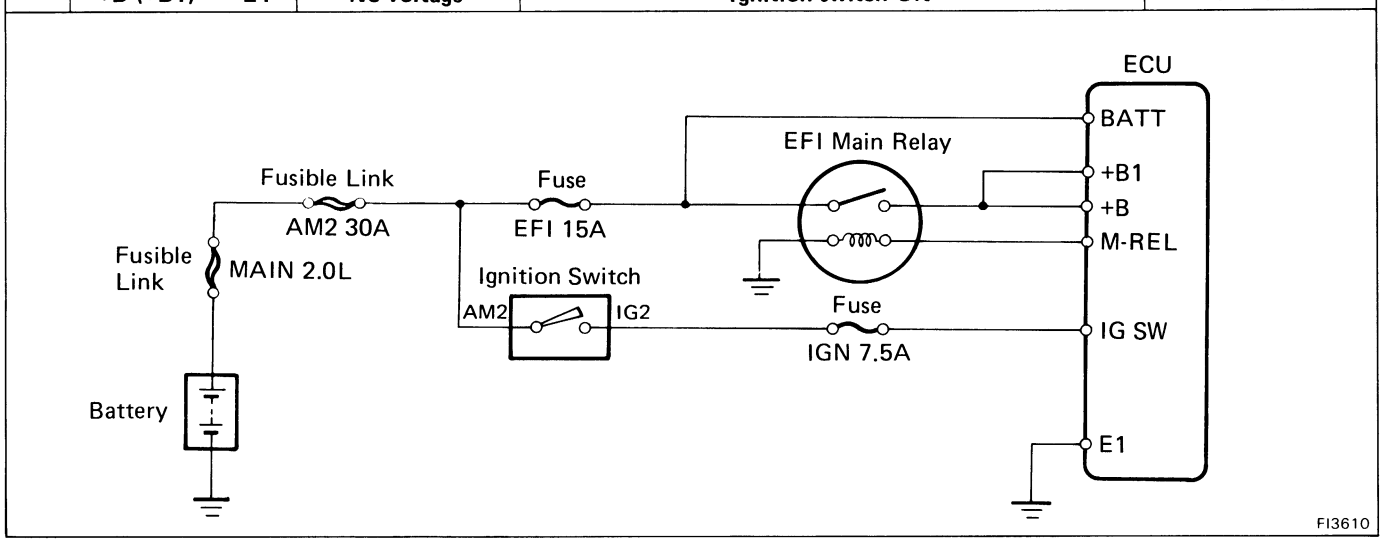

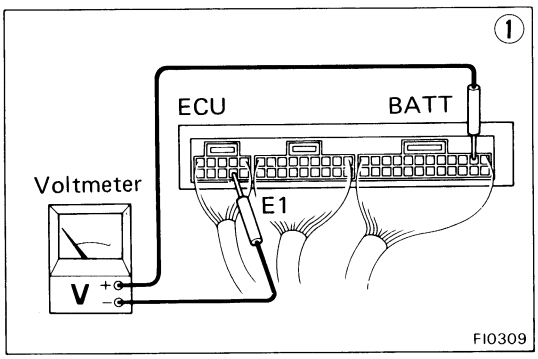

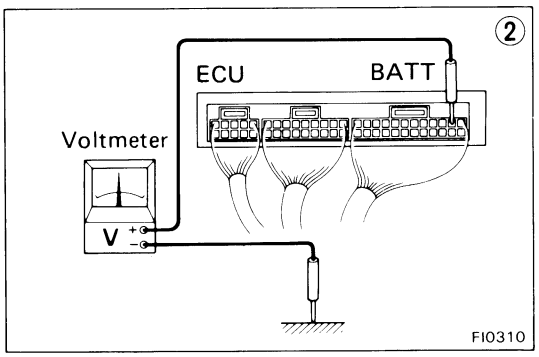

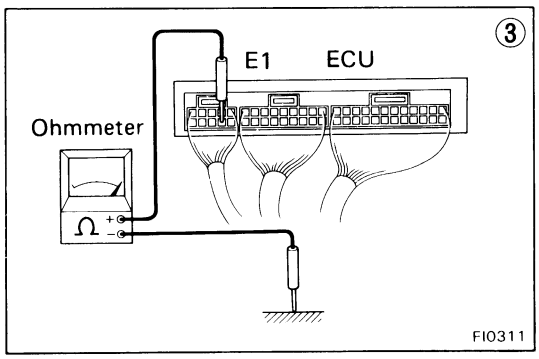

- **BATT – E1**

① There is no voltage between ECU terminals BATT and E1.

↓

② Check that there is voltage between ECU terminal BATT and body ground.

NO → Check fuse and fusible links.

OK ↓

③ Check wiring between ECU terminal E1 and body ground.

OK → Try another ECU.

BAD → Repair or replace.

Check fuse and fusible links.

BAD → Replace.

OK ↓

Check wiring between ECU terminal and battery.

BAD → Repair or replace.

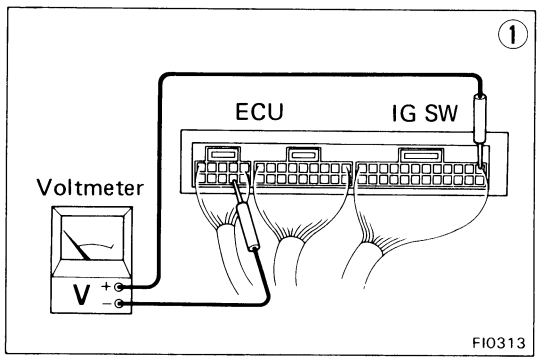

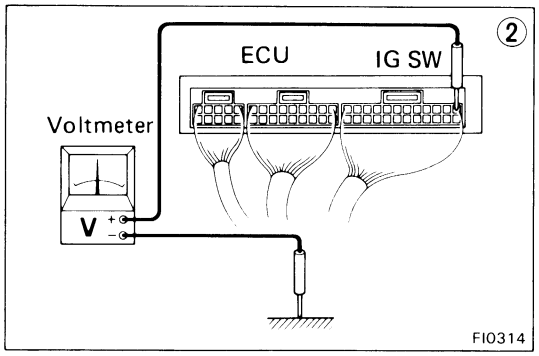

- **IG SW – E1**

① There is no voltage between ECU terminals IG SW and E1. **(IG SW ON)**

↓

② Check that there is voltage between ECU terminal IG SW and body ground. **(IG SW ON)**

NO → Check fuse, fusible links and ignition switch. → BAD → Repair or replace.

OK → Check wiring between ECU terminal E1 and body ground.

OK → Try another ECU.

BAD → Repair or replace.

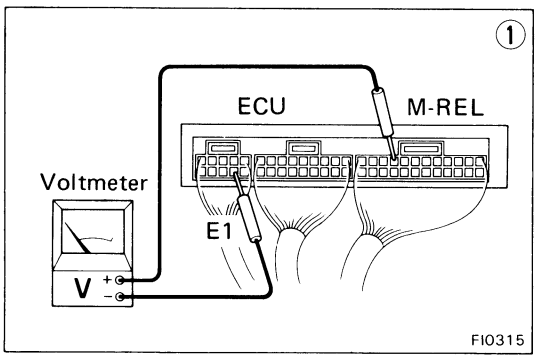

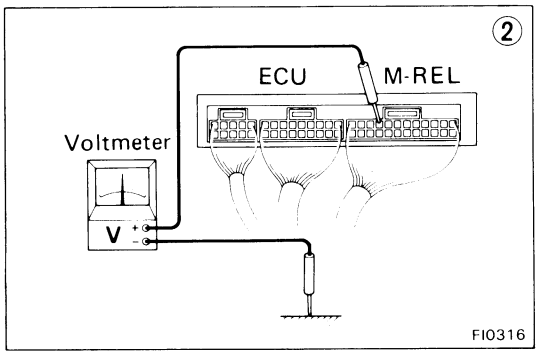

- **M-REL – E1**

① There is no voltage between ECU terminals M-REL and E1. **(IG SW ON)**

↓

② Check that there is voltage between ECU terminal M-REL and body ground. **(IG SW ON)**

NO → Check EFI main relay and wiring harness. → BAD → Replace.

→ OK → Try another ECU.

OK → Check wiring between ECU terminal E1 and body ground.

OK → Try another ECU.

BAD → Repair or replace.

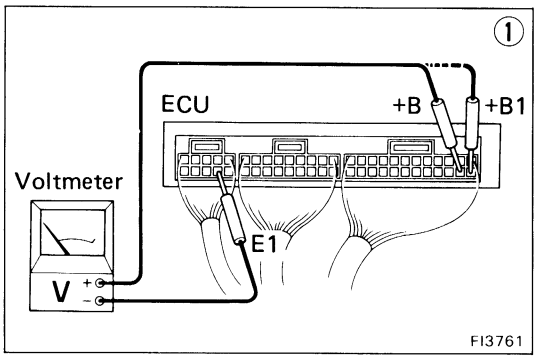

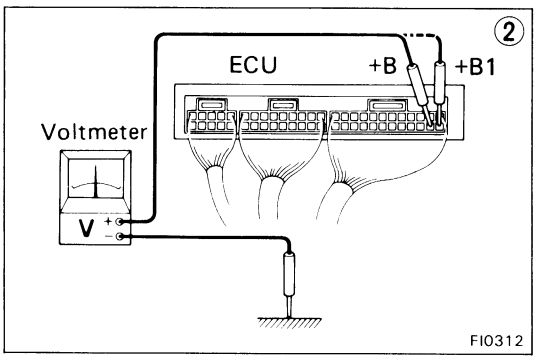

- **+B (+B1) – E1**

① There is no voltage between ECU terminals +B (+B1) and E1. **(IG SW ON)**

↓

② Check that there is voltage between ECU terminal +B (+B1) and body ground. **(IG SW ON)**

- NO → Check fuse, fusible links and wiring harness.
- OK → Check wiring between ECU terminal E1 and body ground.
  - OK → Try another ECU.
  - BAD → Repair or replace.

Check fuse, fusible links and wiring harness.
- BAD → Repair or replace.
- OK ↓

Check EFI main relay. (See page FI-109)
- BAD → Replace.
- OK ↓

Refer to M-REL – E1 trouble section.

No.	Terminals	Trouble	Condition		STD voltage
2	IDL – E2	No voltage	Ignition switch ON	Throttle valve open	10 – 14 V
	VC – E2			–	4 – 6 V
	VTA – E2			Throttle valve fully closed	0.1 – 1.0 V
				Throttle valve fully open	4 – 5 V

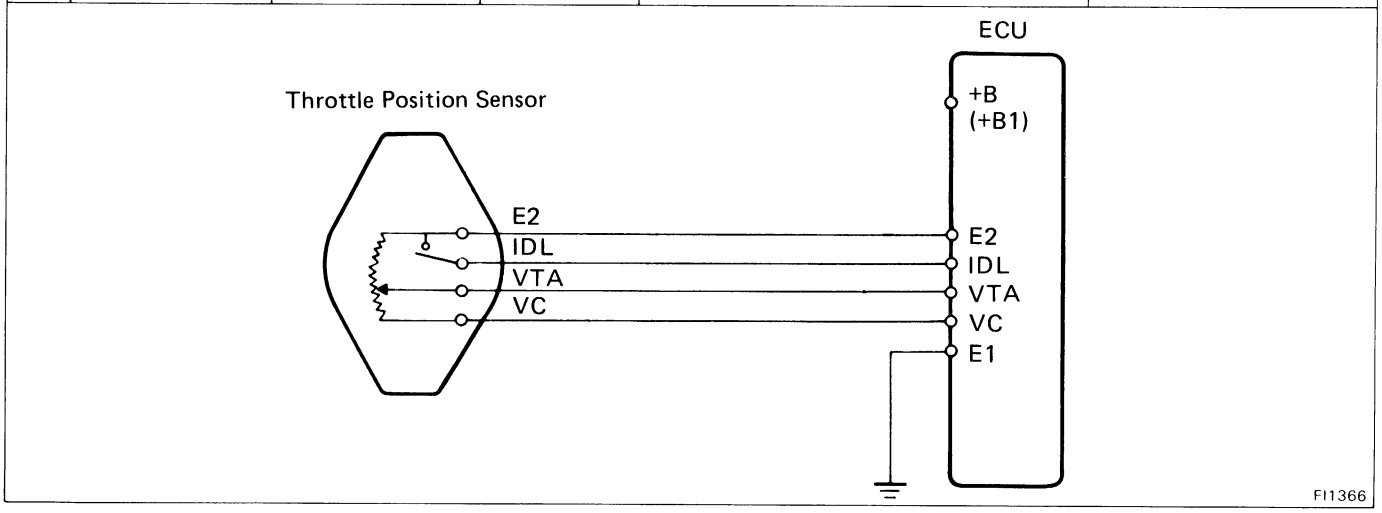

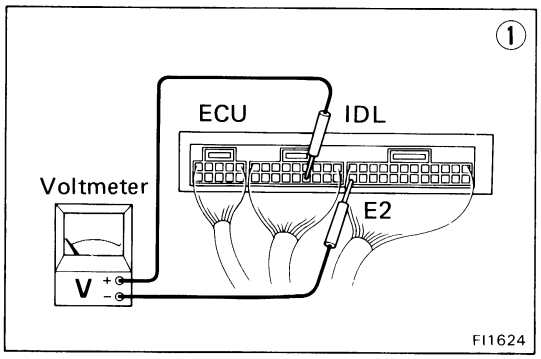

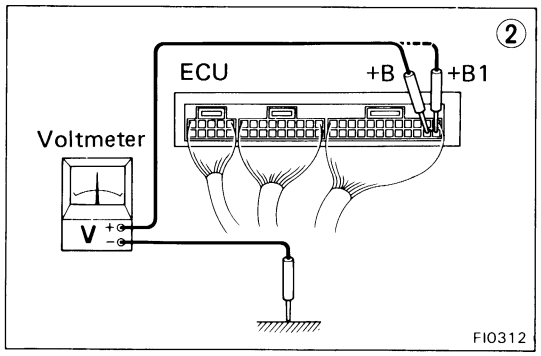

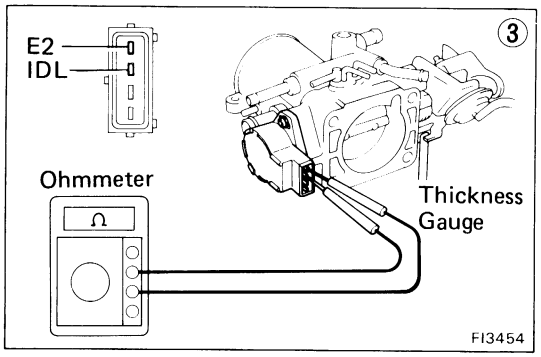

- **IDL – E2**

① There is no voltage between ECU terminals IDL and E2. **(IG SW ON)** (Throttle valve open)

↓

② Check that there is voltage between ECU terminal +B (+B1) and body ground. **(IG SW ON)**

- NO → ③
- OK → Check wiring between ECU terminal E1 and body ground.
  - OK → Try another ECU.
  - BAD → Repair or replace.

③ Refer to No. 1. (See page FI-35)

- BAD → Repair or replace.
- OK → ④ Check throttle position sensor.
  - BAD → Repair or replace throttle position sensor.
  - OK → Check wiring between ECU and throttle position sensor.
    - BAD → Repair or replace.
    - OK → Try another ECU.

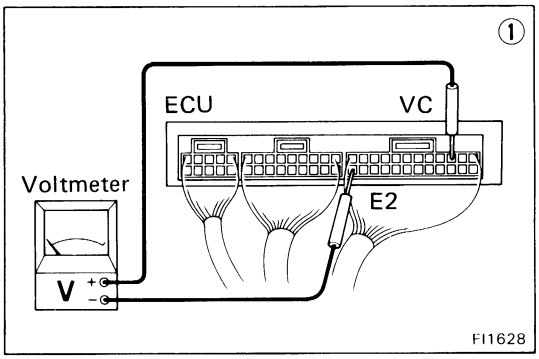

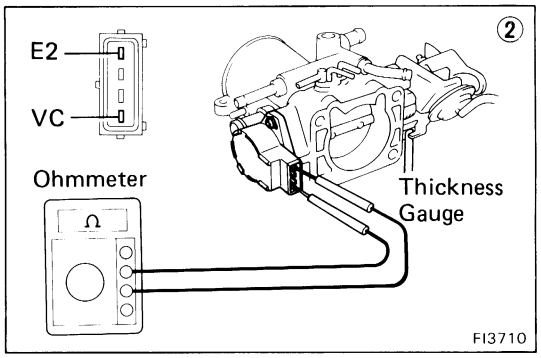

- **VC – E2**

① There is no voltage between ECU terminals VC and E2. **(IG SW ON)**

↓

Check that there is voltage between ECU terminal +B (+B1) and body ground. **(IG SW ON)**

OK → ② Check throttle position sensor. (See page FI-101)

NO → Refer to No. 1. (See page FI-35)

② BAD → Repair or replace.

② OK → Check wiring between ECU and throttle position sensor.

OK → Try another ECU.

BAD → Repair or replace wiring.

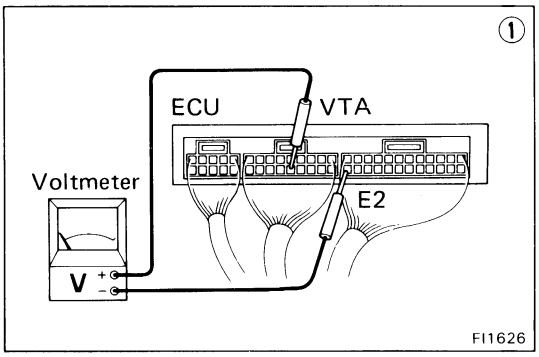

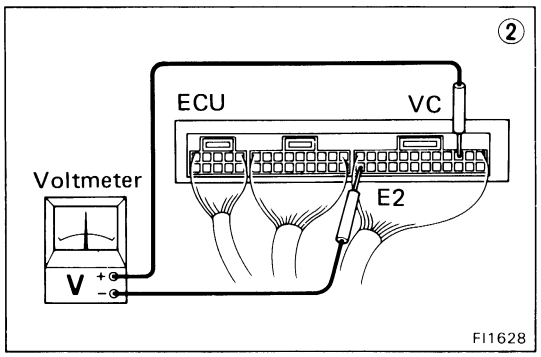

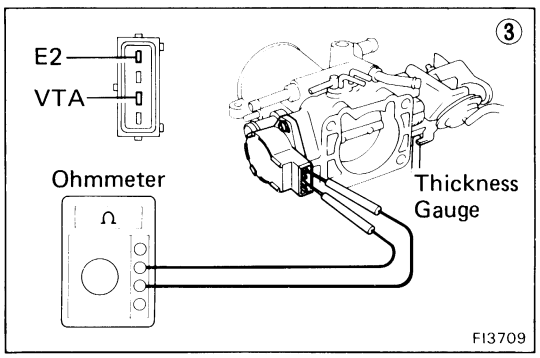

- **VTA – E2**

① There is no specified voltage at ECU terminals VTA and E2. **(IG SW ON)**

↓

② Check that there is voltage between ECU terminal VC and E2. **(IG SW ON)**

NO → Refer to VC – E2 trouble section.

OK → ③ Check throttle position sensor.

③ BAD → Repair or replace.

③ OK → Check wiring between ECU and throttle position sensor.

BAD → Repair or replace.

OK → Try another ECU.

No.	Terminals	Trouble	Condition		STD Voltage
3	VC – E2	No voltage	Ignition SW ON	–	4 – 6 V
	VS – E2			Measuring plate fully closed	3.7 – 4.3 V
	VS – E2			Measuring plate fully open	0.2 – 0.5 V
	VS – E2		Idling	–	2.3 – 2.8 V
	VS – E2		3,000 rpm	–	1.0 – 2.0 V

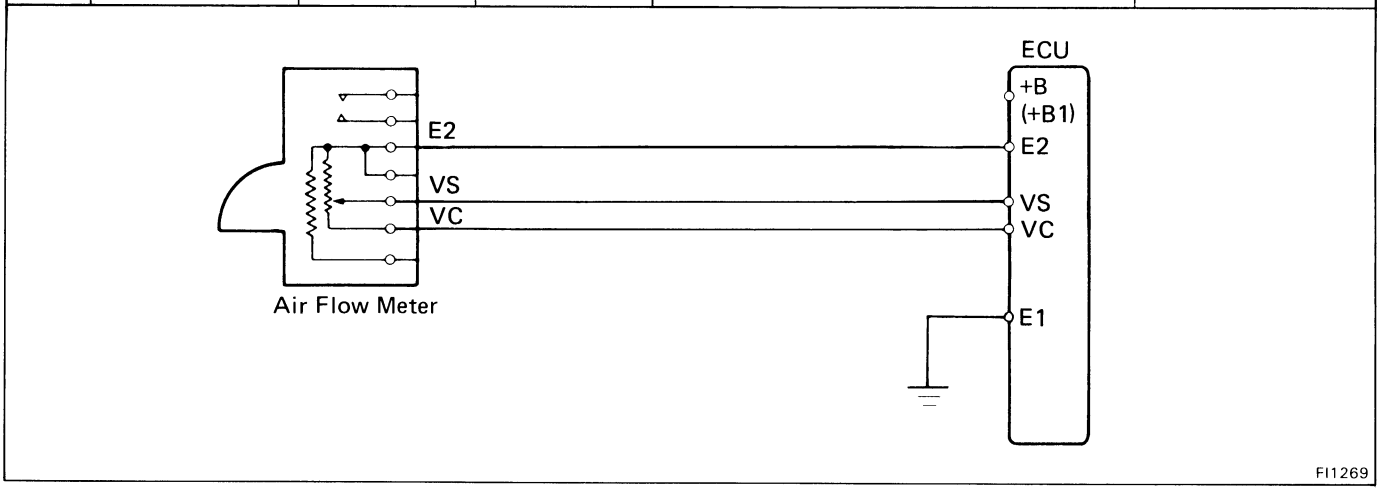

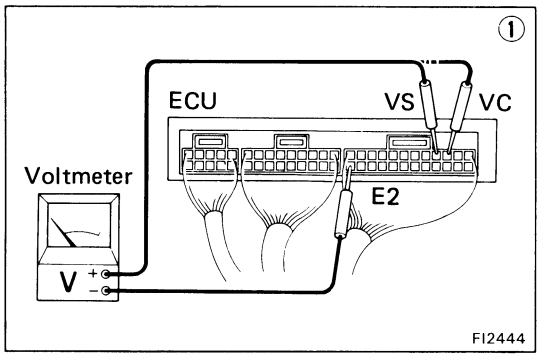

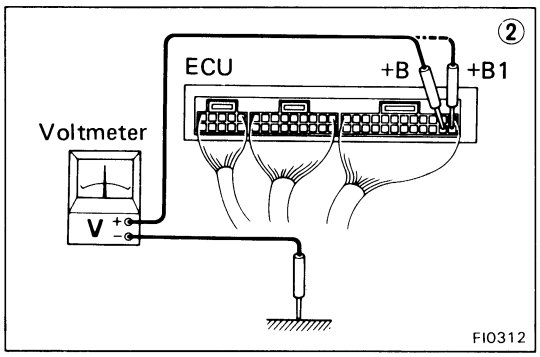

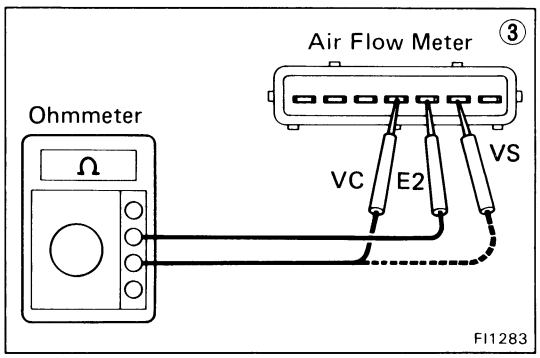

① There is no voltage between ECU terminals VC or VS and E2. **(IG SW ON)**

↓

② Check that there is voltage between ECU terminal +B (+B1) and body ground. **(IG SW ON)**

- NO → Refer to No. 1. (See page FI-35)
- OK ↓

Check wiring between ECU terminal E1 and body ground.

- BAD → Repair or replace.
- OK ↓

③ Check air flow meter. (See page FI-94)

- BAD → Replace air flow meter.
- OK → Check wiring between ECU and air flow meter.
  - BAD → Repair or replace.
  - OK → Try another ECU.

No.	Terminals	Trouble	Condition	STD Voltage
4	No. 10 E01 No. 20 – No. 30 E02	No voltage	Ignition switch ON	10 – 14 V

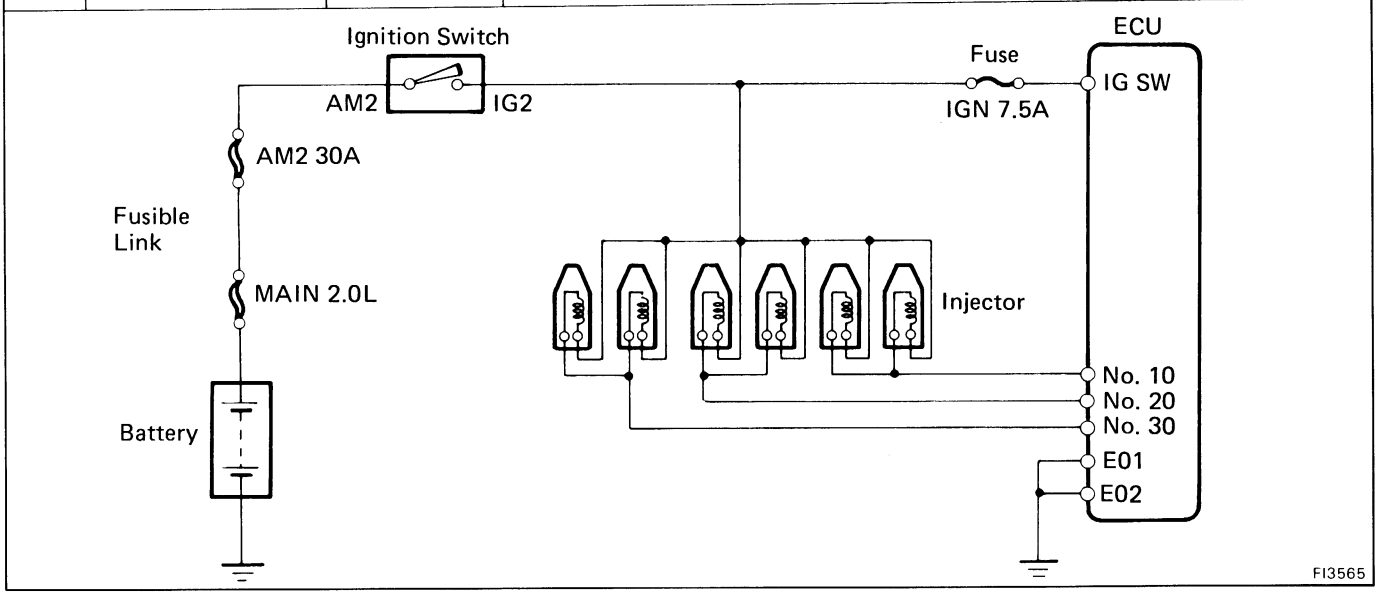

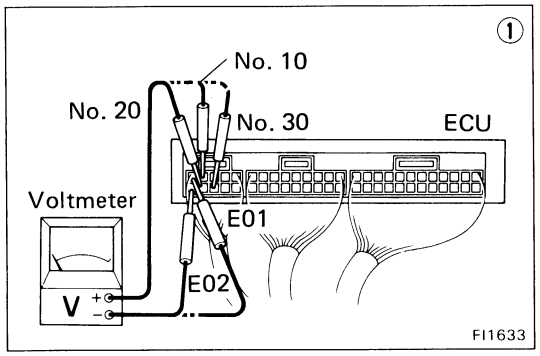

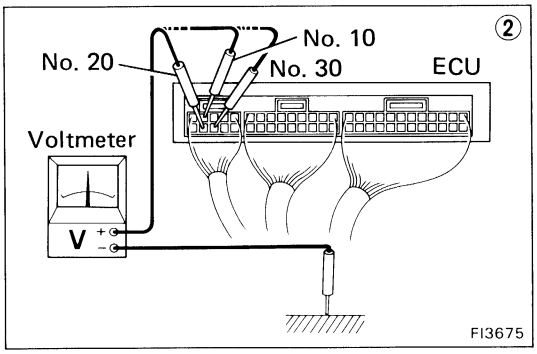

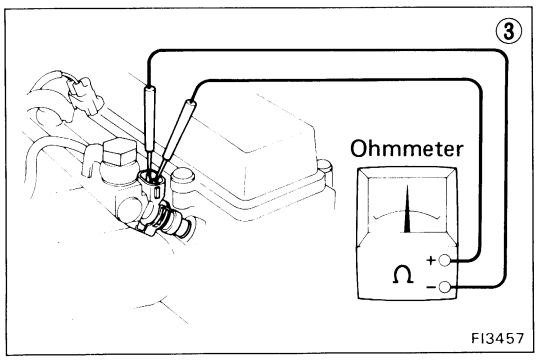

① There is no voltage between ECU terminal No. 10, No. 20 and/or No. 30 and E01 and/or E02. **(IG SW ON)**

↓

② Check that there is voltage between ECU terminal No. 10, No. 20 or No. 30 and body ground.

NO ↓ OK

Check wiring between ECU terminal E01 and/or E02 and body ground.

OK ↓ Try another ECU.

BAD → Repair or replace.

Check fusible links and ignition switch.

BAD → Repair or replace.

OK ↓

③ Check resistance of each injector.
STD resistance: Approx. 13.8 Ω

OK ↓

BAD → Replace injector.

Check wiring between ECU terminal No. 10, No. 20 and/or No. 30 and battery.

BAD → Repair or replace.

No.	Terminals	Trouble	Condition		STD Voltage
5	THA – E2	No voltage	Ignition switch ON	Intake air temperature 20°C (68°F)	1 – 3 V

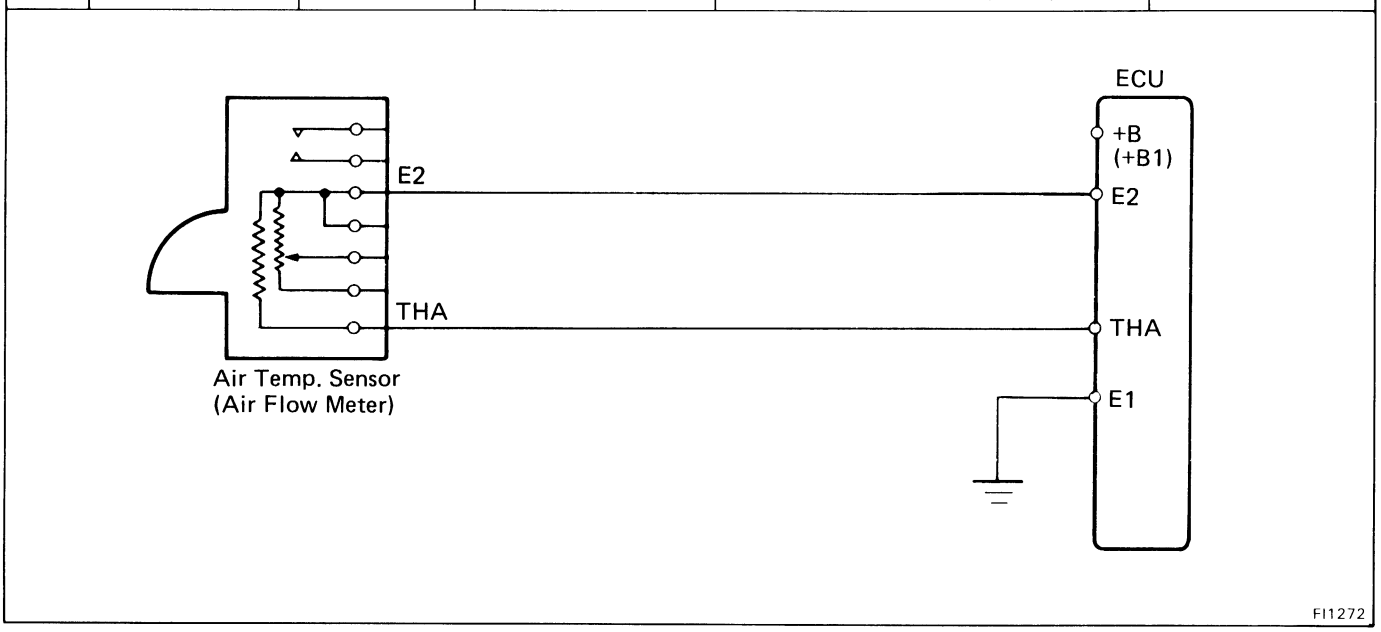

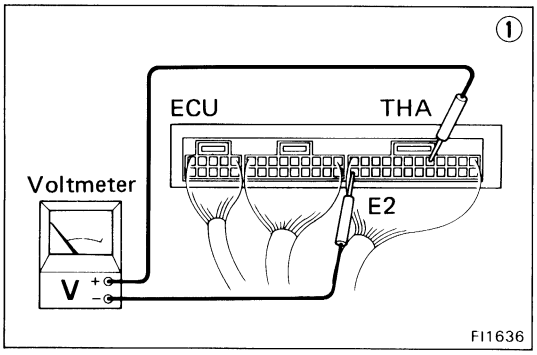

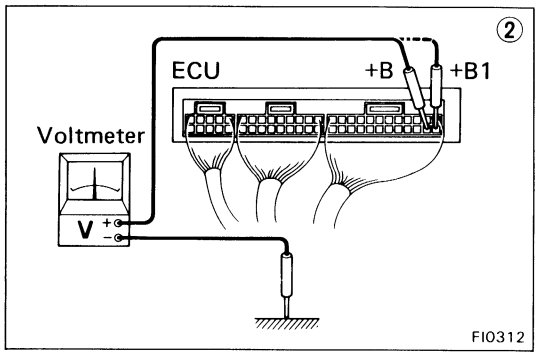

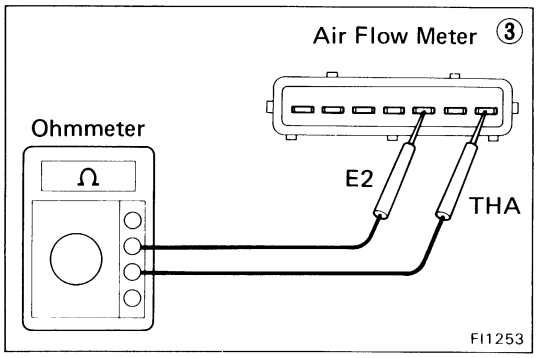

① There is no voltage between ECU terminals THA and E2. **(IG SW ON)**

↓

② Check that there is voltage between ECU terminal +B (+B1) and body ground. **(IG SW ON)**

- NO → Refer to No. 1. (See page FI-35)
- OK ↓

Check wiring between ECU terminal E1 and body ground.

- BAD → Repair or replace.
- OK ↓

③ Check air temp. sensor. (See page FI-94)

- BAD → Replace air flow meter.
- OK ↓

Check wiring between ECU and air temp. sensor.

- BAD → Repair or replace.
- OK → Try another ECU.

No.	Terminals	Trouble	Condition		STD Voltage
6	THW – E2	No voltage	Ignition switch ON	Coolant temperature 80°C (176°F)	0.1 – 1.0 V

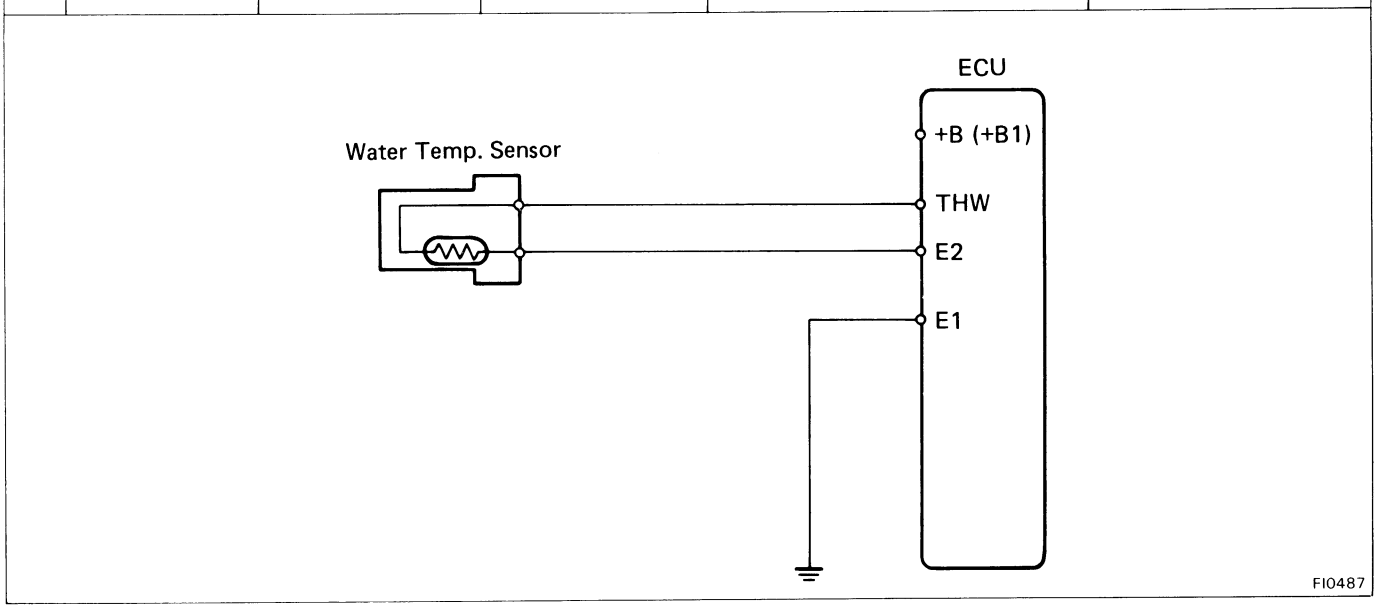

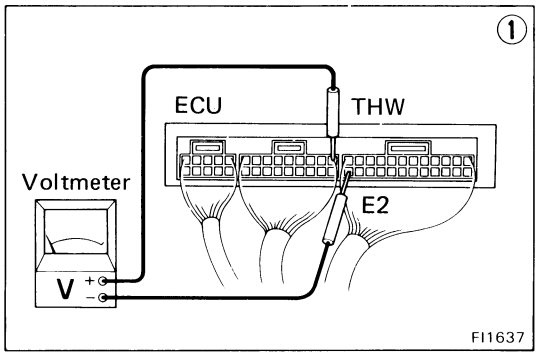

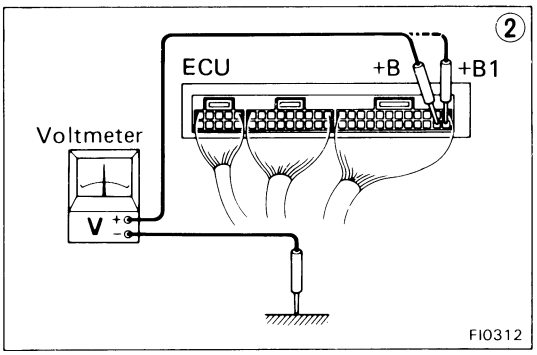

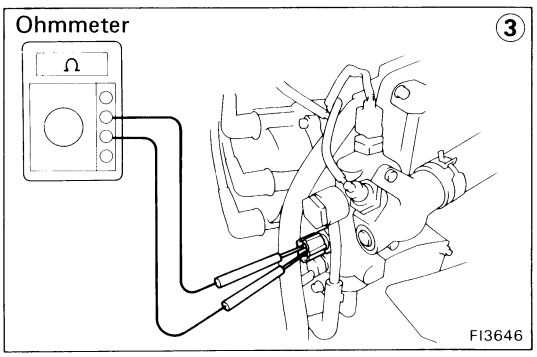

① There is no voltage between ECU terminals THW and E2. **(IG SW ON)**

↓

② Check that there is voltage between ECU terminal +B (+B1) and body ground. **(IG SW ON)**

- NO → Refer to No. 1. (See page FI-35)
- OK ↓

Check wiring between ECU terminal E1 and body ground.

- BAD → Repair or replace.
- OK ↓

③ Check water temp. sensor. (See page FI-113)

- BAD → Replace water temp. sensor.
- OK ↓

Check wiring between ECU and water temp. sensor.

- BAD → Repair or replace.
- OK ↓

Try another ECU.

No.	Terminals	Trouble	Condition	STD Voltage
7	STA – E1	No voltage	Cranking	6 – 14 V

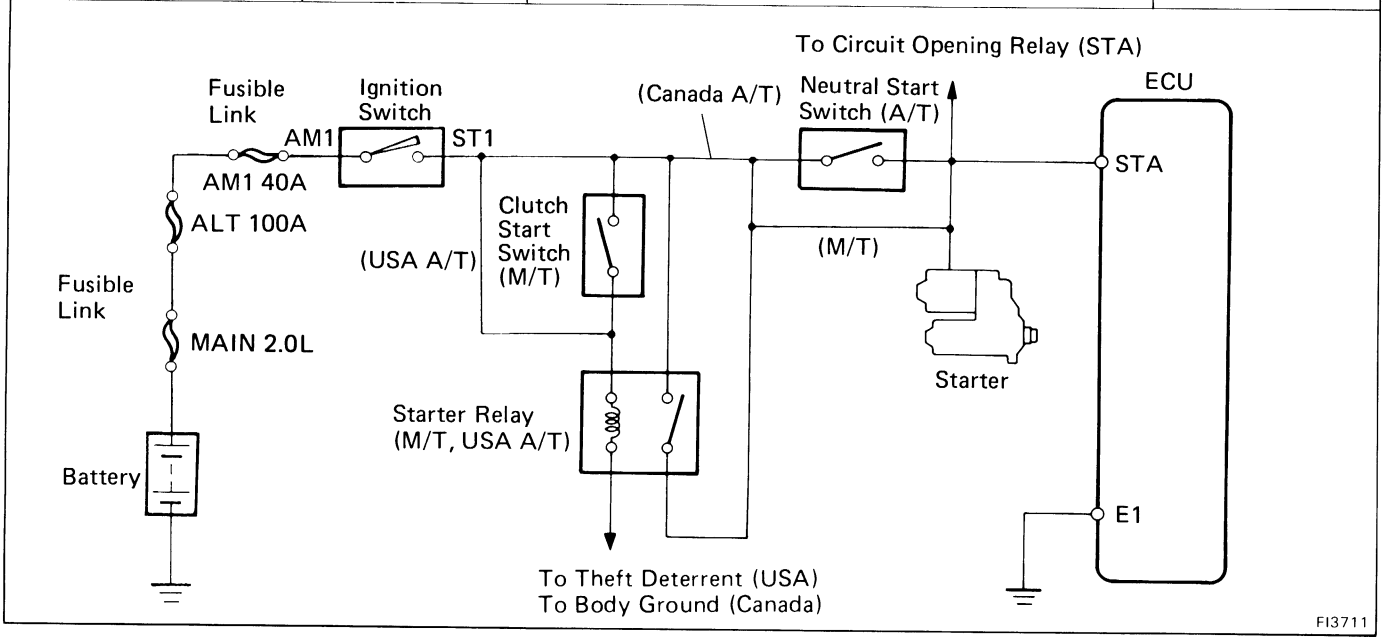

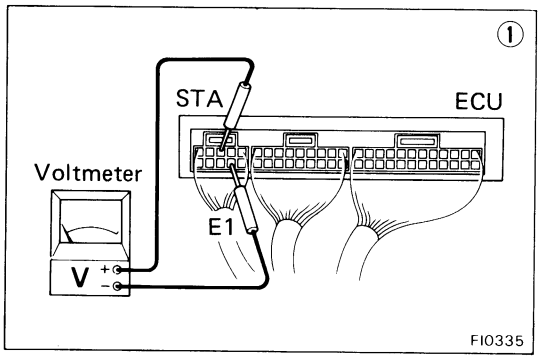

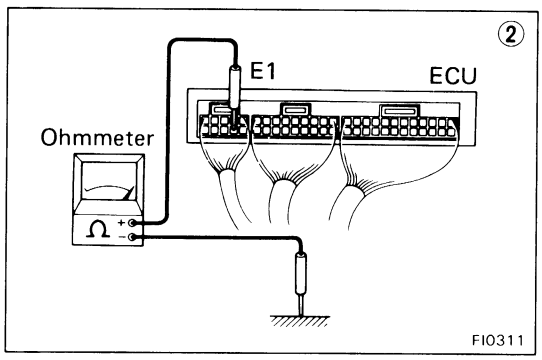

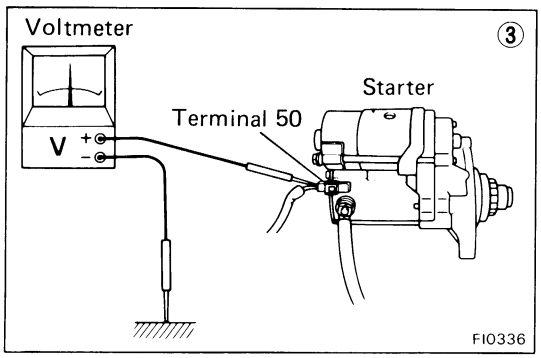

① There is no voltage between ECU terminals STA and E1. **(IG SW START)**

→ Check starter operation.
- OK → Check wiring between ECU terminal STA and ignition switch terminal ST1.
  - BAD → Repair or replace.
  - OK → ② Check wiring between ECU terminal E1 and body ground.
    - OK → Try another ECU.
    - BAD → Repair or replace.
- BAD → Check fusible links, battery, wiring, ignition switch and neutral start switch.
  - BAD → Repair or replace.
  - OK → ③ Check that there is voltage at terminal 50 of starter. **(IG SW START) STD voltage: 6 – 14 V**
    - OK → Check starter.
    - NO → Check wiring between ignition switch terminal ST1 and starter terminal 50.

No.	Terminals	Trouble	Condition	STD Voltage
8	IGT – E1	No voltage	Idling	0.7 – 1.0 V

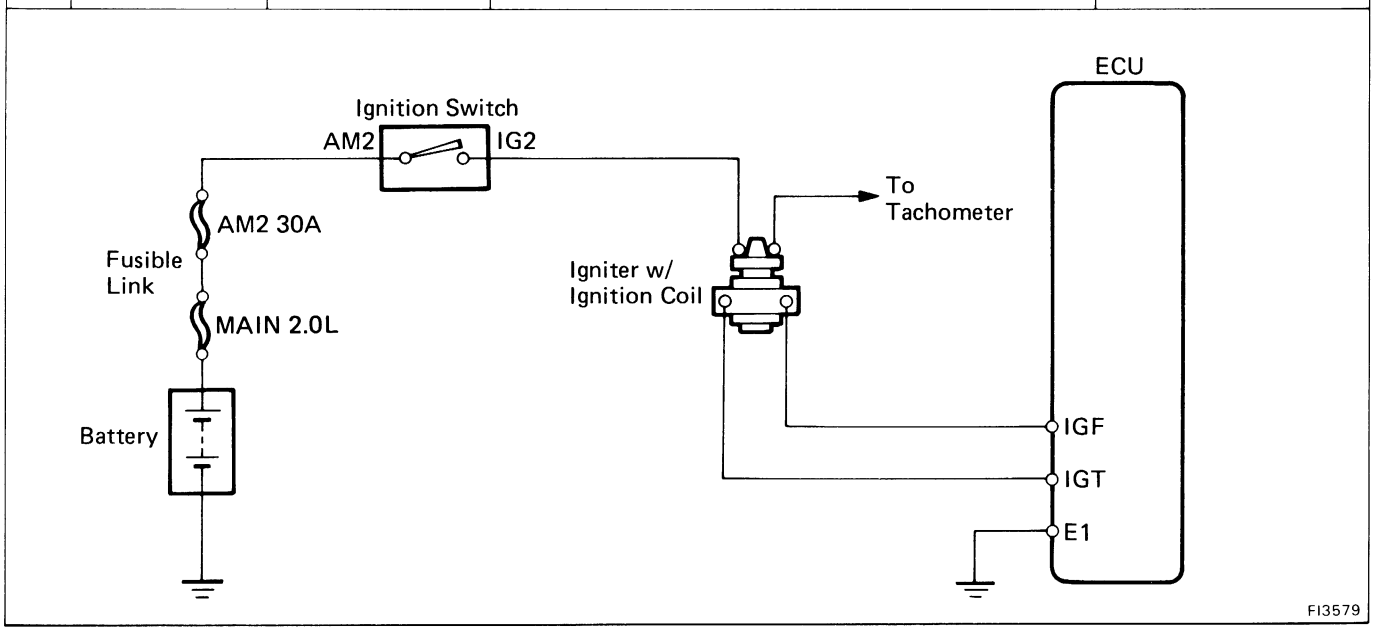

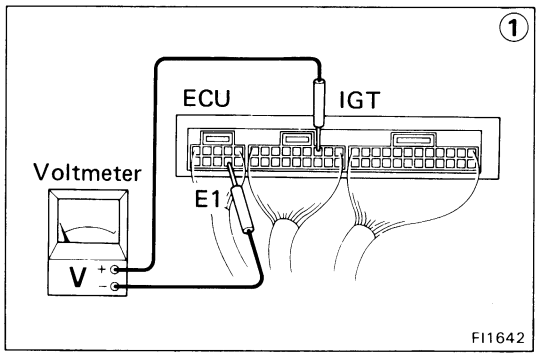

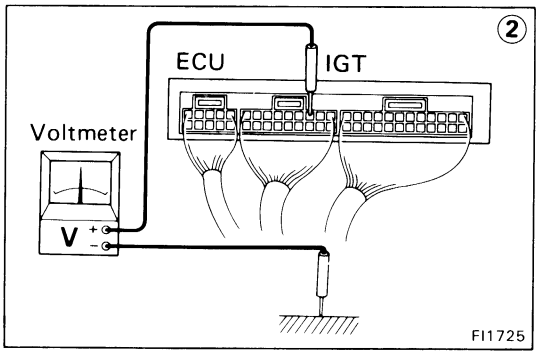

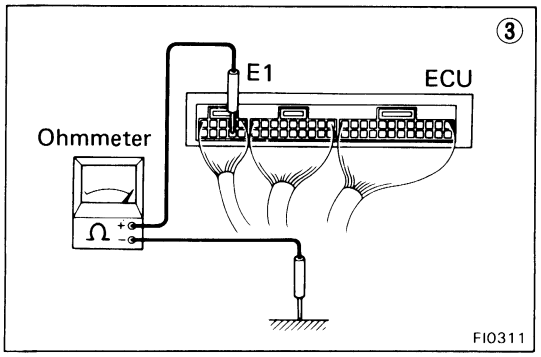

① There is no voltage between ECU terminals IGT and E1. **(Idling)**

↓

② Check that there is voltage between ECU terminal IGT and body ground. **(Idling)**

NO → Check fusible links and ignition switch.

OK ↓

③ Check wiring between ECU terminal E1 and body ground. — BAD → Repair or replace.

OK ↓

Try another ECU.

Check fusible links and ignition switch. — BAD → Repair or replace.

OK ↓

Check distributor. (See page IG-9) — BAD → Repair or replace.

OK ↓

Check wiring between ECU and battery. — BAD → Repair or replace.

OK ↓

Check igniter. — BAD → Repair or replace.

No.	Terminals	Trouble	Condition	STD Voltage
9	ISC1~ISC4 – E1	No voltage	Ignition switch ON	9 – 14 V

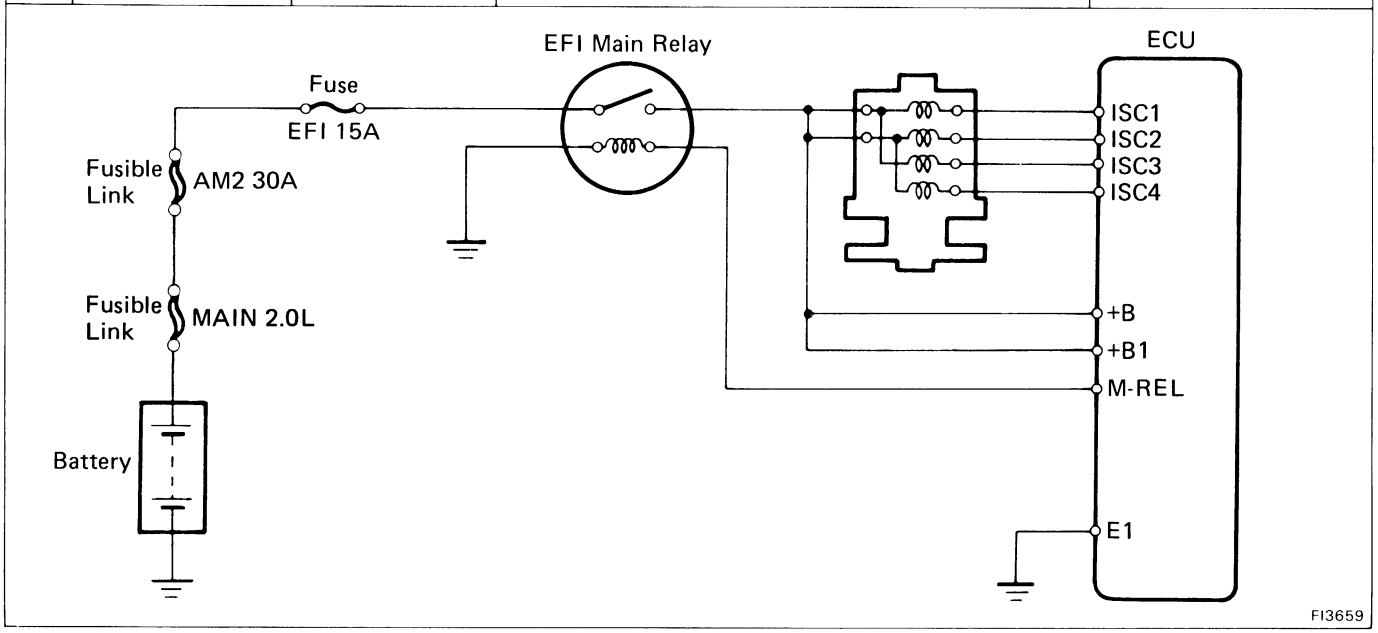

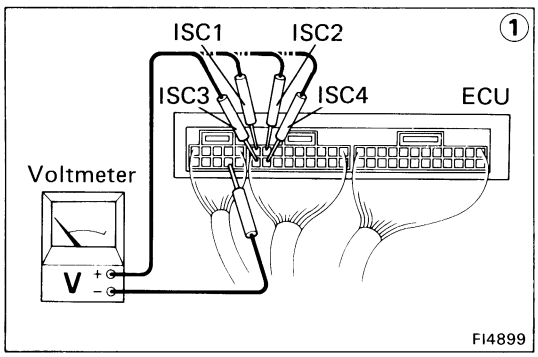

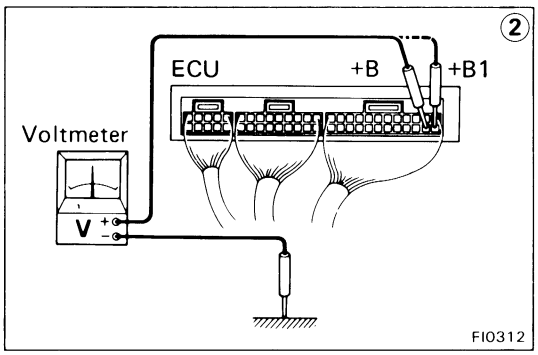

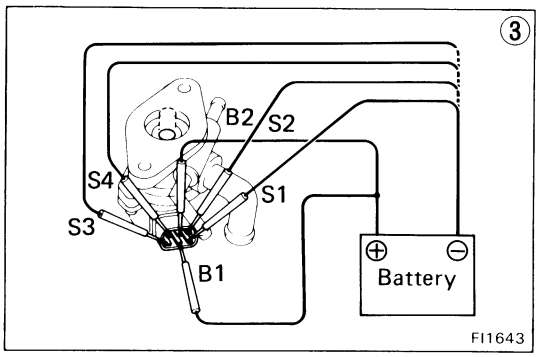

① There is no voltage between ECU terminals ISC1 ~ ISC4 and E1. **(IG SW ON)**

↓

② Check that there is voltage between ECU terminal +B (+B1) and body ground. **(IG SW ON)**

- OK → Check wiring between ECU terminal E1 and body ground.
- NO → Refer to No. 1. (See page FI-35)

Check wiring between ECU terminal E1 and body ground.

- OK → ③ Check ISC valve. (See page FI-106)
- BAD → Repair or replace.

③ Check ISC valve. (See page FI-106)

- BAD → Replace ISC valve.
- OK → Check wiring between ECU and EFI main relay.

Check wiring between ECU and EFI main relay.

- OK → Try another ECU.
- BAD → Repair or replace.

No.	Terminals	Trouble	Condition	STD Voltage
10	W – E1	No voltage	No. trouble ("CHECK ENGINE" warning light off) and engine running	8 – 14 V

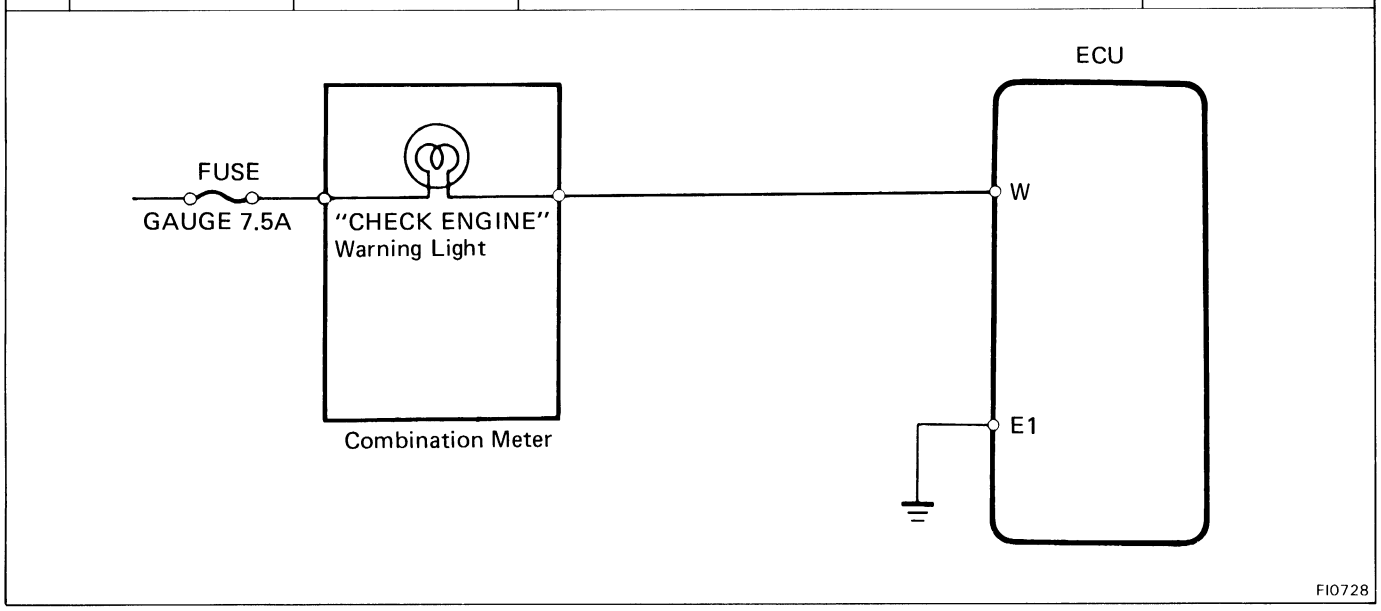

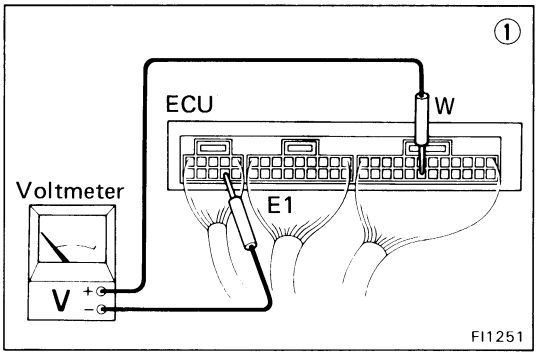

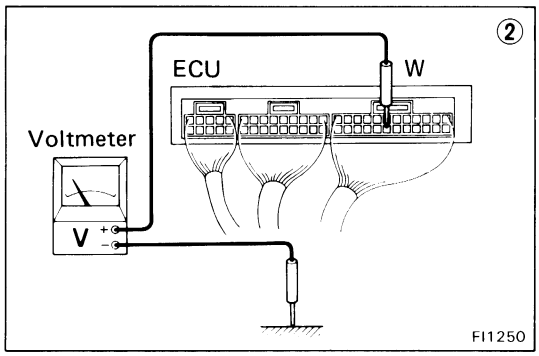

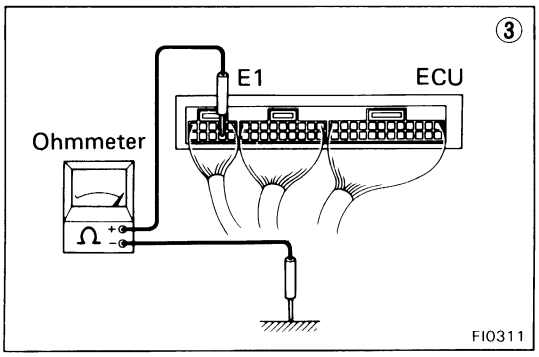

① There is no voltage between ECU terminals W and E1. **(Idling)**

② Check that there is voltage between ECU terminal W and body ground.

- NO → Check GAUGE fuse (7.5A) and "CHECK ENGINE" warning light.
- OK → ③ Check wiring between ECU terminal E1 and body ground.
  - OK → Try another ECU.
  - BAD → Repair or replace.

Check GAUGE fuse (7.5A) and "CHECK ENGINE" warning light.

- OK → Check wiring between ECU terminal W and fuse.
- BAD → Repair or replace.
  - Fuse blows again → Check wiring between ECU terminal W and fuse.

Check wiring between ECU terminal W and fuse.

- BAD → Repair or replace.

No.	Terminals	Trouble	Condition	STD Voltage
11	A/C – E1	No voltage	Air conditioning ON	10 – 14 V

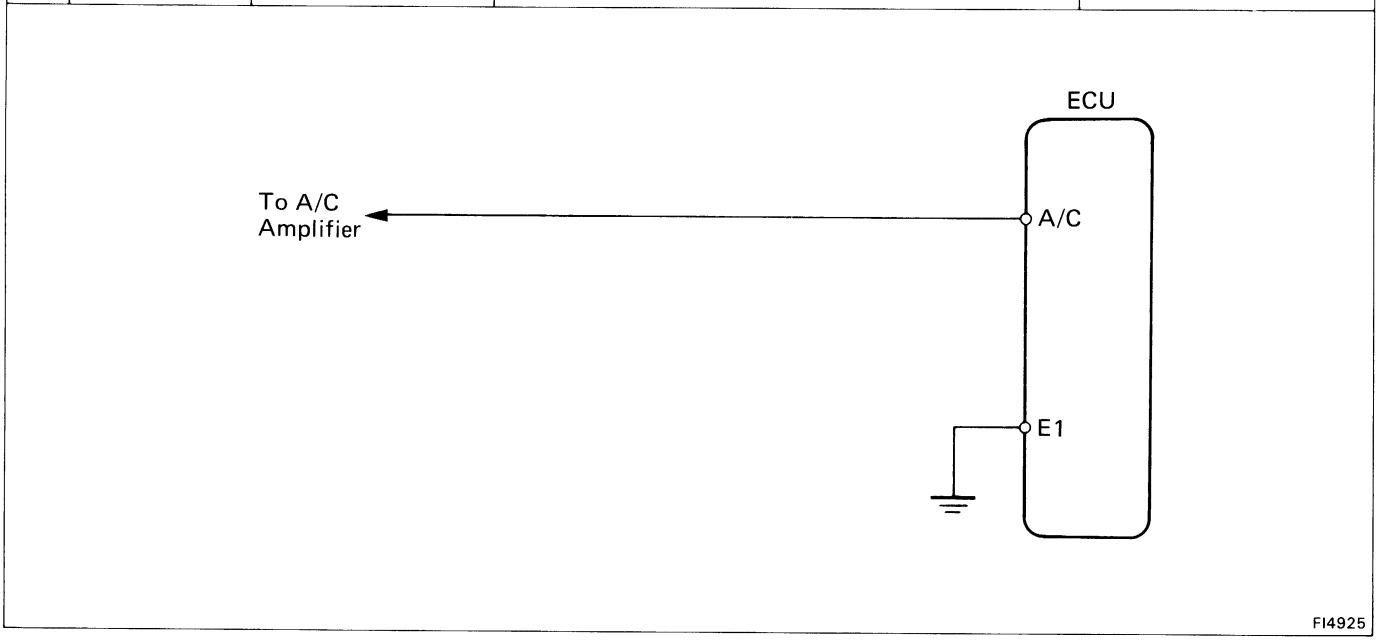

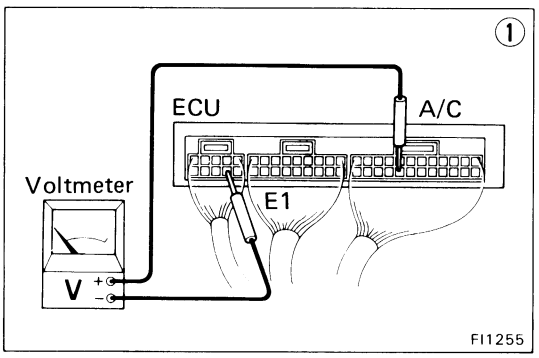

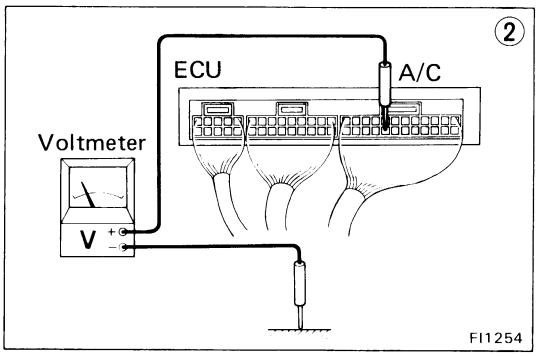

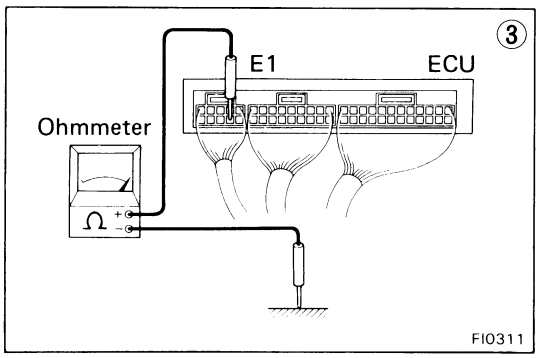

1. There is no voltage between ECU terminals A/C and E1. **(Air conditioning ON)**
2. Check that there is voltage between ECU terminal A/C and body ground.
   - NO → Check that there is voltage between amplifier terminal and body ground.
   - OK → 3. Check wiring between ECU terminal E1 and body ground.
     - OK → Try another ECU.
     - BAD → Repair or replace.
- Check that there is voltage between amplifier terminal and body ground.
  - BAD → Repair or replace.
  - OK → Check wiring between amplifier and ECU terminal A/C.
    - BAD → Repair or replace.

California vehicles only

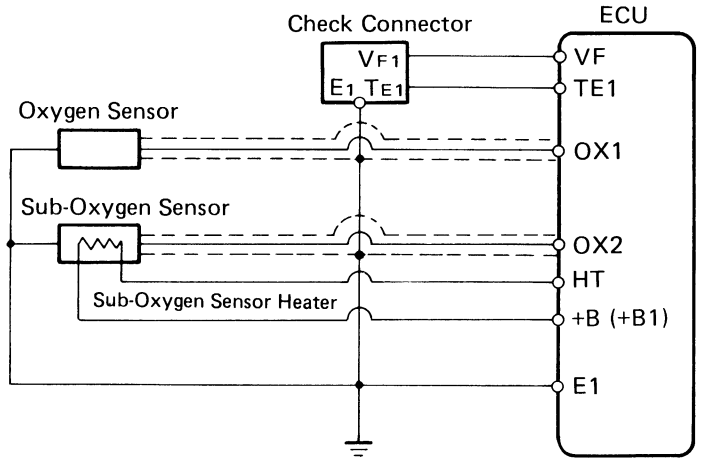

FI3383

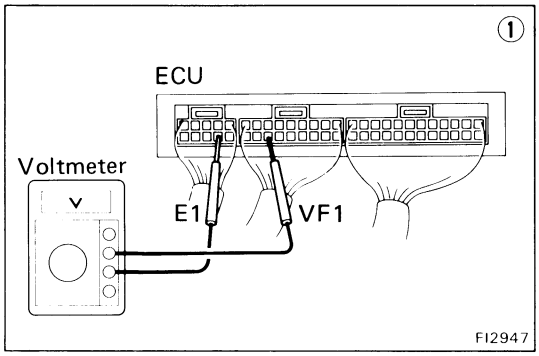

FI2947

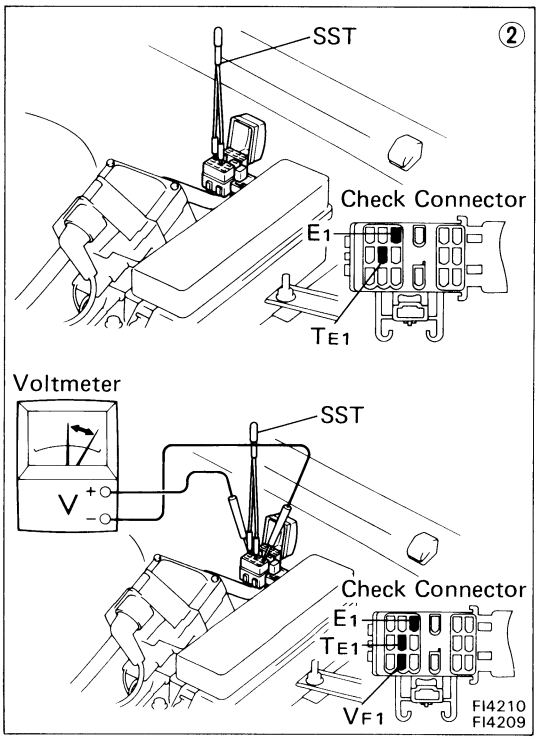

FI4210
FI4209

① There is no voltage between ECU terminals VF1 and E1.

↓

Check that there is specified voltage between ECU terminal VF1 and body ground.

- NO → Check for suction of air into exhaust system.
- OK ↓ Check wiring between ECU terminal E1 and body ground.
  - OK ↓ Try another ECU.
  - BAD → Repair or replace.

↓

Check for suction of air into exhaust system. — BAD → Repair air suction.

↓ OK

Check for air leak from air intake system. — BAD → Repair air leak.

↓ OK

Check spark plugs. — BAD → Repair or replace.

↓ OK

Check distributor and ignition system. — BAD → Repair or replace.

↓ OK

Check fuel pressure. — BAD → Repair or replace.

↓ OK

Check injectors. — BAD → Repair or replace.

↓ OK

Check cold start injector. * — BAD → Repair or replace.

↓ OK

Check air flow meter. — BAD → Repair or replace.

↓ OK

② Check operation of oxygen sensors. — OK → System normal.

↓ BAD

Check wiring between oxygen sensors and ECU connectors. — BAD → Repair wiring.

↓ OK

Replace oxygen sensors.

* Rich malfunction only

California vehicles only

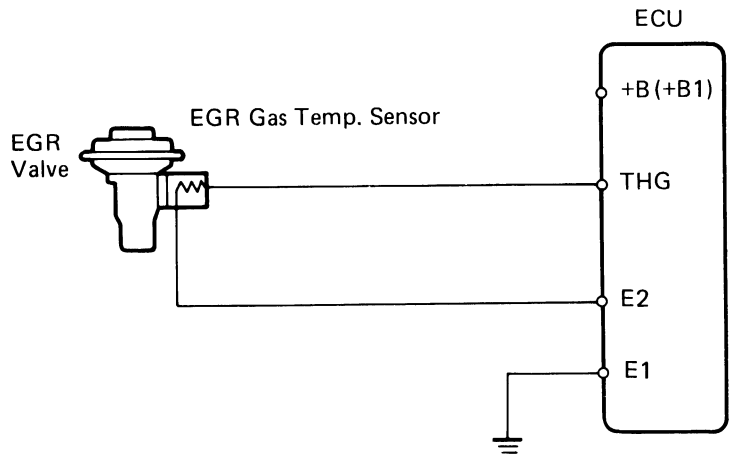

FI2680

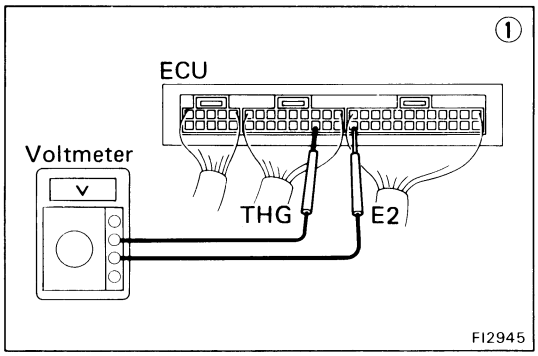

FI2945

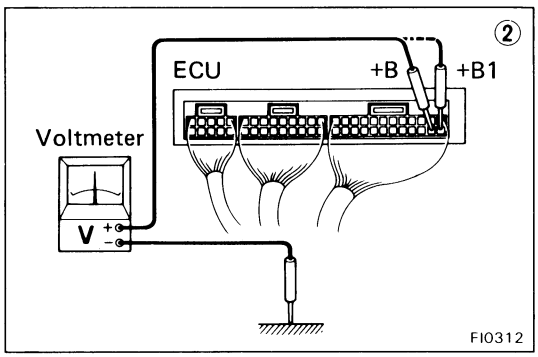

FI0312

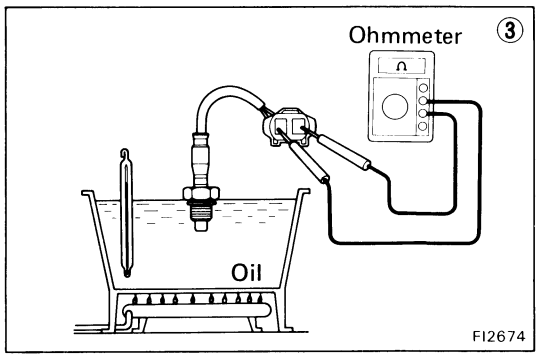

FI2674

① There is voltage between ECU terminals THG and E2. **(IG SW ON)**

↓

② Check that there is voltage between ECU terminal +B (+B1) and body ground. **(IG SW ON)**

- NO → Refer to No. 1. (See page FI-35)
- OK ↓

Check wiring between ECU terminal E1 and body ground.

- BAD → Repair or replace.
- OK ↓

Check EGR system.

- BAD → Repair or replace.
- OK ↓

③ Check EGR gas temp. sensor. (See page FI-118)

- BAD → Replace EGR gas temp. sensor.
- OK → Check wiring between ECU and EGR gas temp. sensor.
  - OK → Try another ECU.
  - BAD → Repair or replace.

TROUBLESHOOTING WITH VOLT/OHMMETER (7M-GTE)

HINT: The following troubleshooting procedures are designed for inspection of each separate system, therefore the procedure may vary somewhat. However, troubleshooting should be performed referring to the inspection methods described in this manual.

Before beginning inspection, it is best to first make a simple check of the fuses, fusible links and condition of the connectors.

The following troubleshooting procedures are based on the supposition that the trouble lies in either a short or open circuit in a component outside the computer or a short circuit within the computer.

If engine trouble occurs even though proper operating voltage is detected in the computer connector, then it can be assumed the computer is faulty and should be replaced.

LOCATION OF FUSES AND FUSIBLE LINKS

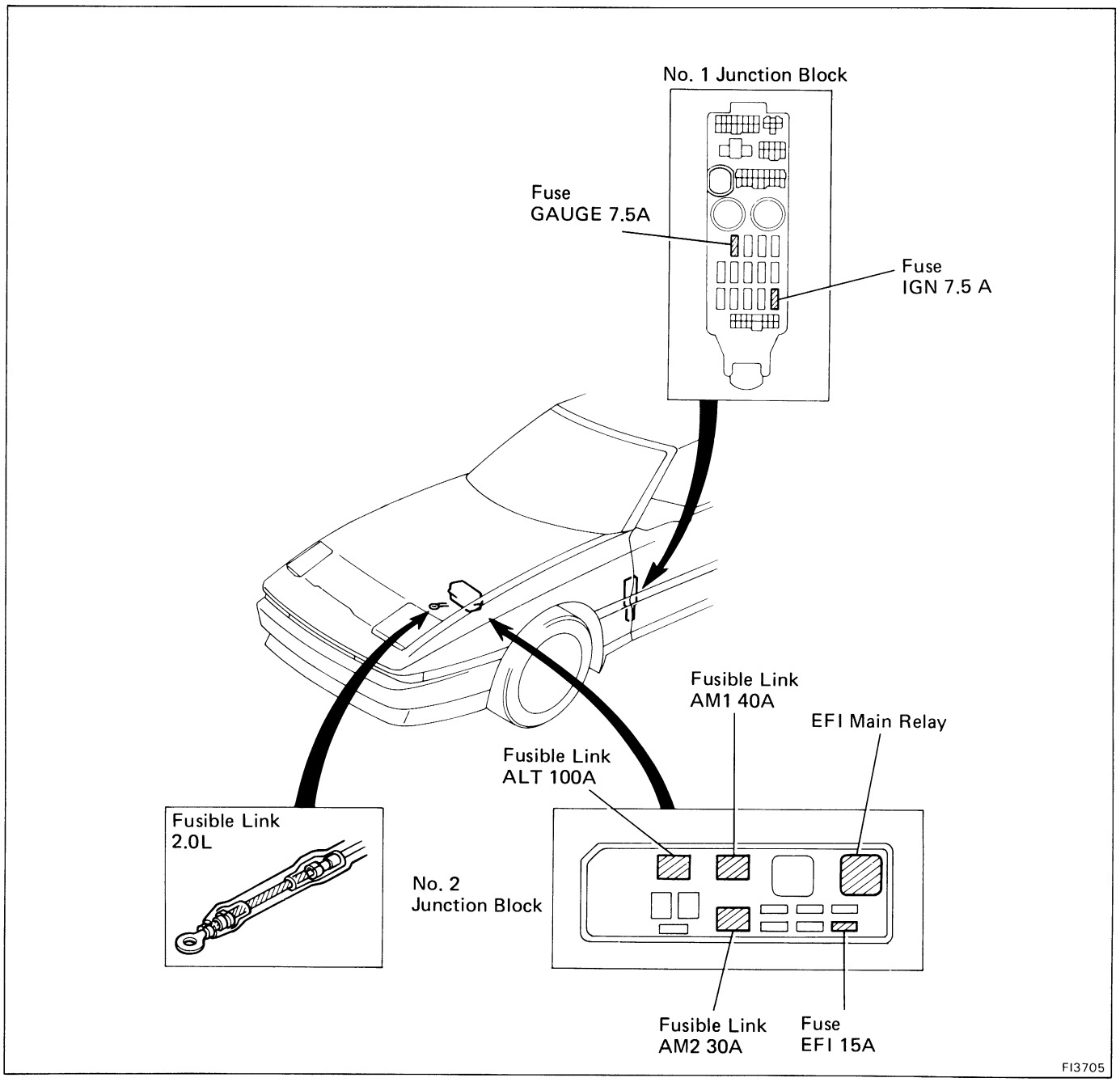

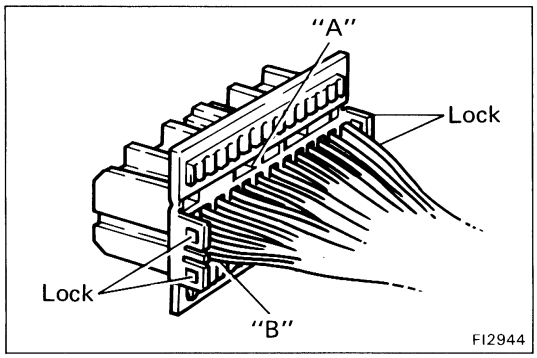

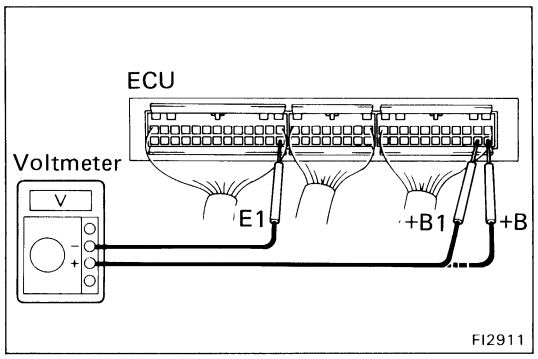

EFI SYSTEM CHECK PROCEDURE

PREPARATION

(a) Disconnect the connectors from the ECU.

(b) Remove the locks as shown in the illustration so that the tester probe(s) can easily come in.

NOTICE: Pay attention to sections "A" and "B" in the illustration which can be easily broken.

(c) Reconnect the connectors to the ECU.

HINT:

- Perform all voltage measurements with the connectors connected.
- Verify that the battery voltage is 11 V or more when the ignition switch is in "ON" position.

Using a voltmeter with high impedance (10 kΩ/V minimum), measure the voltage at each terminal of the wiring connectors.

Terminals of ECU

Symbol	Terminal Name	Symbol	Terminal Name	Symbol	Terminal Name
E01	POWER GROUND	G2	CAM POSITION SENSOR	A/C	A/C COMPRESSOR
E02	POWER GROUND	G1	CAM POSITION SENSOR	*2 LP	HEADLIGHT RELAY
No. 10	INJECTOR (No. 1 and 6)	NE	CAM POSITION SENSOR	SPD	SPEED SENSOR
No. 30	INJECTOR (No. 4 and 5)	E1	COMPUTER GROUND	*3 ECT	ECT COMPUTER
No. 20	INJECTOR (No. 2 and 3)	VF	CHECK CONNECTOR	*2 DFG	DEFOGGER RELAY
STJ	COLD START INJECTOR	G⊖	CAM POSITION SENSOR	L1	TEMS COMPUTER
HT	OXYGEN SENSOR HEATER	OIL	OIL PRESSURE SWITCH	FC	CIRCUIT OPENING RELAY
–	–	TE1	CHECK CONNECTOR	L2	TEMS ECU COMPUTER
VSV2	VSV (FPU)	OX	OXYGEN SENSOR	FP	FUEL PUMP RELAY
–	–	–	–	L3	TEMS COMPUTER
EGR	VSV (EGR)	KNK1	KNOCK SENSOR	W	WARNING LIGHT
–	–	KNK2	KNOCK SENSOR	TIL	TURBO INDICATOR
ISC1	ISC MOTOR NO. 1 COIL	THW	WATER TEMP. SENSOR	M-REL	EFI MAIN RELAY (COIL)
IGT	IGNITER	IDL	THROTTLE POSITION SENSOR	–	–
ISC2	ISC MOTOR NO. 2 COIL	THA	AIR TEMP. SENSOR	–	–
IGDA	IGNITER	VTA	THROTTLE POSITION SENSOR	–	–
ISC3	ISC MOTOR NO. 3 COIL	KS	AIR FLOW METER	IG SW	IGNITION SWITCH
IGDB	IGNITER	–	–	+B1	EFI MAIN RELAY
ISC4	ISC MOTOR NO. 4 COIL	VC	AIR FLOW METER THROTTLE POSITION SENSOR	BATT	BATTERY
–	–	E2	SENSOR GROUND	+B	EFI MAIN RELAY
IGF	IGNITER	STA	STARTER SWITCH		
*1 THG	EGR GAS TEMP. SENSOR	N/C (NSW)	CLUTCH SWITCH (M/T) NEUTRAL START SWITCH (A/T)		

*1 California vehicles only
*2 M/T only
*3 A/T only

ECU Terminals

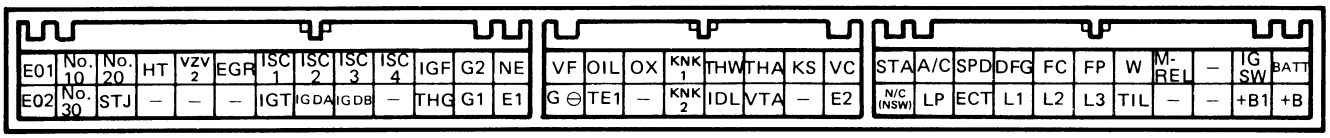

FI2796

Voltage at ECU Wiring Connectors

No.	Terminals	Condition		STD Voltage	See Page
1	BATT – E1	–		10 – 14	FI-52
	IG SW – E1	Ignition SW ON		10 – 14	FI-53
	M-REL – E1				
	+B (+B1) – E1				FI-54
2	IDL – E2	Ignition SW ON	Throttle valve open	4 – 6	FI-55
	VC – E2		–	4 – 6	FI-56
	VTA – E2		Throttle valve fully closed	0.1 – 1.0	
			Throttle valve fully open	3.2 – 4.2	
3	KS – Body ground	Ignition SW ON		4 – 6	FI-57
		Cranking or running		2 – 4	
	VC – Body ground	Ignition SW ON		4 – 6	FI-58
4	No. 10 – E01 No. 20 – No. 30 – E02	Ignition SW ON		10 – 14	FI-59
5	THA – E2	Ignition SW ON	Intake air temperature 20°C (68°F)	1 – 3	FI-60
6	THW – E2	Ignition SW ON	Coolant temperature 80°C (176°F)	0.1 – 1.0	FI-61
7	STA – E1	Cranking		6 – 14	FI-62
8	IGT – E1	Idling		0.7 – 1.0	FI-63
9	IGDA IGDB – E1	Idling		1 – 3	FI-64
10	ISC1 ~ ISC4 – E1	Ignition SW ON		9 – 14	FI-65
11	W – E1	No trouble ("CHECK ENGINE" warning light off) and engine running		8 – 14	FI-66
12	A/C – E1	Air conditioning ON		10 – 14	FI-67

ECU Terminals

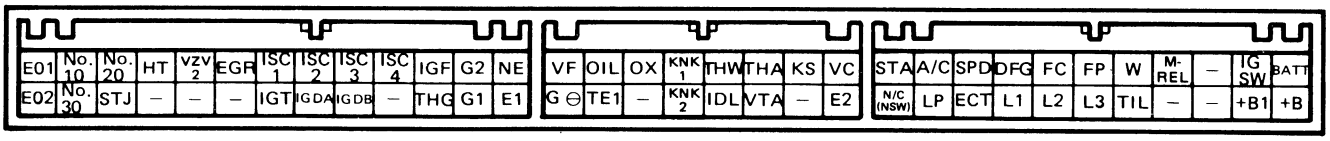

FI2796

No.	Terminals	Trouble	Condition	STD Voltage
1	BATT – E1	No voltage	—	10 – 14 V
	IG SW – E1	No voltage	Ignition switch ON	10 – 14 V
	M-REL – E1	No voltage	Ignition switch ON	10 – 14 V
	+B(+B1) – E1	No voltage	Ignition switch ON	10 – 14 V

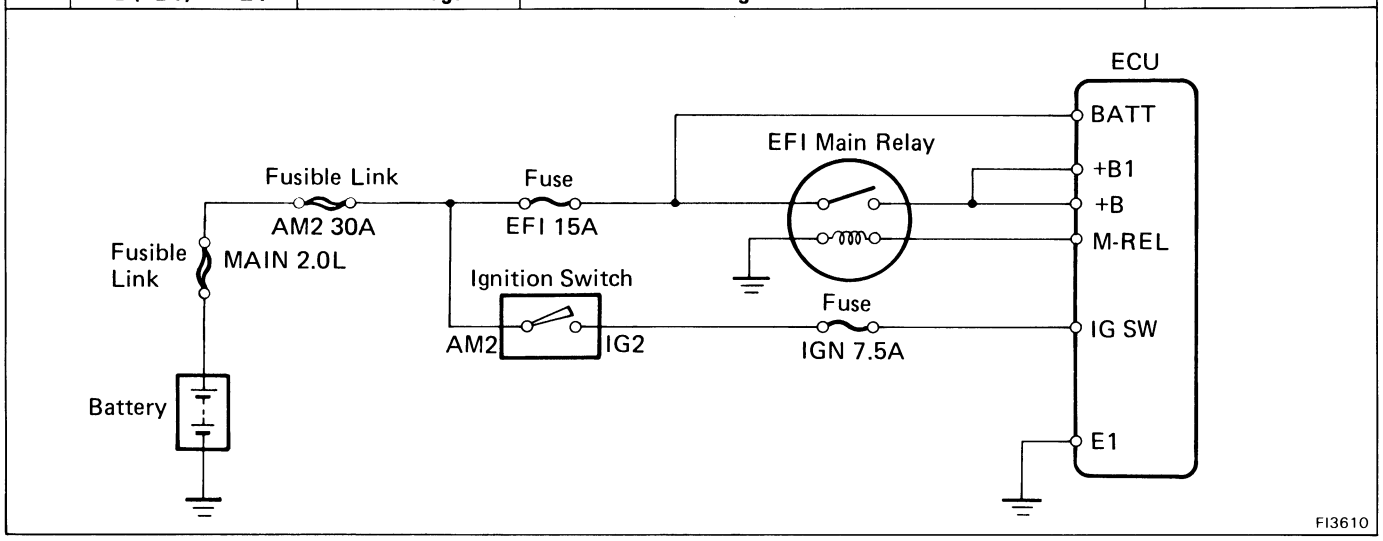

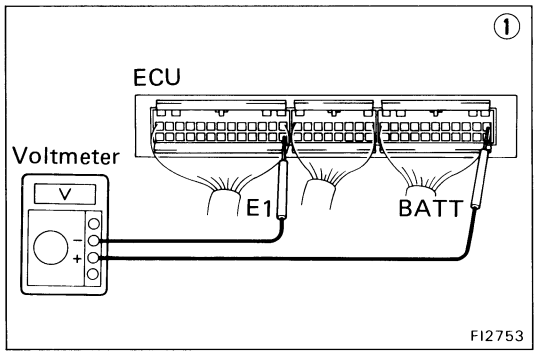

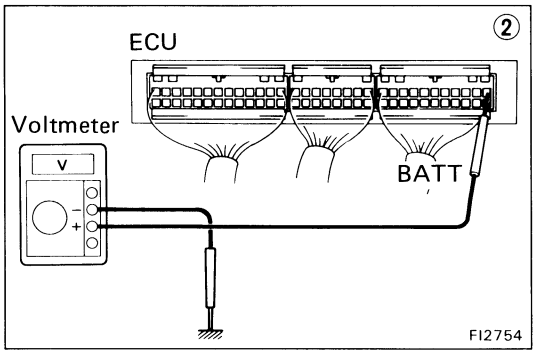

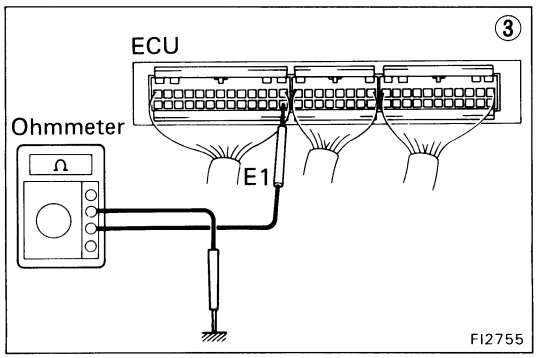

- **BATT – E1**

① There is no voltage between ECU terminals BATT and E1.

↓

② Check that there is voltage between ECU terminal BATT and body ground.

NO → Check fuse and fusible links.

OK ↓

③ Check wiring between ECU terminal E1 and body ground.

OK → Try another ECU.

BAD → Repair or replace.

Check fuse and fusible links.

BAD → Replace.

OK ↓

Check wiring between ECU terminal and battery.

BAD → Repair or replace.

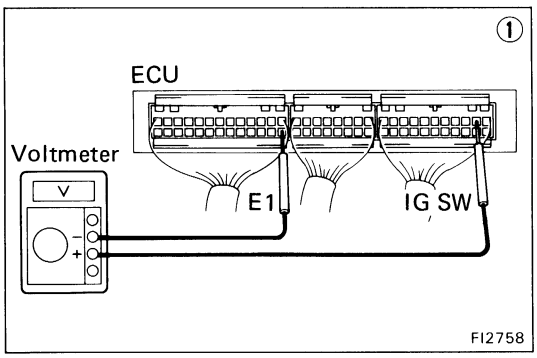

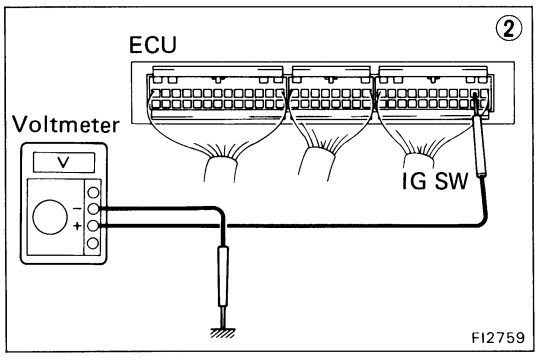

- **IG SW – E1**

① There is no voltage between ECU terminals IG SW and E1. **(IG SW ON)**

↓

② Check that there is voltage between ECU terminal IG SW and body ground. **(IG SW ON)**

- NO → Check fuse, fusible links and ignition switch. → BAD → Repair or replace.
- OK → Check wiring between ECU terminal E1 and body ground.
  - OK → Try another ECU.
  - BAD → Repair or replace.

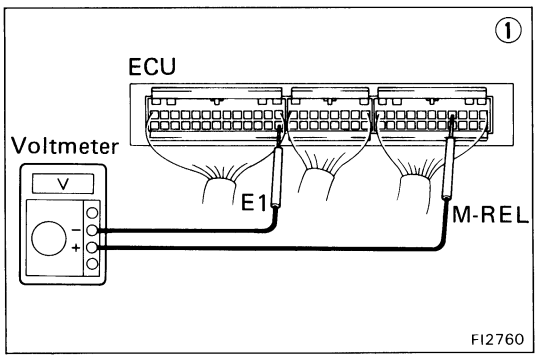

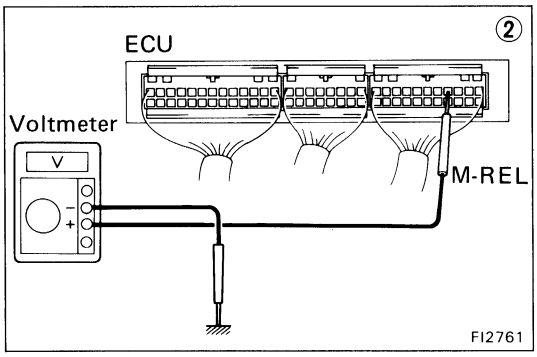

- **M-REL – E1**

① There is no voltage between ECU terminals M-REL and E1. **(IG SW ON)**

↓

② Check that there is voltage between ECU terminal M-REL and body ground. **(IG SW ON)**

- NO → Check EFI main relay and wiring harness. → BAD → Replace.
  - OK → Try another ECU.
- OK → Check wiring between ECU terminal E1 and body ground.
  - OK → Try another ECU.
  - BAD → Repair or replace.

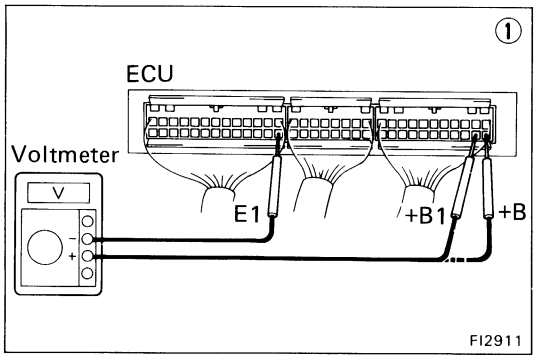

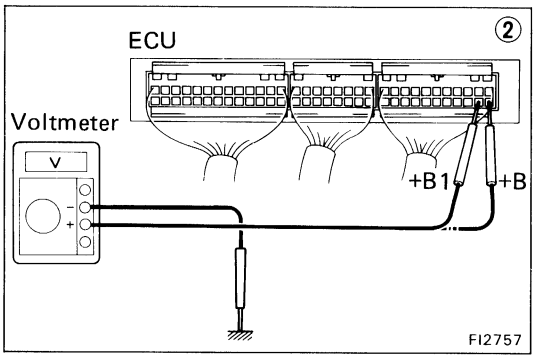

- **+B (+B1) – E1**

① There is no voltage between ECU terminals +B (+B1) and E1. **(IG SW ON)**

↓

② Check that there is voltage between ECU terminal +B (+B1) and body ground. **(IG SW ON)**

- NO → Check fuse, fusible links and wiring harness.
- OK → Check wiring between ECU terminal E1 and body ground.
  - OK → Try another ECU.
  - BAD → Repair or replace.

Check fuse, fusible links and wiring harness.
- BAD → Repair or replace.
- OK ↓

Check EFI main relay. (See page FI-109)
- BAD → Replace.
- OK ↓

Refer to M-REL – E1 trouble section.

No.	Terminals	Trouble	Condition		STD voltage
2	IDL – E2	No voltage	Ignition switch ON	Throttle valve open	4 – 6 V
	VC – E2			–	4 – 6 V
				Throttle valve fully closed	0.1 – 1.0 V
	VTA – E2			Throttle valve fully open	3.2 – 4.2 V

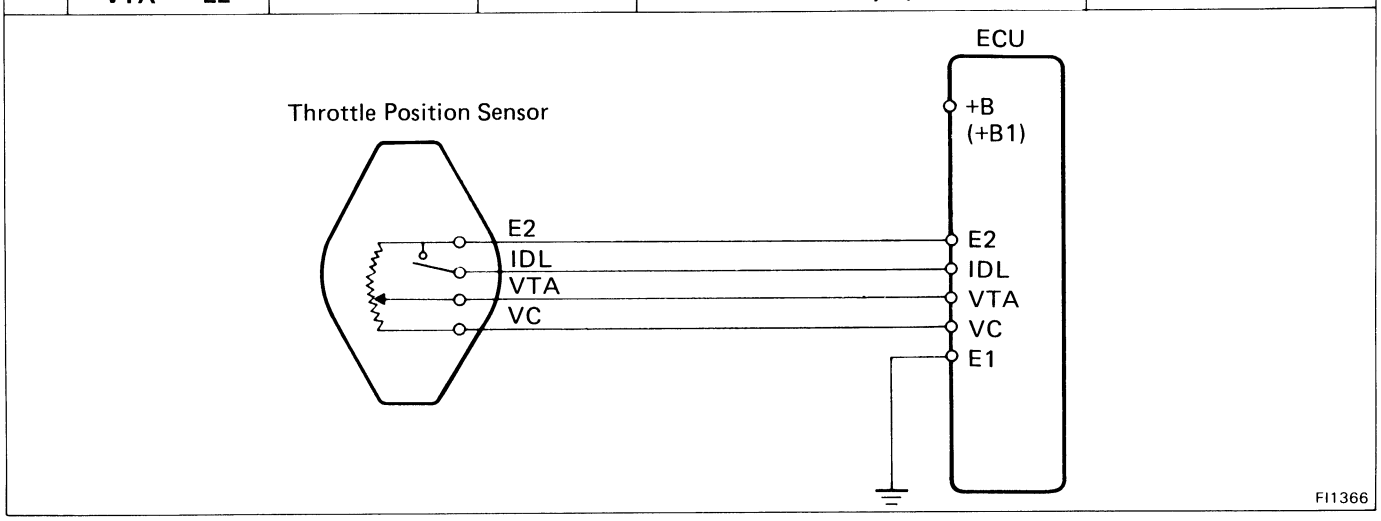

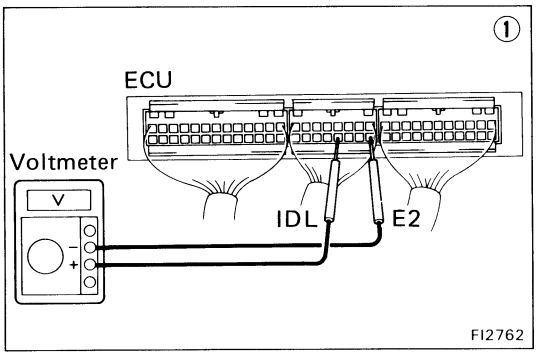

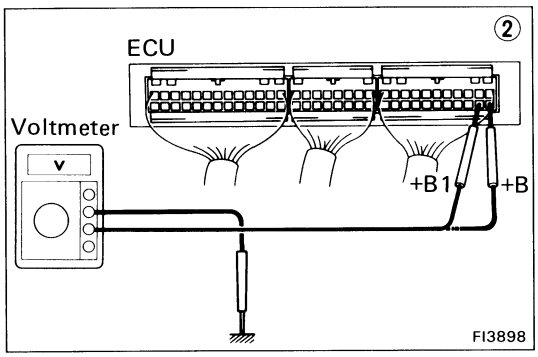

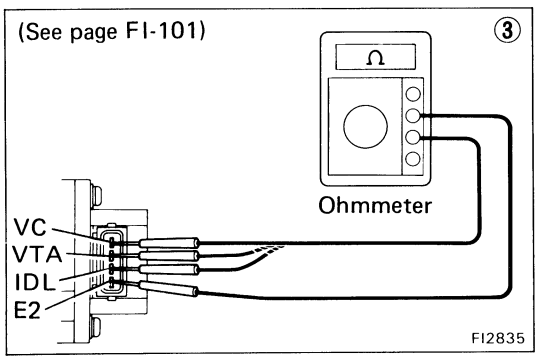

- **IDL – E2**

① There is no voltage between ECU terminals IDL and E2. **(IG SW ON)** (Throttle valve open)

↓

② Check that there is voltage between ECU terminal +B (+B1) and body ground. **(IG SW ON)**

- NO → Refer to No. 1. (See page FI-54)
- OK → Check wiring between ECU terminal E1 and body ground.
  - OK → Try another ECU.
  - BAD → Repair or replace.

Refer to No. 1. (See page FI-54)
- BAD → Repair or replace.
- OK → ③ Check throttle position sensor.
  - BAD → Repair or replace throttle position sensor.
  - OK → Check wiring between ECU and throttle position sensor.
    - BAD → Repair or replace.
    - OK → Try another ECU.

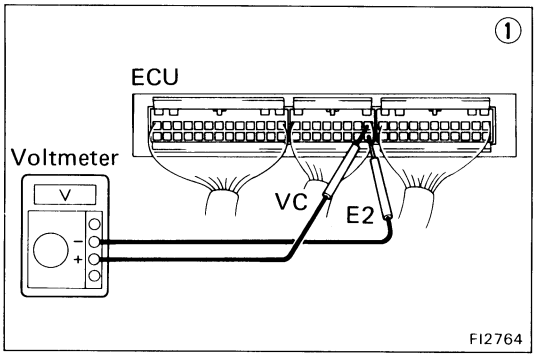

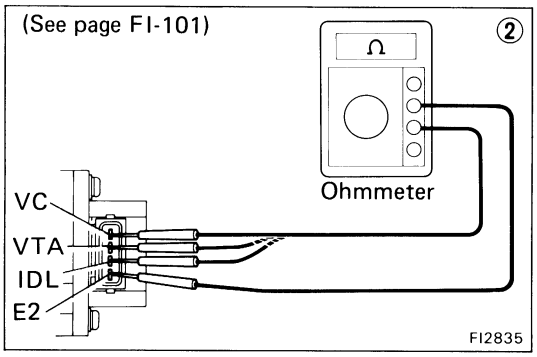

- **VC – E2**

① There is no voltage between ECU terminals VC and E2. **(IG SW ON)**

↓

Check that there is voltage between ECU terminal +B (+B1) and body ground. **(IG SW ON)**

- OK → ② Check throttle position sensor. (See page FI-101)
  - BAD → Repair or replace.
  - OK → Check wiring between ECU and throttle position sensor.
    - OK → Try another ECU.
    - BAD → Repair or replace wiring.
- NO → Refer to No. 1. (See page FI-54)

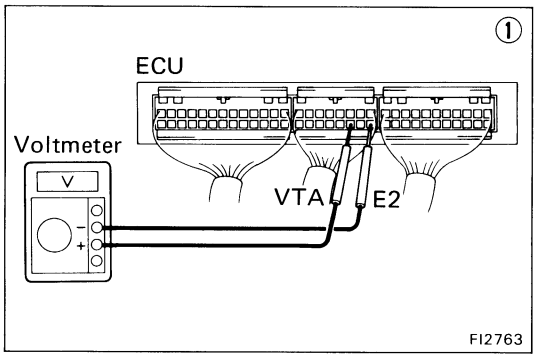

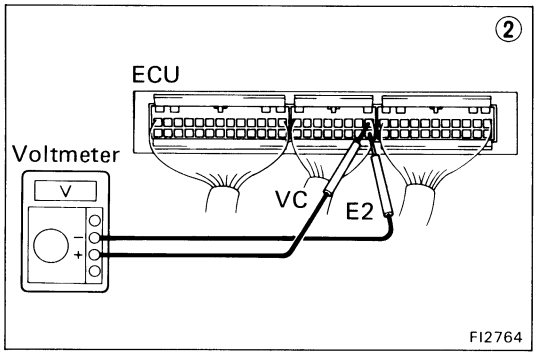

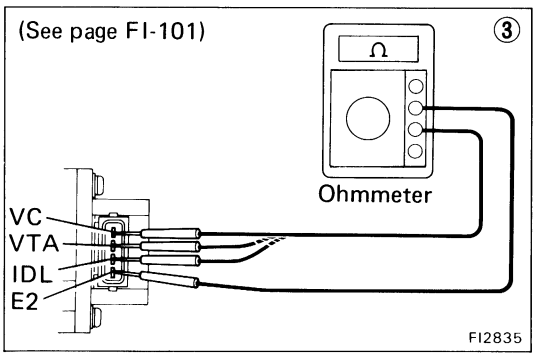

- **VTA – E2**

① There is no specified voltage at ECU terminals VTA and E2. **(IG SW ON)**

↓

② Check that there is voltage between ECU terminal VC and E2. **(IG SW ON)**

- NO → Refer to VC – E2 trouble section.
- OK →

↓

③ Check throttle position sensor.
- BAD → Repair or replace.
- OK →

↓

Check wiring between ECU and throttle position sensor.
- BAD → Repair or replace.
- OK →

↓

Try another ECU.

No.	Terminals	Trouble	Condition	STD Voltage
3	KS – Body ground	No voltage	Ignition SW ON	4 – 6 V
			Cranking or running	2 – 4 V
	VC – Body ground		Ignition SW ON	4 – 6 V

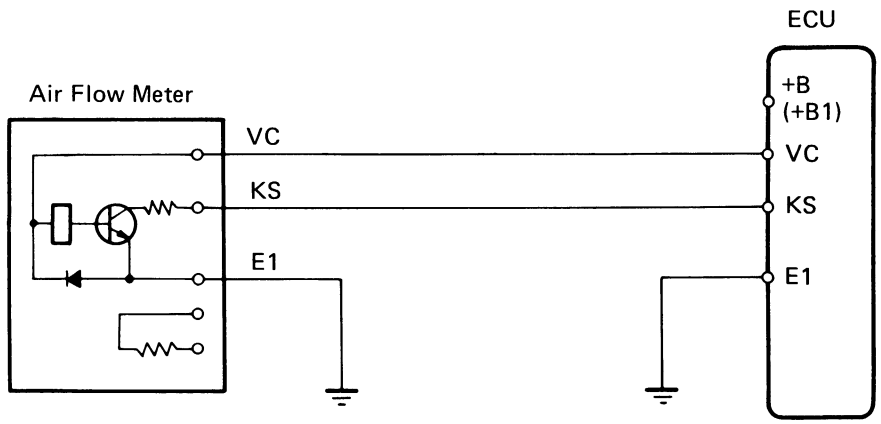

FI2560

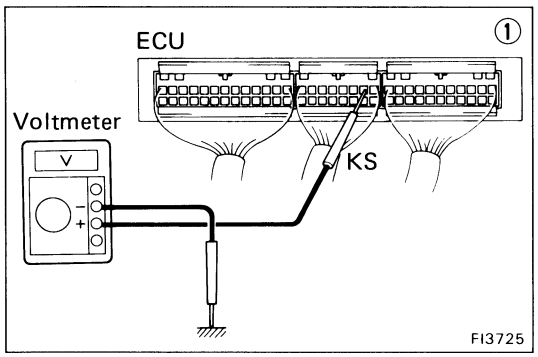

FI3725

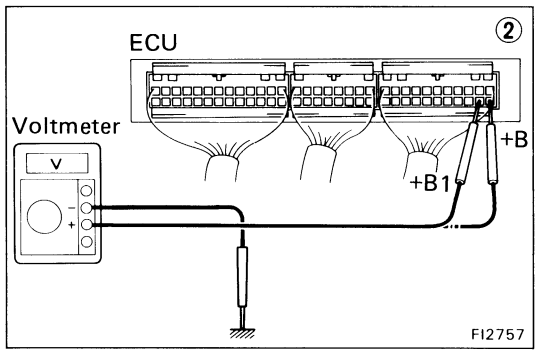

FI2757

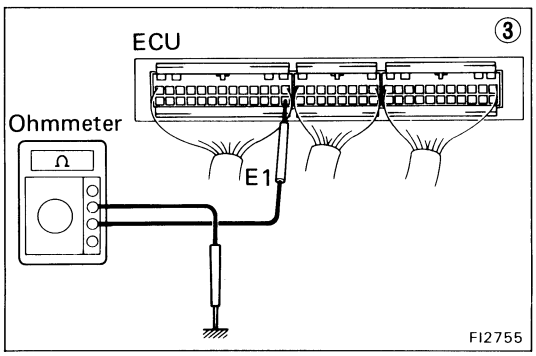

FI2755

- **KS – Body ground**

① There is no voltage between ECU terminals KS and body ground. **(IG SW ON)**

↓

② Check that there is voltage between ECU terminal +B (+B1) and body ground. **(IG SW ON)**

- OK → ③
- NO → Refer to No. 1. (See page FI-54)

③ Check wiring between ECU terminal E1 and body ground.

- OK → Check wiring between ECU and air flow meter.
  - OK → Try another ECU.
  - BAD → Repair or replace.
- BAD → Repair or replace.

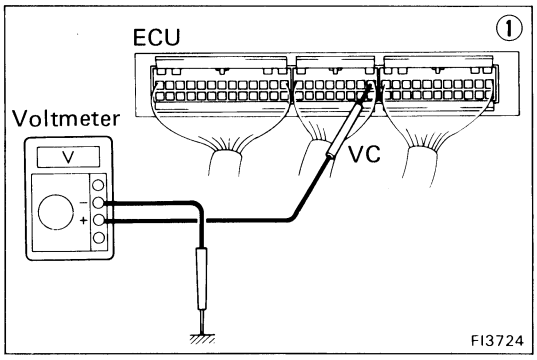

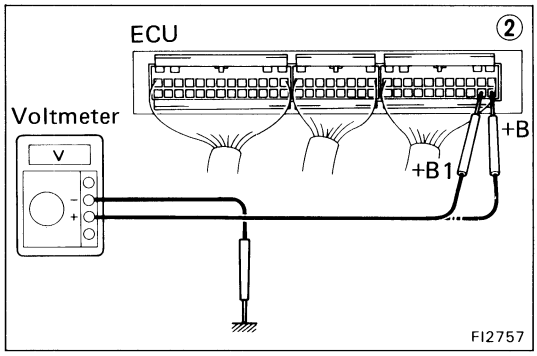

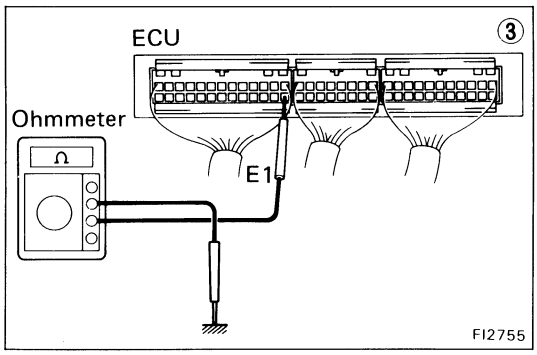

- **VC – Body ground**

① There is no voltage between ECU terminals VC and body ground. **(IG SW ON)**

↓

② Check that there is voltage between ECU terminal +B (+B1) and body ground. **(IG SW ON)**

OK → ③

NO → Refer to No. 1. (See page FI-54)

③ Check wiring between ECU terminal E1 and body ground.

OK → Check wiring between ECU and air flow meter.

BAD → Repair or replace.

Check wiring between ECU and air flow meter.

OK → Try another ECU.

BAD → Repair or replace.

No.	Terminals	Trouble	Condition	STD Voltage
4	No. 10, No. 20, No. 30 — E01, E02	No voltage	Ignition switch ON	10 – 14 V

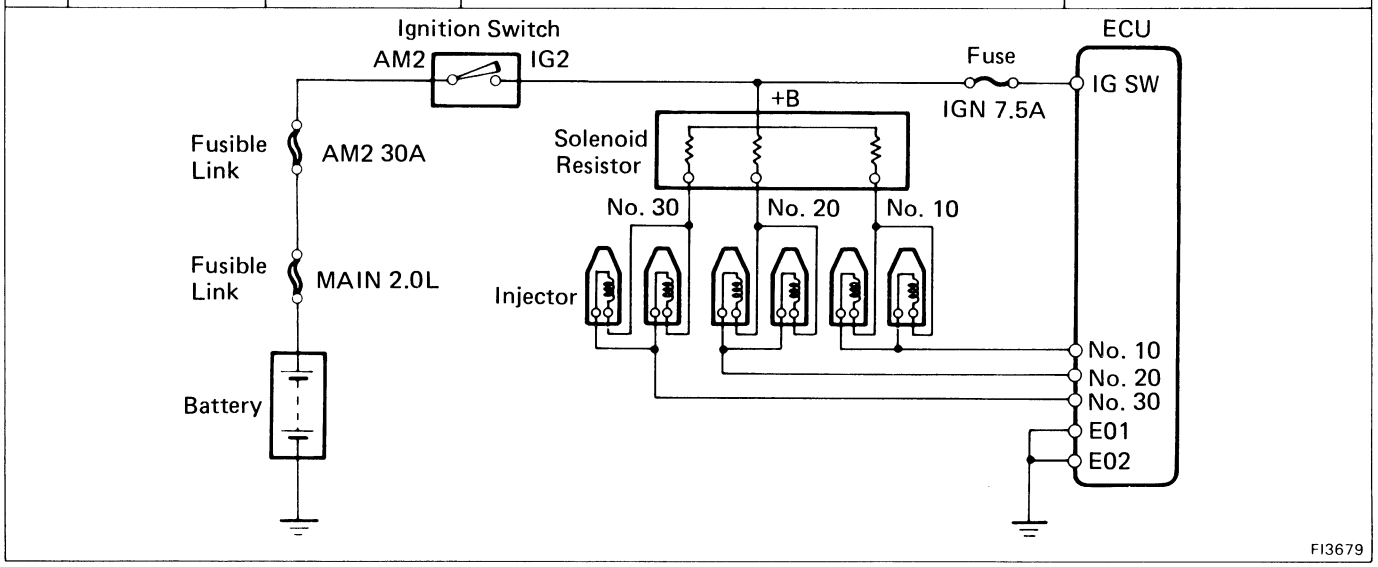

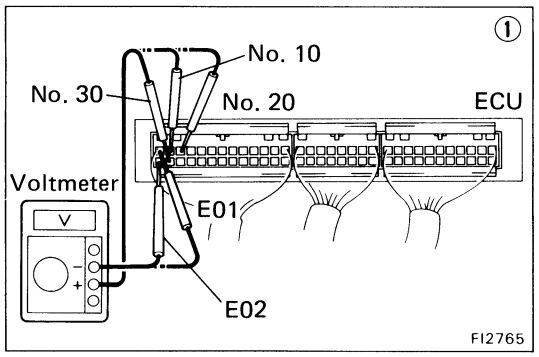

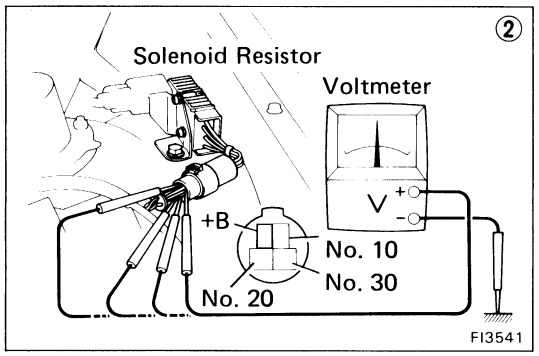

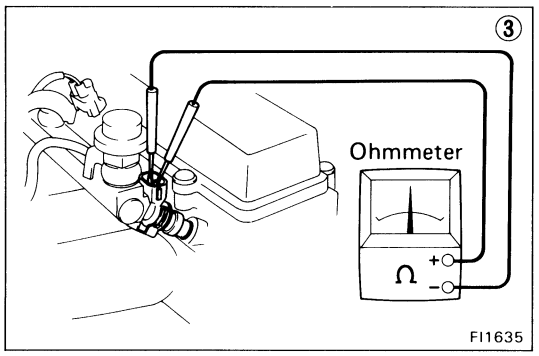

① There is no voltage between ECU terminal No. 10, No. 20 and/or No. 30 and E01 or E02. **(IG SW ON)**

② Check that there is specified voltage between resistor terminal +B and body ground. **STD voltage: 10 – 14 V**

- OK → ②
- NO → Check fuse, fusible links and ignition switch.
  - BAD → Repair or replace.
  - OK → Check wiring between resister and battery.
    - BAD → Repair or replace.

② Check that there is specified voltage between resistor terminal (No. 10, No. 20 or No. 30) and body ground. **STD voltage: 10 – 14 V**

- OK → ③
- BAD → Replace resistor.

③ Check resistance of each injector. **STD resistance: 2.0 – 3.8 Ω**

- OK → Check wiring between ECU and injector.
  - OK → Try another ECU.
  - BAD → Repair or replace.
- BAD → Replace injector.

No.	Terminals	Trouble	Condition		STD Voltage
5	THA – E2	No voltage	Ignition switch ON	Intake air temperature 20°C (68°F)	1 – 3 V

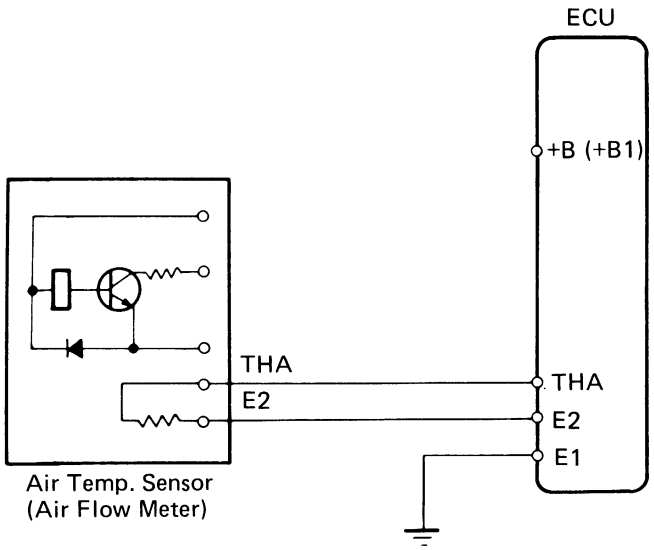

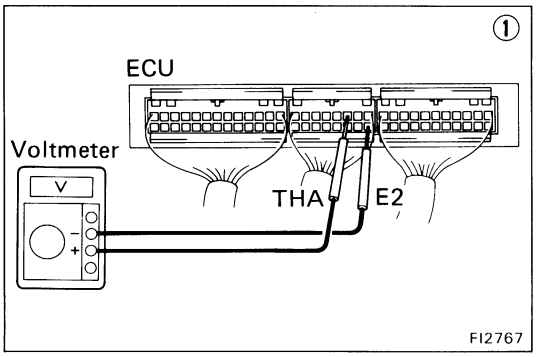

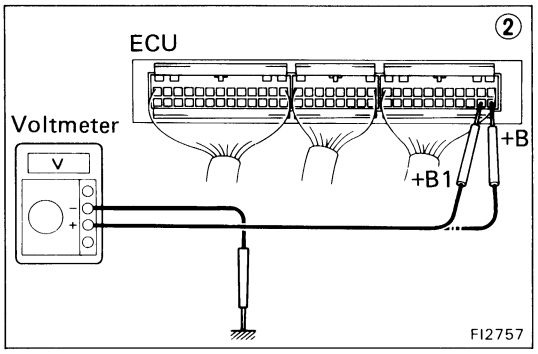

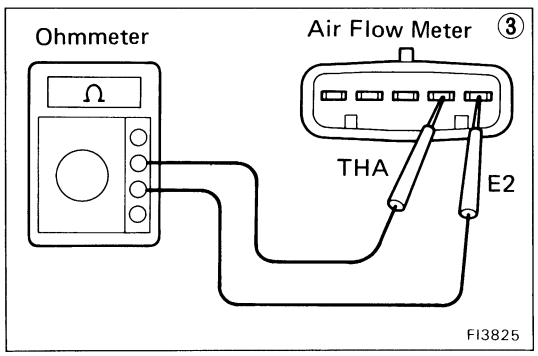

① There is no voltage between ECU terminals THA and E2. **(IG SW ON)**

↓

② Check that there is voltage between ECU terminal +B (+B1) and body ground. **(IG SW ON)**

- NO → Refer to No. 1. (See page FI-54)
- OK ↓

Check wiring between ECU terminal E1 and body ground.

- BAD → Repair or replace.
- OK ↓

③ Check air temp. sensor. (See page FI-96)

- BAD → Replace air flow meter.
- OK ↓

Check wiring between ECU and air temp. sensor.

- BAD → Repair or replace.
- OK → Try another ECU.

No.	Terminals	Trouble	Condition		STD Voltage
6	THW – E2	No voltage	Ignition switch ON	Coolant temperature 80°C (176°F)	0.1 – 1.0 V

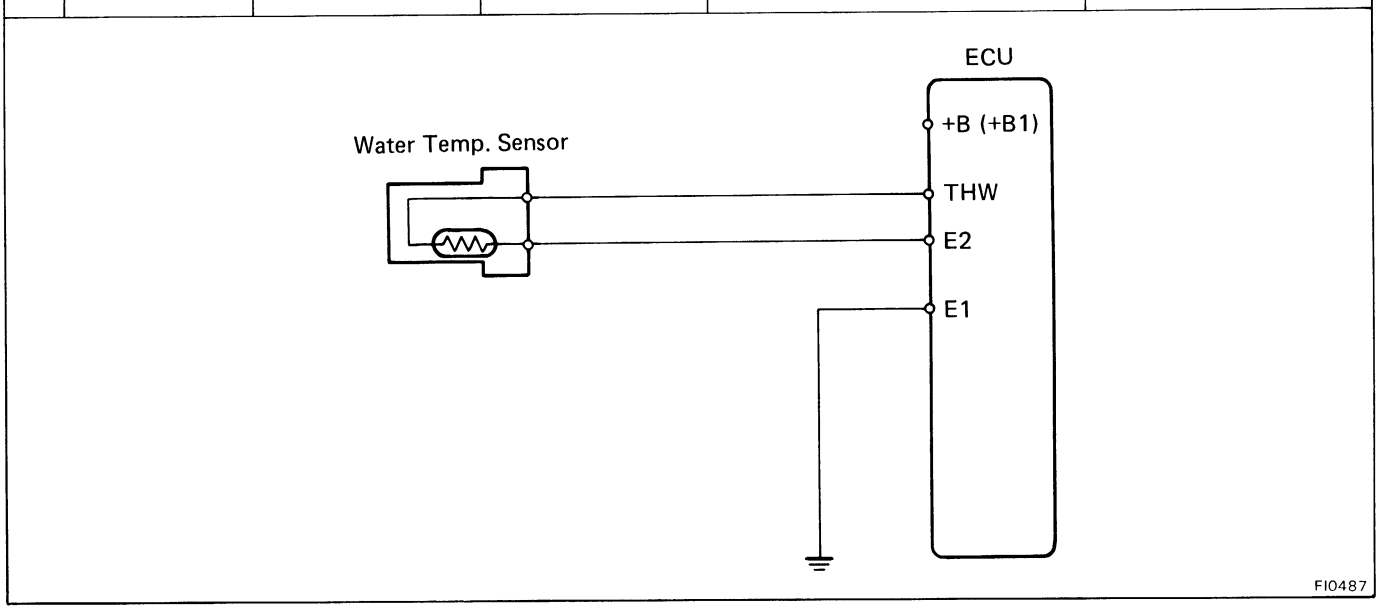

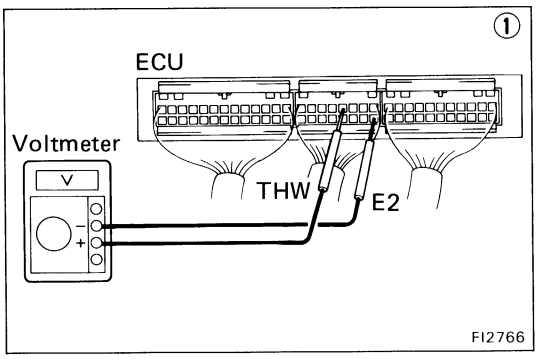

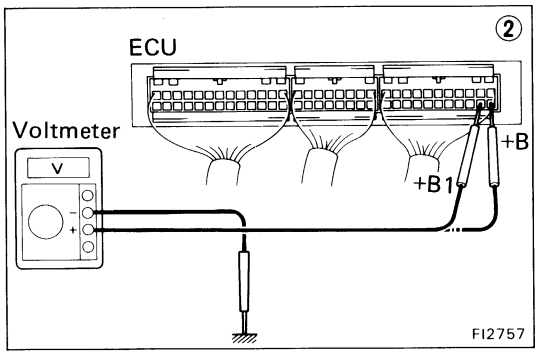

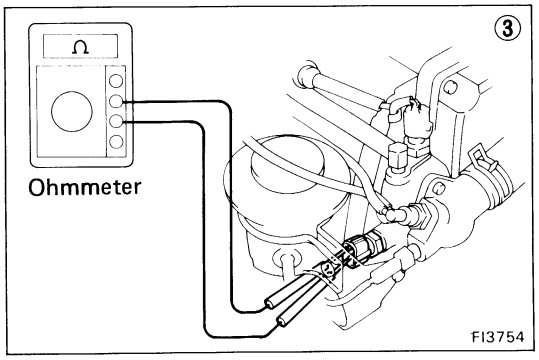

① There is no voltage between ECU terminals THW and E2. **(IG SW ON)**

② Check that there is voltage between ECU terminal +B (+B1) and body ground. **(IG SW ON)**

- NO → Refer to No. 1. (See page FI-54)
- OK → Check wiring between ECU terminal E1 and body ground.
  - BAD → Repair or replace.
  - OK → ③ Check water temp. sensor. (See page FI-113)
    - BAD → Replace water temp. sensor.
    - OK → Check wiring between ECU and water temp. sensor.
      - BAD → Repair or replace.
      - OK → Try another ECU.

No.	Terminals	Trouble	Condition	STD Voltage
7	STA – E1	No voltage	Cranking	6 – 14 V

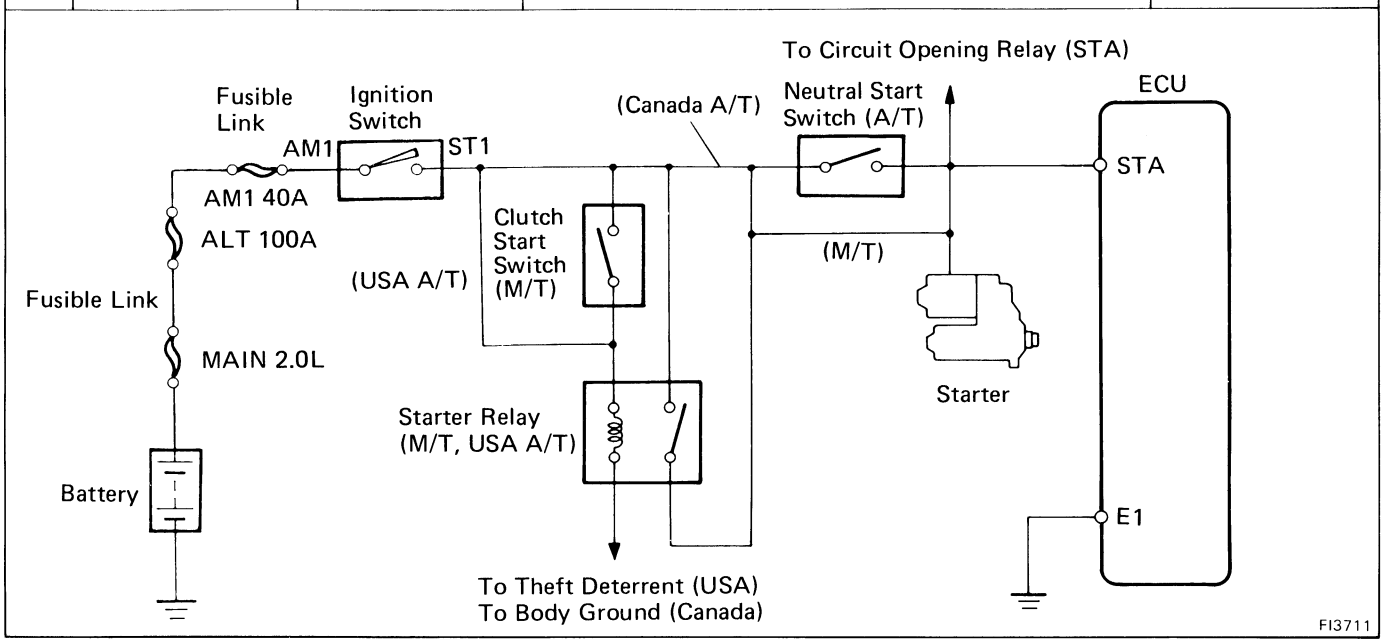

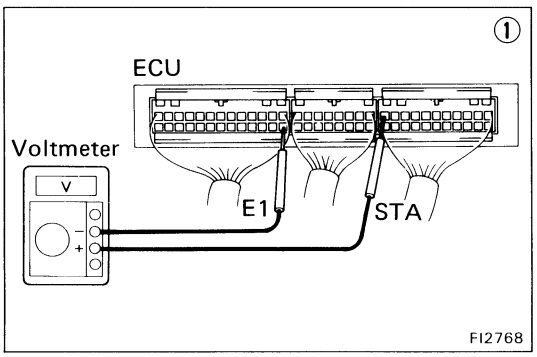

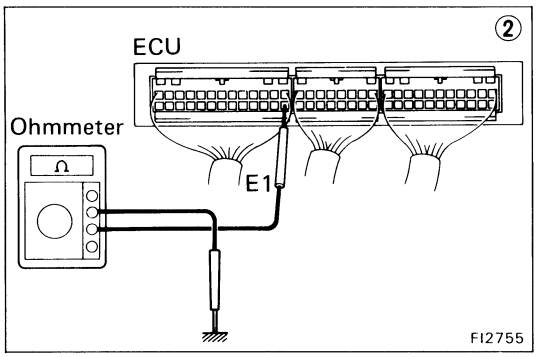

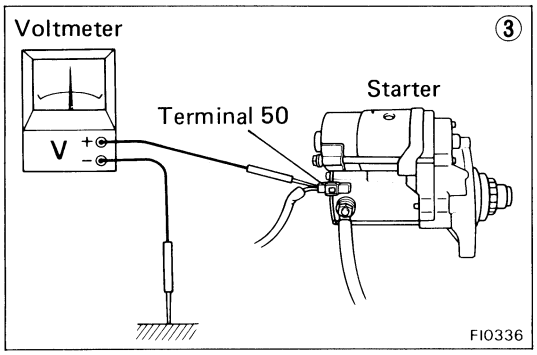

① There is no voltage between ECU terminals STA and E1. **(IG SW START)**

- Check starter operation.
  - OK → Check wiring between ECU terminal STA and ignition switch terminal ST1.
    - BAD → Repair or replace.
    - OK → ② Check wiring between ECU terminal E1 and body ground.
      - OK → Try another ECU.
      - BAD → Repair or replace.
  - BAD → Check fusible links, battery, wiring, ignition switch and neutral start switch.
    - BAD → Repair or replace.
    - OK → ③ Check that there is voltage at terminal 50 of starter. **(IG SW START) STD voltage: 6 – 14 V**
      - OK → Check starter.
      - NO → Check wiring between ignition switch terminal ST1 and starter terminal 50.

No.	Terminals	Trouble	Condition	STD Voltage
8	IGT – E1	No voltage	Idling	0.7 – 1.0 V

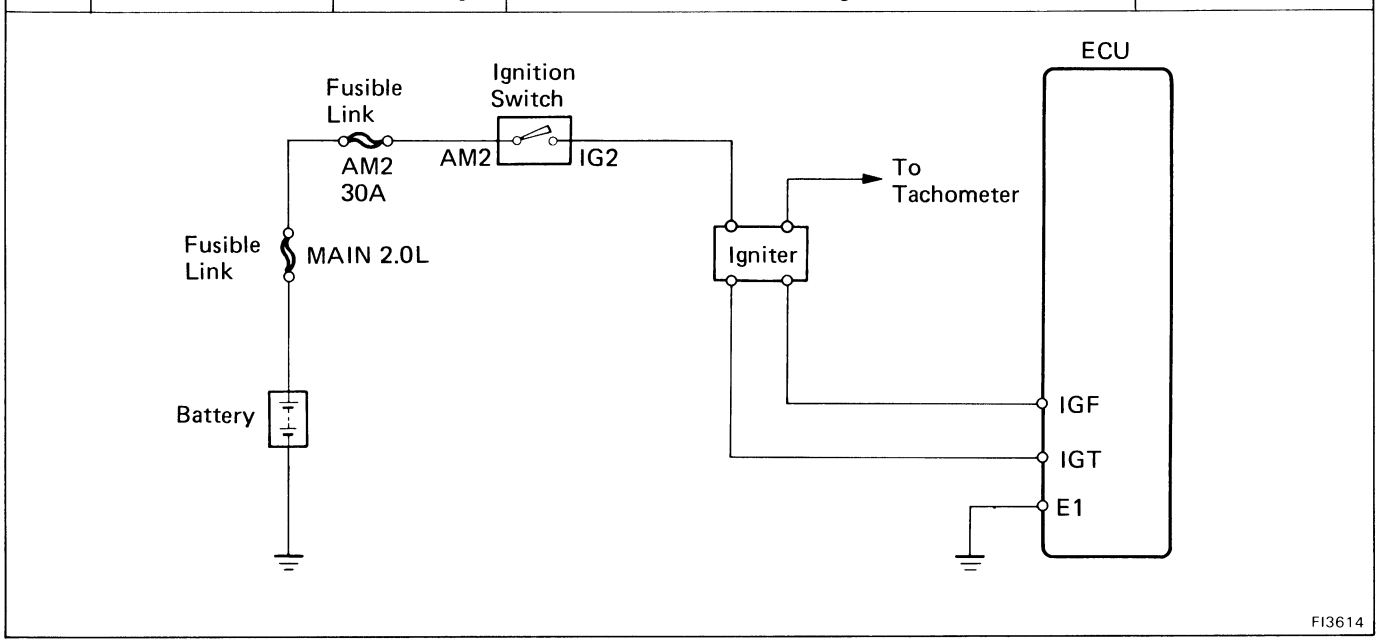

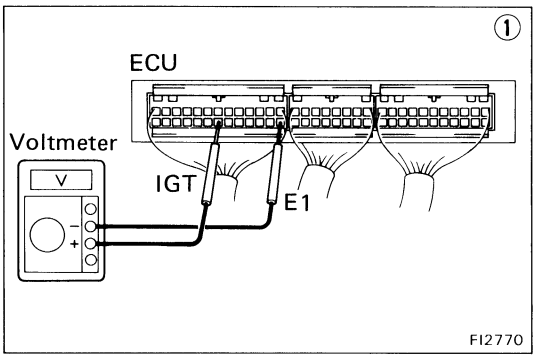

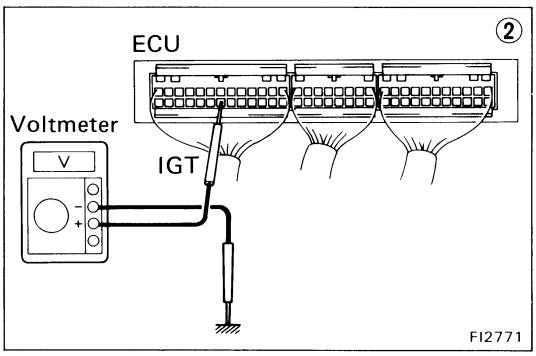

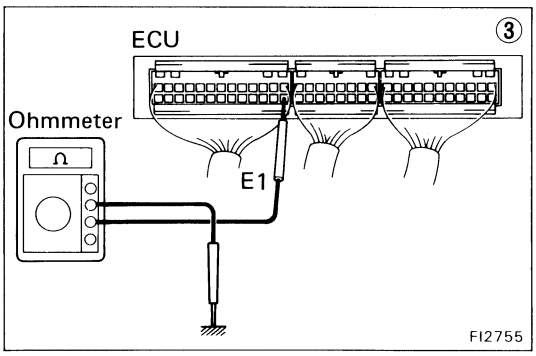

① There is no voltage between ECU terminals IGT and E1. **(Idling)**

↓

② Check that there is voltage between ECU terminal IGT and body ground. **(Idling)**

NO → ↓ OK

③ Check wiring between ECU terminal E1 and body ground. → BAD → Repair or replace.

↓ OK

Try another ECU.

Check fusible links and ignition switch. → BAD → Repair or replace.

↓ OK

Check cam position sensor. → BAD → Repair or replace.

↓ OK

Check wiring between ECU and battery. → BAD → Repair or replace.

↓ OK

Check igniter. → BAD → Repair or replace.

No.	Terminals	Trouble	Condition	STD Voltage
9	IGDA IGDB — E1	No voltage	Idling	1 – 3 V

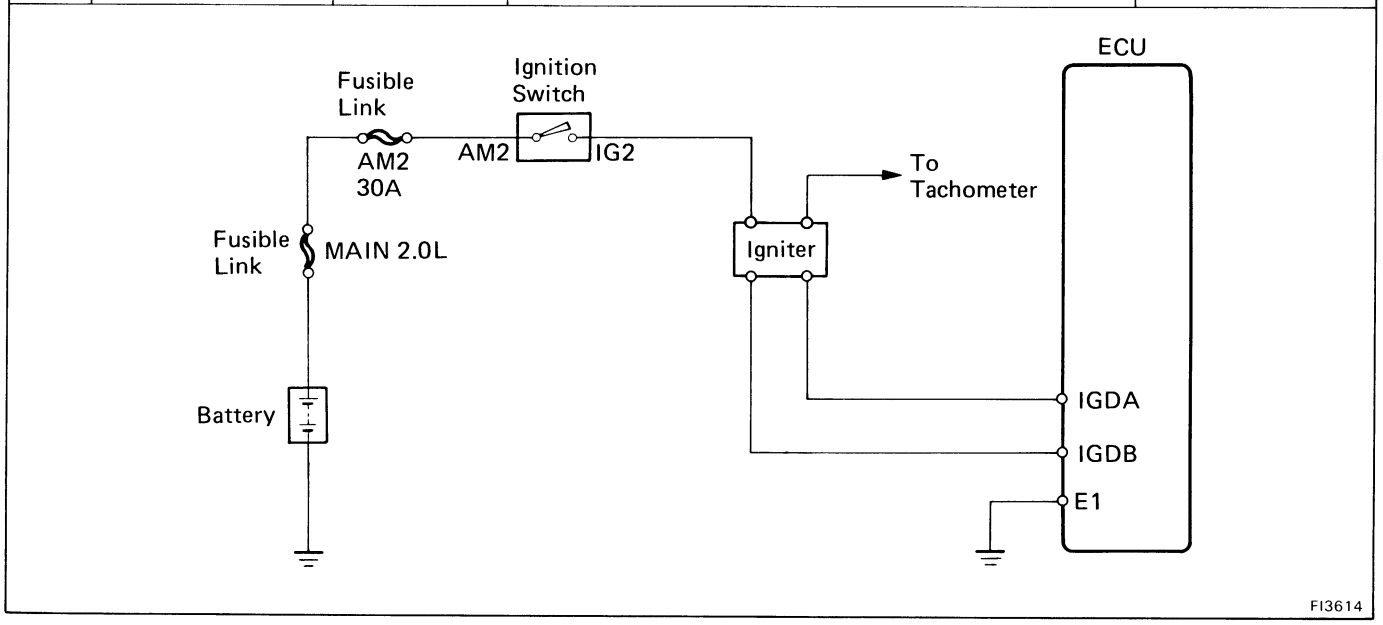

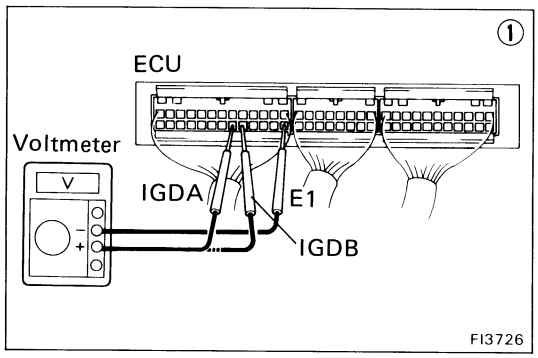

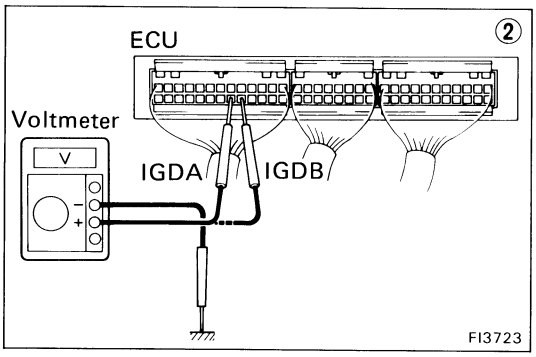

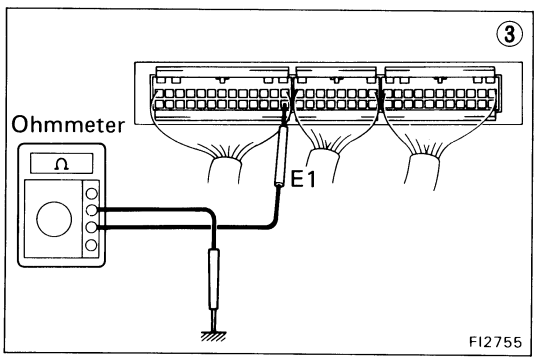

① There is no voltage between ECU terminals IGDA or IGDB and E1. **(Idling)**

↓

② Check that there is voltage between ECU terminal IGDA or IGDB and body ground. **(Idling)**

NO ↓ OK

③ Check wiring between ECU terminal E1 and body ground. — BAD → Repair or replace.

OK ↓

Try another ECU

Check fusible links and ignition switch. — BAD → Repair or replace.

OK ↓

Check cam position sensor. — BAD → Repair or replace.

OK ↓

Check wiring between ECU and battery. — BAD → Repair or replace.

OK ↓

Check igniter. — BAD → Repair or replace.

No.	Terminals	Trouble	Condition	STD Voltage
10	ISC1~ISC4–E1	No voltage	Ignition switch ON	9 – 14 V

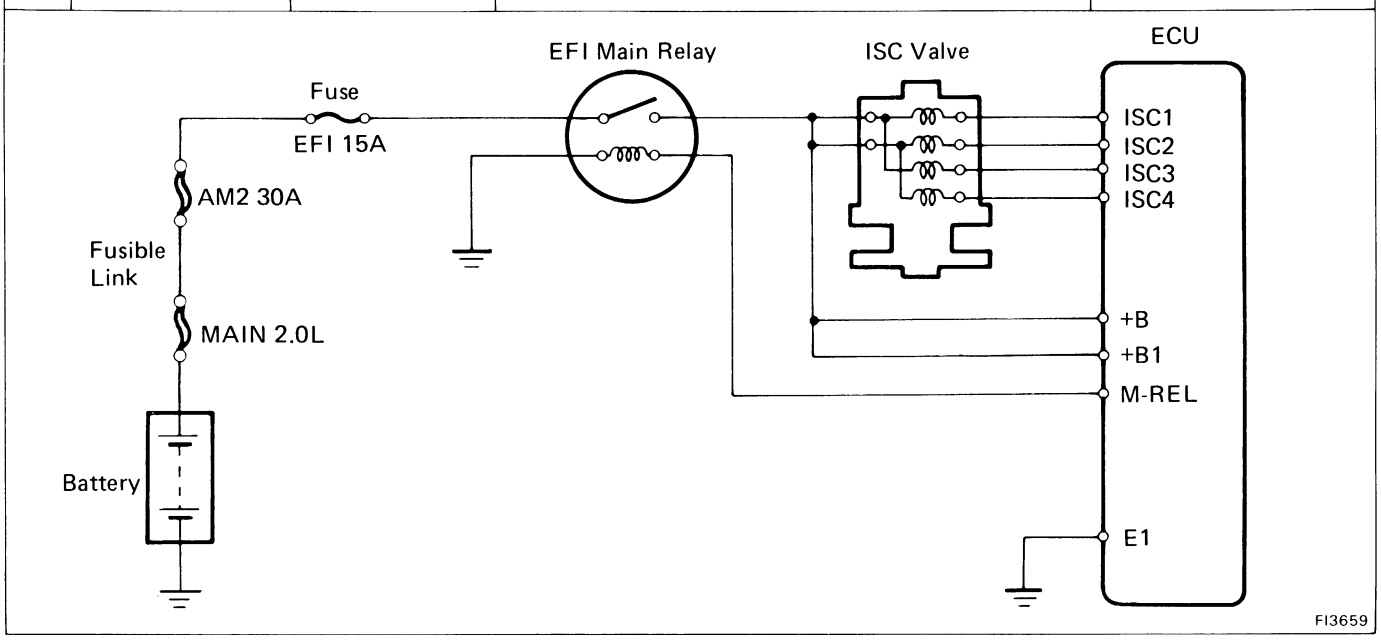

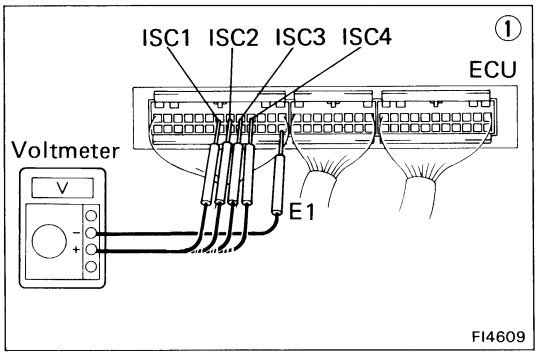

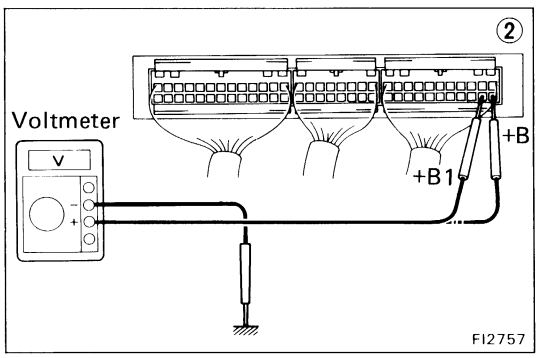

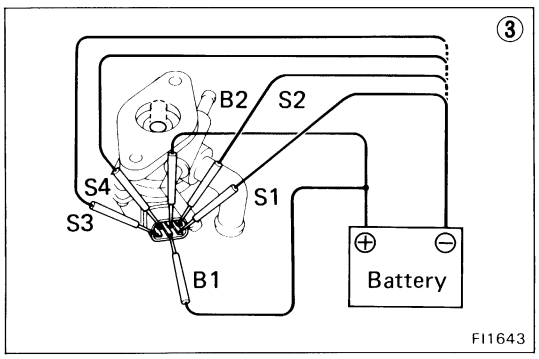

① There is no voltage between ECU terminals ISC1 ~ ISC4 and E1. **(IG SW ON)**

② Check that there is voltage between ECU terminal +B (+B1) and body ground. **(IG SW ON)**

- NO → Refer to No. 1. (See page FI-54)
- OK → Check wiring between ECU terminal E1 and body ground.
  - BAD → Repair or replace.
  - OK → ③ Check ISV valve. (See page FI-106)
    - BAD → Replace ISC valve.
    - OK → Check wiring between ECU and EFI main relay.
      - BAD → Repair or replace.
      - OK → Try another ECU.

No.	Terminals	Trouble	Condition	STD Voltage
11	W – E1	No voltage	No. trouble ("CHECK ENGINE" warning light off) and engine running	8 – 14 V

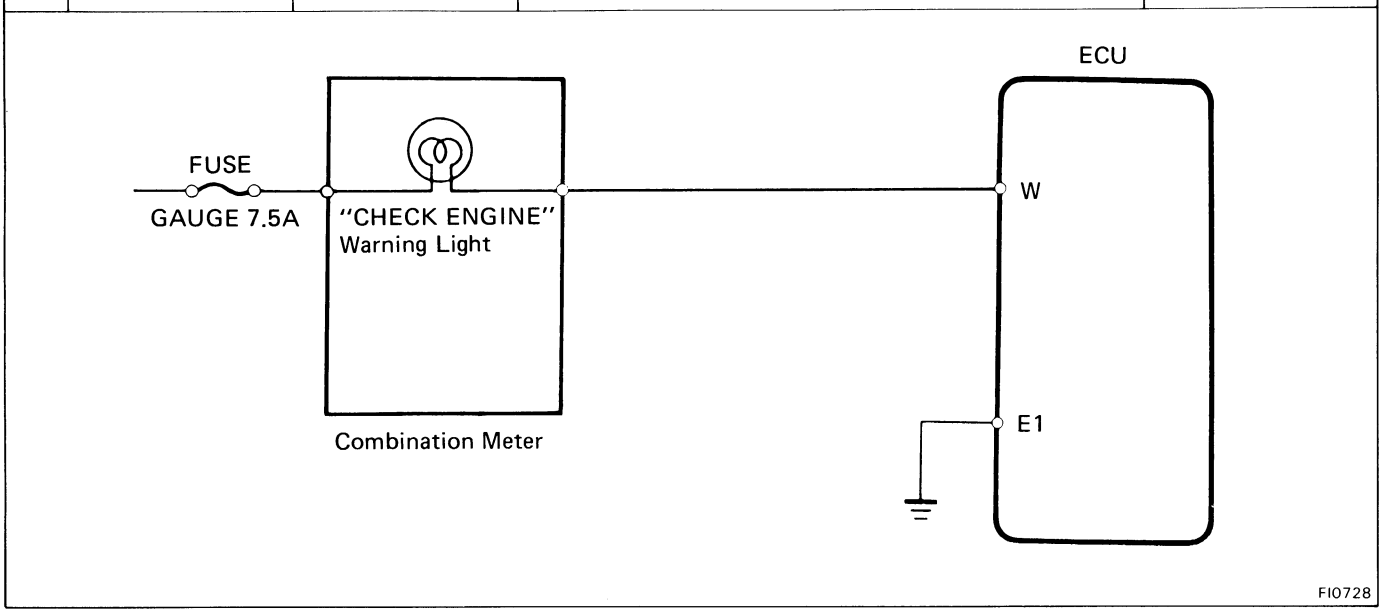

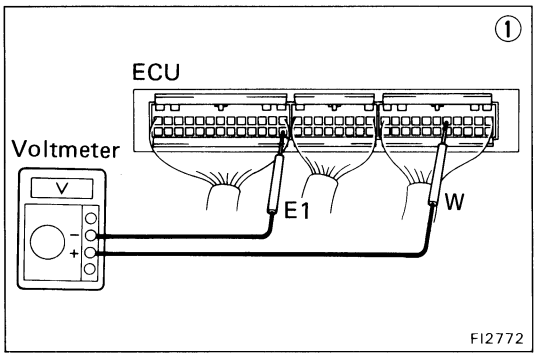

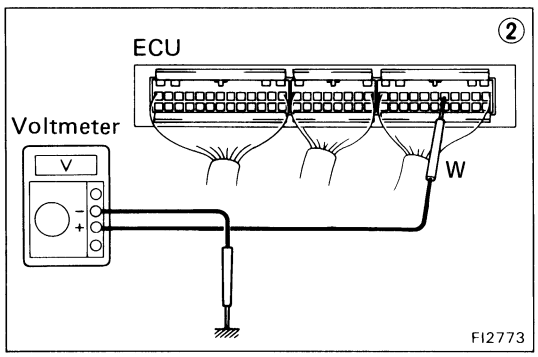

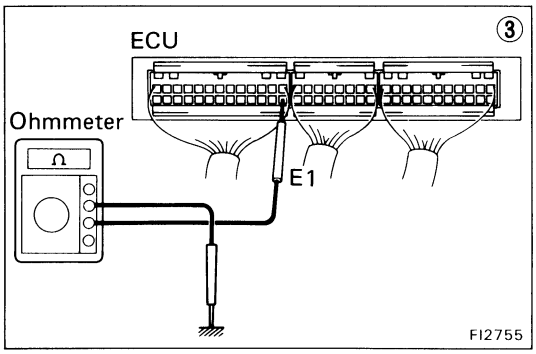

① There is no voltage between ECU terminals W and E1. **(Idling)**

↓

② Check that there is voltage between ECU terminal W and body ground.

- NO → Check GAUGE fuse (7.5A) and "CHECK ENGINE" warning light.
- OK → ③ Check wiring between ECU terminal E1 and body ground.
  - OK → Try another ECU.
  - BAD → Repair or replace.

Check GAUGE fuse (7.5A) and "CHECK ENGINE" warning light.

- OK → Check wiring between ECU terminal W and fuse.
- BAD → Repair or replace.
  - Fuse blows again → Check wiring between ECU terminal W and fuse.

Check wiring between ECU terminal W and fuse.

- BAD → Repair or replace.

No.	Terminals	Trouble	Condition		STD Voltage
12	A/C – E1	No voltage	Ignition switch ON	Air conditioning ON	10 – 14 V

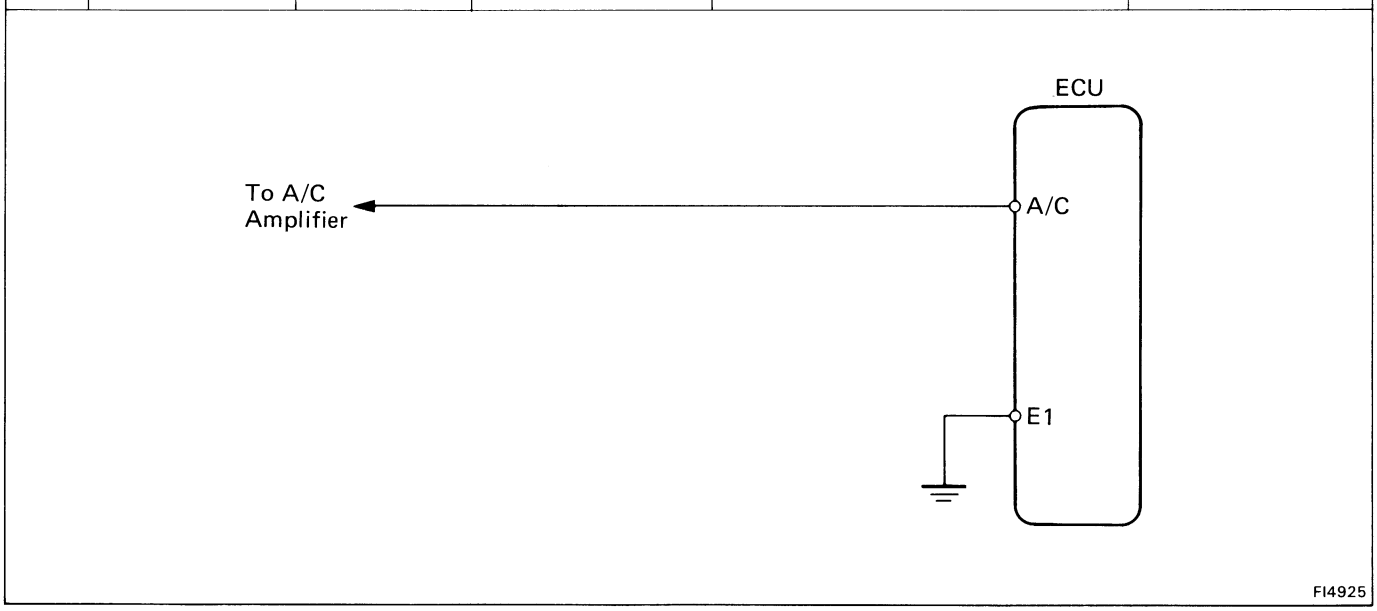

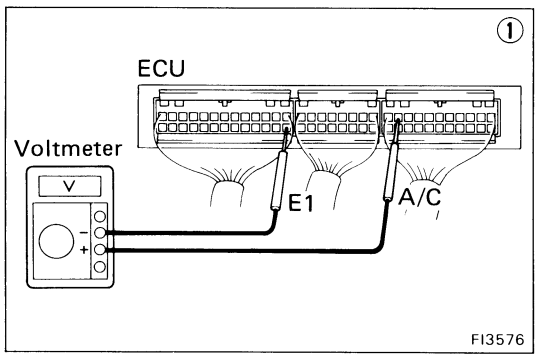

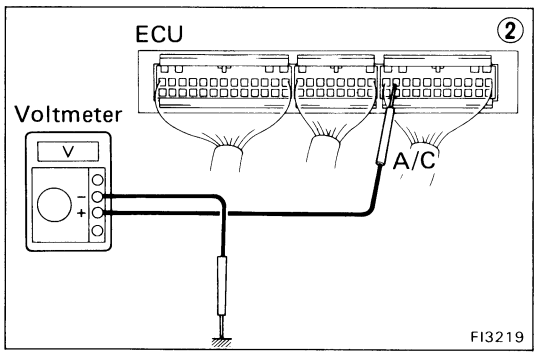

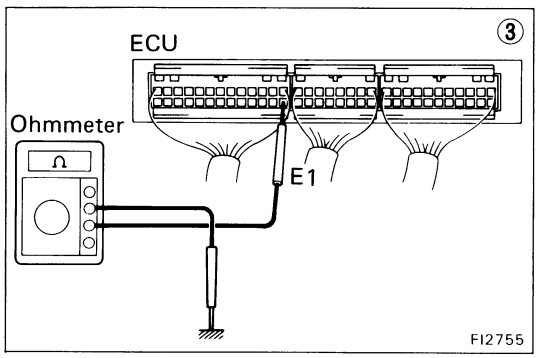

① There is no voltage between ECU terminals A/C and E1. **(Air conditioning ON)**

② Check that there is voltage between ECU terminal A/C and body ground.

- NO → Check that there is voltage between amplifier terminal and body ground.
- OK → ③ Check wiring between ECU terminal E1 and body ground.
  - OK → Try another ECU.
  - BAD → Repair or replace.

Check that there is voltage between amplifier terminal and body ground.

- BAD → Repair or replace.
- OK → Check wiring between amplifier and ECU terminal A/C.
  - BAD → Repair or replace.

California vehicles only

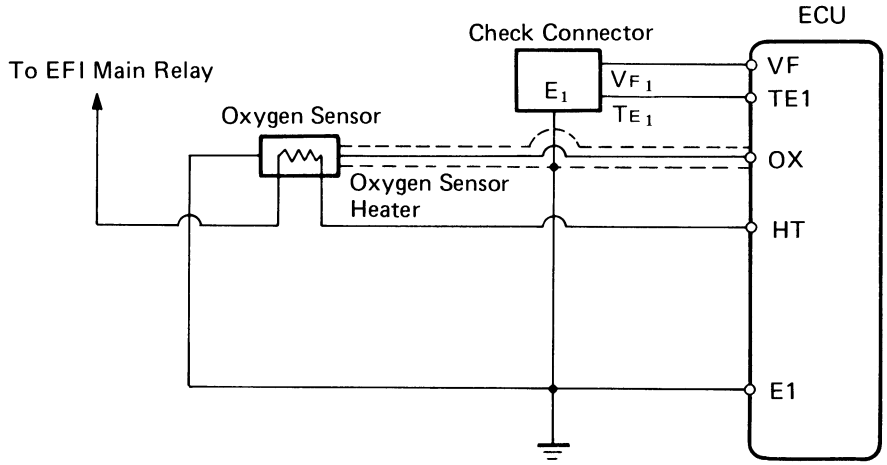

FI2678

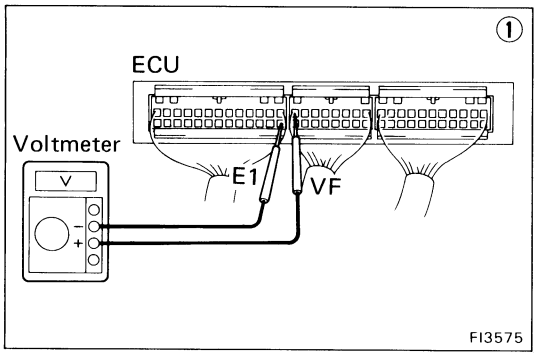

FI3575

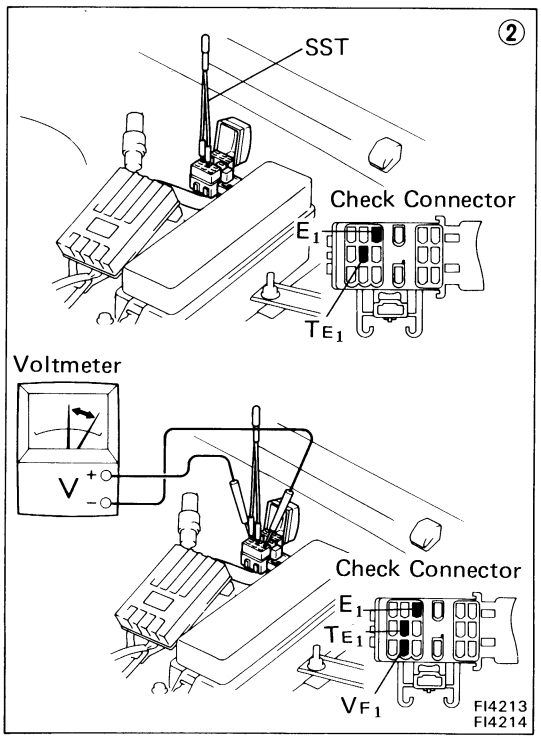

FI4213
FI4214

① There is no voltage between ECU terminals VF and E1.

Check that there is specified voltage between ECU terminal VF and body ground.

- NO → Check for suction of air into exhaust system.
- OK → Check wiring between ECU terminal E1 and body ground.
  - OK → Try another ECU.
  - BAD → Repair or replace.

Check for suction of air into exhaust system.
- BAD → Repair air suction.
- OK ↓

Check for air leak from air intake system.
- BAD → Repair air leak.
- OK ↓

Check spark plugs.
- BAD → Repair or replace.
- OK ↓

Check cam position sensor and ignition system.
- BAD → Repair or replace.
- OK ↓

Check fuel pressure.
- BAD → Repair or replace.
- OK ↓

Check injectors.
- BAD → Repair or replace.
- OK ↓

Check cold start injector. *
- BAD → Repair or replace.
- OK ↓

Check air flow meter.
- BAD → Repair or replace.
- OK ↓

② Check operation of oxygen sensor.
- OK → System normal.
- BAD ↓

Check wiring between oxygen sensor and ECU connectors.
- BAD → Repair wiring.
- OK ↓

Replace oxygen sensor.

* Rich malfunction only

California vehicles only

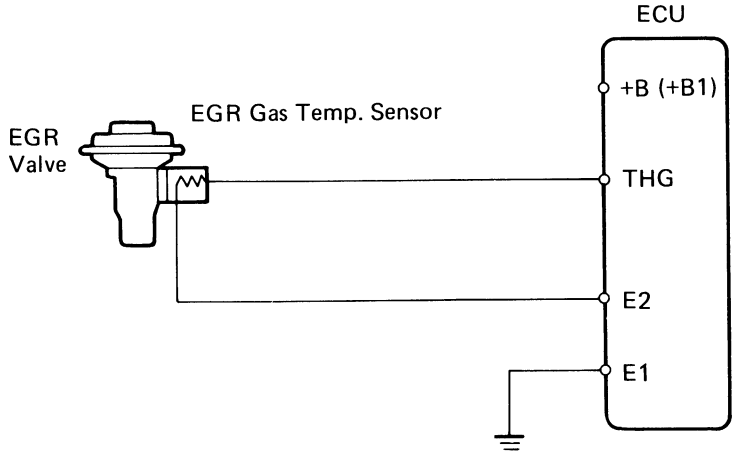

FI2680

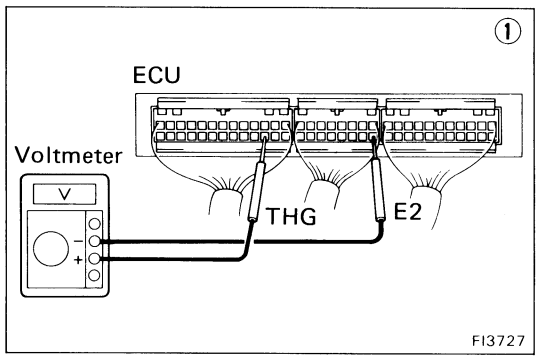

FI3727

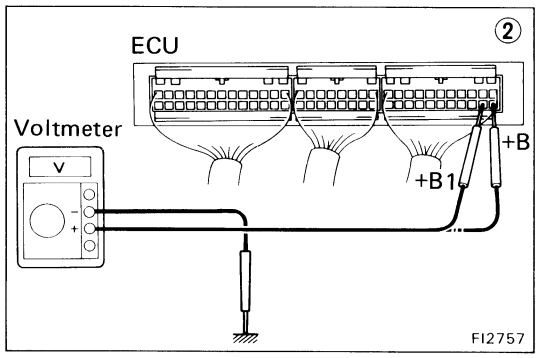

FI2757

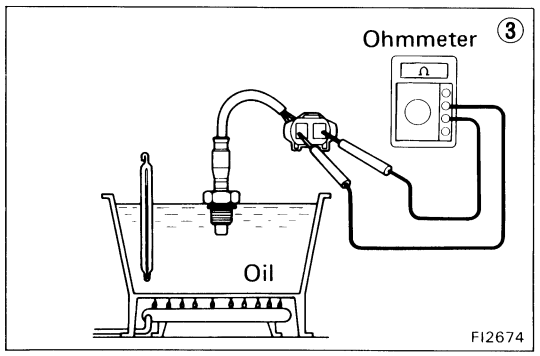

FI2674

① No voltage between ECU terminal THG and E2. **(IG SW ON)**

↓

② Check that there is voltage between ECU terminal +B (+B1) and body ground. **(IG SW ON)**

- NO → Refer to No. 1. (See page FI-54)
- OK ↓

Check wiring between ECU terminal E1 and body ground.

- BAD → Repair or replace.
- OK ↓

Check EGR system.

- BAD → Repair or replace.
- OK ↓

③ Check EGR gas temp. sensor. (See page FI-118)

- BAD → Replace EGR gas temp. sensor.
- OK → Check wiring between ECU and EGR gas temp. sensor.
  - OK → Try another ECU.
  - BAD → Repair or replace.

FUEL SYSTEM
Fuel Pump

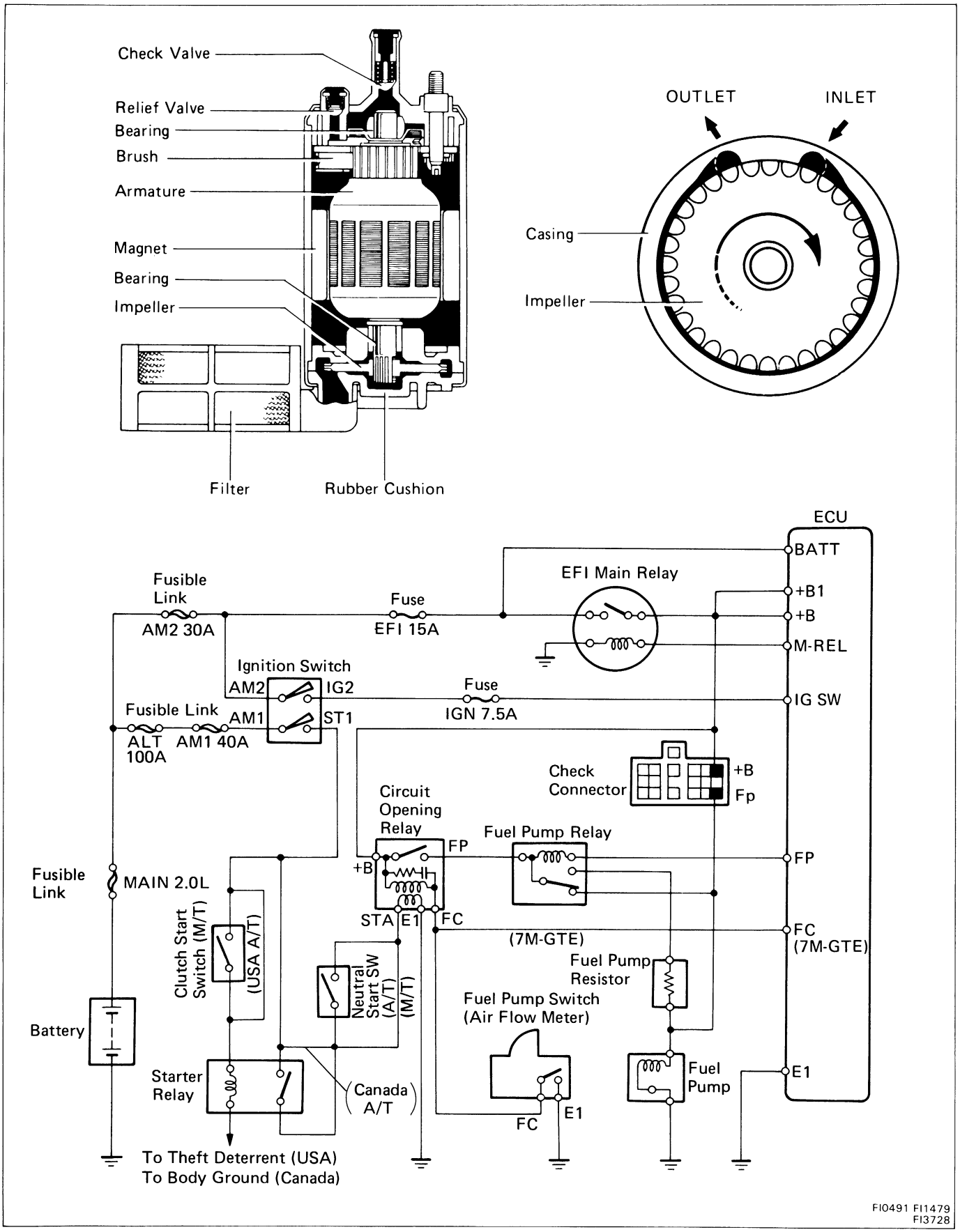

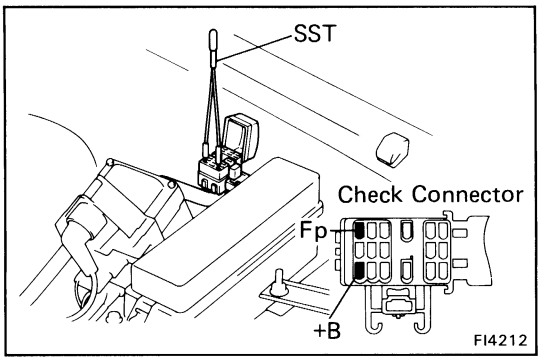

ON-VEHICLE INSPECTION

1. CHECK FUEL PUMP OPERATION

(a) Turn the ignition switch ON.

HINT: Do not start the engine.

(b) Using SST, connect terminals +B and Fp of the check connector.

SST 09843-18020

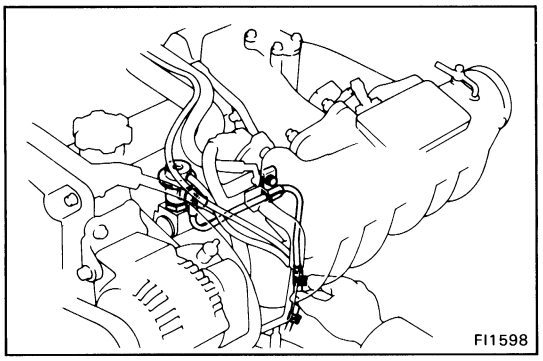

(c) Check that there is pressure in the fuel return hose.

HINT: At this time, you will hear fuel return noise.

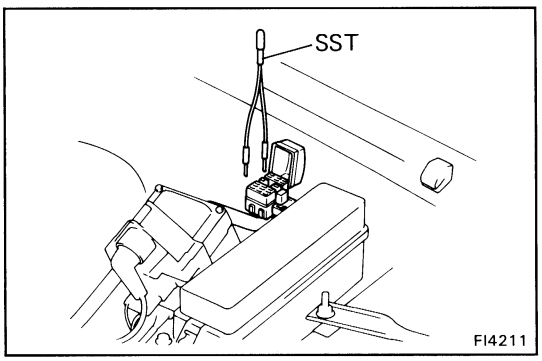

(d) Remove SST.

SST 09843-18020

(e) Turn the ignition switch OFF.

If there is no pressure, check the following parts:

- Fusible links
- Fuses (EFI, IGN)
- EFI main relay
- Fuel pump
- ECU
- Wiring connections

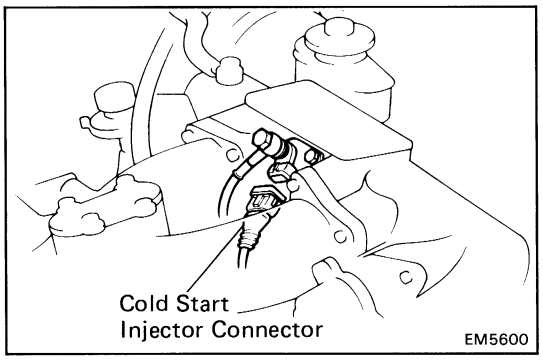

2. INSPECT FUEL PRESSURE

(a) Check the battery voltage above 11 volts.

(b) Disconnect the cable from the negative (−) terminal of the battery.

(c) (7M-GE)
Disconnect the cold start injector connector.

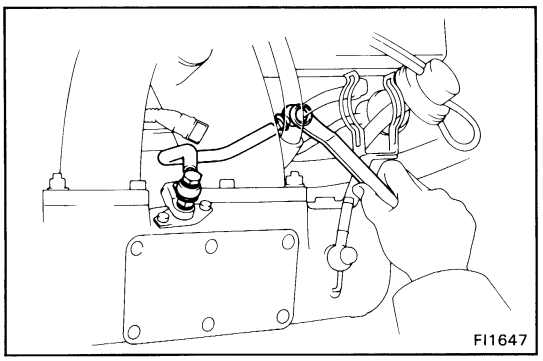

(d) (7M-GE)
Disconnect the cold start injector tube.

- Place a suitable container or shop towel under the cold start injector tube.
- Remove the union bolt and two gaskets, and disconnect cold start injector tube.

HINT: Slowly loosen the union bolt.

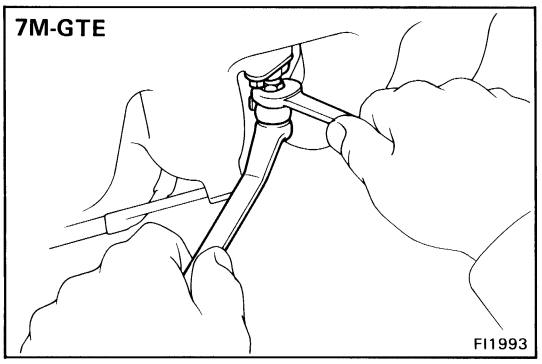

(e) (7M-GTE)
Remove the cold start injector tube.

- Place a suitable container or shop towel under the cold start injector.
- Slowly loosen the union bolt of the cold start injector tube and remove the bolt and two gaskets from the cold start injector.

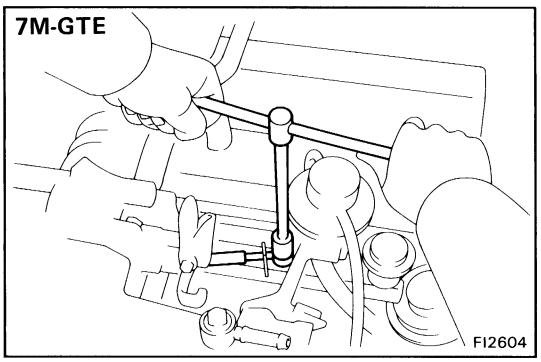

- Remove the union bolt, fuel tube and two gaskets.

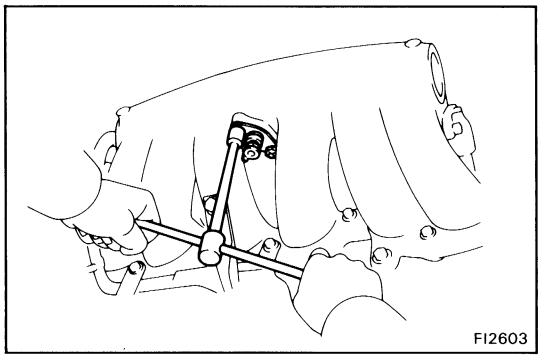

(f) (7M-GTE)
Remove the cold start injector.
(See page FI-78)

(g) (7M-GTE)
Install the gasket and cold start injector with the bolts without connecting the cold start injector connector.

Torque: 55 kg-cm (48 in.-lb, 5.4 N·m)

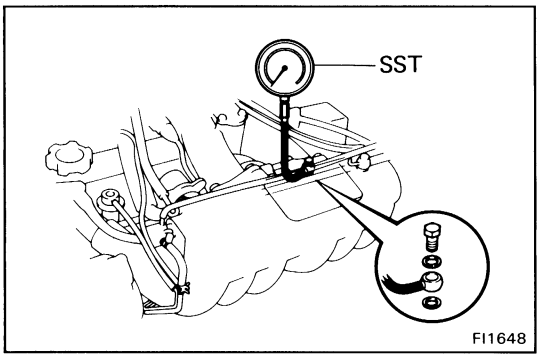

(h) Install SST (pressure gauge) to the delivery pipe with new two gaskets and union bolt.

SST 09268-45012

Torque: 300 kg-cm (22 ft-lb, 29 N·m)

(i) Wipe off any splattered gasoline.

(j) Reconnect the battery negative (−) cable.

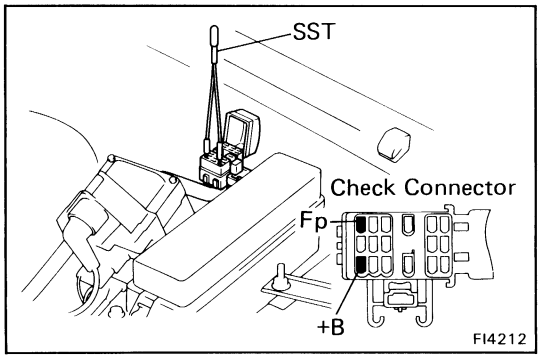

(k) Using SST, connect terminals +B and Fp of the check connector.

SST 09843-18020

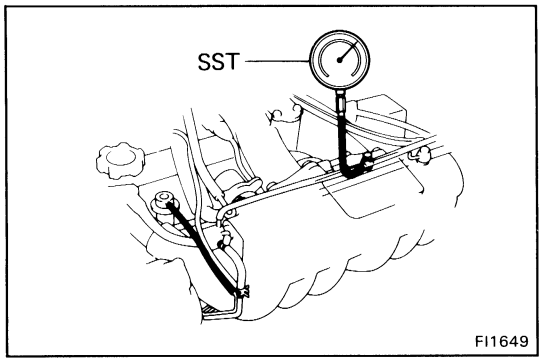

(l) Turn the ignition switch ON.

(m) Measure the fuel pressure.

Fuel pressure:
7M-GE
2.7 — 3.1 kg/cm² (38 — 44 psi, 265 — 304 kPa)
7M-GTE
2.3 — 2.8 kg/cm² (33 — 40 psi, 226 — 275 kPa)

If pressure is high, replace the fuel pressure regulator.

If pressure is low, check the following parts:

- Fuel hoses and connection
- Fuel pump
- Fuel filter
- Fuel pressure regulator

(n) Remove the SST.

SST 09843-18020

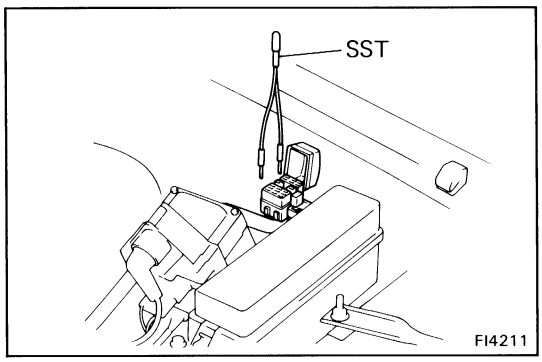

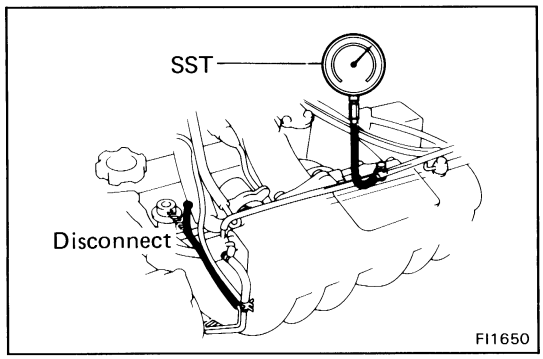

(o) Start the engine.

(p) Disconnect the vacuum sensing hose from the fuel pressure regulator and plug the hose end.

(q) Measure the fuel pressure at idling.

Fuel pressure:
7M-GE
2.7 — 3.1 kg/cm² (38 — 44 psi, 265 — 304 kPa)
7M-GTE
2.3 — 2.8 kg/cm² (33 — 40 psi, 226 — 275 kPa)

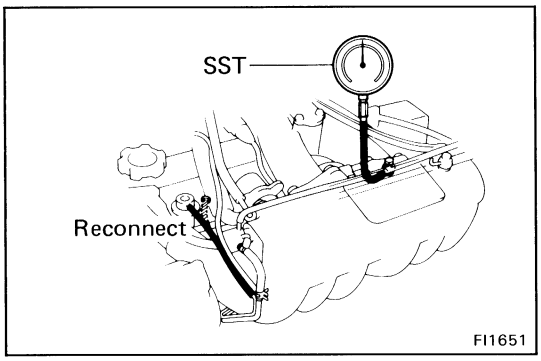

(r) Reconnect the vacuum sensing hose to the fuel pressure regulator.

(s) Measure the fuel pressure at idling.

Fuel pressure:
7M-GE
2.1 — 2.6 kg/cm² (30 — 37 psi, 206 — 265 kPa)
7M-GTE
1.6 — 2.1 kg/cm² (23 — 30 psi, 157 — 206 kPa)

If pressure is not as specified, check the vacuum sensing hose and fuel pressure regulator.

(t) Stop the engine. Check that the fuel pressure remains 1.5 kg/cm² (21 psi, 147 kPa) or more for 5 minutes after the engine is turned off.

If pressure is not as specified, check the fuel pump, pressure regulator and/or injector.

(u) After checking fuel pressure, disconnect the battery negative (—) cable and carefully remove the SST to prevent gasoline from splashing.

SST 09268-45012

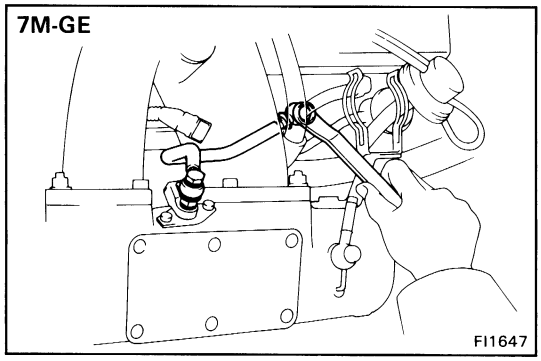

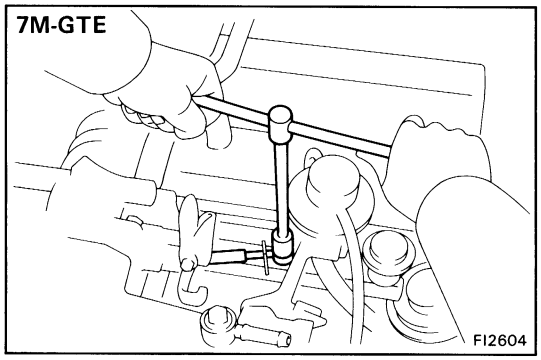

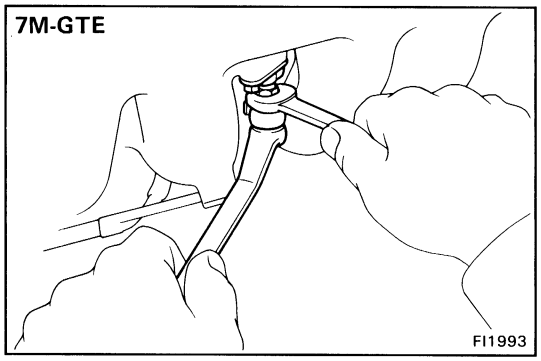

(v) (7M-GE)
Connect the cold start injector tube with new gaskets and the union bolt.

Torque: 180 kg-cm (13 ft-lb, 18 N·m)

(w) (7M-GE)
Connect the cold start injector connector.

(x) (7M-GTE)
Remove the cold start injector.
(See page FI-78)

(y) (7M-GTE)
Install the cold start injector.
(See page FI-80)

(z) (7M-GTE)
Install the cold start injector tube.

- Install the cold start injector tube to the delivery pipe and cold start injector with new gaskets and the union bolts.

Torque:
Delivery pipe side
300 kg-cm (22 ft-lb, 29 N·m)
Cold start injector side
180 kg-cm (13 ft-lb, 18 N·m)

(aa) Reconnect the cable to the negative (−) terminal of the battery.

(ab) Check for fuel leakage.

COMPONENT

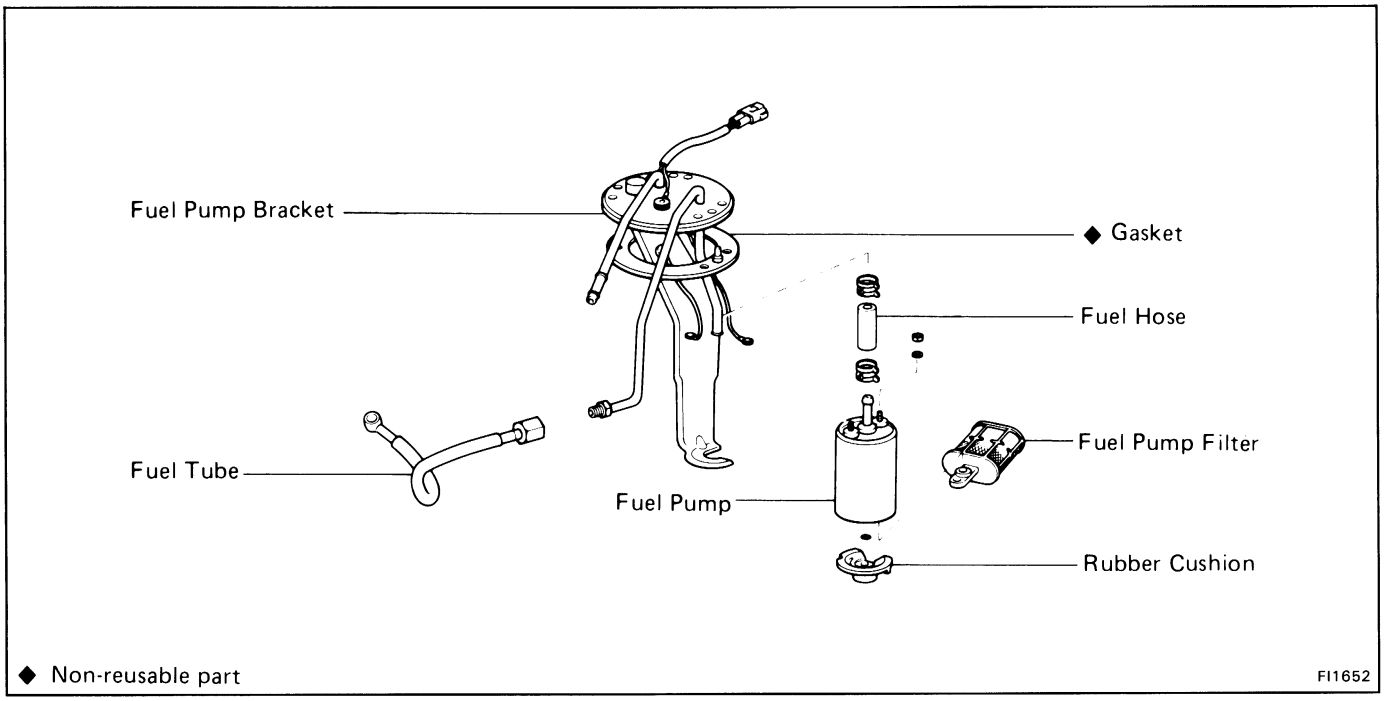

REMOVAL OF FUEL PUMP

CAUTION: Do not smoke or work near an open flame when working on the fuel pump.

1. **DISCONNECT CABLE FROM NEGATIVE TERMINAL OF BATTERY**

   CAUTION: Work must be started after approx. 20 seconds or longer from the time the ignition switch is turned to the "LOCK" position and the negative (−) terminal cable is disconnected from the battery.

2. **REMOVE FUEL TANK**
   (See procedure FI-92)

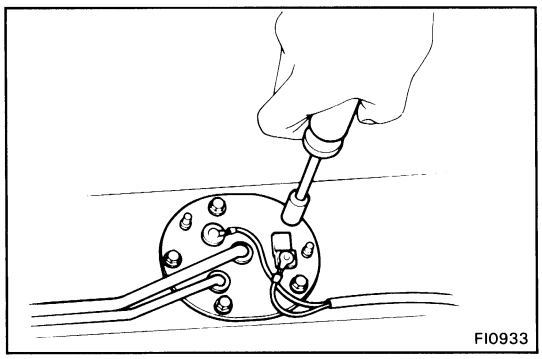

3. **REMOVE FUEL PUMP BRACKET FROM FUEL TANK**
   (a) Remove the six screws.
   (b) Pull out the fuel pump bracket.

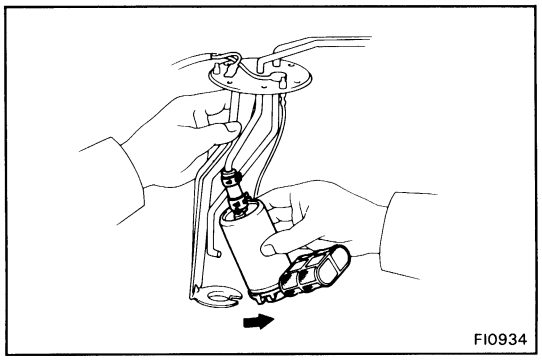

4. **REMOVE FUEL PUMP FROM FUEL PUMP BRACKET**
   (a) Remove the two nuts and disconnect the wires from the fuel pump.
   (b) Pull off the lower side of the fuel pump from the bracket.
   (c) Remove the fuel pump from the fuel hose.

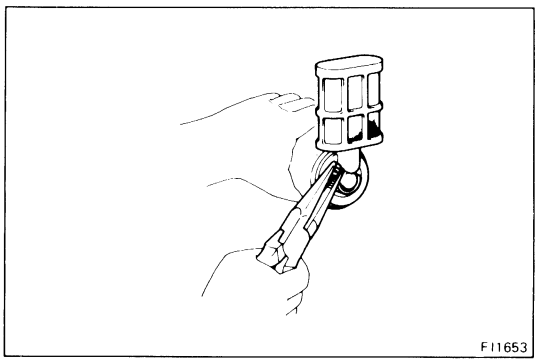

5. **REMOVE FUEL PUMP FILTER FROM FUEL PUMP**
   (a) Remove the rubber cushion.
   (b) Remove the clip and pull out the filter.

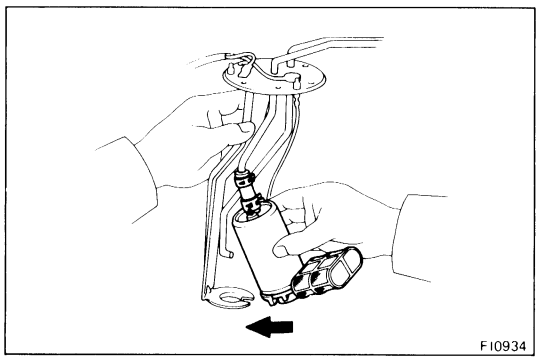

INSTALLATION OF FUEL PUMP

(See page FI-75)

1. **INSTALL FUEL PUMP FILTER TO FUEL PUMP**

2. **INSTALL FUEL PUMP TO FUEL PUMP BRACKET**
   (a) Insert the outlet port of the fuel pump into the fuel hose.
   (b) Install the rubber cushion to the lower side of the fuel pump.
   (c) Push the lower side of the fuel pump, together with the rubber cushion, into the fuel pump bracket.

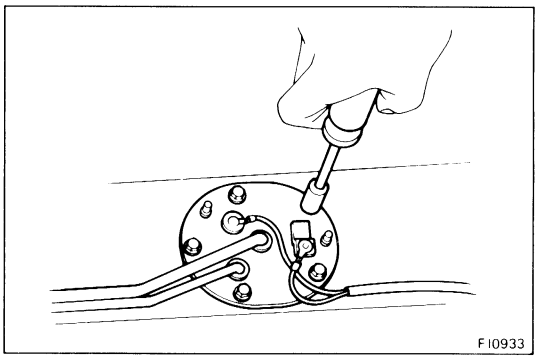

3. **INSTALL FUEL PUMP BRACKET**
   (a) Place the bracket with a new gasket on the fuel tank.
   (b) Install and torque the six screws.

   Torque: 35 kg-cm (30 in.-lb, 3.4 N·m)

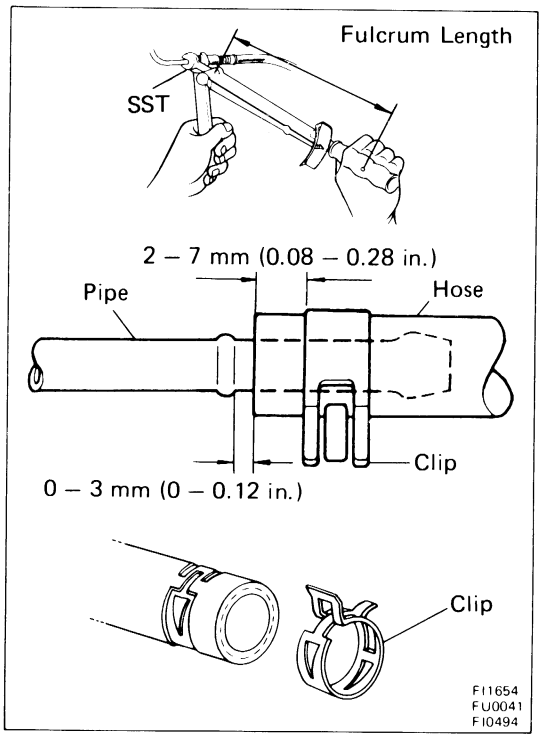

4. **INSTALL FUEL TANK**
   (a) Apply a thin coat of oil to the flare and tighten the flare nut.
   (b) Then using SST, tighten the nut to the specified torque.

   SST 09631-22020

   Torque: 310 kg-cm (22 ft-lb, 30 N·m)

   HINT: Use a torque wrench with a fulerum length 30 cm (11.81 in.).

   NOTICE:
   - **Tighten the fuel tank mounting bolts, etc. to the specified torque.**
   - **Push in the pipe and insert-type hose to the specified position, and install the clip to the specified location.**
   - **If reusing the hose, reinstall the clip at the original location.**

5. **REFILL GASOLINE**

Cold Start Injector

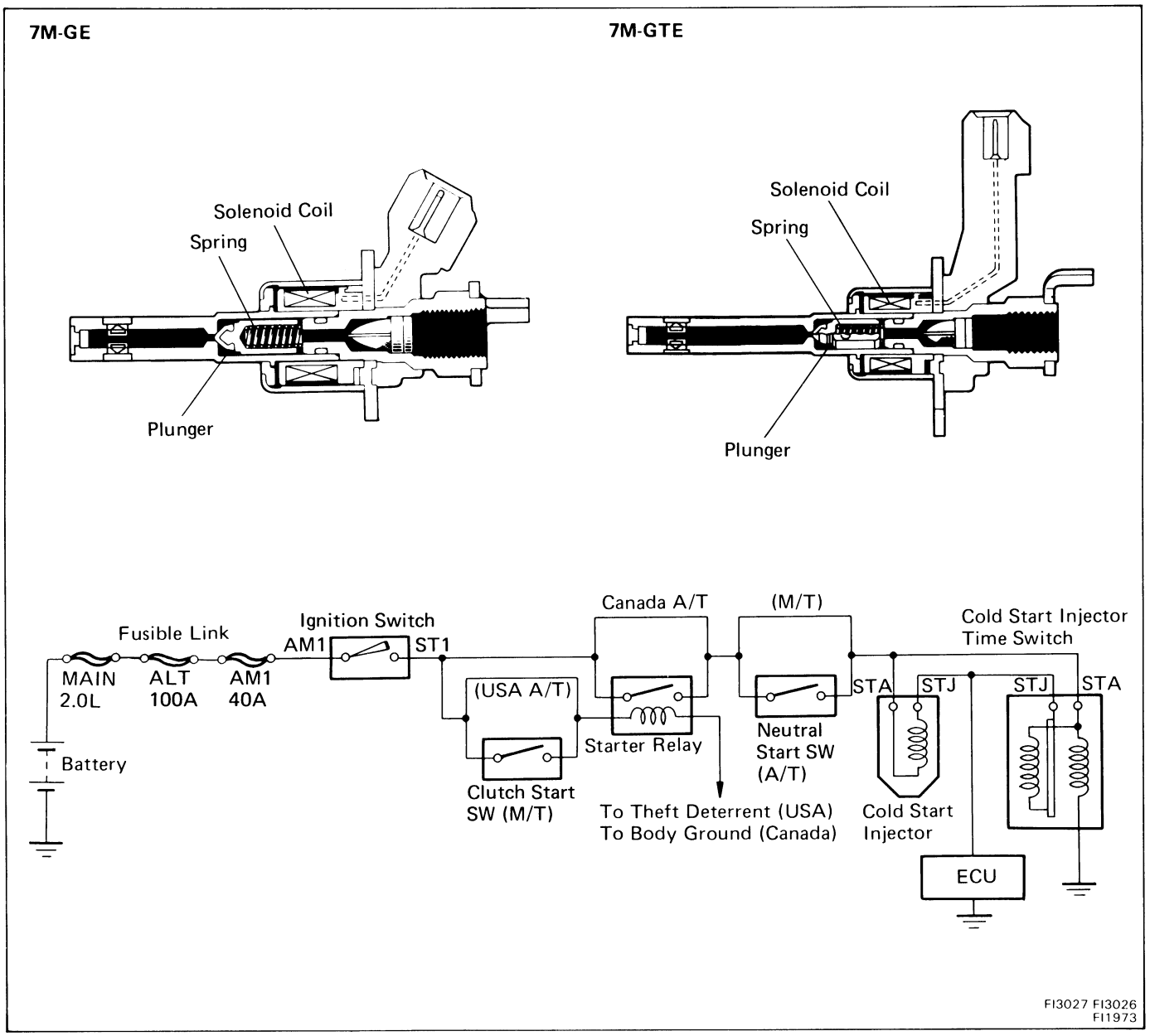

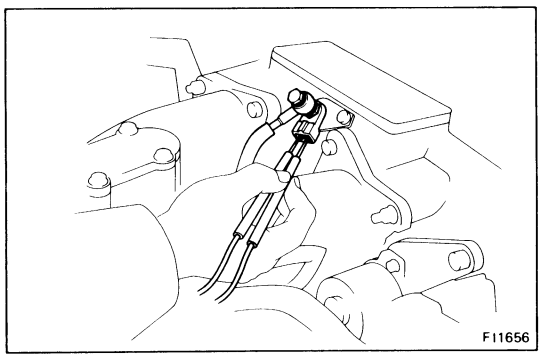

ON-VEHICLE INSPECTION (7M-GE Only)

INSPECT RESISTANCE OF COLD START INJECTOR

(a) Disconnect the cold start injector connector.

(b) Using an ohmmeter, check the resistance of the injector.

Resistance: 2 — 4 Ω

If the resistance is not as specified, replace the cold start injector.

(c) Connect the cold start injector connector.

REMOVAL OF COLD START INJECTOR

1. **DISCONNECT CABLE FROM NEGATIVE TERMINAL OF BATTERY**

   CAUTION: Work must be started after approx. 20 seconds or longer from the time the ignition switch is turned to the "LOCK" position and the negative (−) terminal cable is disconnected from the battery.

2. **(7M-GE)**
   DISCONNECT COLD START INJECTOR CONNECTOR

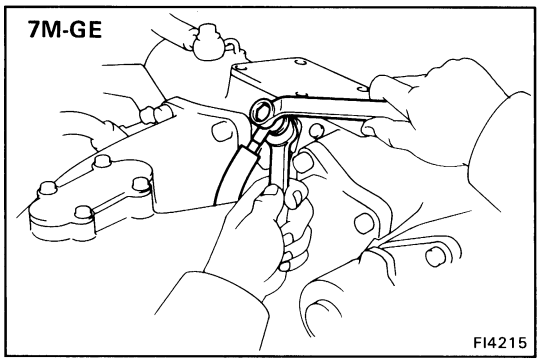

3. **DISCONNECT COLD START INJECTOR TUBE**
   (a) Put a suitable container of shop towel under the injector tube.
   (b) Remove the union bolt and two gaskets, and disconnect the injector tube from cold start injector.

   HINT: Slowly loosen the union bolt.

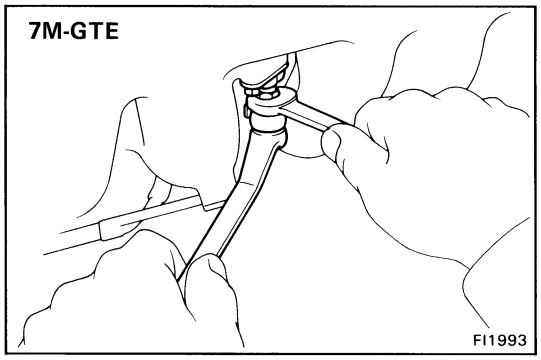

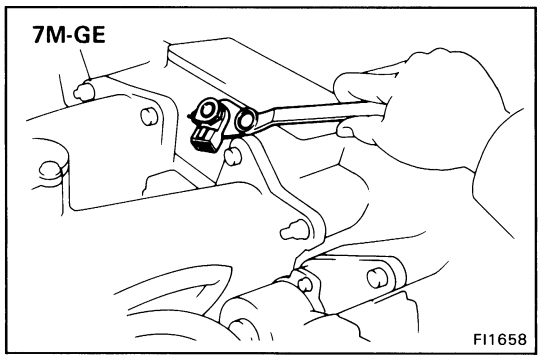

4. **REMOVE COLD START INJECTOR**

   (7M-GE)

   Remove the two blots and cold start injector with the gasket.

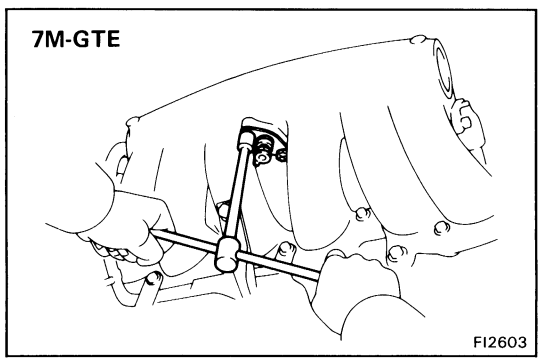

   (7M-GTE)

   Remove the two bolts and cold start injector with the gasket, and disconnect the cold start injector connector.

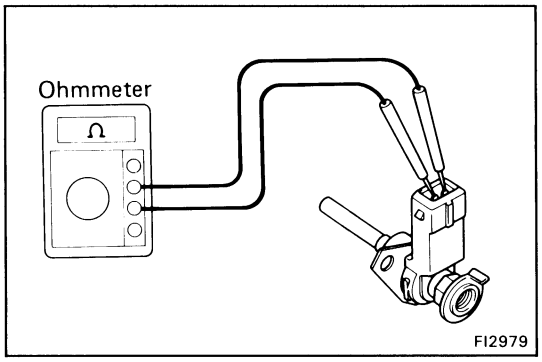

INSPECTION OF COLD START INJECTOR

1. **(7M-GTE)**
INSPECT RESISTANCE OF COLD START INJECTOR

Using an ohmmeter, check the resistance of the injector.

Resistance: 2 — 4 Ω

If the resistance is not as specified, replace the cold start injector.

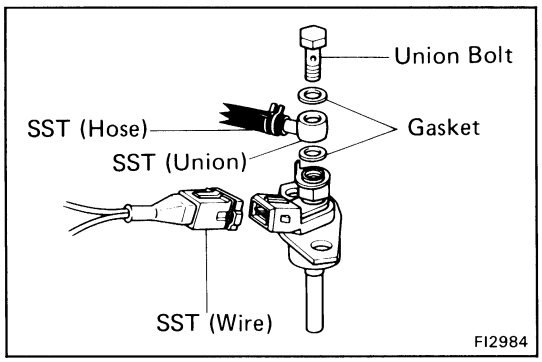

2. **INSPECT INJECTION OF COLD START INJECTOR**

CAUTION: Keep clear of sparks during the test.

(a) Install SST (two unions) to the injector and delivery pipe with new gaskets and the union bolts.

SST 09268-41045 (09268-41080, 90405-09015)

(b) Connect the SST (hose) to the unions.

SST 09268-41045

(c) Connect the SST (wire) to the injector.

SST 09842-30050

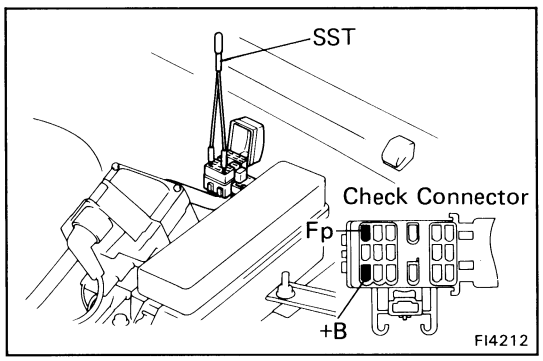

(d) Put a container under the injector.

(e) Reconnect the battery negative (—) terminal.

(f) Turn the ignition switch ON.

HINT: Do not start the engine.

(g) Using SST, connect terminals +B and Fp of the check connector.

SST 09843-18020

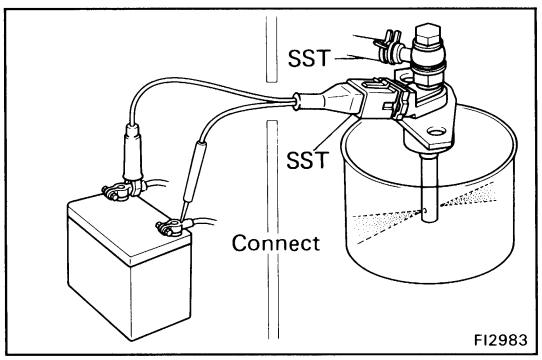

(h) Connect the test probes of the SST (wire) to the battery, and check that the fuel spray is as shown.

SST 09842-30050

NOTICE: Perform this check within the shortest possible time.

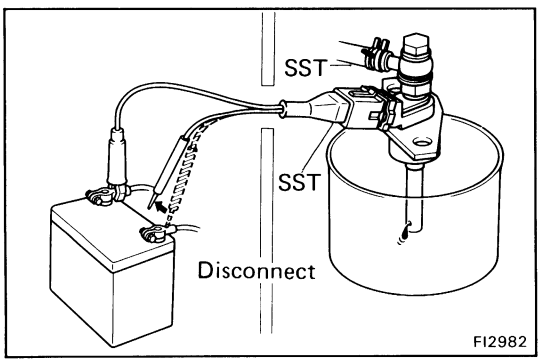

3. **INSPECT LEAKAGE**

(a) In the condition above, disconnect the test probes of SST (wire) from the battery and check fuel leakage from the injector.

SST 09842-30050

Fuel drop: One drop or less per minute

(b) Disconnect the battery negative (—) cable.

(c) Remove SST.

SST 09268-41045 (09268-41080, 90405-09015), 09843-18020 and 09842-30050

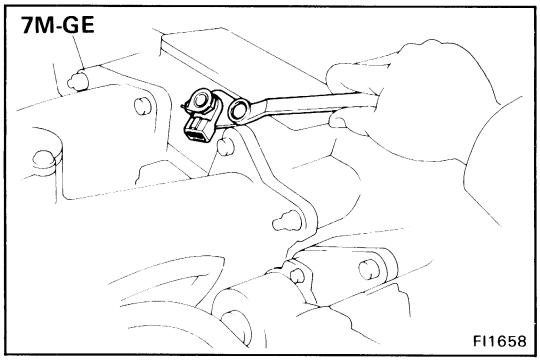

INSTALLATION OF COLD START INJECTOR

1. INSTALL COLD START INJECTOR

(7M-GE)

Install the cold start injector with a new gasket and the two bolts.

Torque: 55 kg-cm (48 in.-lb, 5.4 N·m)

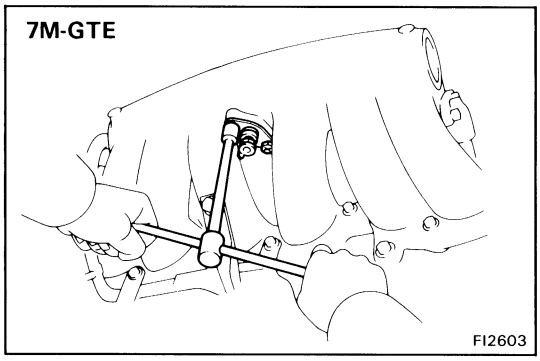

(7M-GTE)

(a) Connect the cold start injector connector to the cold start injector.

(b) Install the cold start injector with a new gasket and the two bolts.

Torque: 55 kg-cm (48 in.-lb, 5.4 N·m)

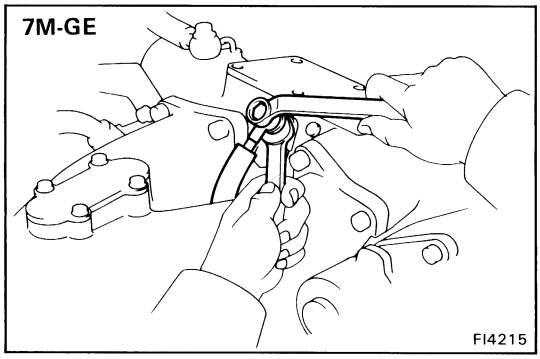

2. CONNECT COLD START INJECTOR TUBE

Connect the cold start injector tube to the cold start injector with new gaskets and union bolt.

Torque: 180 kg-cm (13 ft-lb, 18 N·m)

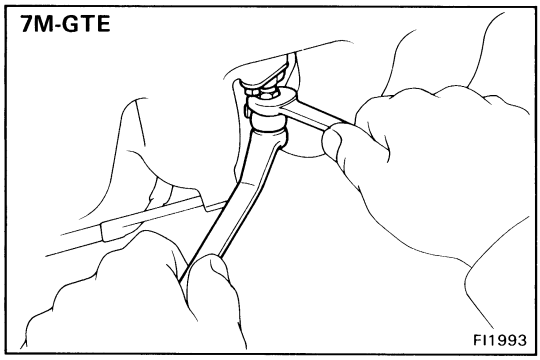

3. (7M-GE)
CONNECT COLD START INJECTOR CONNECTOR

4. CONNECT CABLE TO NEGATIVE TERMINAL OF BATTERY

5. CHECK FOR FUEL LEAKAGE

Fuel Pressure Regulator

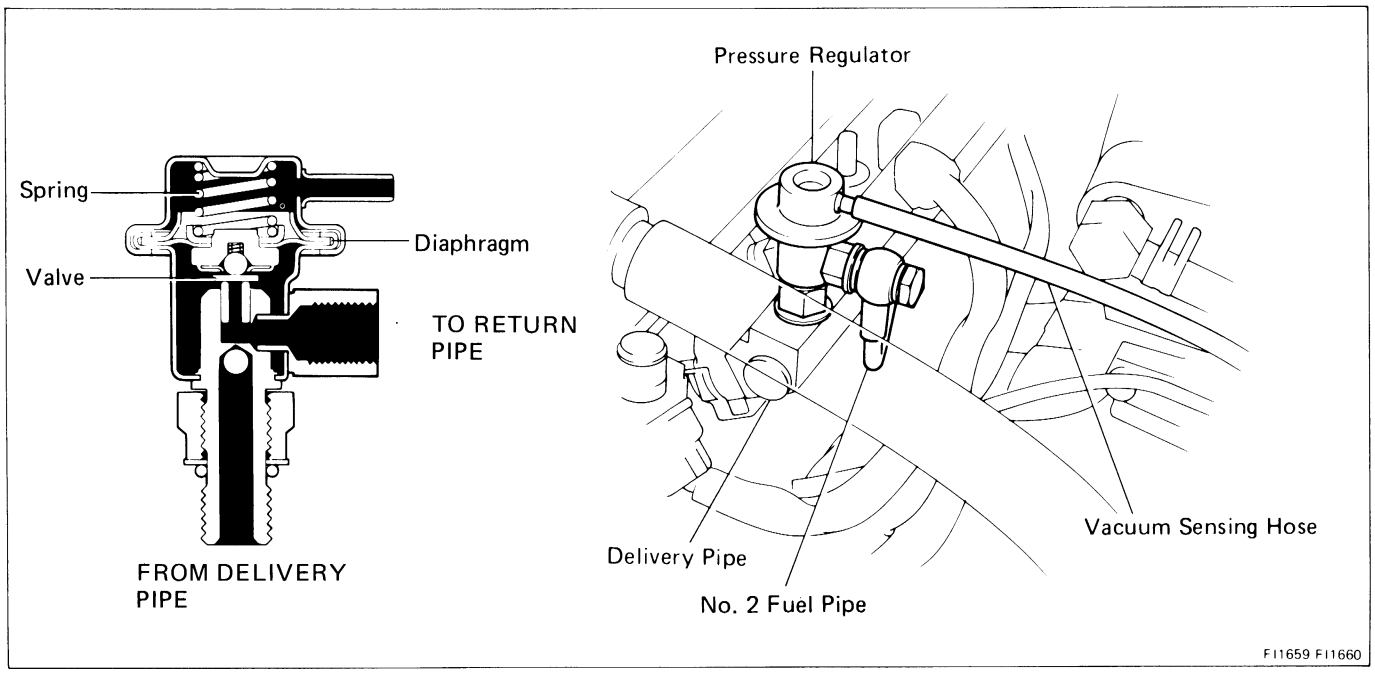

ON-VEHICLE INSPECTION

CHECK FUEL PRESSURE (See page FI-71)

REMOVAL OF PRESSURE REGULATOR

1. **DISCONNECT NO.3 PCV HOSE**
2. **DISCONNECT VACUUM SENSING HOSE**

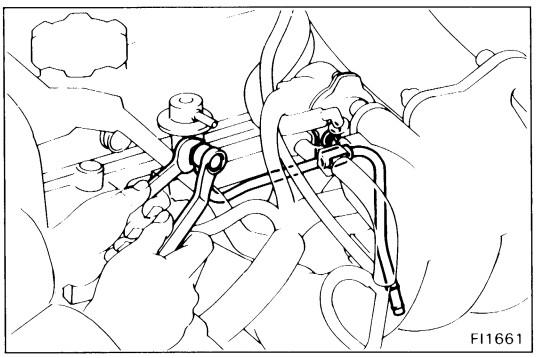

3. **DISCONNECT NO.2 FUEL PIPE**
   (a) Place a suitable container or shop towel under the pressure regulator.
   (b) Remove the union bolt and two gaskets.
   (c) Remove the clamp bolt of the No.2 fuel pipe.

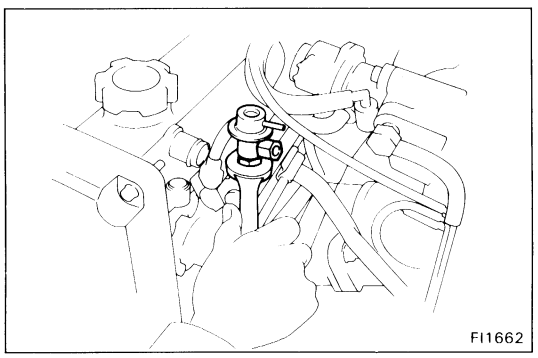

4. **REMOVE PRESSURE REGULATOR**
   Loosen the lock nut, and remove the pressure regulator.

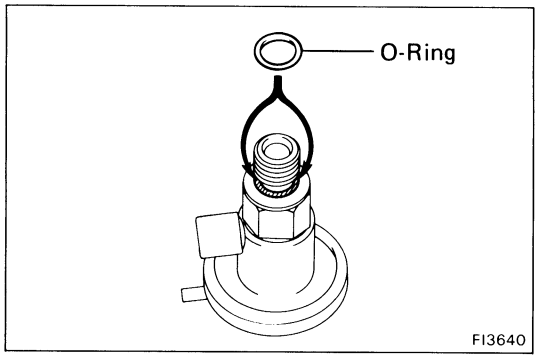

INSTALLATION OF FUEL PRESSURE REGULATOR

1. INSTALL FUEL PRESSURE REGULATOR

(a) Fully loosen the lock nut of the pressure regulator.

(b) Apply a light coat of gasoline to a new O-ring, and install it to the pressure regulator.

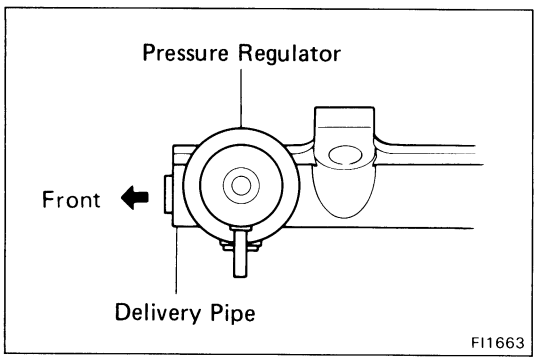

(c) Thrust the pressure regulator completely into the delivery pipe by hand.

(d) Turn the pressure regulator counterclockwise until the vacuum pipe faces in the direction indicated in the figure.

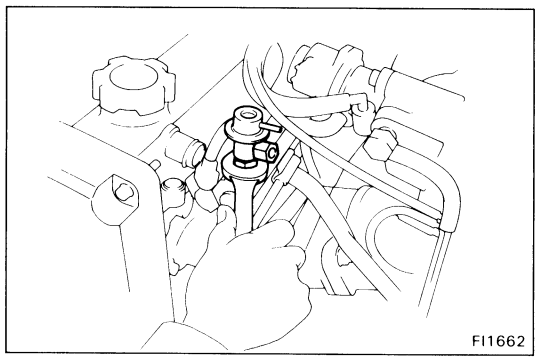

(e) Torque the lock nut.

Torque: 250 kg-cm (18 ft-lb, 25 N·m)

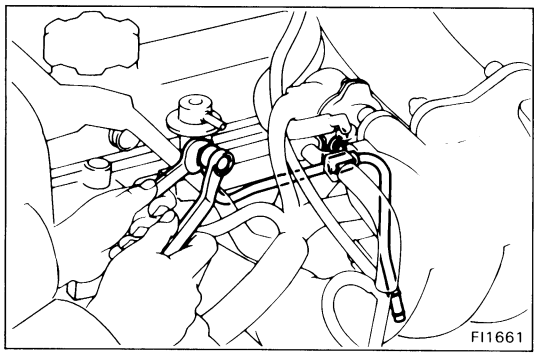

2. CONNECT NO.2 FUEL PIPE

Connect the No.2 fuel pipe to the pressure regulator with new gaskets and union bolt.

Torque: 250 kg-cm (18 ft-lb, 25 N·m)

3. CONNECT VACUUM SENSING HOSE

4. CONNECT NO.3 PCV HOSE

5. CHECK FOR FUEL LEAKAGE (See page FI-11)

Injectors

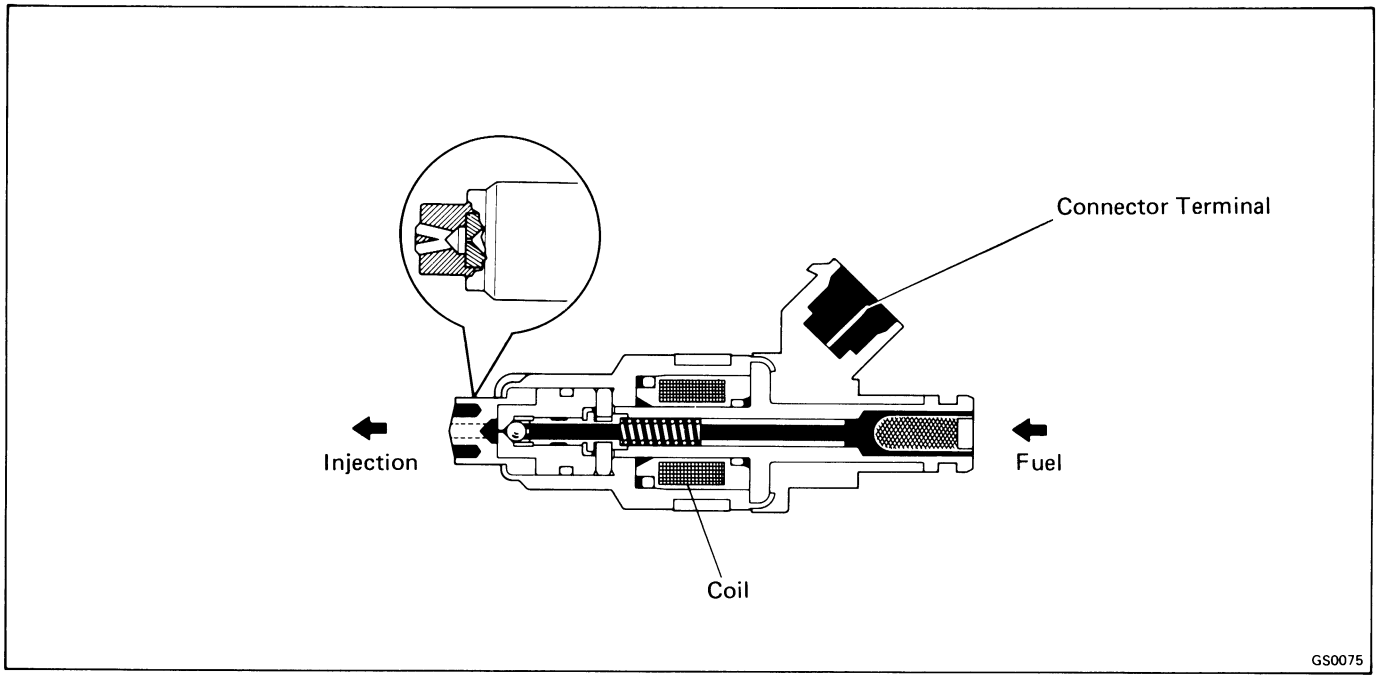

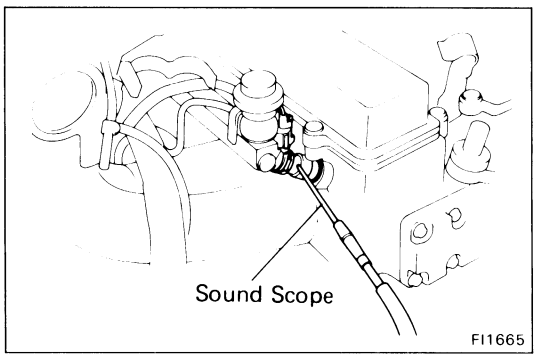

ON-VEHICLE INSPECTION

1. CHECK INJECTOR OPERATION

Check the operating sound from each injector.

(a) With the engine running or cranking, use a sound scope to check that there is normal operating noise in proportion to engine rpm.

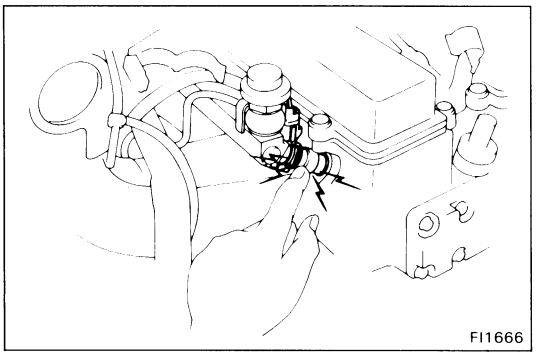

(b) If you have no sound scope, you can check the injector transmission operation with your finger.

If no sound or an unusual sound is heard, check the wiring connector, injector, resistor (7M-GTE) or injection signal from the ECU.

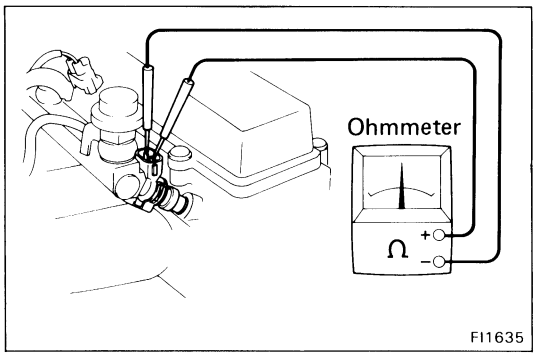

2. INSPECT RESISTANCE OF INJECTOR

(a) Disconnect the injector connector.

(b) Using an ohmmeter, check the resistance of both terminals.

Resistance:

7M-GE	**Approx. 13.8 Ω**
7M-GTE	**2.0 — 3.8 Ω**

If the resistance is not as specified, replace the injector.

(c) Reconnect the injector connector.

REMOVAL OF INJECTORS

1. **DISCONNECT CABLE FROM NEGATIVE TERMINAL OF BATTERY**

   CAUTION: Work must be started after approx. 20 seconds or longer from the time the ignition switch is turned to the "LOCK" position and the negative (−) terminal cable is disconnected from the battery.

2. **DRAIN COOLANT**

3. **DISCONNECT FOLLOWING HOSES:**
   - Water hoses from throttle body (7M-GE) or water by-pass pipe (7M-GTE)
   - Vacuum hoses from throttle body
   - ISC valve hoses from throttle body
   - Vacuum hose from pressure regulator

4. **DISCONNECT FOLLOWING CONNECTORS:**
   - Throttle position sensor connector
   - ISC valve connector
   - (7M-GE)
     Cold start injector connector

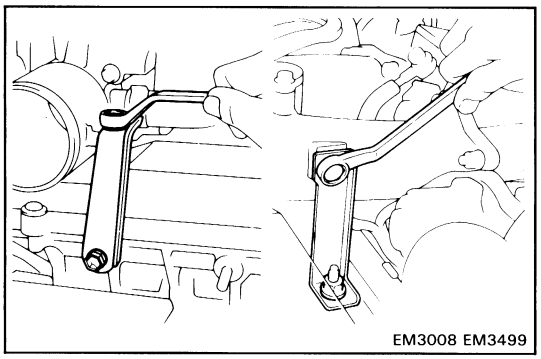
EM3008 EM3499

5. **DISCONNECT ACCELERATOR CONNECTING ROD**

6. **REMOVE AIR INTAKE CONNECTOR**

   (7M-GE)

   (a) Disconnect the air cleaner hose from the throttle body.

   (b) Remove the throttle body and air intake connector brackets.

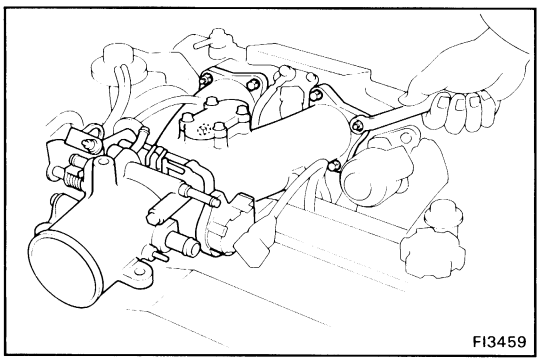
FI3459

   (c) Remove the four bolts and two nuts, intake connector and gasket.

   (7M-GTE)
   (See steps 1 to 5 on page EM-12)

7. **(7M-GTE)**
   REMOVE THROTTLE BODY
   (See step 6 on page FI-102)

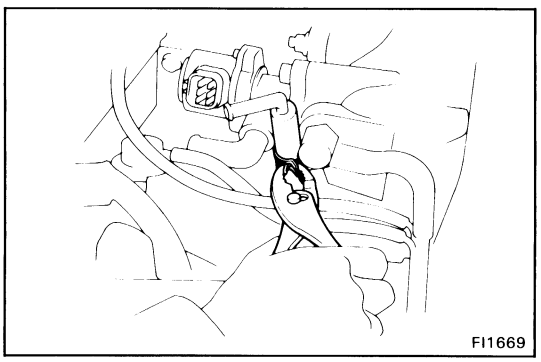
FI1669

8. **REMOVE ISC VALVE**

   (a) Disconnect the No.1 water by-pass hose from the ISC valve.

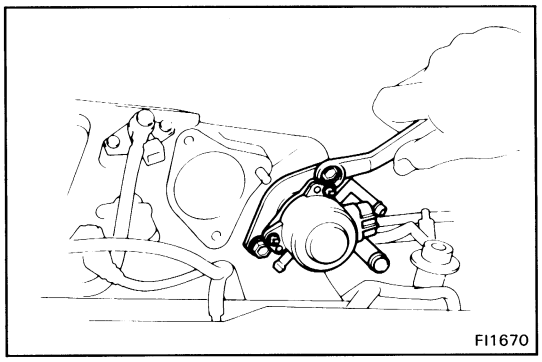

(b) Remove the two bolts, ISC valve and gasket.

9. DISCONNECT INJECTOR CONNECTORS

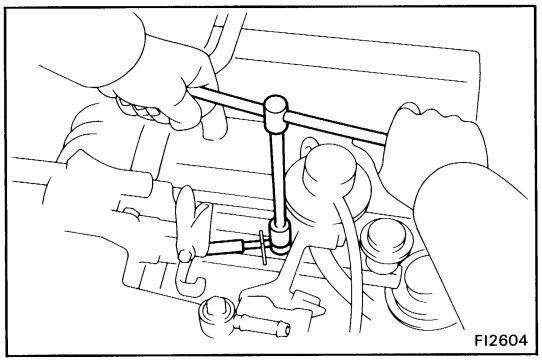

10. DISCONNECT COLD START INJECTOR TUBE FROM DELIVERY PIPE

(a) Put a suitable container or shop towel under the injector tube.

(b) Remove the union bolt and two gaskets, and disconnect the injector tube.

HINT: Slowly loosen the union bolt.

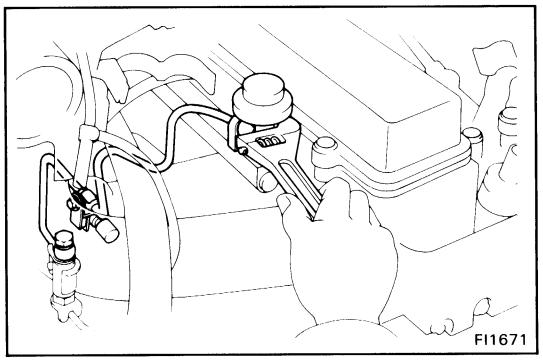

11. REMOVE NO.1 FUEL PIPE

(a) Remove the union bolt (7M-GE) or pulsation damper (7M-GTE) and two gaskets from the delivery pipe.

(b) Remove the union bolt and two gaskets from the fuel support.

(c) Remove the clamp bolt and No.1 fuel pipe with VSV.

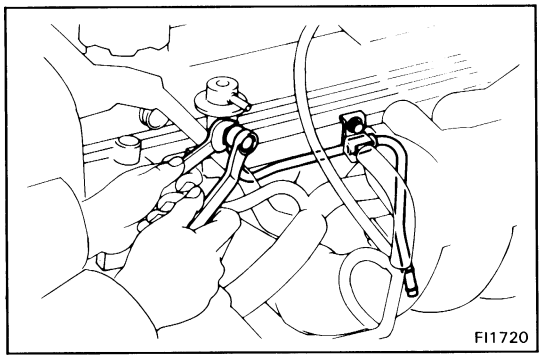

12. REMOVE NO.2 FUEL PIPE

(a) Disconnect the fuel hose from the No.2 fuel pipe.

(b) Remove the union bolt and two gaskets from the pressure regulator.

(c) Remove the clamp bolt and No.2 fuel pipe.

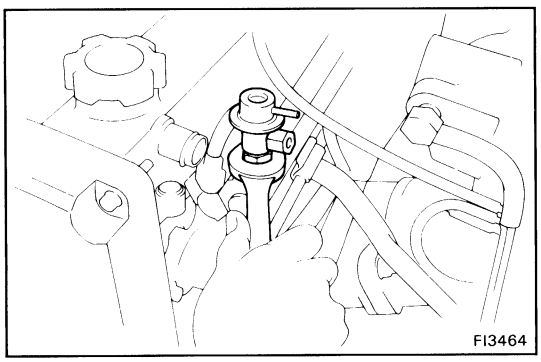

13. REMOVE PRESSURE REGULATOR

Loosen the lock nut remove the pressure regulator.

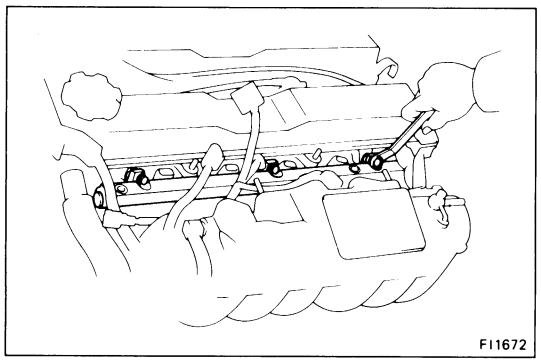

14. REMOVE DELIVERY PIPE

(a) Remove the three bolts, and then remove the delivery pipe with the injectors.

NOTICE: Be careful not to drop the injectors.

(b) Remove the six insulators and three spacers from the cylinder head.

15. REMOVE INJECTORS

(a) Pull out the injectors from the delivery pipe.

(b) Remove the O-ring from the injector.

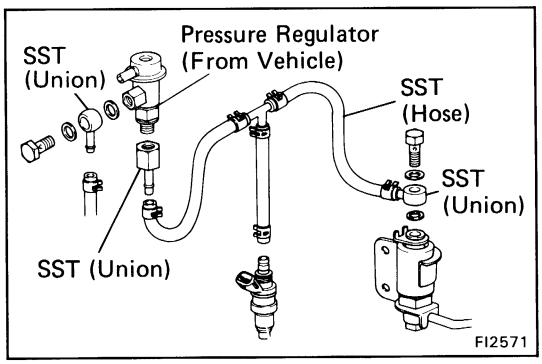

INSPECTION OF INJECTORS

1. INSPECT INJECTOR INJECTION

CAUTION: Keep clear of sparks during the test.

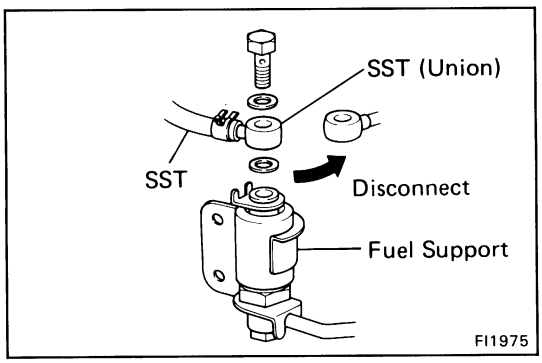

(a) Disconnect the No.1 fuel pipe from the fuel return pipe support.

(b) Connect SST (union) to the fuel return pipe suppot.

SST 09268-41045 (90405-09015)

HINT: Use the vehicle's fuel support.

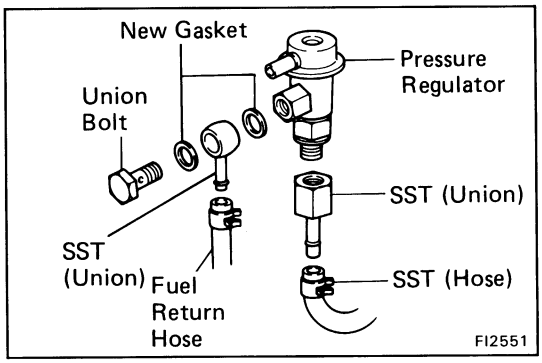

(c) Connect the fuel return hose to the pressure regulator with SST (union), new gasket and union bolt.

SST 09268-41045 (09268-41080)

(d) Connect SST (hose) to the pressure regulator with SST (union).

SST 09268-41045 (09268-52010)

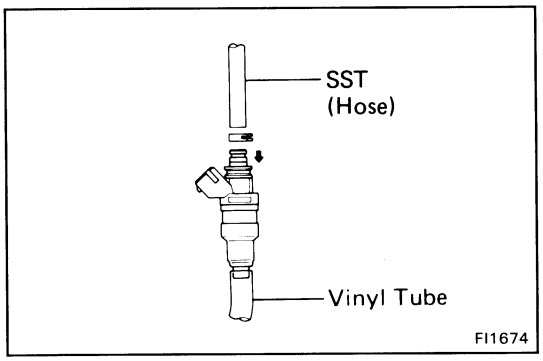

(e) Connect SST (hose) to the injector.

SST 09268-41045

(f) Put the injector into the graduated cylinder.

HINT: Install a suitable vinyl tube onto the injector to prevent gasoline from splashing out.

(g) Connect the battery cable.

(h) Turn the ignition switch ON.

HINT: Do not start the engine.

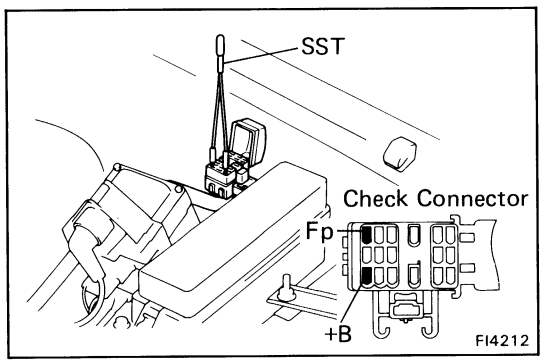

(i) Using SST, connect terminals +B and Fp of the check connector.

SST 09843-18020

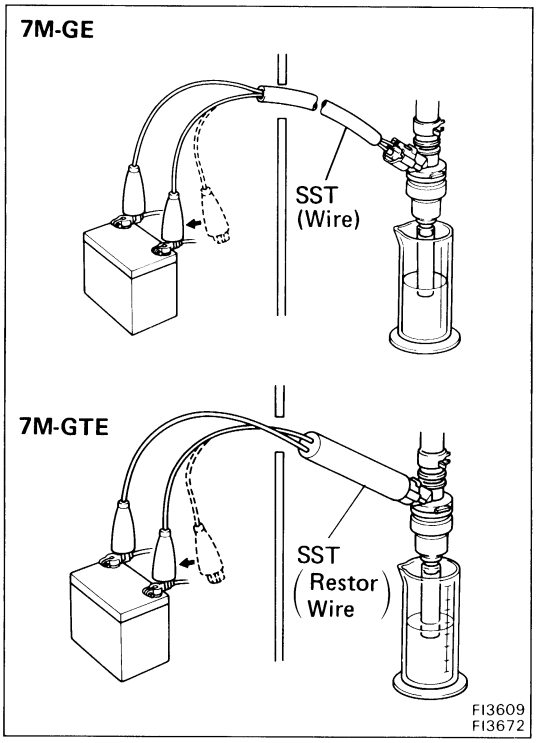

(j) Connect SST (inspection wire) to the injector and battery for 15 seconds, and measure the injection volume with a graduated cylinder. Test each injector two or three times.

SST 7M-GE 09842-30070
7M-GTE 09842-30060

Injection volume:
7M-GE
69 — 85 cc (4.2 — 5.2 cu in.) per 15 sec.
7M-GTE
101 — 114 cc (6.2 — 7.0 cu in.) per 15 sec.

Difference between each injector:
9 cc (0.5 cu in.) or less

If the injection volume is not as specified, replace the injector.

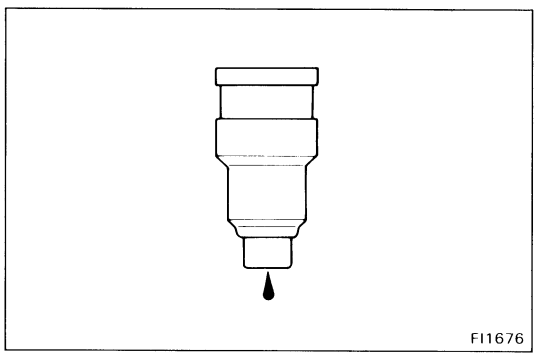

2. INSPECT LEAKAGE

(a) In the condition above, disconnect the test probes of SST (inspection wire) from the battery and check the fuel leakage from the injector.

SST 7M-GE 09842-30070
7M-GTE 09842-30060

Fuel drop: One drop or less per minute.

(b) Disconnect the battery negative (—) cable.

(c) Remove SST.

SST 09268-41045 (09268-41080, 09268-52010, 90405-09015) and 09843-18020

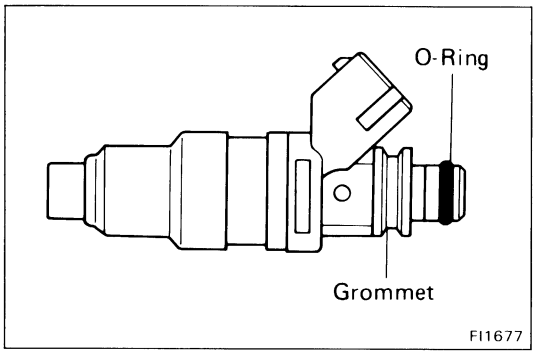

INSTALLATION OF INJECTORS

1. INSTALL INJECTORS INTO DELIVERY PIPE

(a) Install a new grommet to the injector.

(b) Apply a light coat of gasoline to a new O-ring and install it to the injector.

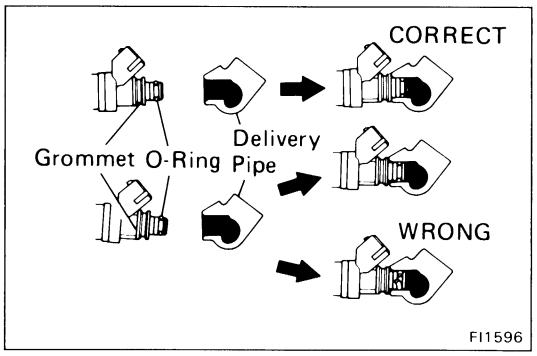

(c) While turning the injector left and right, install it to the delivery pipe. Install the six injectors.

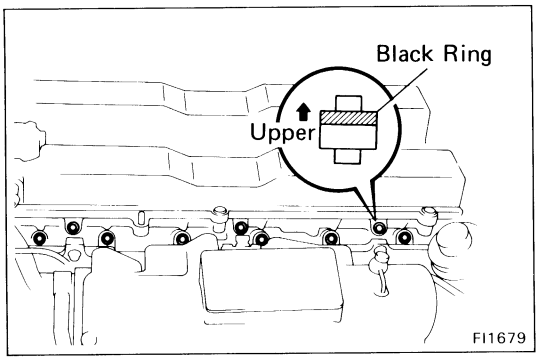

2. INSTALL DELIVERY PIPE WITH INJECTORS

(a) Install the six insulators into the injector hole of the cylinder head.

(b) Install the black rings on the upper portion of each of the three spacers. Then install the spacers on the delivery pipe mounting hole of the cylinder head.

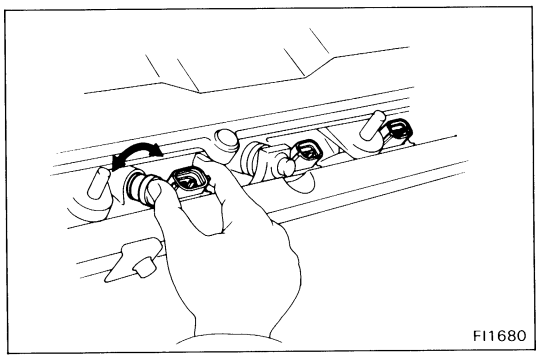

(c) Place the injectors together with the delivery pipe on the cylinder head.

(d) Check that the injectors rotate smoothly.

HINT: If the injectors do not rotate smoothly, the probable cause is incorrect installation of O-rings. Replace O-rings.

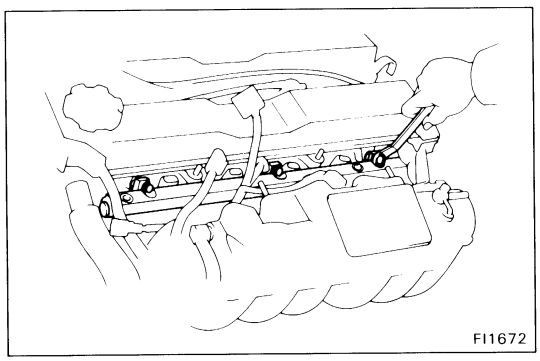

(e) Install the three spacers and bolts.
Torque the bolts.

Torque: 180 kg-cm (13 ft-lb, 18 N·m)

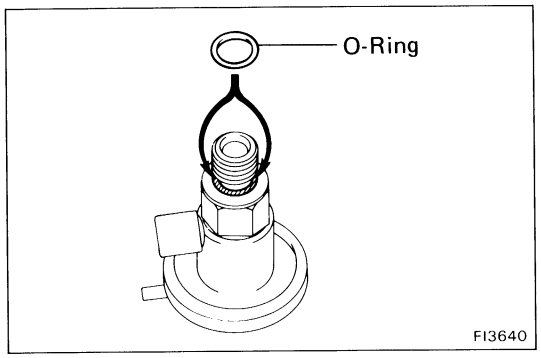

3. INSTALL PRESSURE REGULATOR

(a) Fully loosen the lock nut of the pressure regulator.

(b) Apply a light coat of gasoline to a new O-ring, and install it to the pressure regulator.

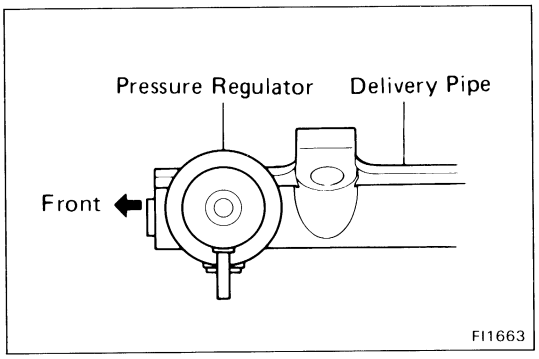

(c) Thrust the pressure regulator completely into the delivery pipe by hand.

(d) Turn the pressure regulator counterclockwise until the outlet faces in the direction indicated in the illustration.

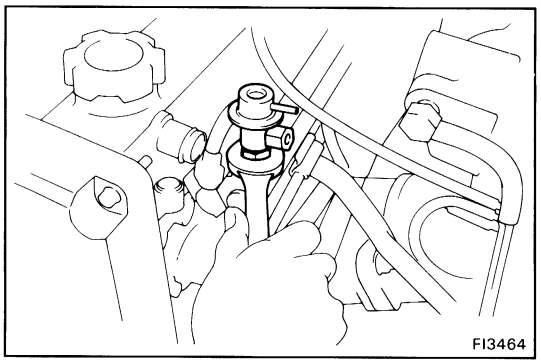

(e) Torque the lock nut.

Torque: 250 kg-cm (18 ft-lb, 25 N·m)

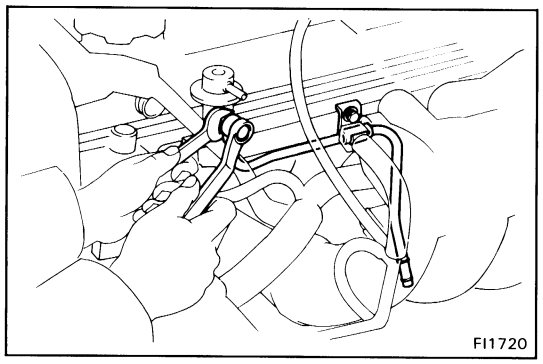

4. INSTALL NO.2 FUEL PIPE

(a) Install the No.2 fuel pipe and clamp bolt.

(b) Install the union bolt and new two gaskets to the pressure regulator. Torque the union bolt.

Torque: 250 kg-cm (18 ft-lb, 25 N·m)

(c) Connect the fuel hose.

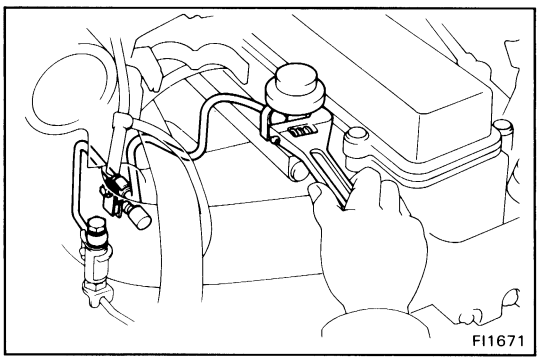

5. INSTALL NO.1 FUEL PIPE

(a) Install the No.1 fuel pipe with VSV with the clamp bolt.

(b) Connect the pipe to the fuel pipe support with the union bolt and new gaskets. Torque the union bolts.

Torque: 300 kg-cm (22 ft-lb, 29 N·m)

(c) Connect the pipe to the delivery pipe with the union bolt (7M-GE) or pulsation damper (7M-GTE) and new gaskets. Torque the union bolt or pulsation damper.

Torque: 400 kg-cm (29 ft-lb, 39 N·m)

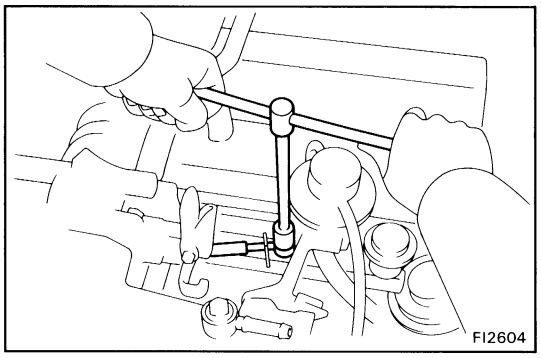

6. CONNECT INJECTOR CONNECTORS

7. CONNECT COLD START INJECTOR TUBE TO DELIVERY PIPE

Torque: 300 kg-cm (22 ft-lb, 29 N·m)

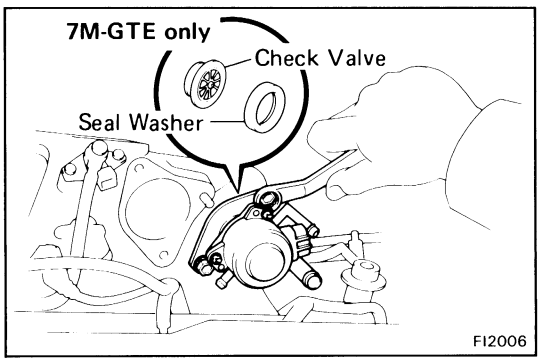

8. INSTALL ISC VALVE

(a) Install a new gasket and ISC valve with the two bolts.

Torque: 130 kg-cm (9 ft-lb, 13 N·m)

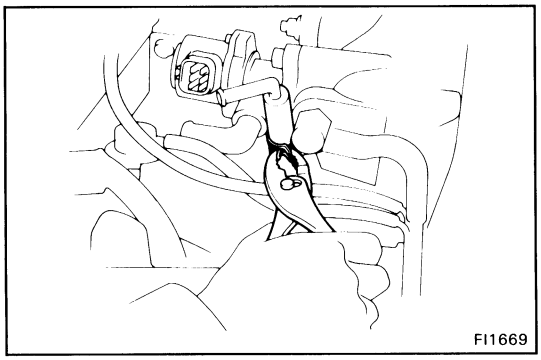

(b) Connect No.1 water by-pass hose to the ISC valve.

9. (7M-GTE)

INSTALL THROTTLE BODY
(See step 1 on page FI-104)

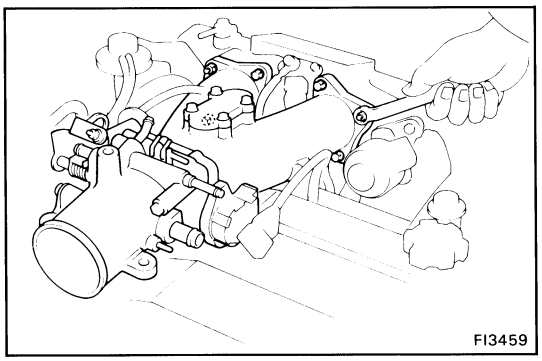

10. INSTALL AIR INTAKE CONNECTOR

(7M-GE)

(a) Install a new gasket and air intake connector with the four bolts and two nuts.

Torque: 180 kg-cm (13 ft-lb, 18 N·m)

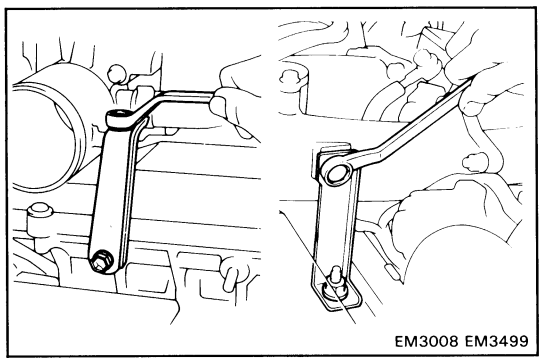

(b) Install the air intake connector and throttle body bracket.

(c) Connect the air cleaner hose to the throttle body.

(7M-GTE)
(See steps 15 to 19 on pages EM-14, 15)

11. CONNECT ACCELERATOR CONNECTING ROD

12. CONNECT FOLLOWING CONNECTORS:

- Throttle position sensor connector
- ISC valve connector
- (7M-GE)
  Cold start injector connector

13. CONNECT FOLLOWING HOSES:

- Water hoses from throttle body (7M-GE) or water by-pass pipe (7M-GTE)
- Vacuum hoses from throttle body
- ISC valve hoses from throttle body
- Vacuum hose from pressure regulator

14. REFILL COOLANT (See page CO-5)

15. CONNECT CABLE TO NEGATIVE TERMINAL OF BATTERY

16. CHECK FOR FUEL LEAKAGE

Fuel Tank and Line

COMPONENTS

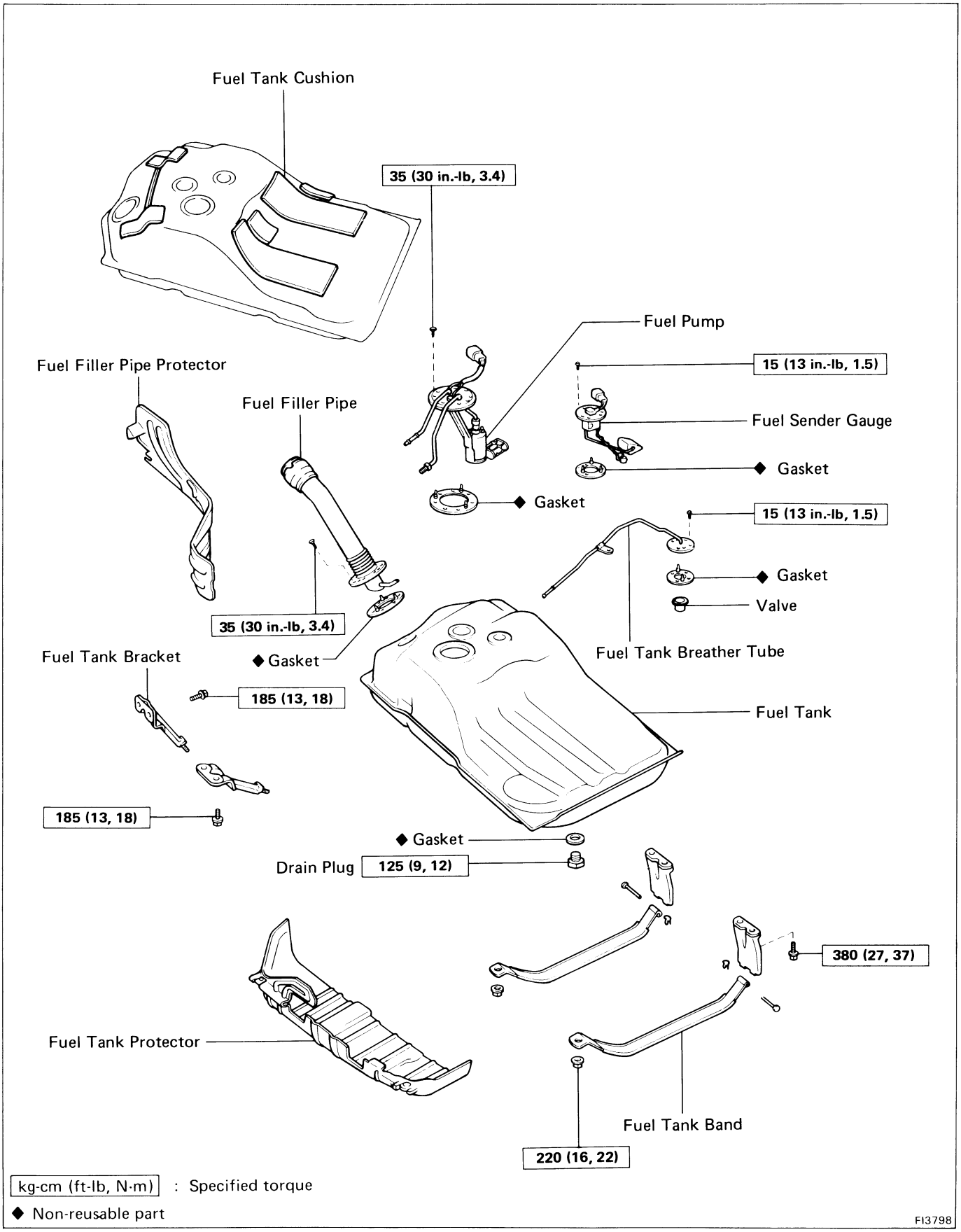

PRECAUTIONS

1. **Always use new gaskets when replacing the fuel tank or component part.**
2. **Apply the proper torque to all parts tightened.**

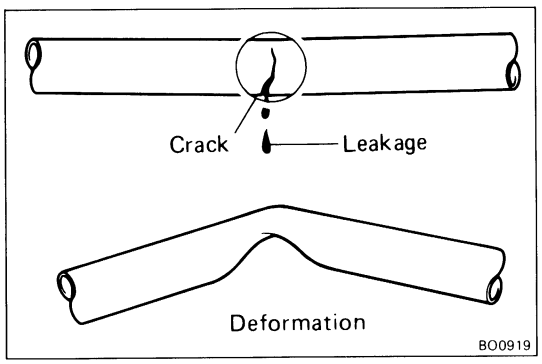

INSPECT FUEL LINES AND CONNECTIONS

(a) Inspect the fuel lines for cracks or leakage, and all connections for deformations.

(b) Inspect the fuel tank vapor vent system hoses and connections for looseness, sharp bends or damage.

(c) Inspect the fuel tank for deformations, cracks fuel leakage or tank band looseness.

(d) Inspect the filler neck for damage or fuel leakage.

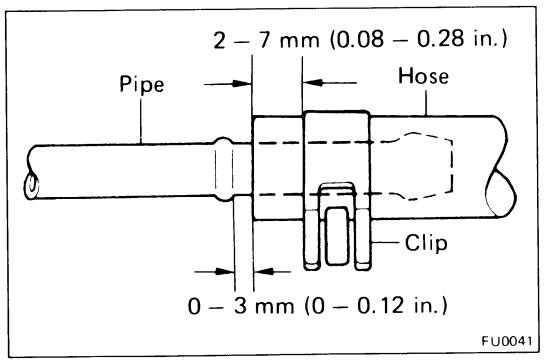

(e) Hose and tube connections are as shown in the illustration.

If a problem is found, repair or replace the parts as necessary.

AIR INDUCTION SYSTEM

Air Flow Meter (7M-GE)

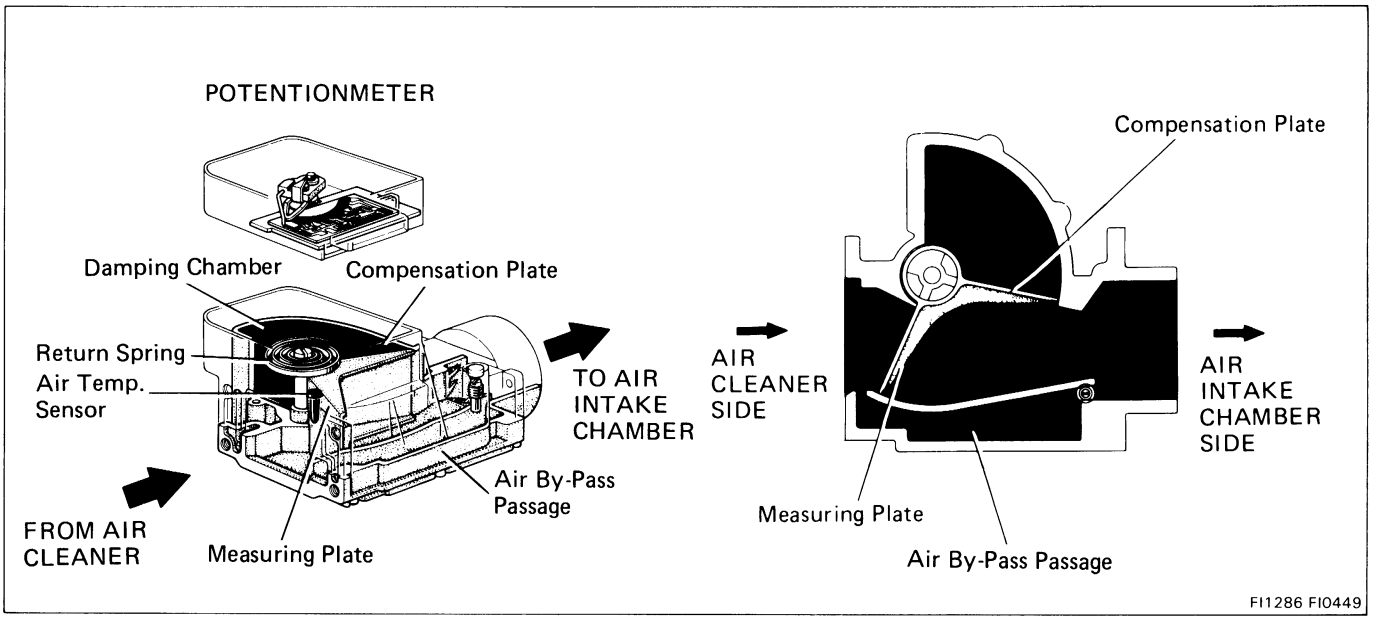

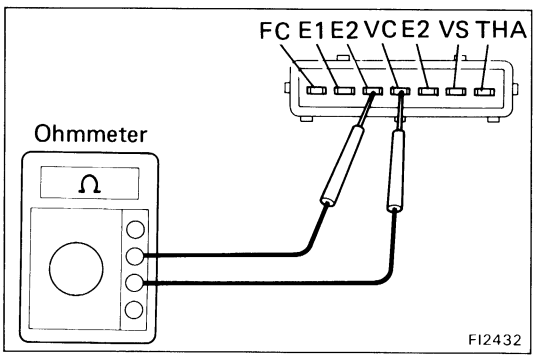

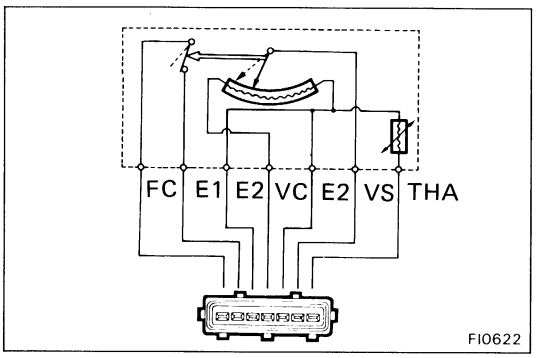

ON-VEHICLE INSPECTION

INSPECT RESISTANCE OF AIR FLOW METER

(a) Disconnect the air flow meter connector.

(b) Using an ohmmeter, measure the resistance between each terminal.

Between terminals	Resistance (Ω)	Temp. °C (°F)
E2 – VS	200 – 600	–
E2 – VC	200 – 400	–
E2 – THA	10,000 – 20,000 4,000 – 7,000 2,000 – 3,000 900 – 1,300 400 – 700	–20 (–4) 0 (32) 20 (68) 40 (104) 60 (140)
E1 – FC	Infinity	–

If the resistance is not as specified, replace the air flow meter.

(c) Reconnect the ait flow meter connector.

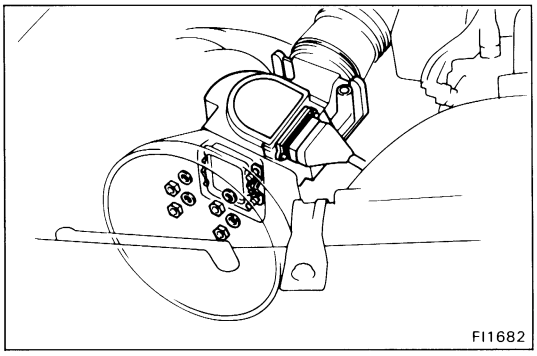

REMOVAL OF AIR FLOW METER

1. **DISCONNECT AIR FLOW METER CONNECTOR**
2. **DISCONNECT NO.2 AIR CLEANER HOSE**
3. **REMOVE AIR CLEANER CAP**

   Remove the two bolts and cap.
4. **REMOVE AIR FLOW METER**

   Pry off the lock plates, and remove the four nuts, and air flow meter.

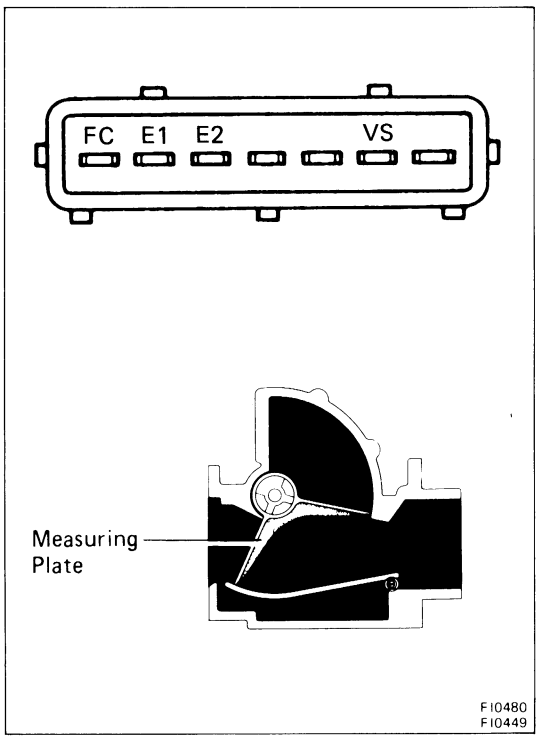

INSPECTION OF AIR FLOW METER

INSPECT RESISTANCE OF AIR FLOW METER

Using an ohmmeter, measure the resistance between each terminal by moving the measuring plate.

Terminals	Resistance Ω	Measuring plate opening
FC – E1	Infinity	Fully closed
	Zero	Other than closed position
VS – E2	200 – 600	Fully closed
	20 – 1,200	Fully open

HINT: Resistance between VS and E2 will change in a wave pattern as the measuring plate slowly opens.

If the resistance is not as specified, replace the meter.

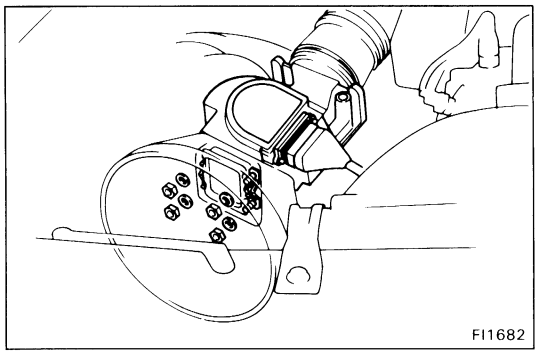

INSTALLATION OF AIR FLOW METER

1. **INSTALL AIR FLOW METER**

   Install the air flow meter with the two new lock plates and four nuts. Pry the lock plates on to the nuts.
2. **INSTALL AIR CLEANER CAP**

   Install the cap with two bolts.
3. **CONNECT NO.2 AIR CLEANER HOSE**
4. **INSTALL AIR FLOW METER CONNECTOR**

Air Flow Meter (7M-GTE)

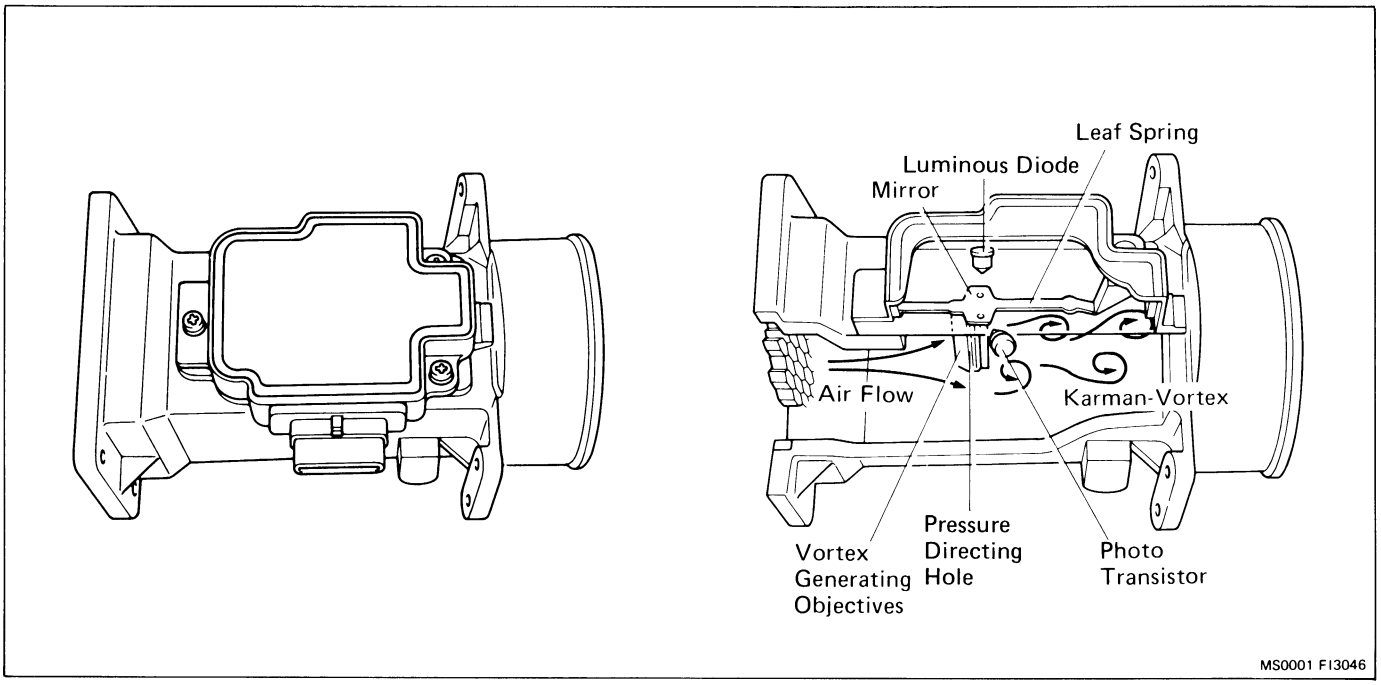

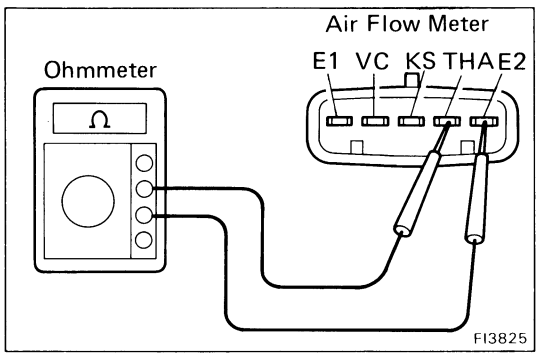

ON-VEHICLE INSPECTION

INSPECT RESISTANCE OF AIR FLOW METER

(a) Disconnect the air flow meter connector.

(b) Using an ohmmeter (analog type), measure the resistance between each terminal.

Terminals	Resistance (Ω)	Temp. °C (°F)
THA – E2	10,000 – 20, 000	–20 (–4)
	4,000 – 7,000	0 (32)
	2,000 – 3,000	20 (68)
	900 – 1,300	40 (104)
	400 – 700	60 (140)

If the resistance is not as specified, replace the air flow meter.

(c) Reconnect the air flow meter connector.

REMOVAL OF AIR FLOW METER

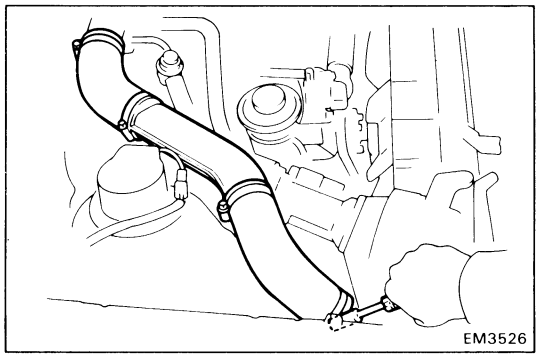

1. **REMOVE NO.4 AIR CLEANER PIPE WITH NO.1 AND NO.2 AIR CLEANER HOSES**

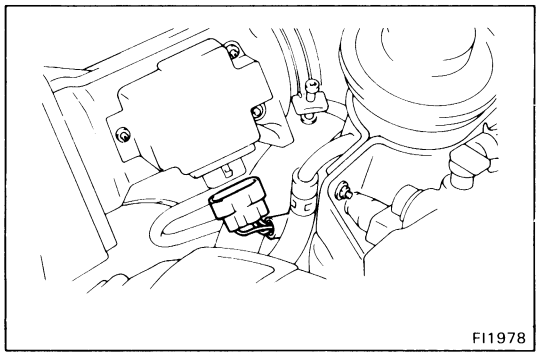

2. **REMOVE AIR FLOW METER WITH AIR CLEANER CAP**
   (a) Disconnect the connector.

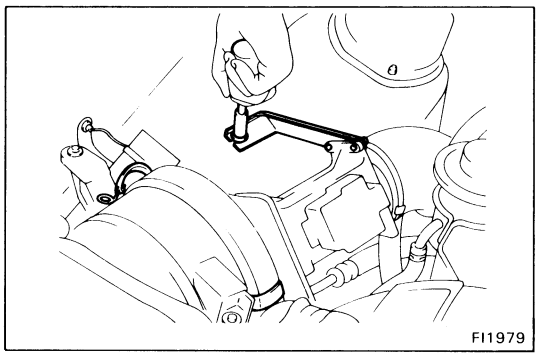

   (b) Remove the three clamps and bolt.

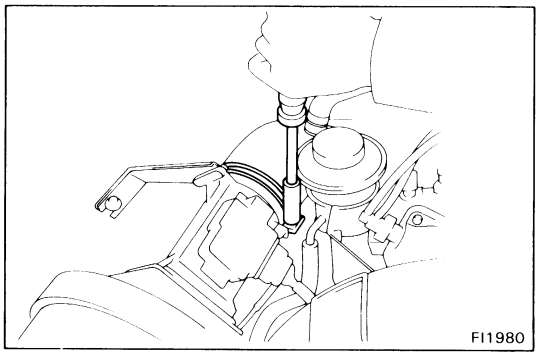

   (c) Loosen the clamp and remove the air flow meter with air cleaner cap.

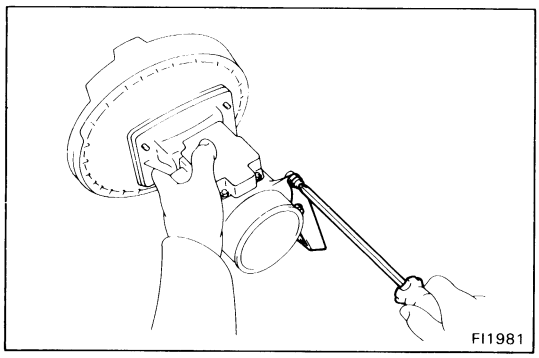

3. **REMOVE AIR FLOW METER**
   (a) Remove the two screws and bracket.

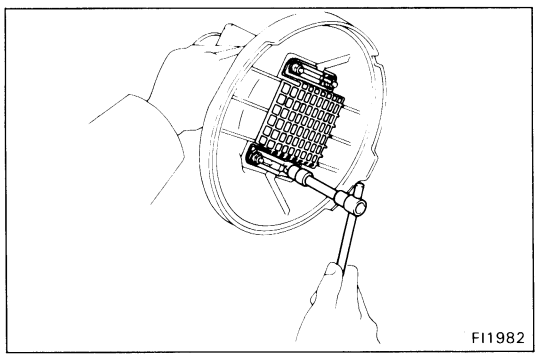

(b) Pry off the lock plate.

(c) Remove the four nuts, lock plates, No.1 air cleaner cover and air cleaner cap.

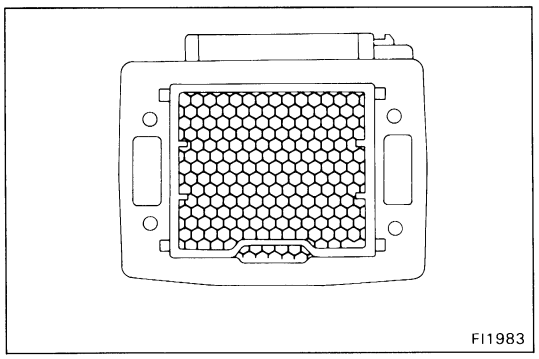

INSPECTION OF AIR FLOW METER

Check that the honey-combed mesh is neither deformed nor damaged.

If necessary, replace the air flow meter.

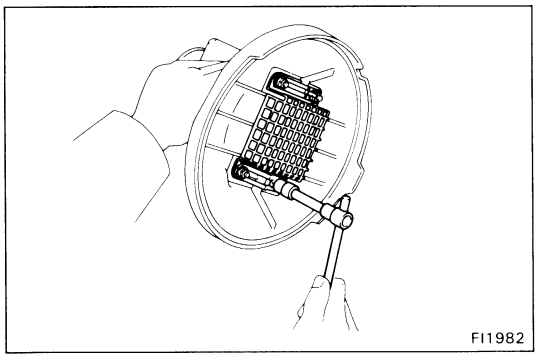

INSTALLATION OF AIR FLOW METER

1. INSTALL AIR FLOW METER

(a) Install the air cleaner cap, No.1 air cleaner cover and lock plates to the air flow meter with the four nuts.

(b) Pry the lock plates on the nuts.

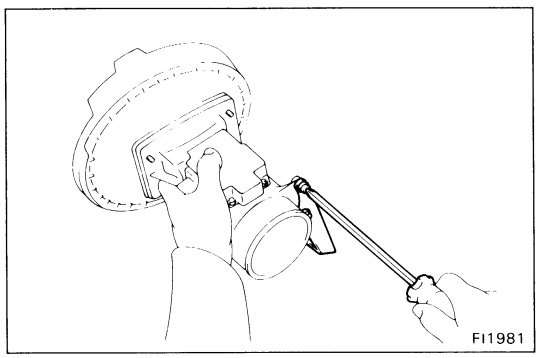

(c) Install the bracket with the two screws.

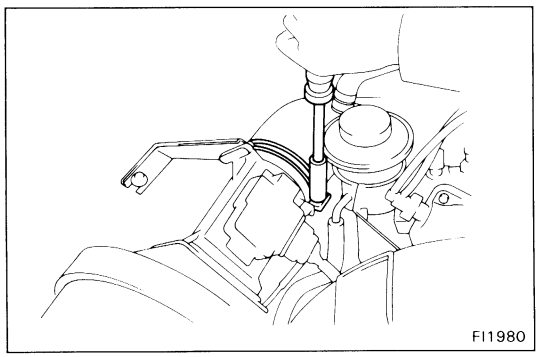

2. INSTALL AIR FLOW METER WITH AIR CLEANER CAP

(a) Install the air flow meter with air cleaner cap, and tighten the clamp.

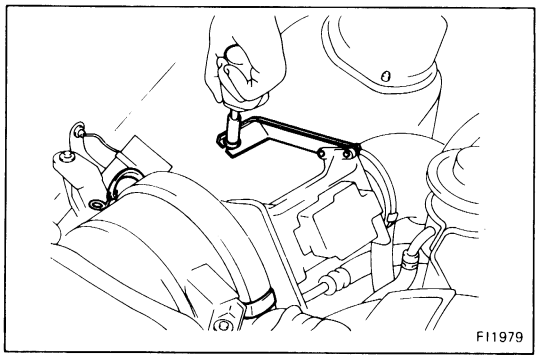

(b) Install the bolt and clamps.

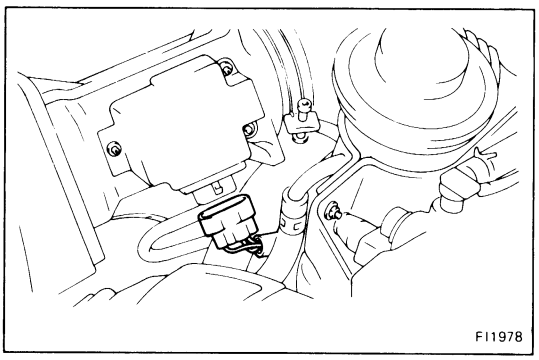

(c) Connect the connector.

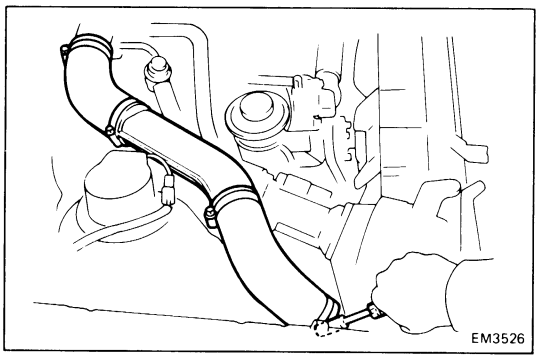

3. INSTALL NO.4 AIR CLEANER PIPE WITH NO.1 AND NO.2 AIR CLEANER HOSES

Throttle Body

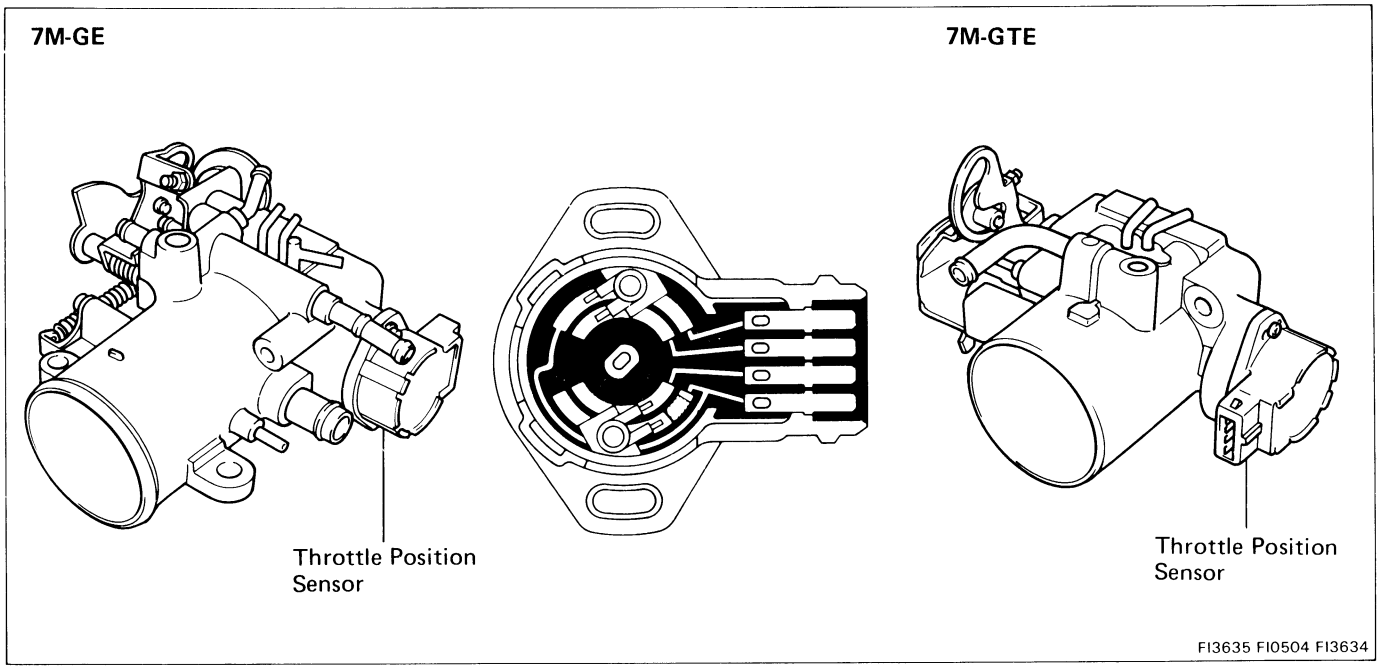

ON-VEHICLE INSPECTION

1. INSPECT THROTTLE BODY

(a) Check that the throttle linkage moves smoothly.

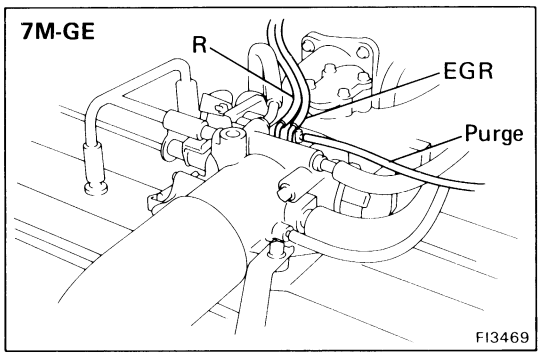

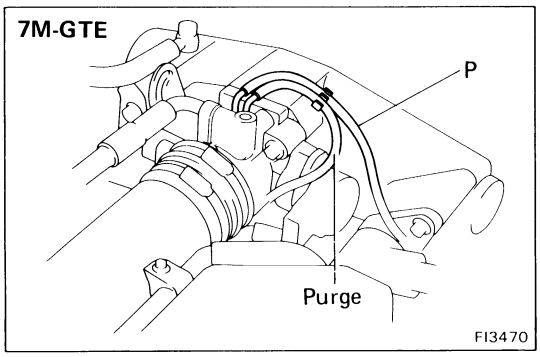

(b) Check the vacuum at each port.
- Start the engine.
- Check the vacuum with your finger.

Port Name	At idling	Other than idling
Purge	No vacuum	Vacuum
EGR	No vacuum	Vacuum
R	No vacuum	No vacuum
P	No vacuum	Vacuum

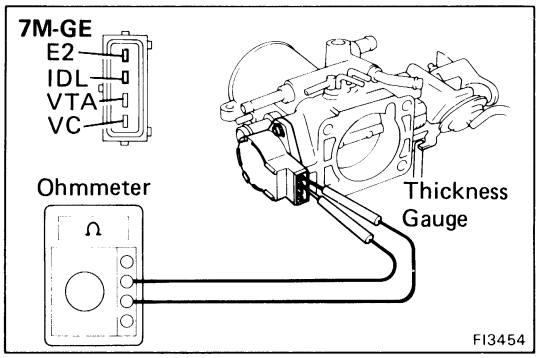

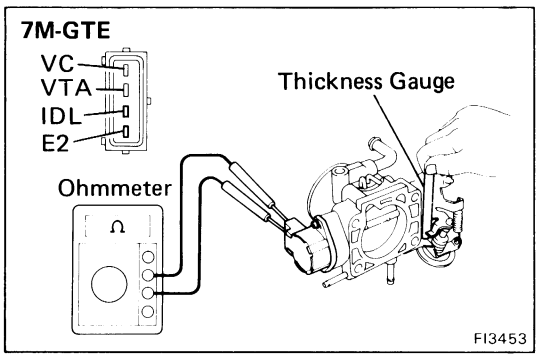

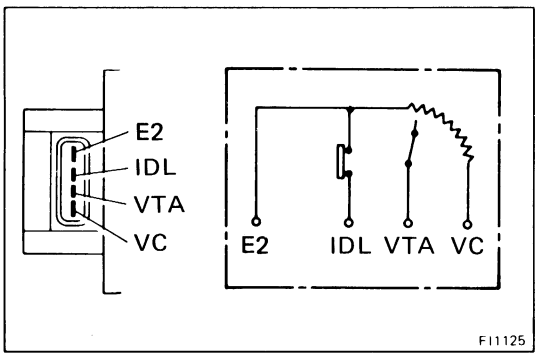

2. INSPECT THROTTLE POSITION SENSOR

(a) Disconnect the connector from the sensor.

(b) Insert a thickness gauge between the throttle stop screw and stop lever.

(c) Using an ohmmeter, measure the resistance between each terminal.

Clearance between lever and stop screw		Between terminals	Resistance
7M-GE	7M-GTE		
0 mm (0 in.)		VTA – E2	0.2 – 1.2 kΩ
0.4 mm (0.0157 in.)	0.5 mm (0.0197 in.)	IDL – E2	2.3 kΩ or less
0.75 mm (0.0295 in.)	0.9 mm (0.0354 in.)	IDL – E2	∞
Throttle valve fully opened position		VTA – E2	3.5 – 10.3 kΩ
–		VC – E2	4.25 – 8.25 kΩ

THROTTLE CLEARANCE WHEN AT STOP SCREW (OMM)

≈ .0015" ~ .002" MAX

REMOVAL OF THROTTLE BODY (7M-GE)

1. DRAIN COOLANT FROM THROTTLE BODY

2. DISCONNECT ACCELERATOR CONNECTING ROD

3. DISCONNECT VACUUM HOSES

4. DISCONNECT NO.2 AND NO.3 WATER BY-PASS HOSES

5. DISCONNECT THROTTLE POSITION SENSOR CONNECTOR

6. DISCONNECT AIR CLEANER HOSE

7. REMOVE THROTTLE BODY BRACKET

8. REMOVE THROTTLE BODY

(a) Remove the four bolts, throttle body and gasket.

(b) Remove the VTV.

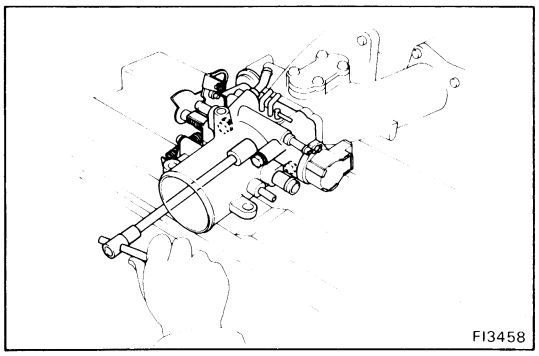

(7M-GTE)

1. **DRAIN COOLANT FROM THROTTLE BODY**
2. **DISCONNECT ACCELERATOR ROD**
3. **REMOVE AIR INTAKE CONNECTOR**
   (See steps 3 to 5 on page EM-12)
4. **DISCONNECT VACUUM HOSES**
5. **DISCONNECT THROTTLE POSITION SENSOR CONNECTOR**
6. **REMOVE THROTTLE BODY**
   (a) Disconnect the two water by-pass hoses from the ISC valve and water pipe.

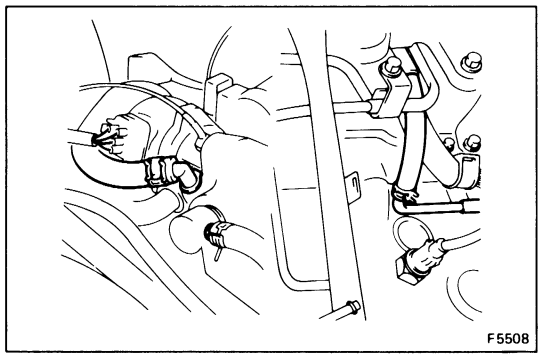
F5508

   (b) Remove the four bolts, throttle body and gasket.
   (c) Remove the two water by-pass hoses.
   (d) Remove the VTV.

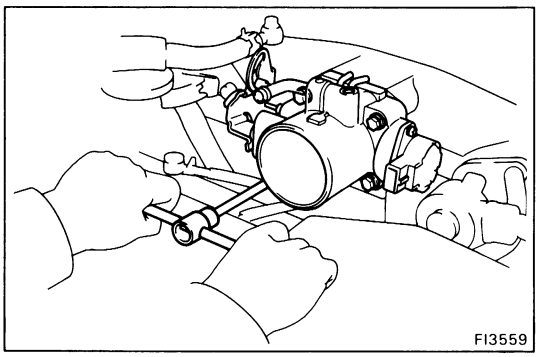
FI3559

INSPECTION OF THROTTLE BODY

1. **CLEAN THROTTLE BODY BEFORE INSPECTION**
   (a) Wash and clean the cast parts with a soft brush and carburetor cleaner.
   (b) Using compressed air, blow all passages and apertures in the throttle body.

   CAUTION: To prevent deterioration, do not clean the throttle position sensor and dash pot.

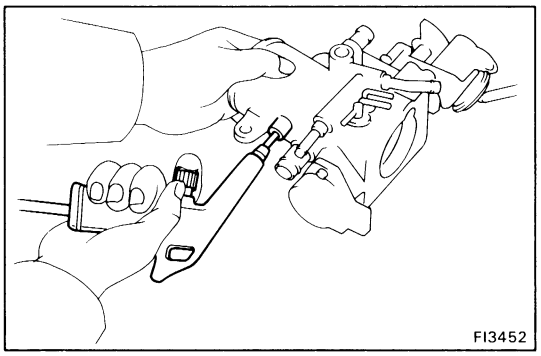
FI3452

2. **CHECK THROTTLE VALVE**
   Check that there is no clearance between the throttle stop screw and throttle lever when the throttle valve is fully closed.

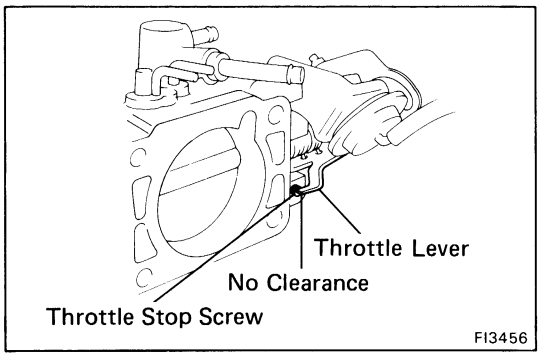

FI3456

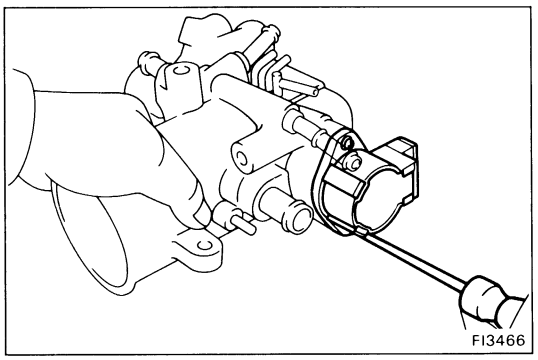

3. CHECK THROTTLE POSITION SENSOR
(See step 2 on page FI-101)

4. IF NECESSARY, ADJUST THROTTLE POSITION SENSOR

(a) Loosen the two screws of the sensor.

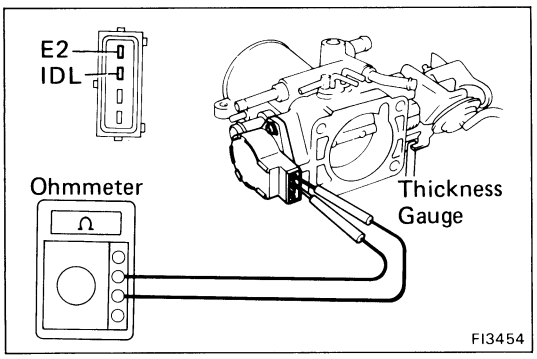

(b) Insert a thickness gauge 0.58 mm (0.0228 in.) (7M-GE) or 0.70 mm (0.0276 in.) (7M-GTE) between the throttle stop screw and lever, and connect the ohmmeter to terminals IDL and E2.

(c) Gradually turn the sensor clockwise until the ohmmeter indicator deflects, and secure the sensor with two screws.

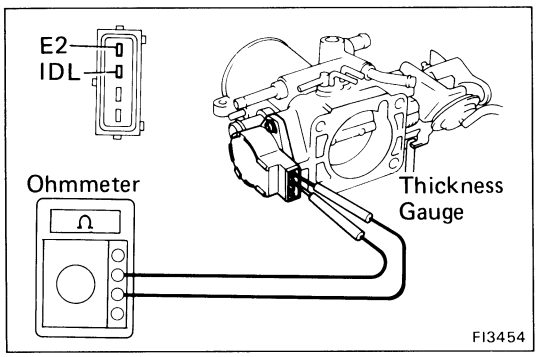

(d) Using a thickness gauge, recheck the continuity between terminals IDL and E2.

Clearance between lever and stop screw		Continuity (IDL – E2)
7M-GE	7M-GTE	
0.40 mm (0.0157 in.)	0.50 mm (0.0197 in.)	Continuity
0.75 mm (0.0295 in.)	0.90 mm (0.0354 in.)	No continuity

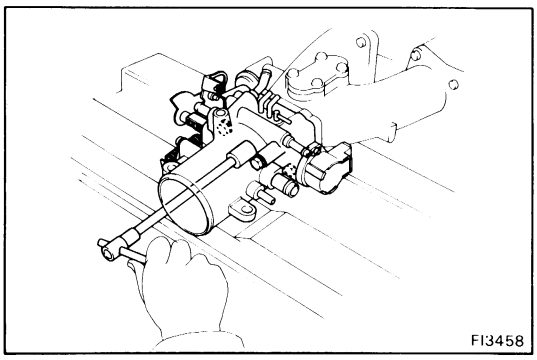

INSTALLATION OF THROTTLE BODY

(7M-GE)

1. **INSTALL THROTTLE BODY**
   (a) Install the VTV.
   (b) Install the gasket and throttle body with the four bolts.
   Torque: 130 kg-cm (9 ft-lb, 13 N·m)
2. **CONNECT THROTTLE BODY BRACKET**
3. **CONNECT AIR CLEANER HOSE**
4. **CONNECT THROTTLE POSITION SENSOR CONNECTOR**
5. **CONNECT VACUUM HOSES**
6. **CONNECT WATER HOSES**
7. **CONNECT ACCELERATOR CONNECTING ROD**
8. **REFILL WITH COOLANT**

(7M-GTE)

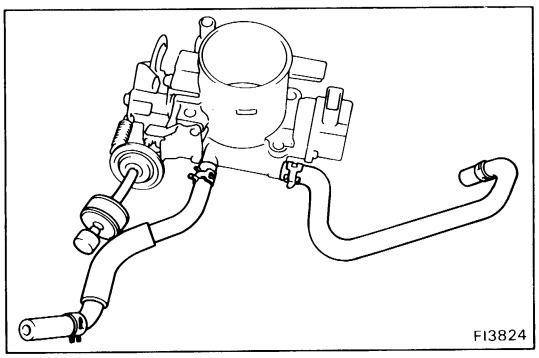

1. **INSTALL THROTTLE BODY**
   (a) Install the VTV.
   (b) Install the two water by-pass hoses.

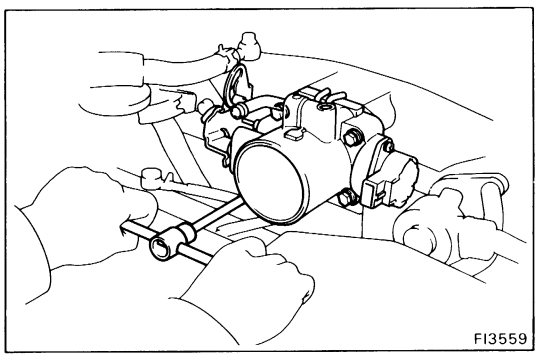

   (c) Install a new gasket and throttle body with the four bolts.

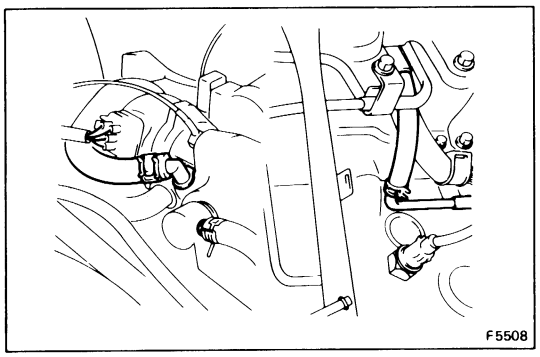

   (d) Connect the two water by-pass hoses to the ISC valve and water pipe.

2. **CONNECT THROTTLE POSITION SENSOR CONNECTOR**
3. **CONNECT VACUUM HOSES**
4. **INSTALL AIR INTAKE CONNECTOR**
   (See steps 15 to 17 on page EM-14)
5. **INSTALL ACCELERATOR ROD**
6. **REFILL WITH COOLANT**

Idle Speed Control (ISC) Valve

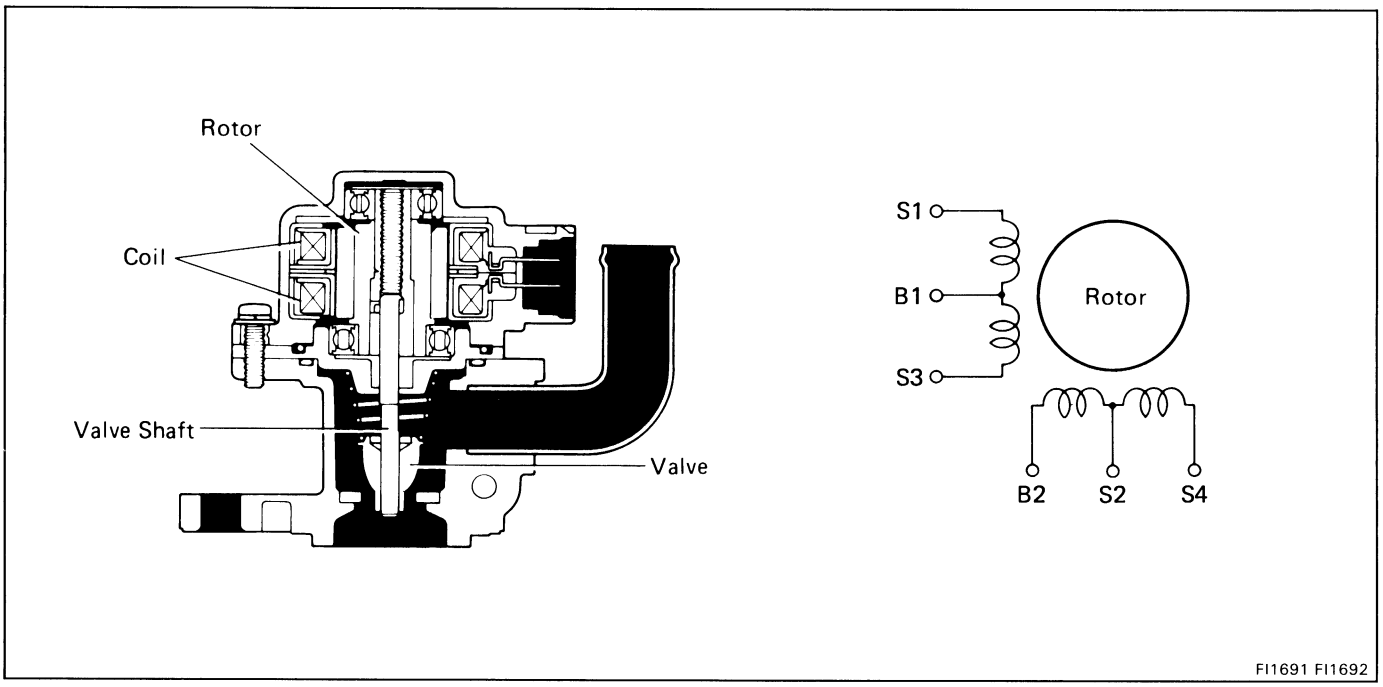

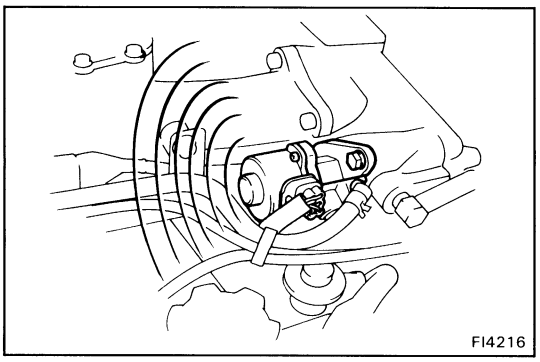

CHECK FOR OPERATING SOUND FROM ISC VALVE

Check that there is a clicking sound immediately after stopping the engine.

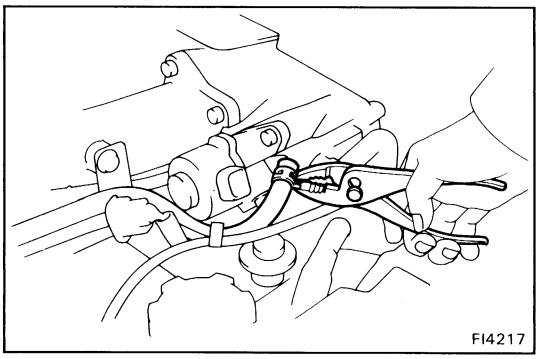

REMOVAL OF ISC VALVE

1. **DRAIN COOLANT**
2. **DISCONNECT ISC VALVE CONNECTOR**
3. **DISCONNECT NO.2 WATER BY-PASS HOSE AND AIR HOSE**

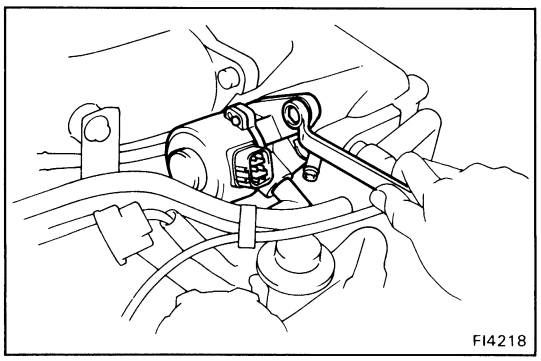

4. **REMOVE ISC VALVE**
   (a) Remove the two bolts, ISC valve and gasket.
   (b) Disconnect the No.1 water by-pass hose from the ISC valve.
   (c) (7M-GTE)
   Remove the seal washer and check valve from the air intake chamber.

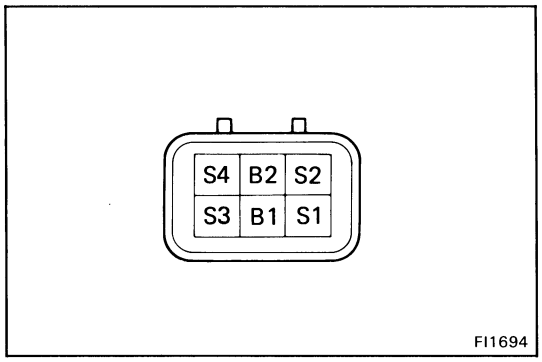

INSPECTION OF ISC VALVE

1. INSPECT RESISTANCE OF ISC VALVE

Using an ohmmmeter, measure the resistance between terminal B1 — S1 or S3 and B2 — S2 or S4.

Resistance: B1 — S1 or S3 10 — 30 Ω
B2 — S2 or S4 10 — 30 Ω

If resistance is not as specified, replace the ISC valve.

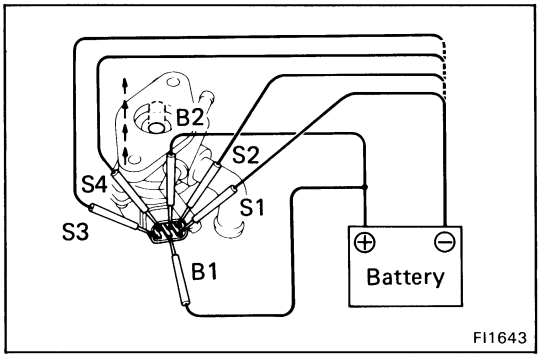

2. INSPECT OPERATION OF ISC VALVE

(a) Apply battery voltage to terminals B1 and B2 and while repeatedly grounding S1 — S2 — S3 — S4 — S1 in sequence, check that the valve moves toward the closed position.

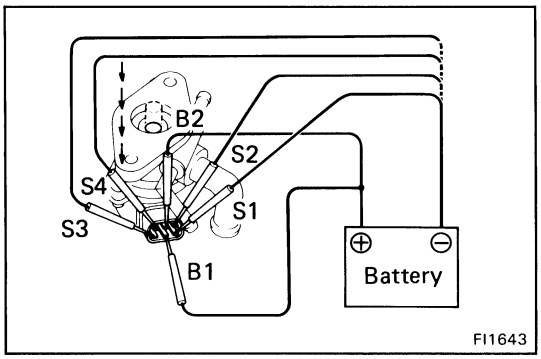

(b) Apply battery voltage to terminals B1 and B2 and while repeatedly grounding S4 — S3 — S2 — S1 — S4 in sequence, check that the valve moves toward the open position.

INSPECTION OF CHECK VALVE (7M-GTE only)

Inspect the check valve for damage and the diaphragm for cracks.

If necessary, replace the check valve.

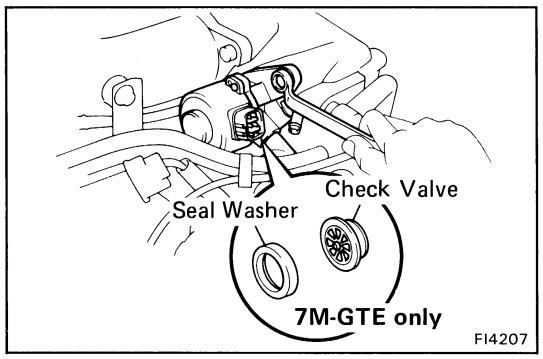

INSTALLATION OF ISC VALVE

1. INSTALL ISC VALVE

(a) (7M-GTE)
Install the check valve and seal washer as shown in the illustration, to the air intake chamber.

(b) Connect the No.1 water by-pass hose to the ISC valve.

(c) Install a new gasket and ISC valve with the two bolts.

Torque: 130 kg-cm (9 ft-lb, 13 N·m)

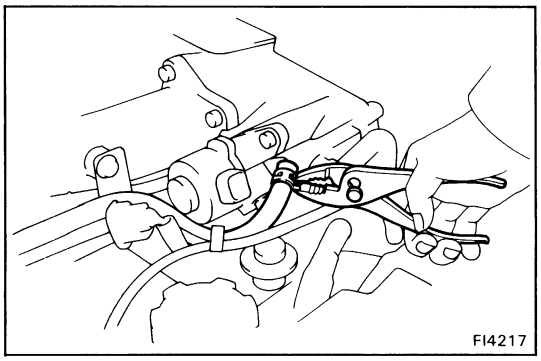

2. CONNECT AIR HOSE AND AIR NO.2 WATER BY-PASS HOSE

3. CONNECT ISC VALVE CONNECTOR

4. REFILL WITH COOLANT

ELECTRONIC CONTROL SYSTEM
Location of Electronic Control Parts

7M-GE

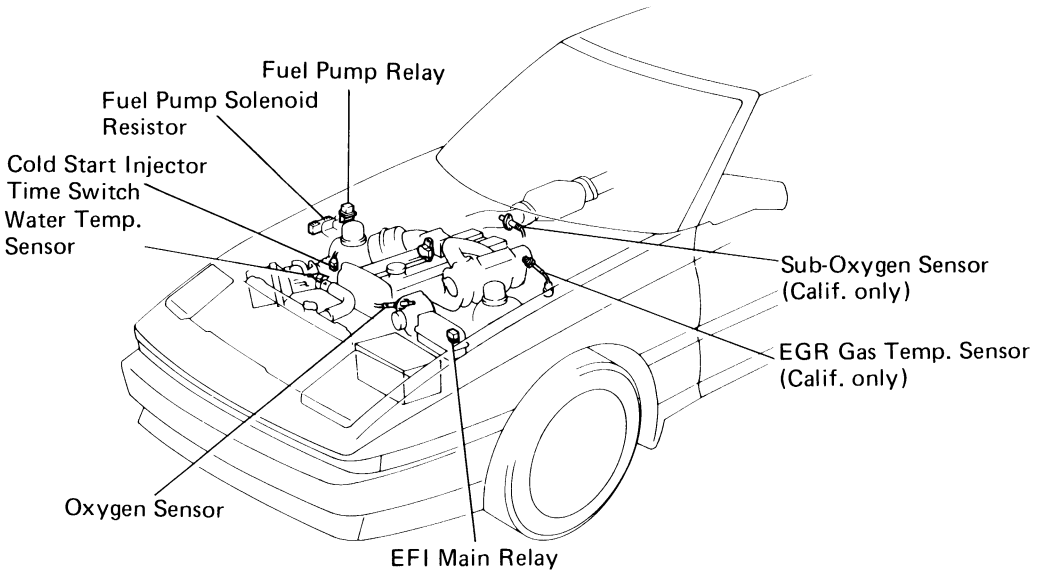

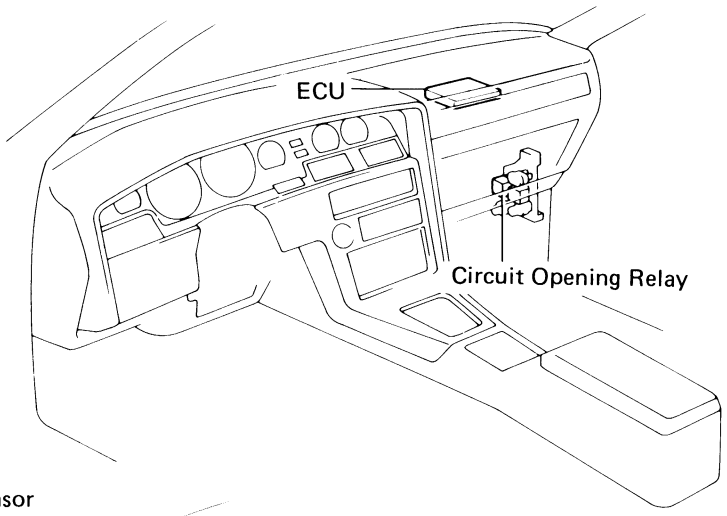

7M-GTE

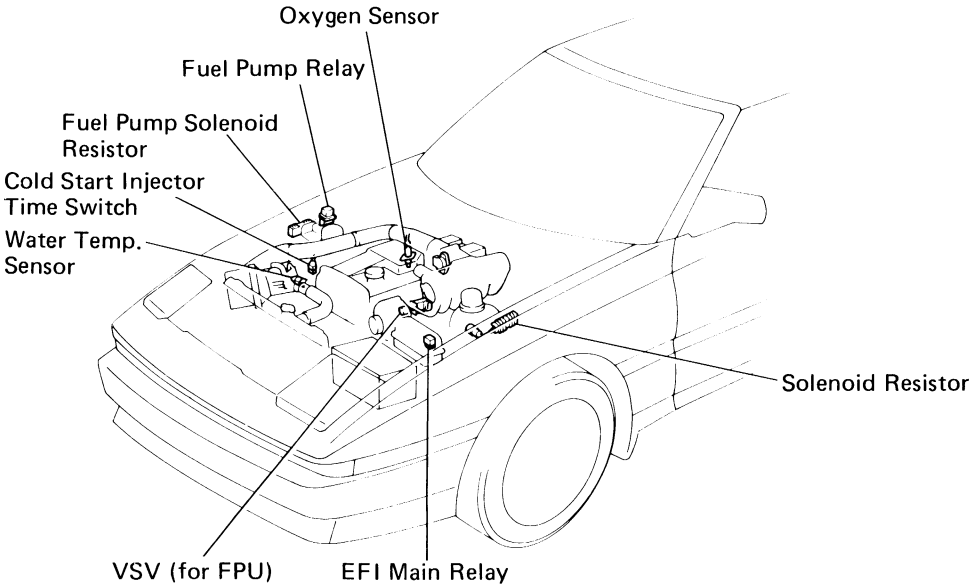

FI3698
FI1696
FI3691

EFI Main Relay

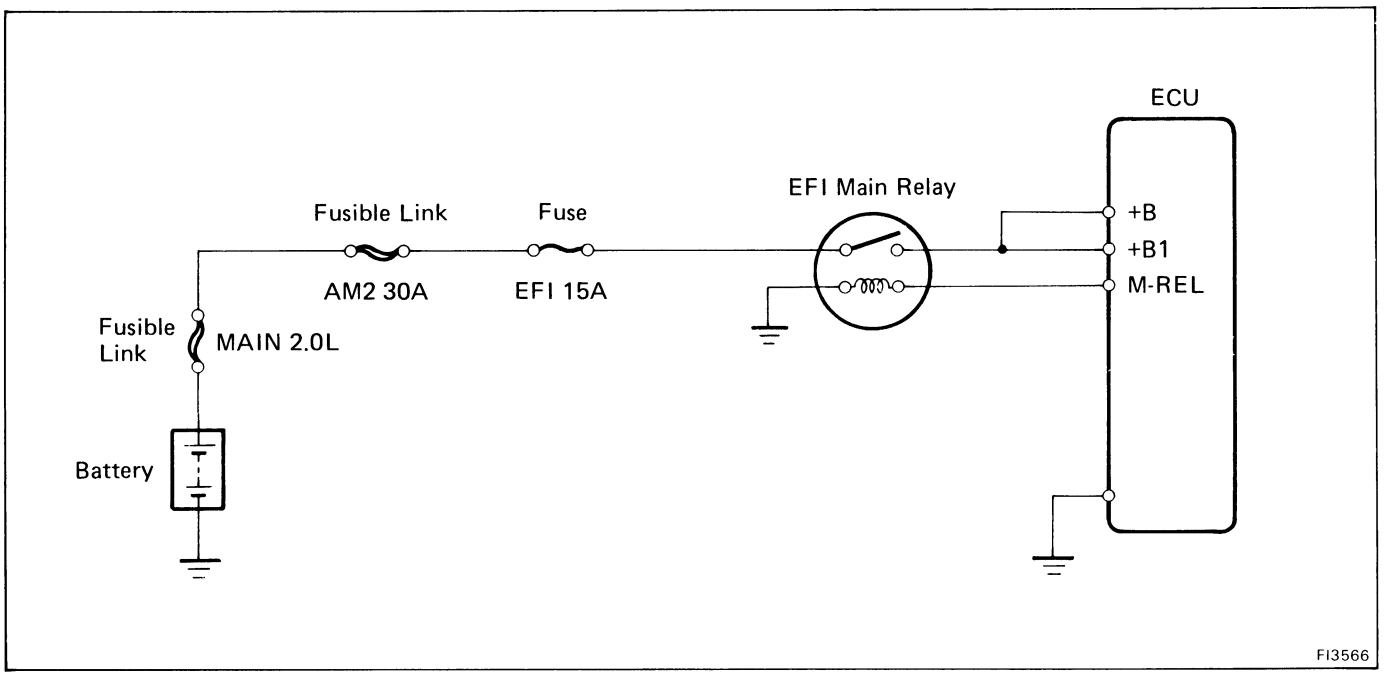

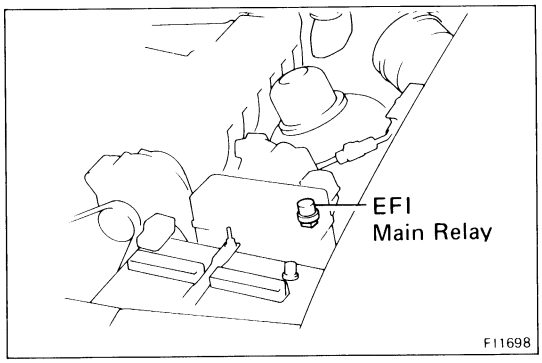

INSPECTION OF EFI MAIN RELAY

1. CHECK OPERATION OF MAIN RELAY

Turn the ignition switch ON. At this time an operation noise will occur from the relay.

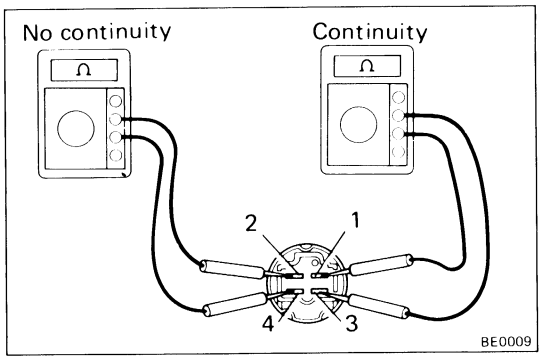

2. INSPECT RELAY CONTINUITY

(a) Using an ohmmeter, check that there is continuity between terminals 1 and 3.

(b) Check that there is no continuity between terminals 2 and 4.

If continuity is not as specified, replace the relay.

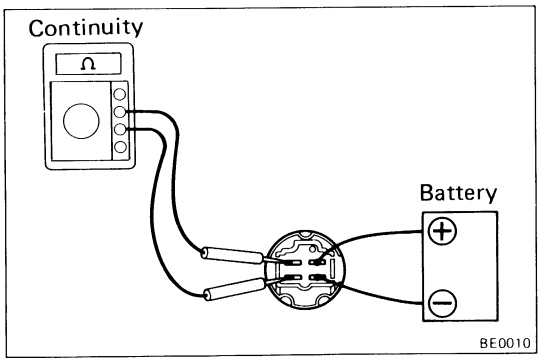

3. INSPECT RELAY OPERATION

(a) Apply battery voltage across terminals 1 and 3.

(b) Check that there is continuity between terminals 2 and 4.

If operation is not as specified, replace the relay.

Circuit Opening Relay

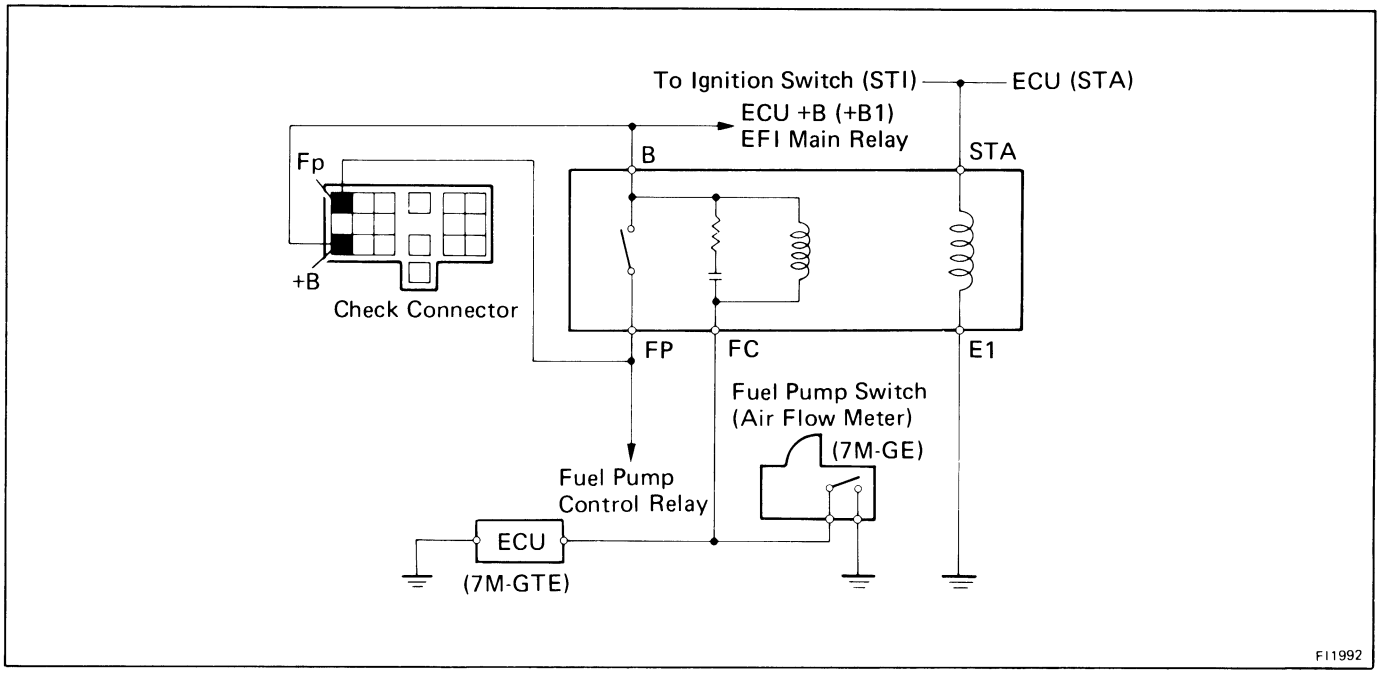

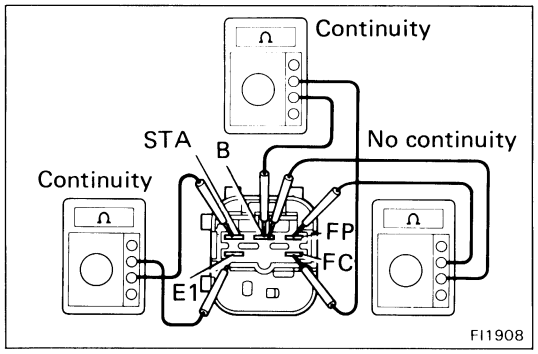

INSPECTION OF CIRCUIT OPENING RELAY

1. INSPECT RELAY CONTINUITY

(a) Using an ohmmeter, check that there is continuity between terminals STA and E1.

(b) Check that there is continuity between terminals B and FC.

(c) Check that there is no continuity between terminals B and FP.

If continuity is not as specified, replace the relay.

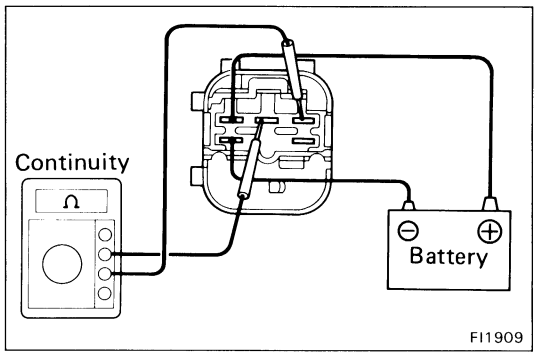

2. INSPECT RELAY OPERATION

(a) Apply battery voltage across terminals STA and E1.

(b) Using an ohmmeter, check that there is continuity between terminals B and FP.

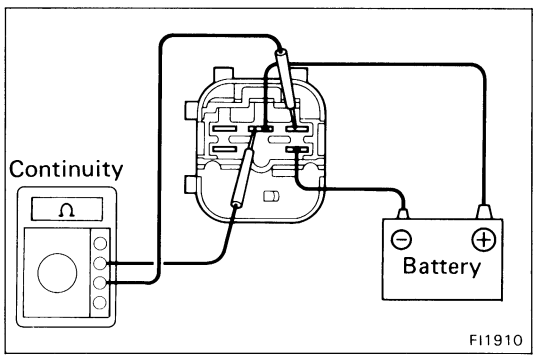

(c) Apply battery voltage across terminals B and FC.

(d) Check that there is continuity between terminals B and FP.

If operation is not as specified, replace the relay.

Solenoid Resistor (7M-GTE)

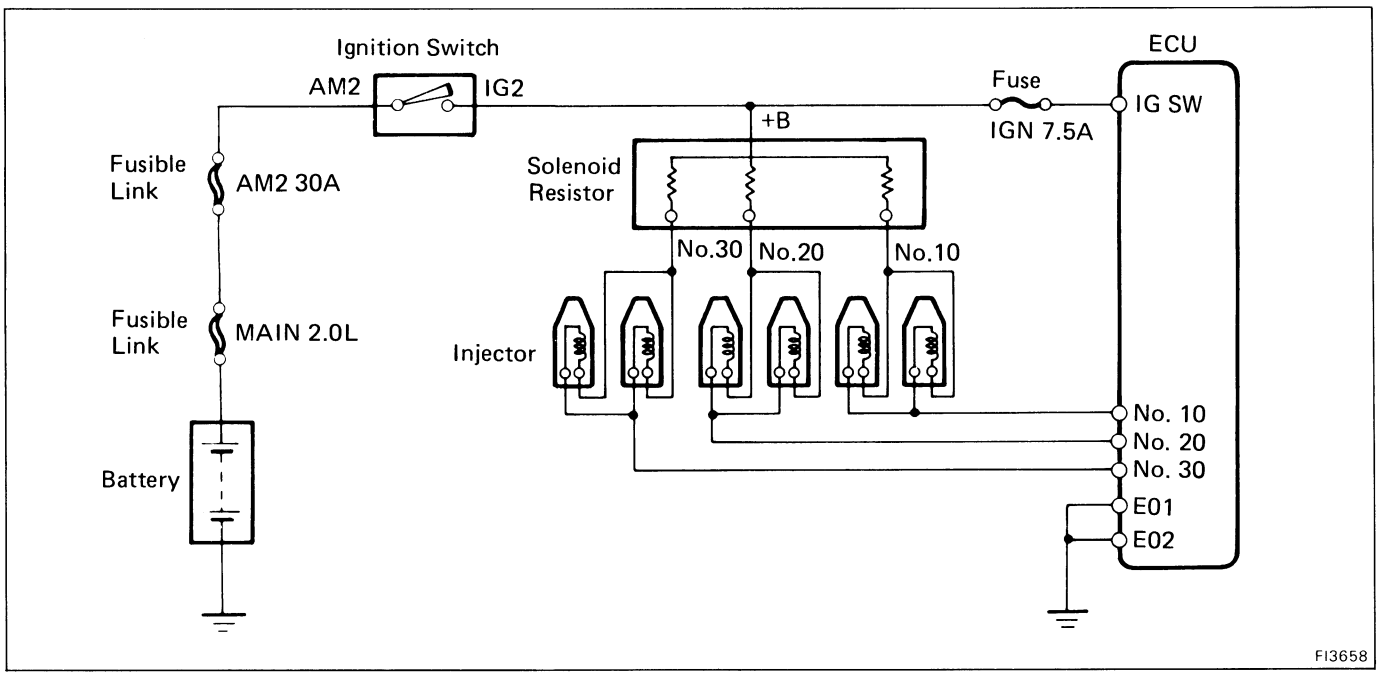

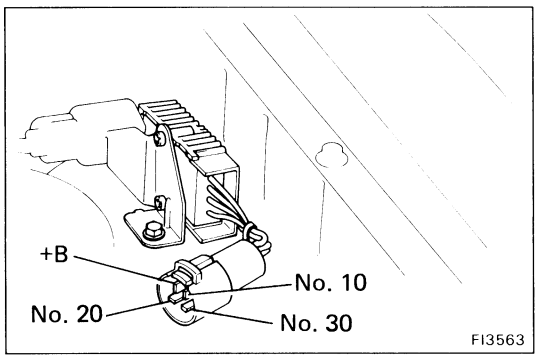

INSPECTION OF SOLENOID RESISTOR

INSPECT RESISTANCE OF SOLENOID RESISTOR

Using an ohmmeter, measure the resistance between +B and other terminals.

Resistance: 3 Ω each

If the resistance is not as specified, replace the resistor.

Cold Start Injector Time Switch

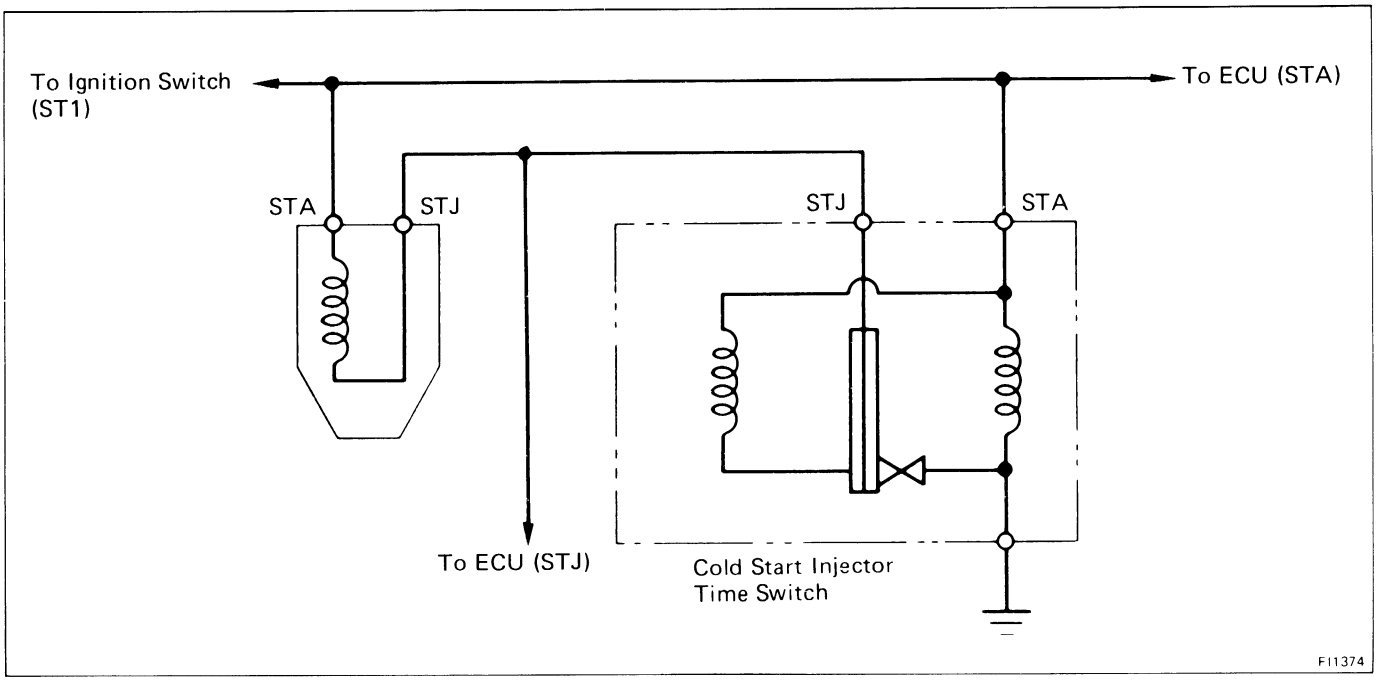

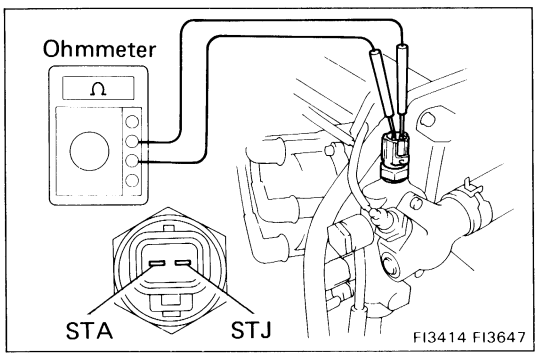

INSPECTION OF COLD START INJECTOR TIME SWITCH

INSPECT RESISTANCE OF COLD START INJECTOR TIME SWITCH

Using an ohmmeter, measure the resistance between each terminal.

Resistance:

STA — STJ	**25 — 45 Ω below 15°C (59°F)**
	65 — 85 Ω above 30°C (86°F)
STA — Ground	**25 — 85 Ω**

If the resistance is not as specified, replace the switch.

Water Temp. Sensor

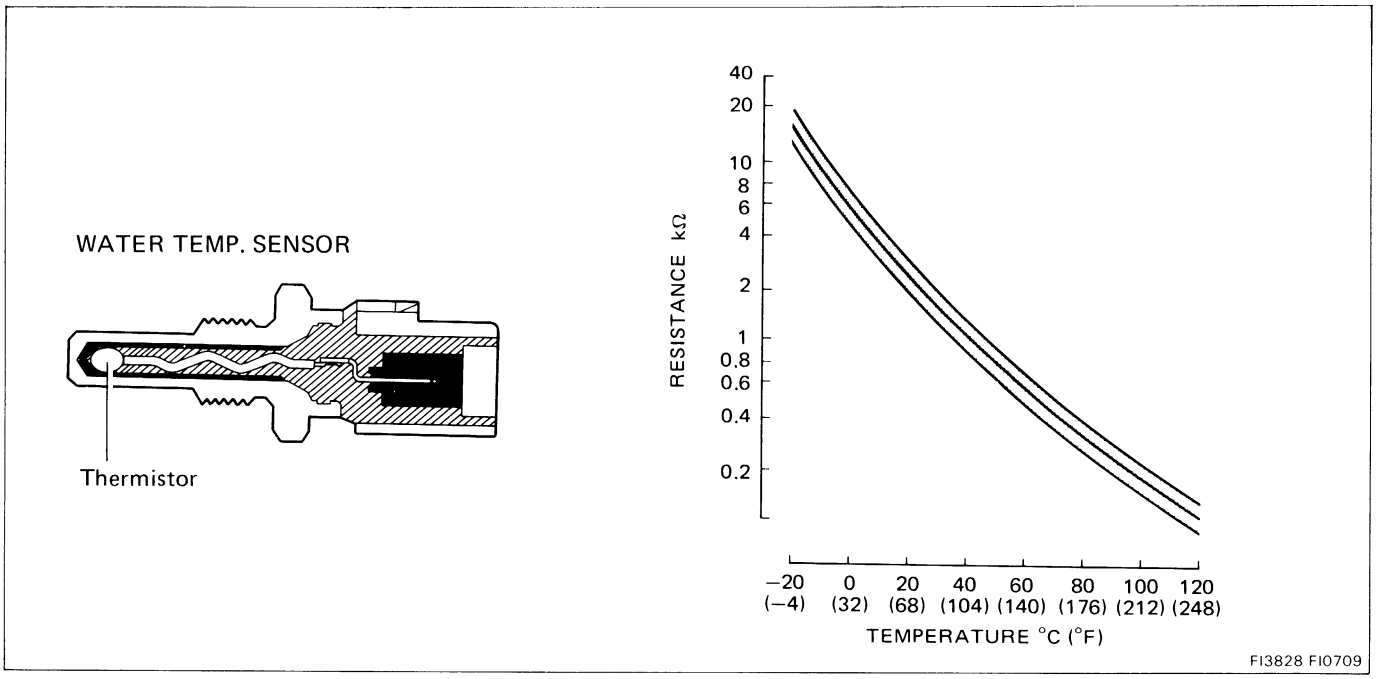

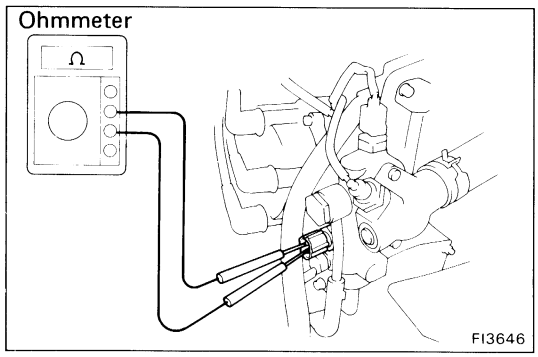

INSPECTION OF WATER TEMP. SENSOR

INSPECT RESISTANCE OF WATER TEMP. SENSOR

(a) Disconnect the connector.

(b) Using an ohmmeter, measure the resistance between both terminals.

Resistance: Refer to chart.

If the resistance is not as specified, replace the sensor.

Fuel Pump Relay and Resistor

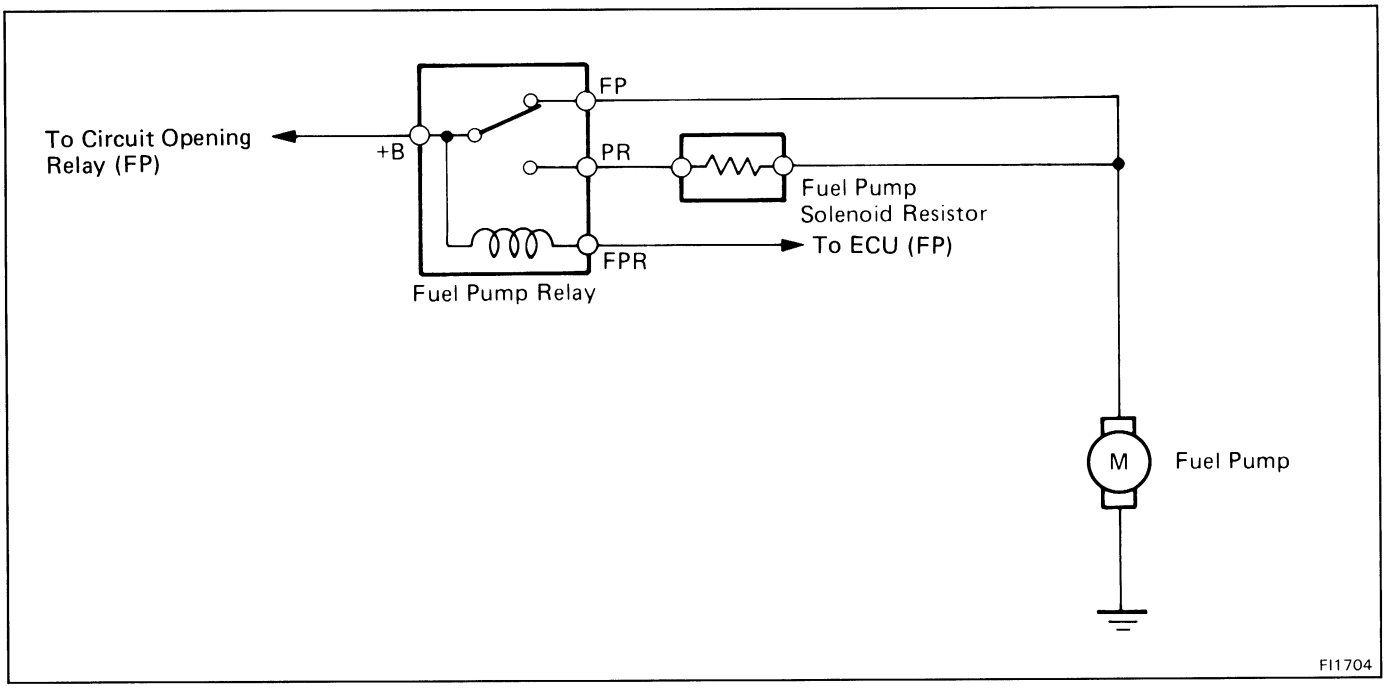

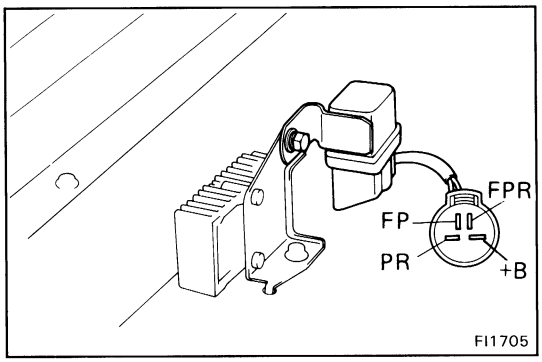

INSPECTION OF PUMP RELAY AND RESISTOR

1. INSPECT OF FUEL PUMP RELAY

HINT: The relay is located in the left cowl side of engine compartment.

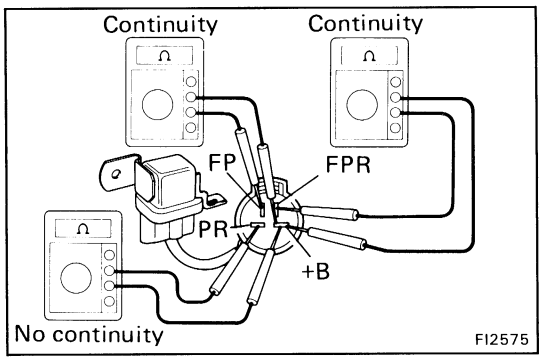

A. Inspect Relay Continuity

(a) Using an ohmmeter, check that there is continuity between terminals +B and FP.

(b) Check that there is continuity between terminals +B and FPR.

(c) Check that there is no continuity between terminals +B and PR.

If continuity is not as specified, replace the relay.

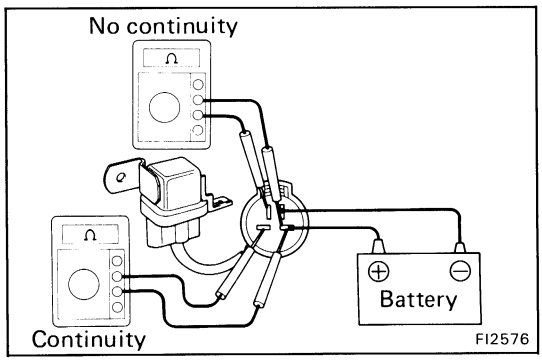

B. Inspect Relay Operation

(a) Apply battery voltage across terminals +B and FPR.

(b) Using an ohmmeter, check that there is continuity between terminals +B and PR.

(c) Check that there is no continuity between terminals +B and FP.

If operation is not as described, replace the relay.

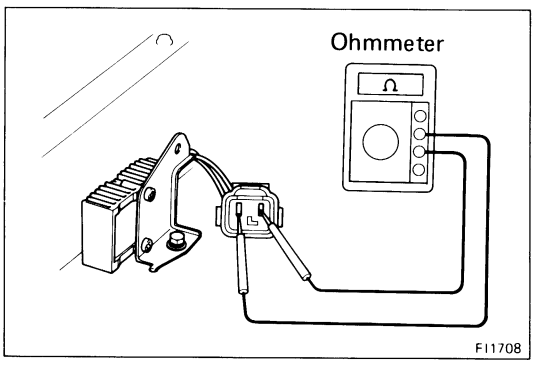

2. INSPECT OF FUEL PUMP RESISTOR

Using an ohmmeter, measure the resistance between both terminals.

Resistance: Approx. 0.7 Ω

If the resistance is not as specified, replace the resistor.

Fuel Pressure Control System (7M-GTE)

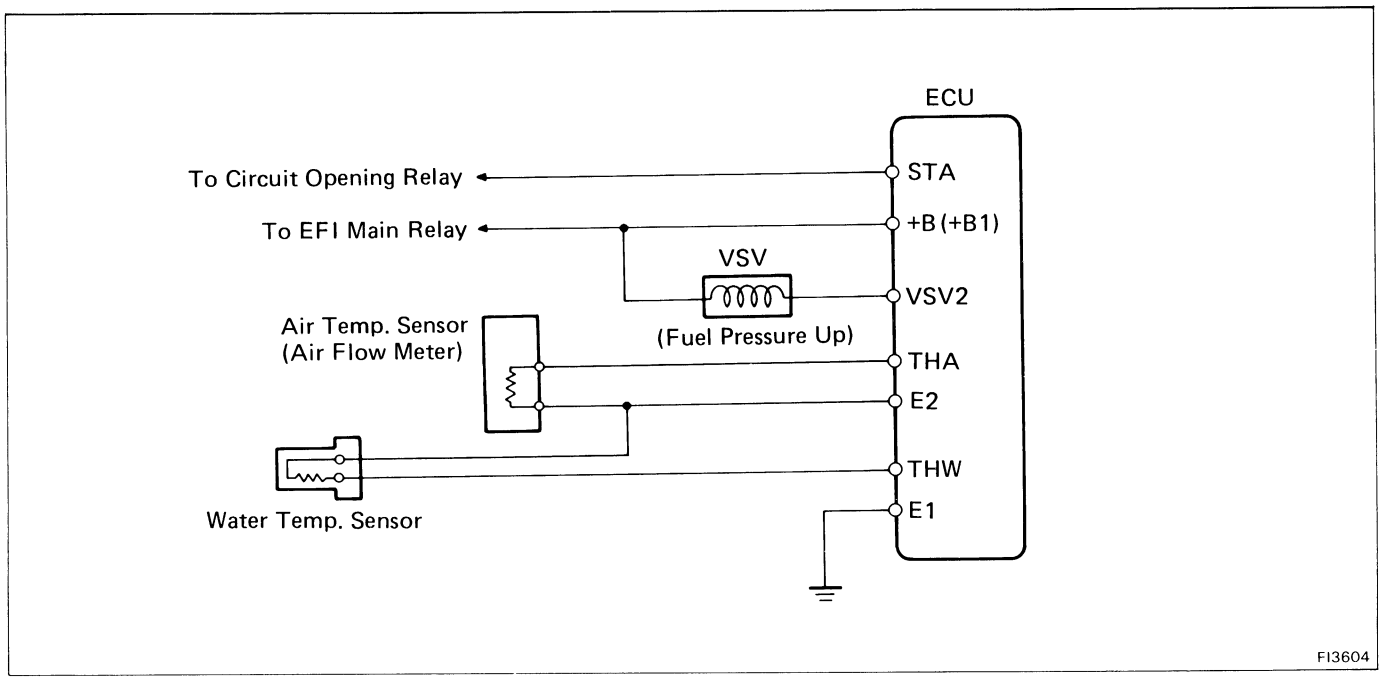

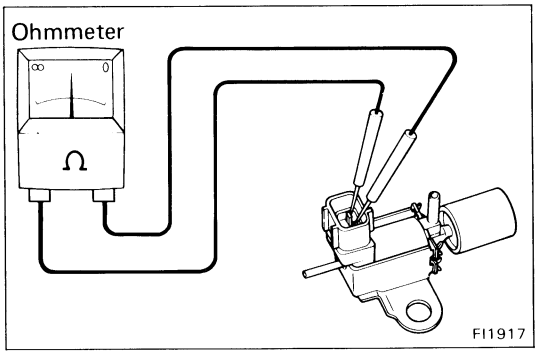

INSPECTION OF FUEL PRESSURE CONTROL SYSTEM

INSPECT VSV

A. Inspect VSV for Open Circuit

Using an ohmmeter, check that there is continuity between terminals.

Resistance: 30 — 50 Ω

If there is no continuity, replace the VSV.

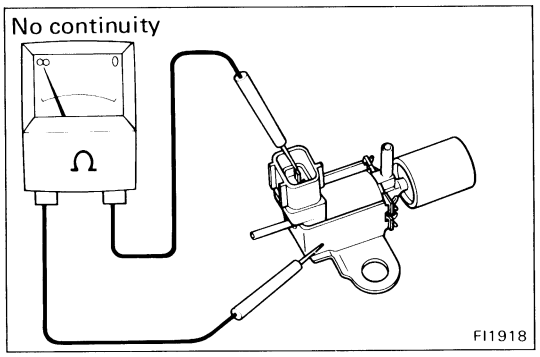

B. Inspect VSV for Short Circuit

Using an ohmmeter, check that there is no continuity between each terminal and the body.

If there is continuity, replace the VSV.

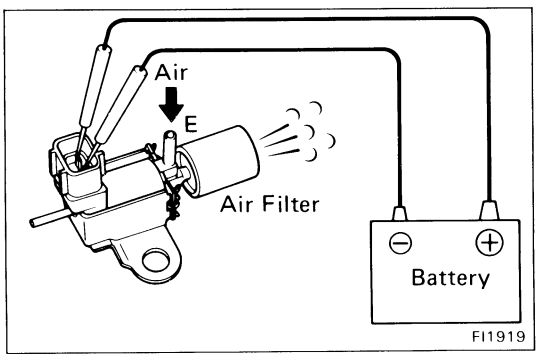

C. Inspect VSV Operation

(a) Apply battery voltage across the terminals.

(b) Check that air flows from pipe E to air filter.

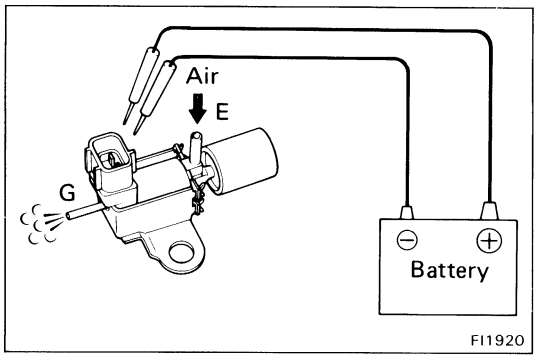

(c) Disconnect the battery.

(d) Check that air flows from pipe E and pipe G.

If operation is not as specified, replace the VSV.

EGR Gas Temp. Sensor (California Vehicles only)

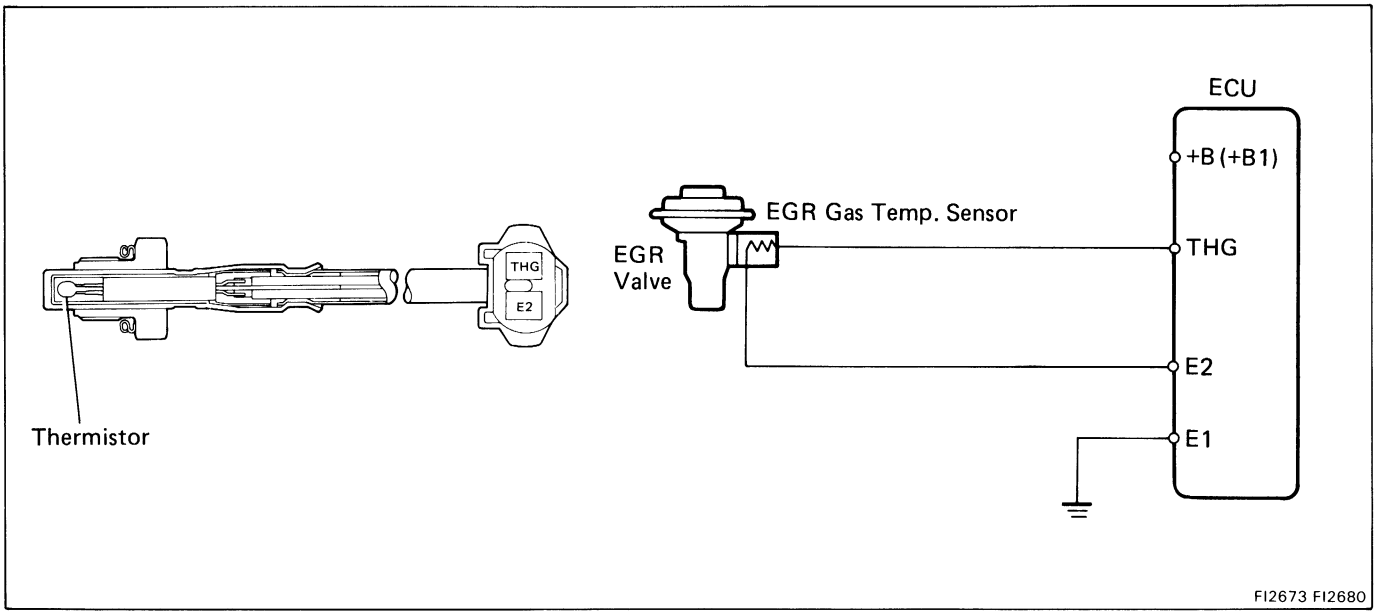

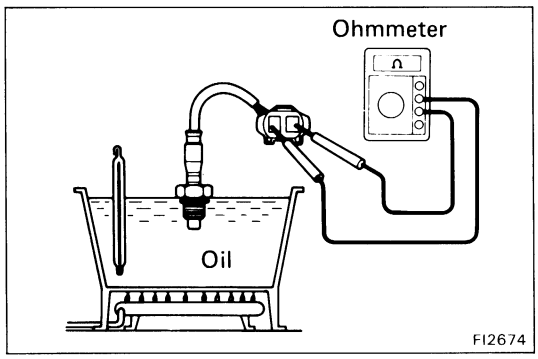

INSPECTION OF EGR GAS TEMP. SENSOR

INSPECT RESISTANCE OF EGR GAS TEMP. SENSOR

Using an ohmmeter, measure the resistance between the terminals.

Resistance:

69.40 – 88.50 kΩ at 50°C (112°F)
11.89 – 14.37 kΩ at 100°C (212°F)
2.79 – 3.59 kΩ at 150°C (302°F)

If the resistance is not as specified, replace the sensor.

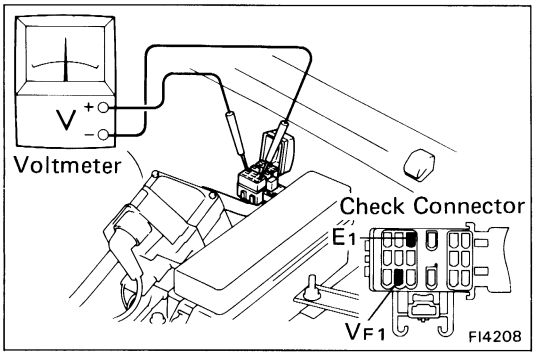

Oxygen Sensor

INSPECTION OF OXYGEN SENSOR

1. WARM UP ENGINE

Allow the engine to reach normal operating temperature.

2. INSPECT FEEDBACK VOLTAGE

Connect the positive (+) probe of a voltmeter to terminals V_{F1} of the check connector, and negative (−) probe to terminal E_1. Perform the test as follows.

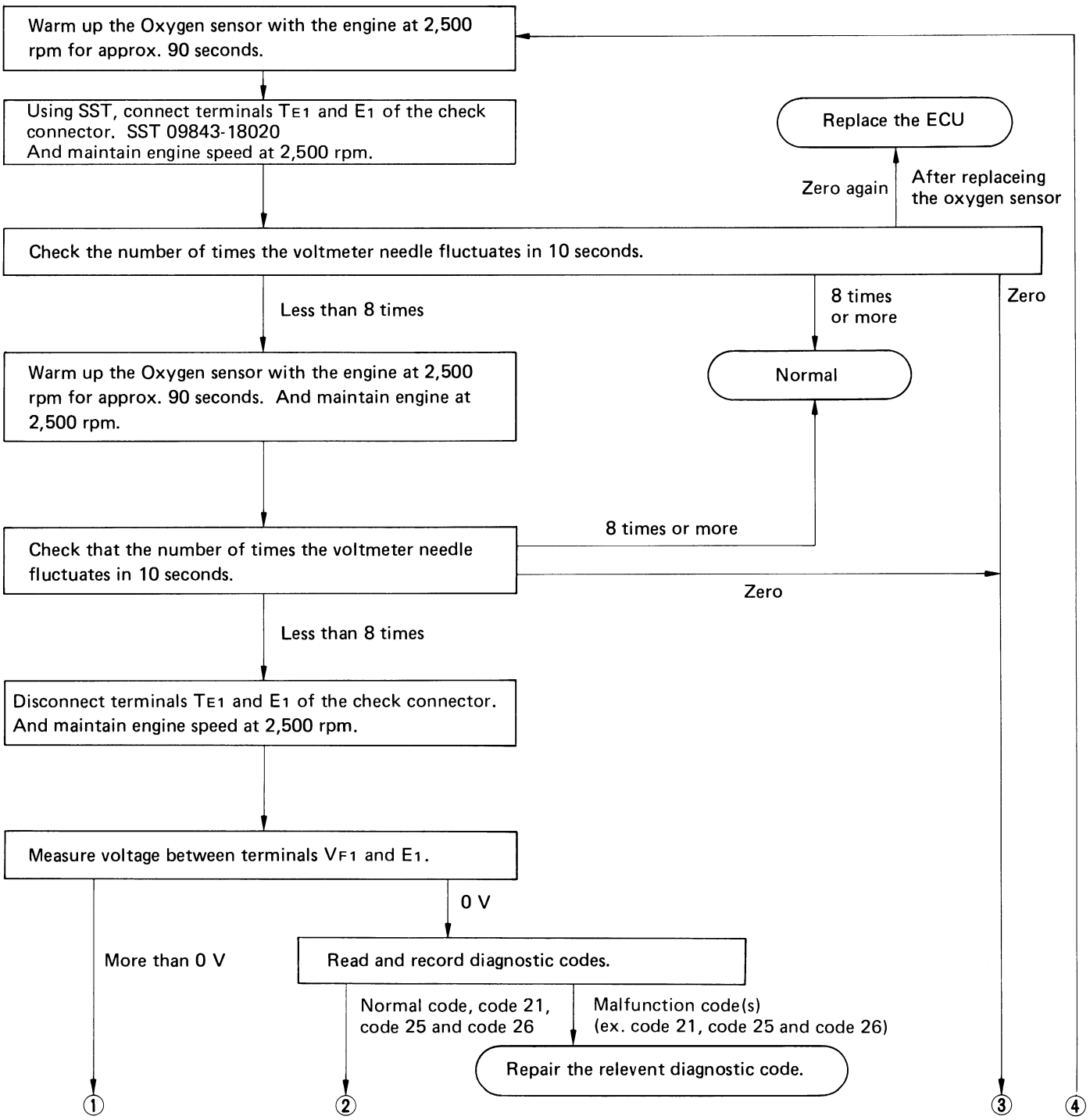

CONTINUED ON PAGE FI-120

CONTINUED FROM PAGE FI-119

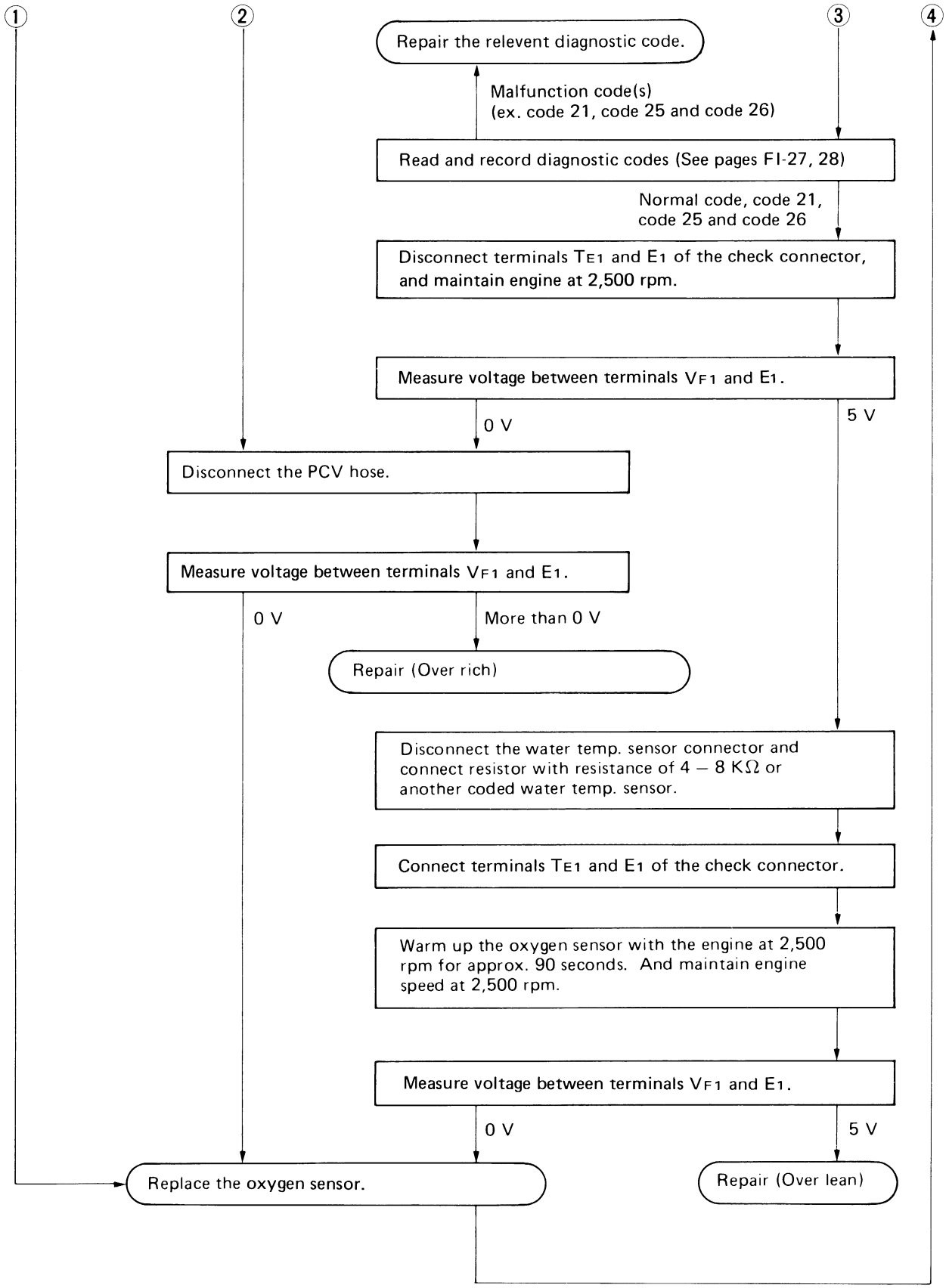

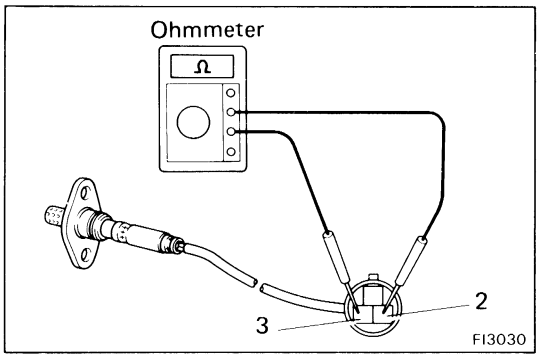

3. **(7M-GTE)**
INSPECT HEATER RESISTANCE OF OXYGEN SENSOR

Using an ohmmeter, measure the resistance between terminals 2 and 3.

Resistance: 3.0 — 3.6 Ω

If the resistance is not as specified, replace the sensor.

Sub-Oxygen Sensor [7M-GE (California Vehicles only)]

INSPECTION OF SUB-OXYGEN SENSOR

1. **INSPECT SUB-OXYGEN SENSOR**

HINT: Inspect only when code No.27 is displayed.

(a) Diagnostic code cancellation. (See Page FI-25)

(b) Warm up the engine until it reaches normal operating temperature.

(c) (M/T)
Drive for 5 minutes or more at less than 80 km/h (50 mph) in 4th or 5th gear.

(A/T)
Drive for 5 minutes or more at less than 80 km/h (50 mph) in "D" range.

(d) Following the conditions in step (c), press fully on the accelerator pedal for 2 seconds or more.

(e) Stop the vehicle and turn the ignition switch to OFF.

(f) Carry out steps (b), (c) and (d) again to test acceleration.

If code No. 27 reappears again, check the sub-oxygen sensor circuit. If the circuit is normal, replace the sub-oxygen sensor.

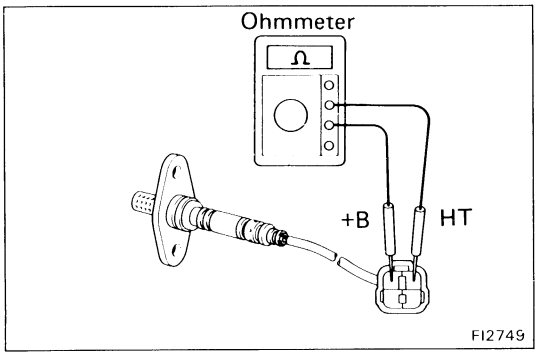

2. **INSPECT HEATER RESISTANCE OF SUB-OXYGEN SENSOR**

Using an ohmmeter, measure the resistace between terminals +B and HT.

Resistance: 5.1 — 6.3 Ω

If the resistance is not as specified, replace the sensor.

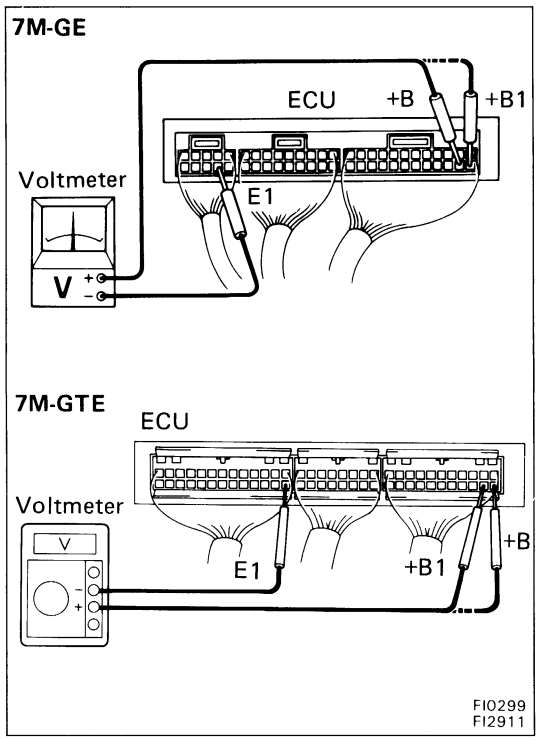

Electronic Controlled Unit (ECU)

INSPECTION OF ECU

HINT: The EFI circuit can be checked by measuring the resistance and voltage at the wiring connectors of the ECU.

1. **(7M-GTE)**
   PREPARATION
   (See page FI-50)

2. **INSPECT VOLTAGE OF ECU**

   Check the voltage between each terminal of the wiring connectors.

   - Turn the ignition switch ON.
   - Measure the voltage at each terminal.

   HINT:
   - Perform all voltage measurements with the connectors connected.
   - Verify that the battery voltage is 11V or more when the ignition switch is ON.

Voltage at ECU Wiring Connectors

Terminals	STD Voltage	Condition	
BATT – E1	10 – 14	–	
IG SW – E1		Ignition SW ON	
M-REL – E1			
+B (+B1) – E1			
IDL – E2 (7M-GE)	10 – 14	Ignition SW ON	Throttle valve open
IDL – E2 (7M-GTE)	4 – 6		Throttle valve open
VC – E2	4 – 6		–
VTA – E2	0.1 – 1.0		Throttle valve fully closed
	4 – 5		Throttle valve fully open
*1 VS – E2	3.7 – 4.3	Ignition SW ON	Measuring plate fully closed
	0.2 – 0.5		Measuring plate fully open
	2.3 – 2.8	Idling	
	1.0 – 2.0	3,000 rpm	
*2 KS – Body ground	4 – 6	Ignition SW ON	
	2 – 4	Cranking or running	
*2 VC – Body ground	4 – 6	Ignition SW ON	

Voltage at ECU Wiring Connectors (Cont'd)

Terminals	STD Voltage	Condition	
THA – E2	1 – 3	Ignition SW ON	Intake air temperature 20°C (68°F)
THW – E2	0.1 – 1.0	Ignition SW ON	Coolant temperature 80°C (176°F)
No. 10 E01 No. 20 – No. 30 E01	10 – 14	Ignition SW ON	
STA – E1	6 – 14	Cranking	
ISC1 ~ – E1 ISC4	9 – 14	Ignition SW ON	
IGT – E1	0.7 – 1.0	Idling	
*2 IGDA IGDB – E1	1 – 3	Idling	
W – E1	8 – 14	No trouble ("CHECK ENGINE" warning light off) and engine running.	
A/C – E1	10 – 14	Air conditioning ON	
TE1 – E1	4 – 6	Ignition SW ON	Check connector terminals TE1 – E1 not connect
	0		Check connector terminals TE1 – E1 connect
NSW (A/T) – E1	0	Ignition SW ON	Shift position P or N range
	10 – 14		Ex. P or N range
N/C (M/T) – E1	0	Ignition SW ON	Clutch pedal not depressed
	10 – 14		Clutch pedal depressed
*3 DFG – E1	10 – 14	Ignition SW ON	Defogger SW OFF
	0		Defogger SW ON
*3 LP – E1	10 – 14	Headlight SW OFF	
	0	Headlight SW ON	

*1 7M-GE only
*2 7M-GTE only
*3 7M-GTE (M/T) only

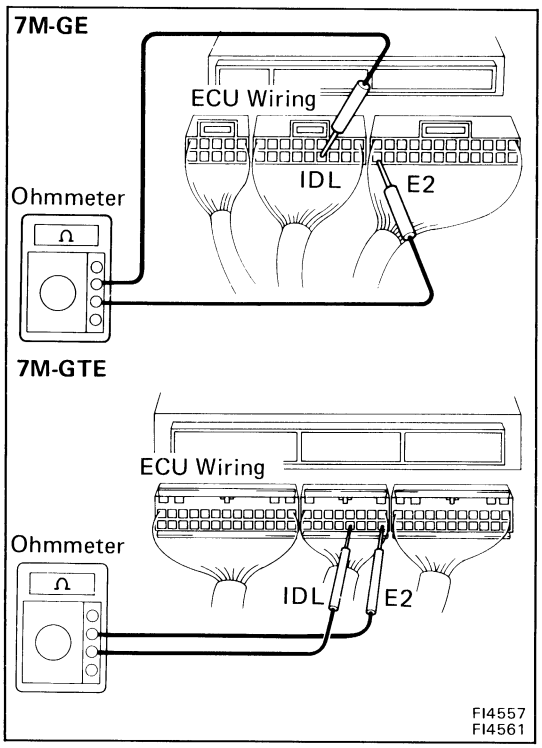

3. **INSPECT RESISTANCE OF ECU**

NOTICE:

- **Do not touch the ECU terminals.**
- **The tester probe should be inserted into the wiring connector from the wiring side.**

Check the resistance between each terminal of the wiring connectors.

- Disconnect the connectors from the ECU.
- Measure the resistance at each terminal.

Resistance of ECU Wiring Connectors

Terminals	Condition	Resistance (Ω)
IDL – E2	Throttle valve open	∞
	Throttle valve fully closed	2,300 or less
VTA – E2	Throttle valve fully open	3,500 – 10,300
	Throttle valve fully closed	200 – 1,200
*1 VC – E2	–	4,250 – 8,250
*1 VS – E2	Measuring plate fully closed	200 – 600
	Measuring plate fully open	20 – 1,200
THW – E2	Coolant temperature 80°C (176°F)	200 – 400
G1, G2 – G ⊖	–	140 – 180
NE – G ⊖ (7M-GE)	–	180 – 220
NE – G ⊖ (7M-GTE)	–	140 – 180
ISC1, ISC2 ISC3, ISC4 – +B (+B1)	–	10 – 30

*1 7M-GE only
*2 7M-GTE only

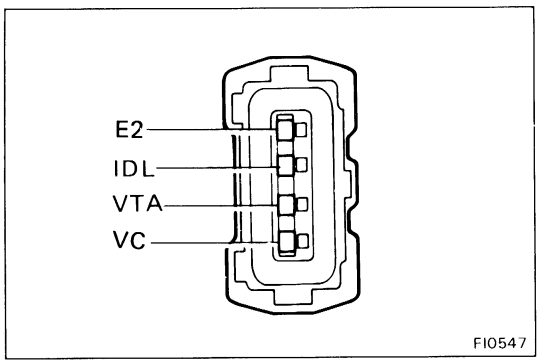

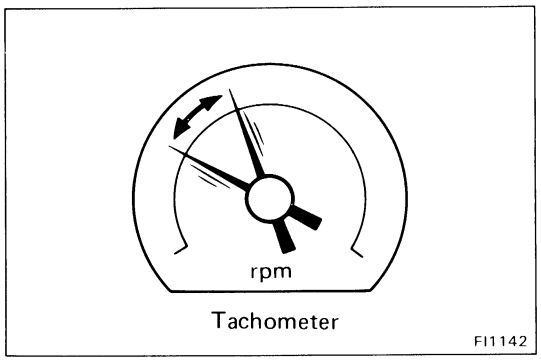

Fuel Cut RPM

INSPECTION OF FUEL CUT RPM

INSPECT FUEL CUT RPM

(a) Start and warm up the engine.

(b) Disconnect the throttle position sensor connector from the throttle position sensor.

(c) Connect circuit terminals IDL and E2 on the wire connector side.

(d) Gradually raise the engine rpm and check by the fluctuation of the tachometer needle, that the fuel cut operation repeatedly goes on and off.

HINT: The vehicle should be stopped.

Fuel cut rpm:	**7M-GE**	**1,800 rpm**
	7M-GTE	**1,600 rpm**
Fuel return rpm:	**7M-GE**	**1,200 rpm**
	7M-GTE	**1,200 rpm**

COOLING SYSTEM

	Page
DESCRIPTION	CO-2
TROUBLESHOOTING	CO-4
CHECK AND REPLACEMEANT OF ENGINE COOLANT	CO-5
WATER PUMP	CO-6
THERMOSTAT	CO-8
RADIATOR	CO-9

DESCRIPTION

This engine utilizes a pressurized water forced circulation cooling system which includes a thermostat equipped mounted on the outlet side.

7M-GE

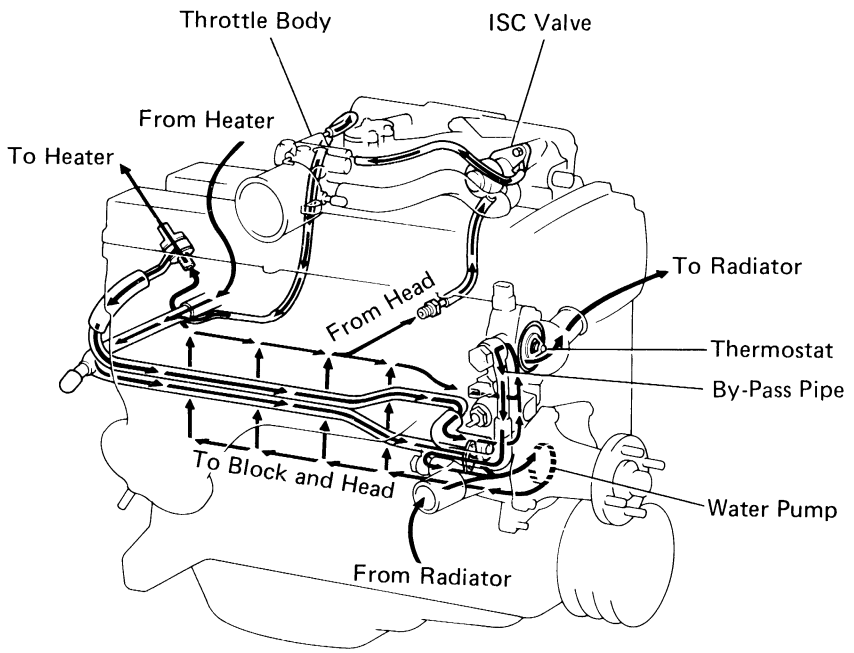

7M-GTE

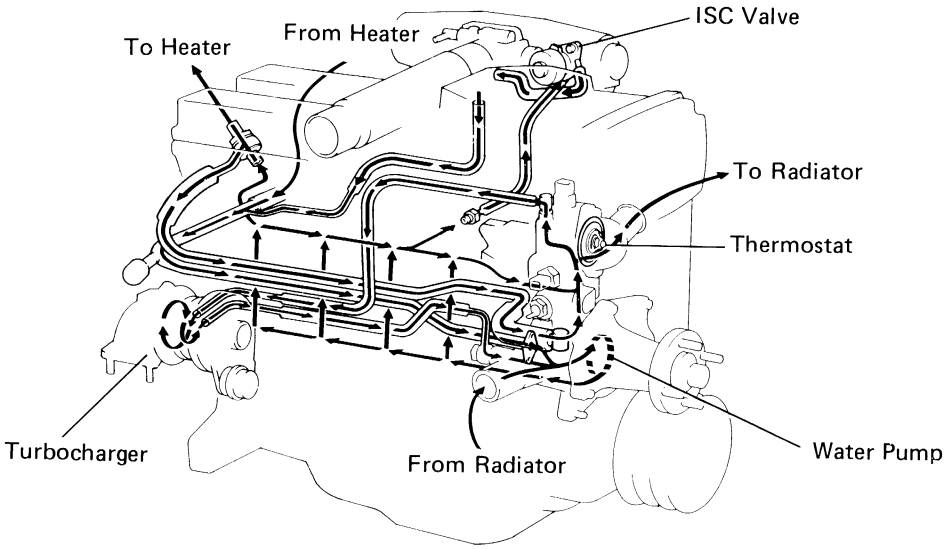

CO0561
CO0557

The cooling system is composed of the water jacket (inside the cylinder block and cylinder head), radiator, water pump, thermostat, cooling fan, hoses and other components.

Coolant which is heated in the water jacket is pumped to the radiator, through which an cooling fan blows air to cool the coolant as it passes through. Coolant which has been cooled is then sent back to the engine by the water pump, where it cools the engine.

The water jacket is a network of channels in the shell of the cylinder block and cylinder head through which coolant passes. It is designed to provide adequate cooling of the cylinders and combustion chambers which become the hottest during engine operation.

RADIATOR

The radiator performs the function of cooling the coolant which has passed through the water jacket and become hot, and is mounted in the front of the vehicle. The radiator consists of an upper tank and lower tank, and a core which connects the two tanks. The upper tank contains the inlet for coolant from the water jacket and the filter inlet. It also has a hose attached through which excess coolant or steam can flow. The lower tank contains the outlet for coolant and the drain cock. The core contains many tubes through which coolant flows from the upper tank to the lower tank as well as cooling fins which radiate heat away from the coolant in the tubes. The air sucked through the radiator by cooling fan, as well as the wind generated by the vehicle's travel, passes through the radiator, cooling it. Models with automatic transmissions include an automatic transmission fluid cooler built into the lower tank of the radiator.

RADIATOR CAP

The radiator cap is a pressure type cap which seals the radiator, resulting in pressurization of the radiator as the coolant expands. The pressurization prevents the coolant from boiling even when the coolant temperature exceeds 100°C (212°F). A relief valve (pressurization valve) and a vacuum valve (negative pressure valve) are built into the radiator cap. The relief valve opens and lets steam escape through the overflow pipe when the pressure generated inside the cooling system exceeds the limit (coolant temperature: 110 — 120°C, (230 — 248°F), pressure; 0.65 — 1.05 kg/cm^2, (9.2 — 14.9 psi, 63.7 — 103.0 kPa). The vacuum valve opens to alleviate the vacuum which develops in the coolant system after the engine is stopped and the coolant temperature drops. The valve's opening allows the pressure in the cooling system to return to the coolant in the reservoir tank.

RESERVOIR TANK

The reservoir tank is used to catch coolant which overflows the cooling system as a result of volumetric expansion when the coolant is heated. The coolant in the reservoir tank returns to the radiator when the coolant temperature drops, thus keeping the radiator full at all times and avoiding needless coolant loss. Check the reservoir tank level to see if the coolant needs to be replenished.

WATER PUMP

The water pump is used for forced circulation of coolant through the cooling system. It is mounted on the front of the cylinder block and driven by a V-ribbed belt.

THERMOSTAT

The thermostat is a wax type one and is mounted in the water outlet housing. The thermostat includes a type of automatic valve operated by fluctuations in the coolant temperature. This valve closes when the coolant temperature drops, preventing the circulation of coolant through the engine and thus permitting the engine to warm up rapidly. The valve opens when the coolant temperature has risen, allowing the circulation of coolant. Wax inside the thermostat expands when heated and contracts when cooled. Heating the wax thus generates pressure which overpowers the force of the spring which keeps the valve closed, thus opening the valve. When the wax cools, its contraction causes the force of the spring to take effect once more, closing the valve. The thermostat in this engine operates at a temperature of 88°C (190°F).

TROUBLESHOOTING

Problem	Possible cause	Remedy	Page
Engine overheats	Alternator drive belt loose or missing	Adjust or replace belt	CH-3
	Dirt, leaves or insects in radiator or condenser	Clean radiator or condenser	
	Hoses, water pump, water outlet housing, radiator, heater, core plugs or head gasket leakage	Repair as necessary	
	Thermostat faulty	Check thermostat	CO-8
	Ignition timing retarded	Set timing	IG-20
	Fluid coupling faulty	Replace fluid coupling	CO-6
	Radiator hose plugged or rotted	Replace hose	
	Water pump faulty	Replace water pump	CO-6
	Radiator plugged or cap faulty	Check radiator	CO-9
	Cylinder head or block cracked or plugged	Repair as necessary	

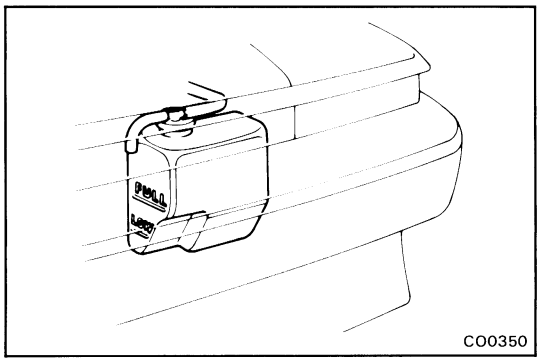

CHECK AND REPLACEMENT OF ENGINE COOLANT

1. CHECK ENGINE COOLANT LEVEL AT RESERVE TANK

The coolant level should be between the "LOW" and "FULL" lines at low temperature.

If low, check for leaks and add coolant up to the "FULL" line.

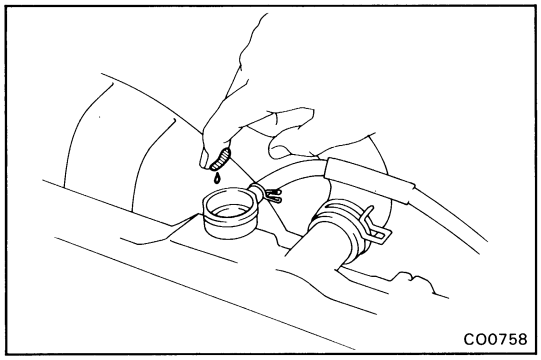

2. CHECK ENGINE COOLANT QUALITY

There should not be any excessive deposits of rust or scales around the radiator cap or radiator filler hole, and the coolant should be free from oil.

If excessively dirty, replace the coolant.

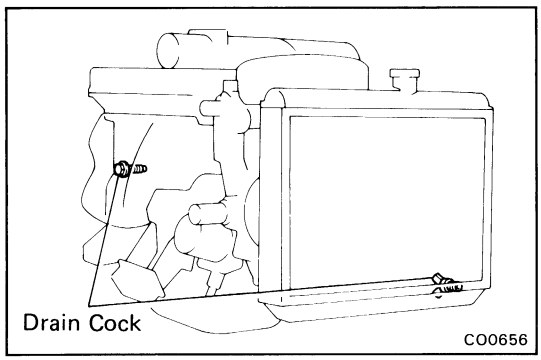

3. REPLACE ENGINE COOLANT

(a) Remove the radiator cap.

CAUTION: To avoid the danger of being burned, do not remove it while the engine and radiator are still hot, as fluid and steam can be blown out under pressure.

(b) Drain the coolant from radiator and engine drain cocks.(Engine drain is at right rear of cylinder block.)

(c) Apply sealant to the threads of the engine drain cock.

Sealant: Part No. 08833-00070, THREE BOND 1324 or equivalent

(d) Close the drain cocks.

Torque (Engine drain cock):
350 kg-cm (25 ft-lb, 34 N·m)

(e) Fill system with coolant.

Use a good brand of ethylene-glycol base coolant, mixed according to the manufacturer's directions.

Using coolant which includes more than 50% ethylene-glycol (but not more than 70%) is recommended.

NOTICE:
- **Do not use alcohol type coolant.**
- **The coolant should be mixed with demineralized water or distilled water.**

Capacity:

7M-GE
M/T 8.1 liters (8.5 US qts, 7.1 Imp. qts)
A/T 8.0 liters (8.5 US qts, 7.0 Imp. qts)

7M-GTE
M/T 8.2 liters (8.7 US qts, 7.2 Imp. qts)
A/T 8.1 liters (8.5 US qts, 7.1 Imp. qts)

(f) Install the radiator cap.

(g) Start the engine and check for leaks.

(h) Recheck the coolant level and refill as necessary.

WATER PUMP

COMPONENTS

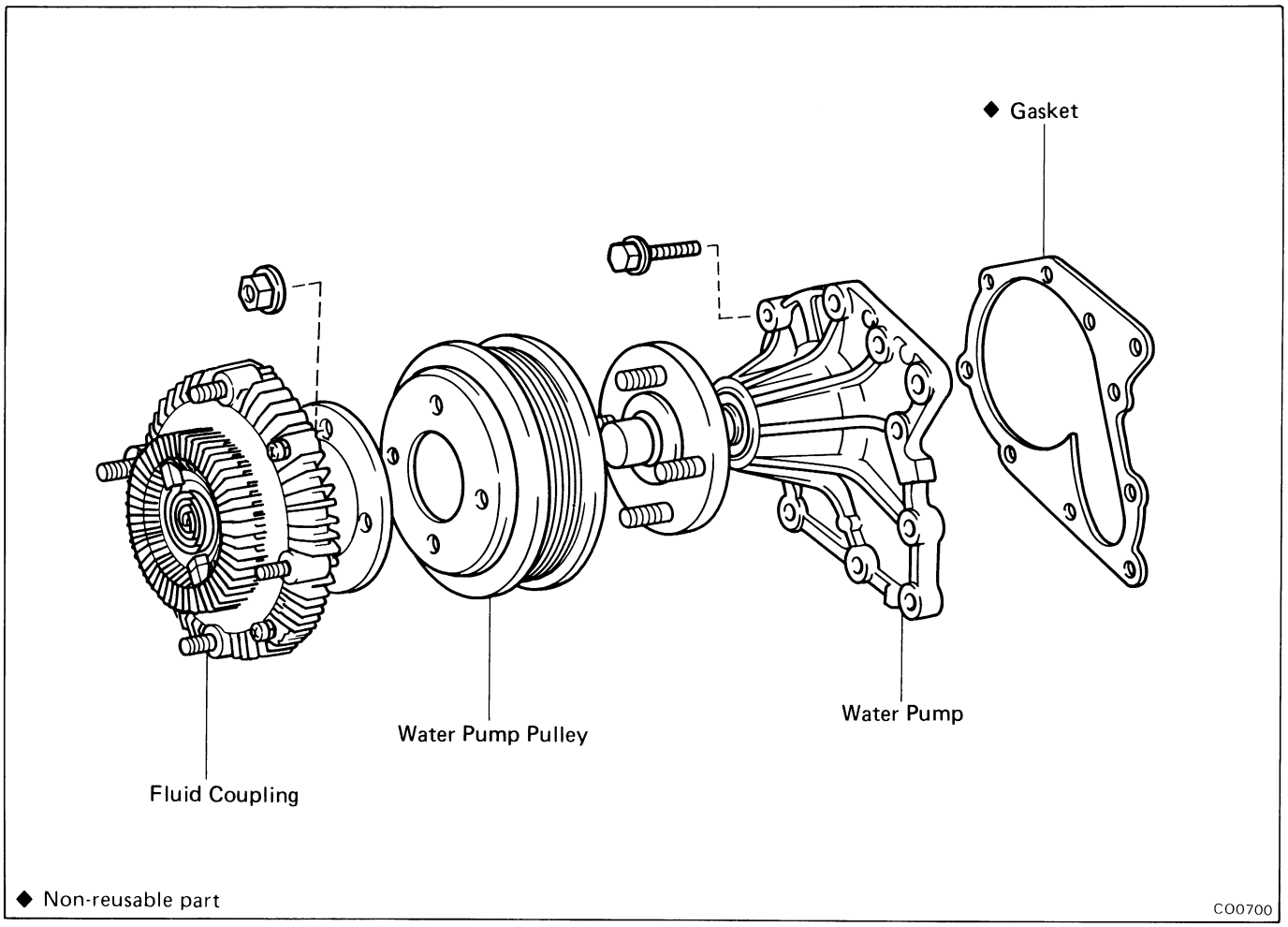

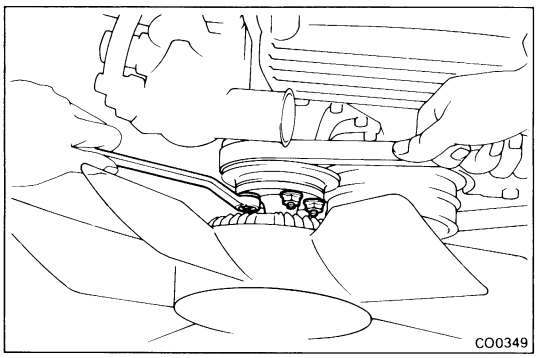

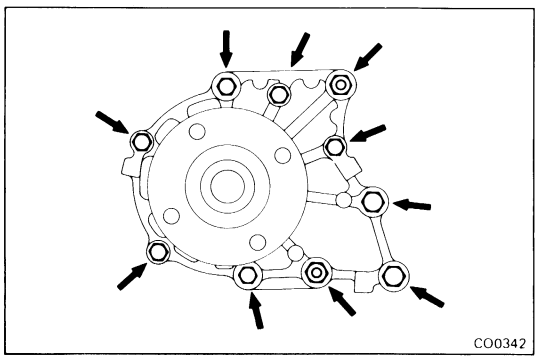

REMOVAL OF WATER PUMP

1. **DRAIN COOLANT**
2. **REMOVE A/C BELT**
3. **REMOVE ALTERNATOR DRIVE BELT, FLUID COUPLING AND WATER PUMP PULLEY**
   (a) Loosen the water pump pulley set nuts.
   (b) Loosen the pivot bolt, adjusting bolt and nut, and remove the drive belt.
   (c) Remove the four nuts, fluid coupling and water pump pulley.
   (d) Remove the fan from the fluid coupling.
4. **REMOVE PS AIR PIPE**
5. **REMOVE WATER PUMP**
   Remove the eight bolts and two nuts, and remove the water pump and gasket.

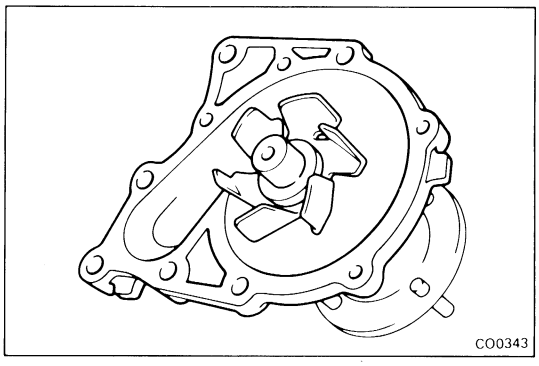

INSPECTION OF WATER PUMP

1. **INSPECT WATER PUMP BODY AND TIMING BELT CASE**

   Check the water pump body and timing belt case for cracks and damaged gasket surfaces.

   If necessary, replace the water pump or timing belt case.

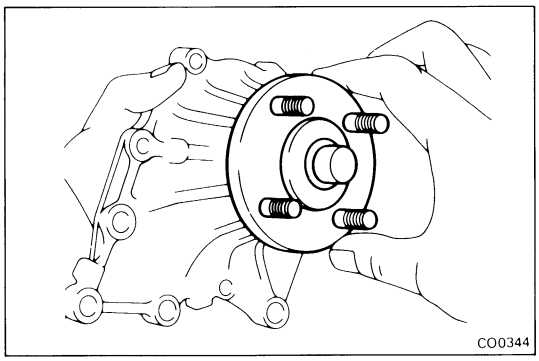

2. **INSPECT WATER PUMP BEARING**

   Turn the pulley and check that the water pump bearing moves smoothly and quietly.

   If necessary, replace the water pump.

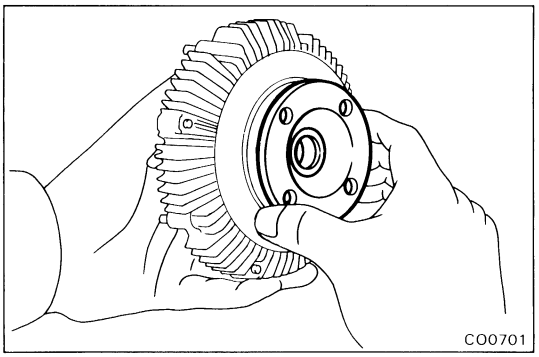

3. **INSPECT FLUID COUPLING**

   Check that the fluid coupling is not damaged and that no silicon oil leaks.

   If necessary, replace the fluid coupling.

INSTALLATION OF WATER PUMP

(See page CO-6)

1. **INSTALL WATER PUMP**

   Install the water pump on a new gasket with the eight bolts and two nuts.

   Torque:
   10 mm bolt
   90 kg-cm (78 in.-lb, 8.8 N·m)
   12 mm head bolt and nut
   195 kg-cm (14 ft-lb, 20 N·m)

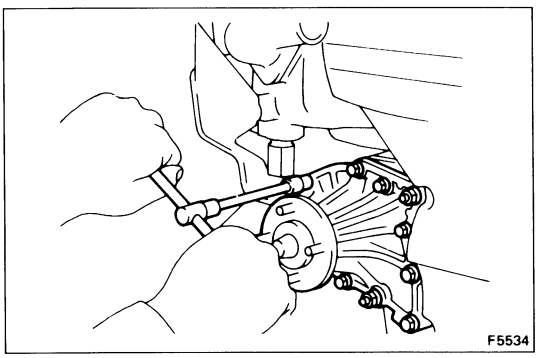

2. **INSTALL PS AIR PIPE**

3. **INSTALL WATER PUMP PULLEY, FLUID COUPLING AND ALTERNATOR DRIVE BELT**

   (a) Install the water pump pulley and fluid coupling with the four nuts.

   (b) Place the fan belt on to each pulley.

   (c) Stretch the belt tight and tighten the four nuts.

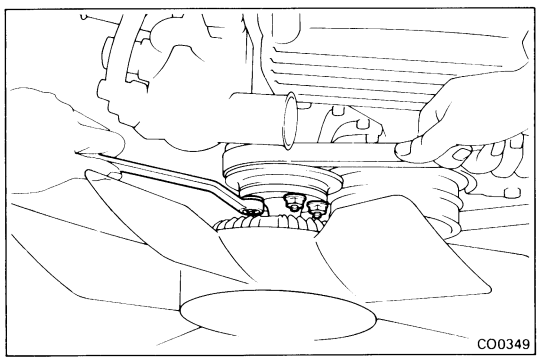

4. **INSTALL A/C BELT**

5. **ADJUST ALTERNATOR DRIVE BELT TENSION**
   (See page MA-4)

6. **FILL WITH COOLANT**

7. **START ENGINE AND CHECK FOR LEAKS**

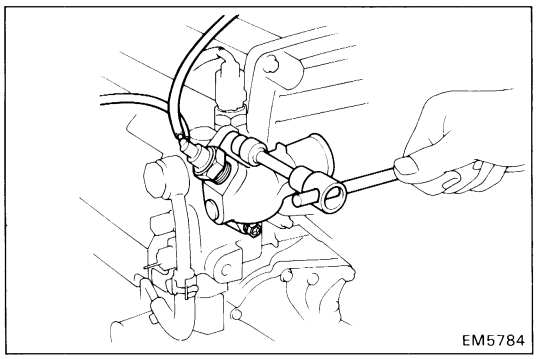

THERMOSTAT

REMOVAL OF THERMOSTAT

1. DRAIN COOLANT

2. REMOVE WATER OUTLET AND THERMOSTAT

(a) Remove the two bolts, water outlet and thermostat with gasket from the water outlet housing.

(b) Remove the gasket from the thermostat.

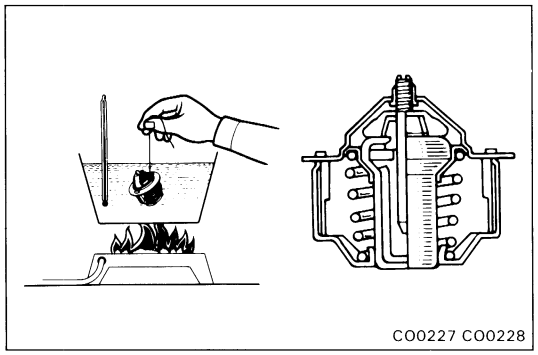

INSPECTION OF THERMOSTAT

INSPECT THERMOSTAT

HINT: Thermostat is numbered according to the valve opening temperature.

(a) Immerse the thermostat in water and heat the water gradually.

(b) Check the valve opening temperature.

Valve opening temperature:
86 – 90°C (187 – 194°F)

If the valve opening temperature is not within specification, replace the thermostat.

(c) Check the valve lift.

Valve lift:
8 mm (0.31 in.) or more at 100°C (212°F)

If the valve lift is less than specification, replace the thermostat.

(d) Check that the valve spring is tight when the thermostat is fully closed.

If necessary, replace the thermostat.

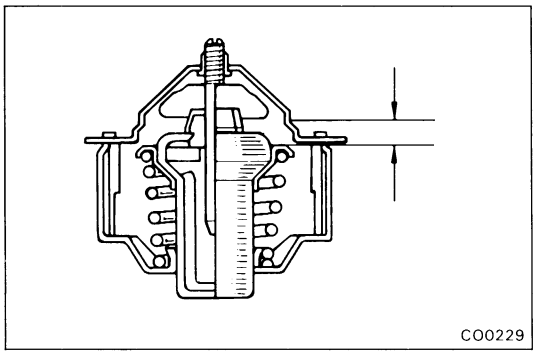

INSTALLATION OF THERMOSTAT

1. INSTALL THERMOSTAT AND WATER OUTLET

(a) Place a new gasket to the thermostat.

(b) Install the thermostat with the jiggle valve facing upward as shown in the illustration, and water outlet with the two bolts.

Torque: 80 kg-cm (69 in.-lb, 7.8 N·m)

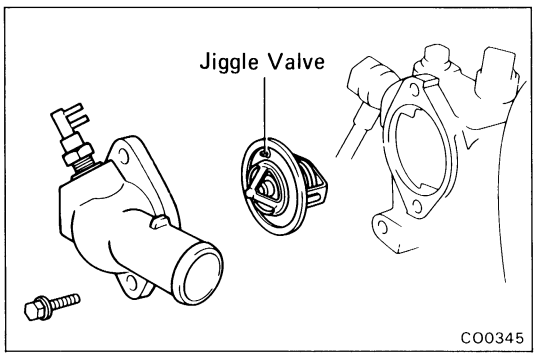

2. FILL WITH COOLANT

3. START ENGINE AND CHECK FOR LEAKS

RADIATOR

CLEANING OF RADIATOR

Using water or a steam cleaner, remove any mud and dirt from the radiator core.

NOTICE: If using a high pressure type cleaner, be careful not to deform the fins of the radiator core. If the cleaner nozzle pressure is 30 — 35 kg/cm² (427 — 498 psi, 2,942 — 3,432), keep a distance of at least 40 — 50 cm (15.75 — 19.69 in.) between the radiator core and cleaner nozzle.

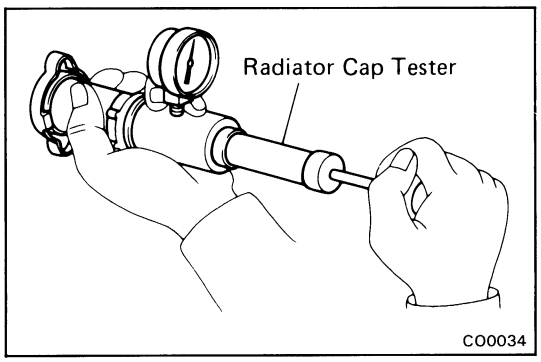

INSPECTION OF RADIATOR

1. **CHECK RADIATOR CAP**

Using a radiator cap tester, pump tester until the relief valve opens. Check that the valve opens between 0.75 kg/cm² (10.7 psi, 74 kPa) and 1.05 kg/cm² (14.9 psi, 103 kPa).

Check that the pressure gauge does not drop rapidly when pressure on the cap is below 0.6 kg/cm² (8.5 psi, 59 kPa).

If either check is not within limits, replace cap.

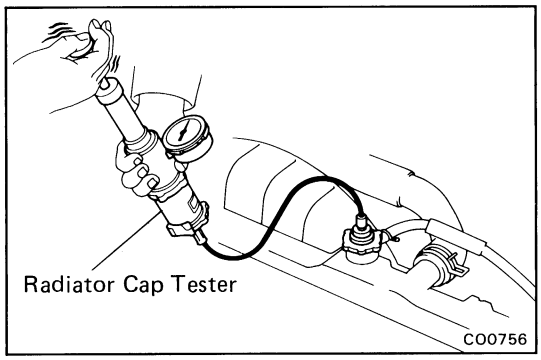

2. **CHECK COOLING SYSTEM FOR LEAKS**

(a) Fill the radiator with coolant and attach a pressure tester.

(b) Warm up the engine.

(c) Pump it to 1.2 kg/cm² (17.1 psi, 118 kPa), check that pressure does not drop.

If the pressure drops, check for leaks from the hoses, radiator or water pump. If no external leaks are found, check the heater core, cylinder block and head.

REMOVAL OF RADIATOR

1. **DRAIN COOLANT**

2. **DISCONNECT CONDENSER FAN MOTOR CONNECTOR**

3. **DISCONNECT RADIATOR HOSES**

4. **DISCONNECT COOLANT RESERVOIR HOSE**

5. **(A/T)**
DISCONNECT A/T COOLER HOSES

HINT:
- Be careful as some oil will leak out. Catch it in a suitable container.
- Plug the pipe to prevent oil from escaping.

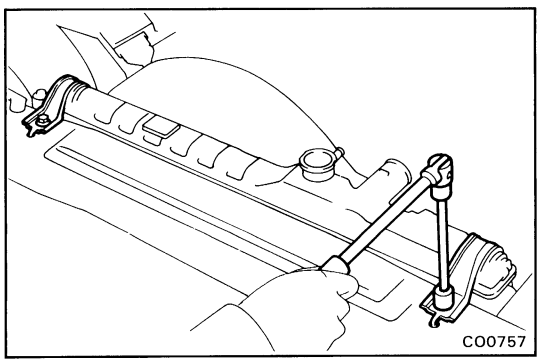

6. **REMOVE RADIATOR SUPPORTS AND RADIATOR**

7. **REMOVE CONDENSER FAN MOTORS**

COMPONENTS

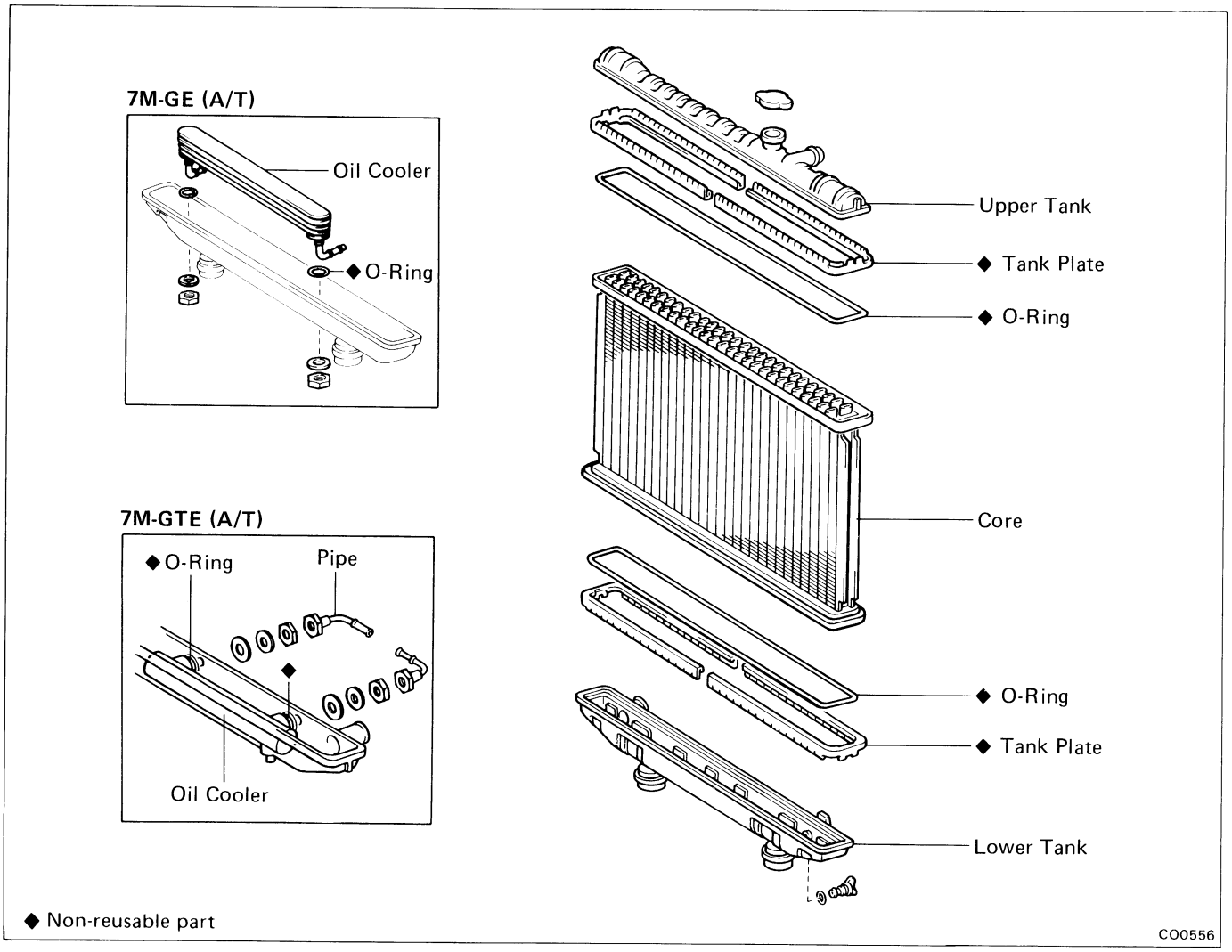

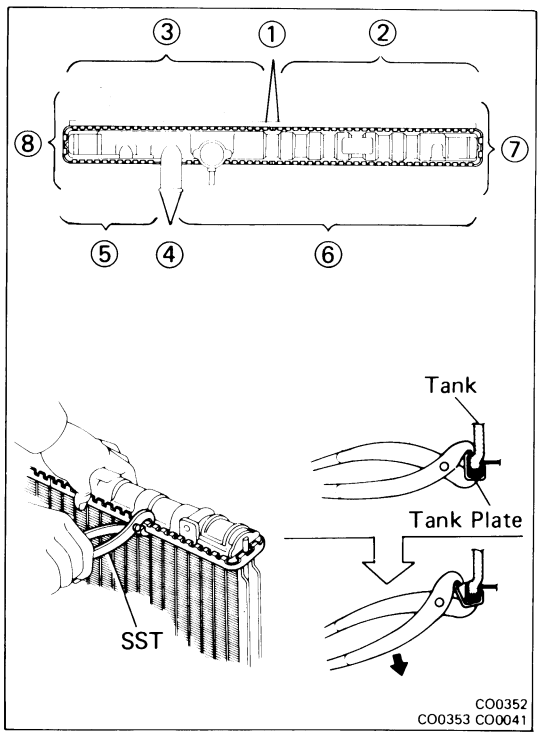

DISASSEMBLY OF RADIATOR

1. REMOVE TANK PLATE

(a) Raise the claws of the tank plates with SST in the numerical order shown in the figure.

SST 09230-00010

HINT: Be careful not to damage the core plate.

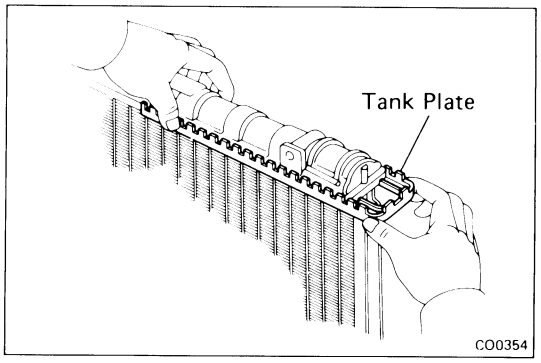

(b) Pull the tank plates outward.

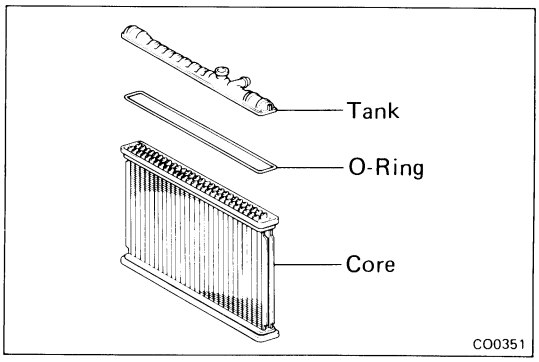

2. REMOVE TANK AND O-RING

(a) Pull the tank upward.

(b) Remove the O-ring.

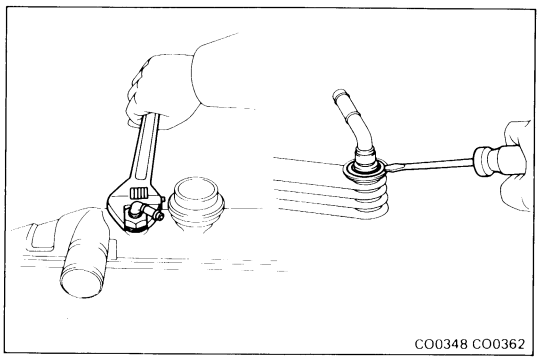

3. (A/T)
REMOVE OIL COOLER FROM LOWER TANK

(a) 7M-GE
Remove the pipes.

HINT: Make a note of the direction the pipes face.

(b) Remove the nuts, spring washers, plate washers and oil cooler.

(c) Remove the O-rings from the oil cooler.

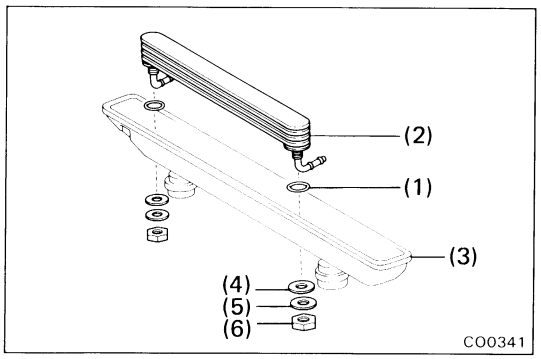

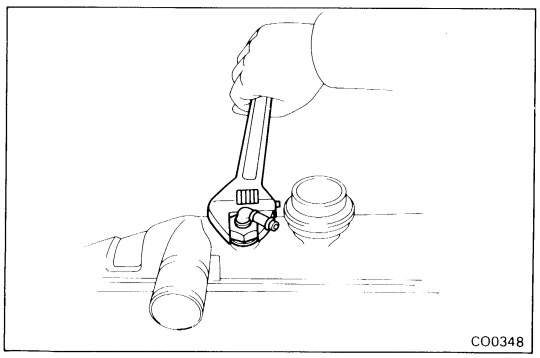

ASSEMBLY OF RADIATOR

(See page CO-10)

1. INSTALL OIL COOLER TO LOWER TANK [7M-GE (A/T)]

(a) Clean the O-ring contact surface of the lower tank and oil cooler.

(b) Install new O-rings (1) to the oil cooler (2).

(c) Install the oil cooler (2) with O-rings (1) to the lower tank (3).

(d) Install the plate washers (4), spring washers (5), and nuts (6). Torque the nuts (6).

Torque: 220 kg-cm (16 ft-lb, 22 N·m)

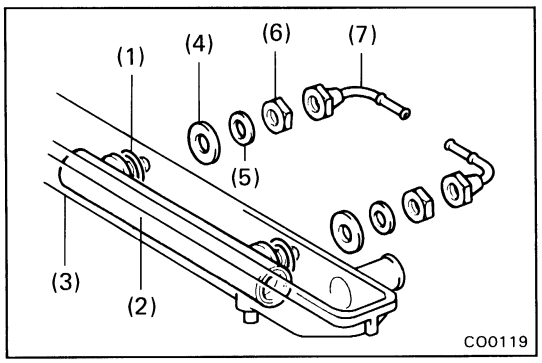

[7M-GTE (A/T)]

(a) Clean the O-ring contact surface of the lower tank and oil cooler.

(b) Install new O-rings (1) to the oil cooler (2).

(c) Install the oil cooler (2) with the O-rings (1) to the lower tank (3).

(d) Install the plate washers (4), spring washers (5) and nuts (6). Torque the nuts (6).

Torque: 220 kg-cm (16 ft-lb, 22 N·m)

(e) Install the pipes (7).

Torque: 150 kg-cm (11 ft-lb, 15 N·m)

HINT: Face the pipes in the same direction they were before disassembly.

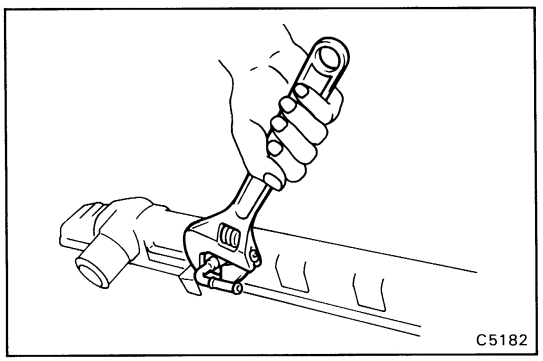

2. INSPECT CORE PLATE

Inspect the core plate for damage.

HINT:

- If the sides of the core plate groove are deformed, reassembly of the tank will be impossible. Therefore, first correct any deformation with pliers.
- Water leakage will result if the bottom of the core plate groove is damaged or dented.
  Therefore, repair or replace if damaged.

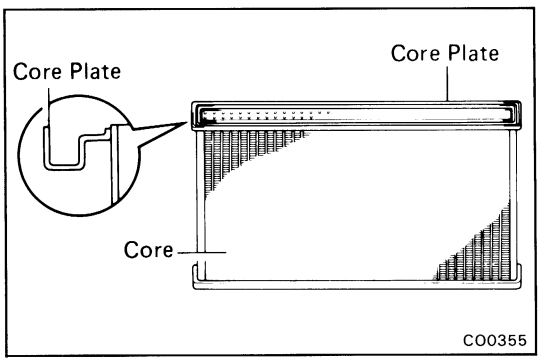

3. INSTALL NEW O-RING AND TANK

HINT:

- Clean the tank and core plate.

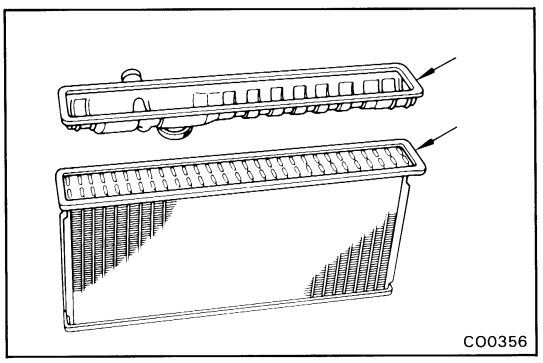

- Take out any twists.

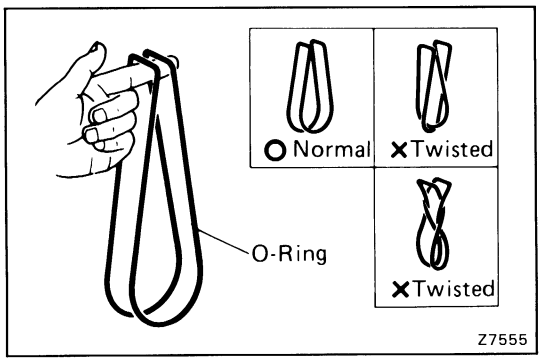

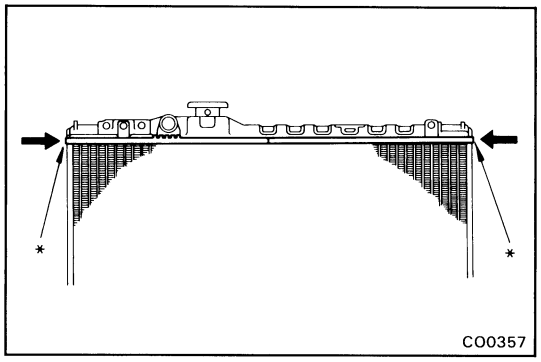

4. INSTALL TANK PLATE

Insert the tank plates from both ends in the direction of the arrows. Insert to where the portions marked "*" make contact with the tank.

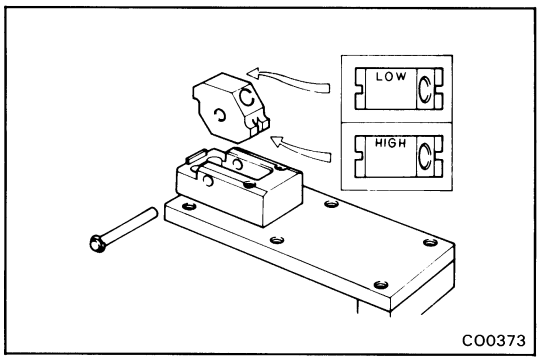

5. STAKE CLAW OF TANK PLATE

(a) Set the punch on SST to "LOW."

SST 09230-00010

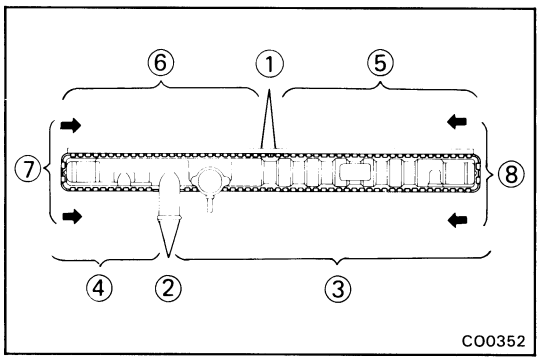

(b) Stake the claws of the tank plates with SST in the numerical order shown in the illustration.

SST 09230-00010

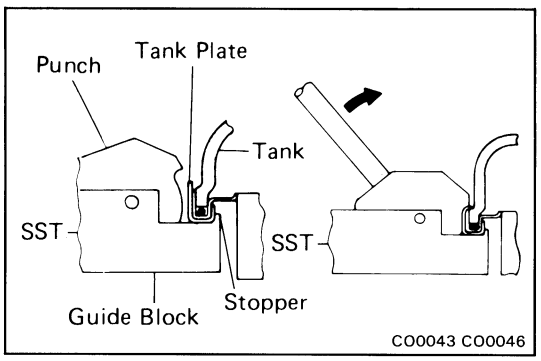

NOTICE: If the bottom of the core plate is staked with the SST on the guide block stopper, it may result in water leakage.

SST 09230-00010

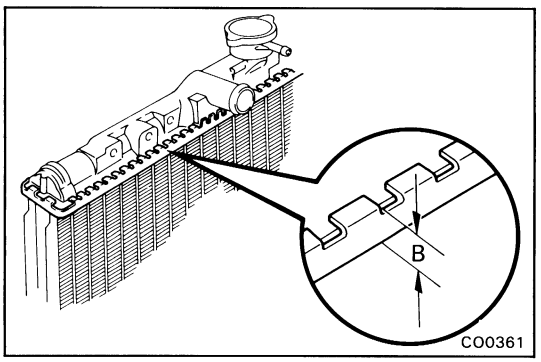

HINT:

- Stake with just enough pressure to leave a mark on the claw. The staked plate height "B" should be as follows:

Plate height: 9.18 — 9.53 mm (0.3614 — 0.3752 in.)

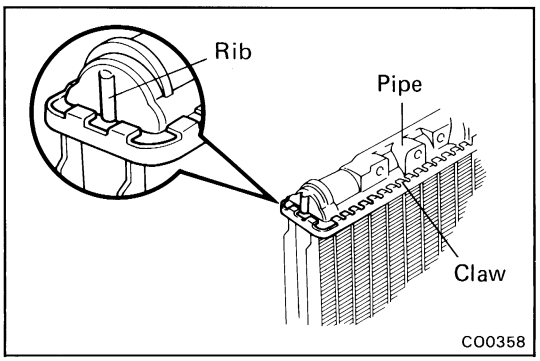

- Do not stake the areas protruding around the pipes, brackets or tank ribs.

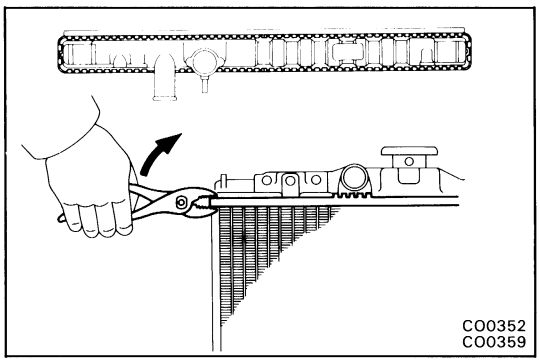

- The points shown in the illustration cannot be staked with the SST. Use pliers and be careful not to damage the core plate.

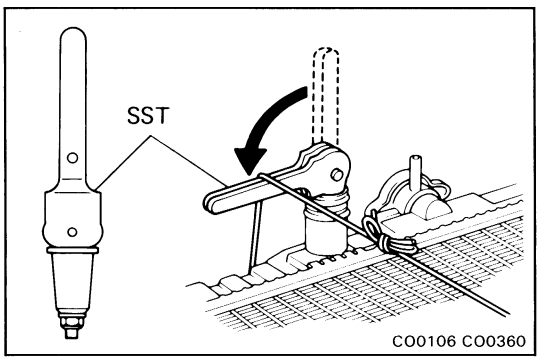

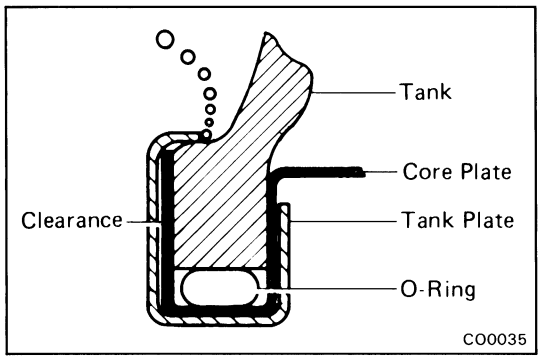

6. INSPECT FOR WATER LEAKS

(a) Tighten the drain plug.

(b) Plug the oil cooler pipes to prevent any water leakage into the oil cooler.

(c) Plug the inlet and outlet pipes of the radiator with SST.

SST 09230-00010

(d) Using a radiator tester, apply pressure to the radiator.

Test pressure: 1.5 kg/cm² (21 psi, 147 kPa)

(e) Inspect for water leaks.

HINT: On radiators with resin tanks, there is a clearance between the core plate and tank plate where a minute amount of air will remain, giving the appearance of an air leak when the radiator is submerged in water. Therefore, before performing the water leak test, first swish the radiator around in the water until all air bubbles disappear.

7. PAINT TANK PLATES

HINT: If the water leak test checks out okay, allow the radiator to completely dry and then paint the tank plates.

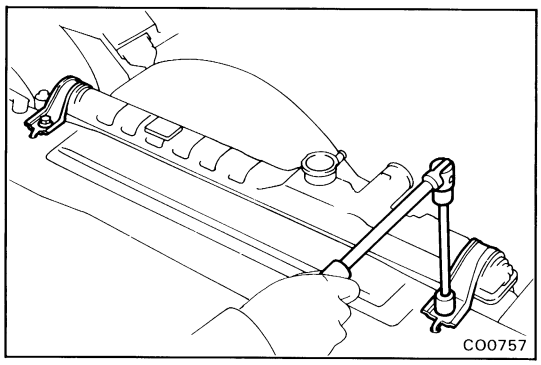

INSTALLATION OF RADIATOR

1. **INSTALL CONDENSER FAN MOTORS**
2. **INSTALL RADIATOR**
   Place the radiator in installed position and install the supports with the bolts.
3. **(A/T)**
   CONNECT A/T COOLER HOSES
4. **CONNECT COOLANT RESERVOIR HOSE**
5. **CONNECT RADIATOR HOSES**
6. **CONNECT CONDENSER FAN MOTOR CONNECTORS**
7. **FILL WITH COOLANT**
   (See page CO-5)
8. **START ENGINE AND CHECK FOR LEAKS**
9. **(A/T)**
   CHECK AUTOMATIC TRANSMISSION FLUID LEVEL
   (See page AT-18)

LUBRICATION SYSTEM

	Page
DESCRIPTION	LU-2
TROUBLESHOOTING	LU-4
OIL PRESSURE CHECK	LU-4
REPLACEMENT OF ENGINE OIL AND OIL FILTER	LU-5
OIL PUMP	LU-7
OIL COOLER AND RELIEF VALVE (7M-GTE)	LU-15

DESCRIPTION

A fully pressurized, fully filtered lubrication system has been adopted for this engine.

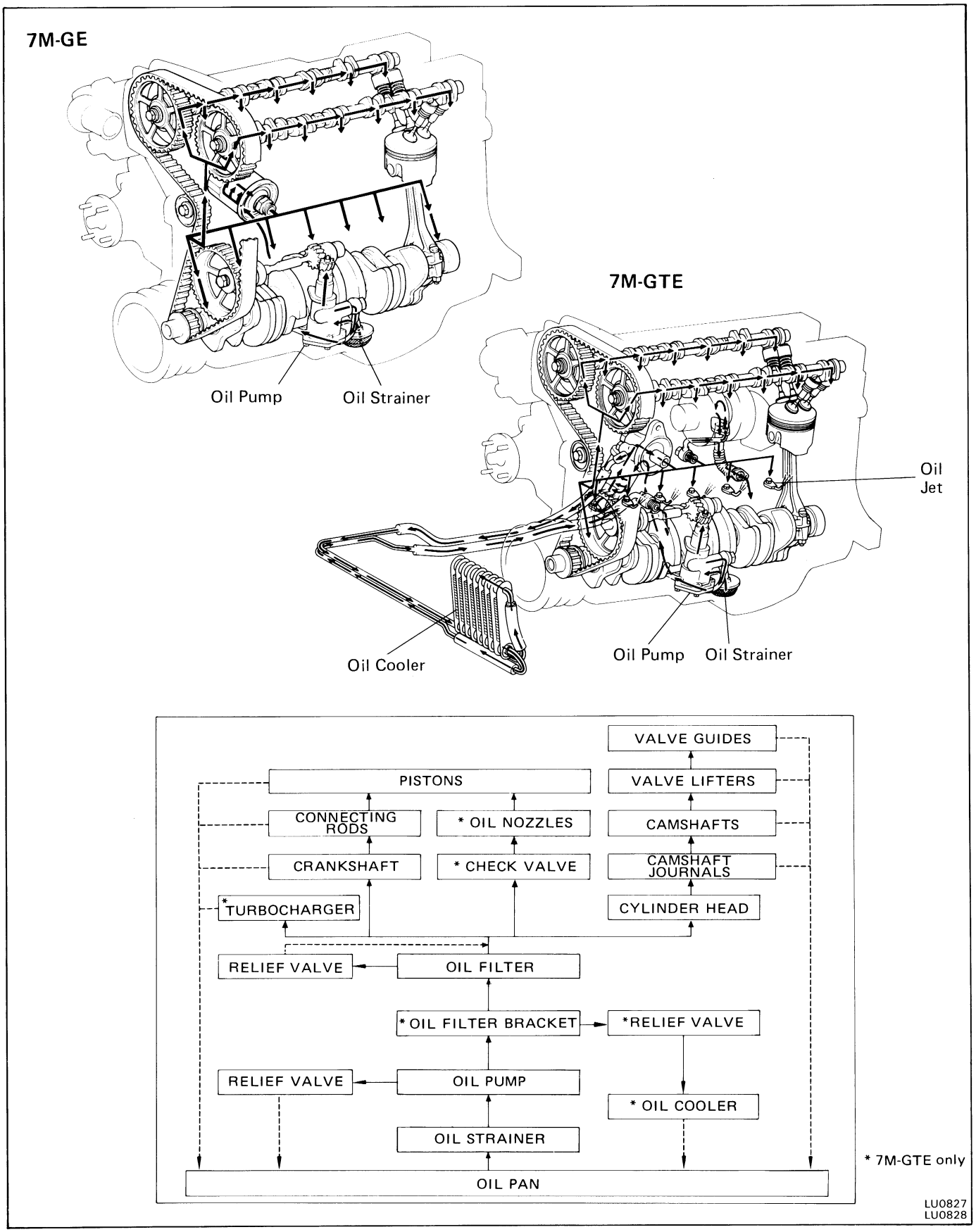

A pressure feeding lubrication system has been adopted to supply oil to the moving parts of this engine. The lubrication system consists of an oil pan, oil pump, oil filter and other external parts which supply oil to the moving parts in the engine block. The oil circuit is shown in the illustration at the top of the previous page. Oil from the oil pan is pumped up by the oil pump. After it passes through the oil filter, it is fed through the various oil holes in the crankshaft and cylinder block. After passing through the cylinder block and performing its lubricating function, the oil is returned by gravity to the oil pan. A dipstick on the side of the cylinder block is provided to check the oil level.

OIL PUMP

The oil pump pumps up oil from the oil pan and sends it under pressure to the various parts of the engine. An oil strainer is mounted in front of the inlet to the oil pump. The oil pump itself is a gear pump, which uses a drive gear and driven gear inside the pump body. When the drive gear rotates, the driven gear rotates in the opposite direction. When the gear teeth disengage oil is drawn in, and when the gear teeth engage oil is discharged.

OIL PRESSURE REGULATOR

At high engine speeds, the engine oil supplied by the oil pump exceeds the capacity of the engine to utilize it. For that reason, the oil pressure regulator works to prevent an oversupply of oil. During normal oil supply, a coil spring and valve keep the bypass closed, but when too much oil is being fed, the pressure becomes extremely high, overpowering the force of the spring and opening the valves. This allows the excess oil to flow through the valve and return to the oil pan.

OIL FILTER

The oil filter is a full flow type filter with a built-in paper filter element. Particles of metal from wear, airborne dirt, carbon and other impurities can get in the oil during use and could cause accelerated wear or siezing if allowed to circulate through the engine. The oil filter, integrated into the oil line, removes these impurities as the oil passes through it. The filter is mounted outside the engine to simplify replacement of the filter element. A relief valve is also included ahead of the filter element to relieve the high oil pressure in case the filter element becomes clogged with impurities. The relief valve opens when the oil pressure overpowers the force of the spring. Oil passing through the relief valve bypasses the oil filter and flows directly into the main oil hole in the engine.

TROUBLESHOOTING

Problem	Possible cause	Remedy	Page
Oil leakage	Cylinder head, cylinder block or oil pump body damaged or cracked	Repair as necessary	
	Oil seal faulty	Replace oil seal	EM-81
	Gasket faulty	Replace gasket	
Low oil pressure	Oil leakage	Repair as necessary	
	Relief valve faulty	Repair relief valve	LU-7
	Oil pump faulty	Repair oil pump	LU-7
	Engine oil poor quality	Replace engine oil	LU-5
	Crankshaft bearing faulty	Replace bearing	EM-63
	Connecting rod bearing faulty	Replace bearing	EM-63
	Oil filter clogged	Replace oil filter	LU-5
High oil pressure	Relief valve faulty	Repair relief valve	LU-7

Recommended Viscosity (SAE):

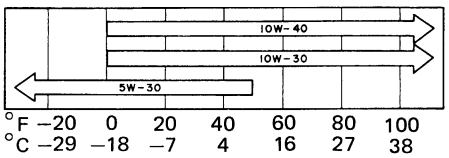

TEMPERATURE RANGE ANTICIPATED BEFORE NEXT OIL CHANGE

LU0884

OIL PRESSURE CHECK

1. CHECK OIL QUALITY

Check the oil for deterioration, entry of water, discoloring or thinning.

If oil quality is poor, replace.

Use API grade SG, multigrade, fuel-efficient and recommended viscosity oil.

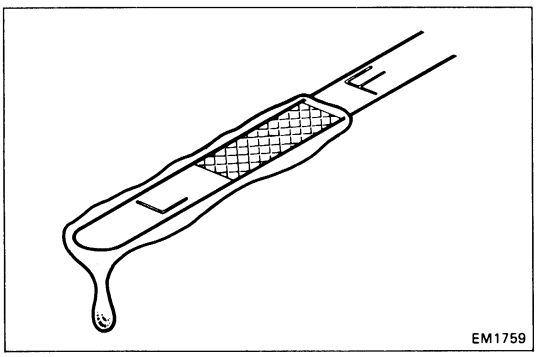

EM1759

2. CHECK OIL LEVEL

The oil level should be between the "L" and "F" marks on the dipstick.

If low, check for leakage and add oil up to the "F" mark.

3. REMOVE OIL PRESSURE SENDER GAUGE

4. INSTALL OIL PRESSURE GAUGE

5. START ENGINE

Start engine and warm it up to normal operating temperature.

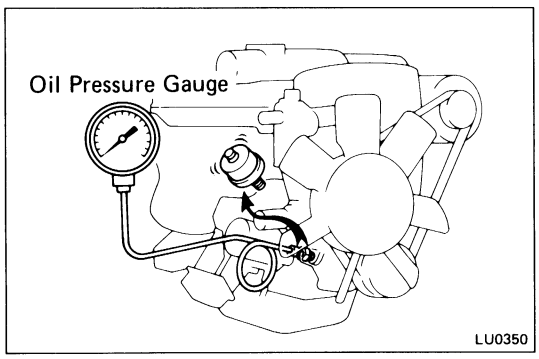

LU0350

6. MEASURE OIL PRESSURE

Oil pressure:

At idle speed	**0.3 kg/cm² (4.3 psi, 29 kPa) or more**
At 3,000 rpm	**2.5 — 5.0 kg/cm² (36 — 71 psi, 245 — 490 kPa)**

HINT: Check for oil leakage after reinstalling the oil pressure sender gauge.

REPLACEMENT OF ENGINE OIL AND OIL FILTER

NOTICE:

- **Prolonged and repeated contact with mineral oil will result in the removal of natural fats from the skin, leading to dryness, irritation and dermatitis. In addition, used engine oil contains potentially harmful contaminants which may cause skin cancer.**
  Adequate means of skin protection and washing facilities should be provided.
- **Care should be taken, therefore, when changing engine oil, to minimize the frequency and length of time your skin is exposed to used engine oil. Protective clothing and gloves, that cannot be penetrated by oil, should be worn. The skin should be thoroughly washed with soap and water, or use waterless hand cleaner, to remove any used engine oil. Do not use gasoline, thinners, or solvents.**
- **In order to preserve the environment, used oil must be disposed of only at designated disposal sites.**

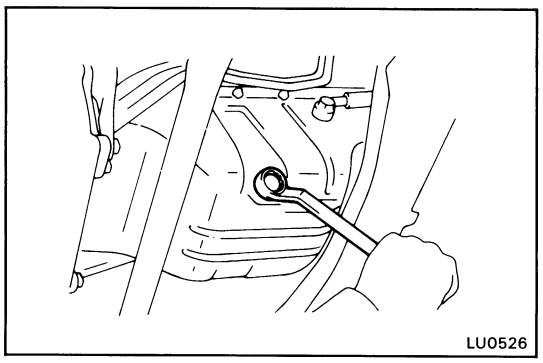

1. DRAIN ENGINE OIL

(a) Remove the oil filler cap.

(b) Remove the oil drain plug and drain the oil into a container.

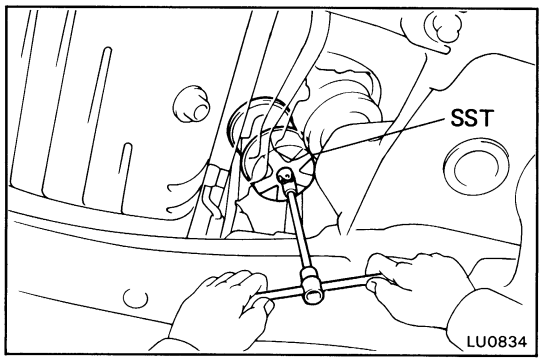

2. REPLACE OIL FILTER

(a) Using SST, remove the oil filter (located on right side of the engine block).

SST 09228-07500

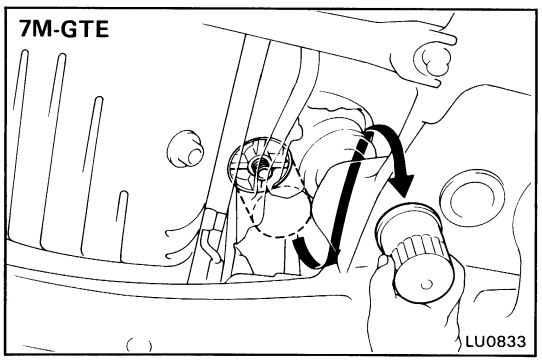

HINT (7M-GTE): Remove the oil filter taking it over the engine mounting bracket and down between the bracket and No. 1 suspension crossmember.

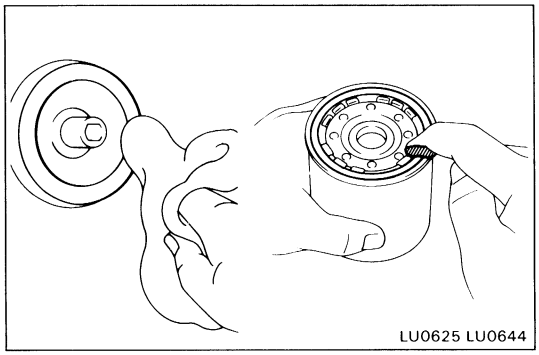

(b) Clean and check the oil filter installation surface.

(c) Apply clean engine oil to the gasket of the new oil filter.

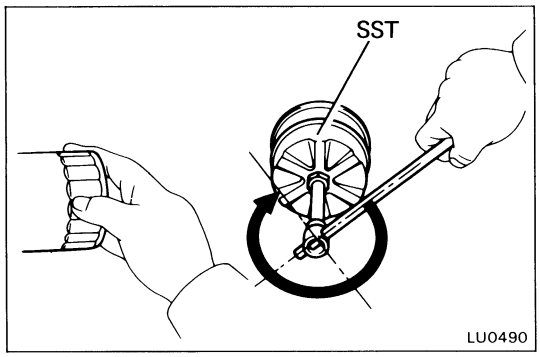

(d) Lightly screw in the oil filter until you feel resistance.

(e) Then, using SST, tighten the oil filter an extra 3/4 turn.

SST 09228-07500

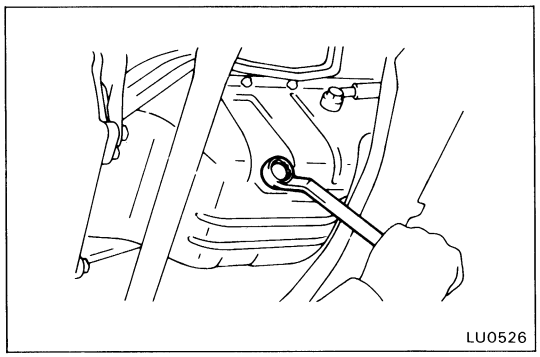

3. FILL WITH ENGINE OIL

(a) Clean and install the oil drain plug with a new gasket.

Torque: 350 kg-cm (25 ft-lb, 34 N•m)

(b) Fill the engine with new oil API grade SG, multigrade, fuel-efficient and recommended viscosity oil.

Oil capacity (7M-GE):
Dry fill
4.9 liters (5.2 US qts, 4.3 Imp. qts)
Drain and refill
w/o Oil filter change
4.1 liters (4.3 US qts, 3.6 Imp. qts)
w/ Oil filter change
4.4 liters (4.7 US qts, 4.4 Imp. qts)

Oil capacity (7M-GTE):
Dry fill
5.1 liters (5.4 US qts, 4.5 Imp. qts)
Drain and refill
w/o Oil filter change
4.1 liters (4.3 US qts, 3.6 Imp. qts)
w/ Oil filter change
4.4 liters (4.7 US qts, 3.9 Imp. qts)

4. START ENGINE AND CHECK FOR LEAKS

5. RECHECK ENGINE OIL LEVER (See page LU-4)

OIL PUMP

COMPONENTS

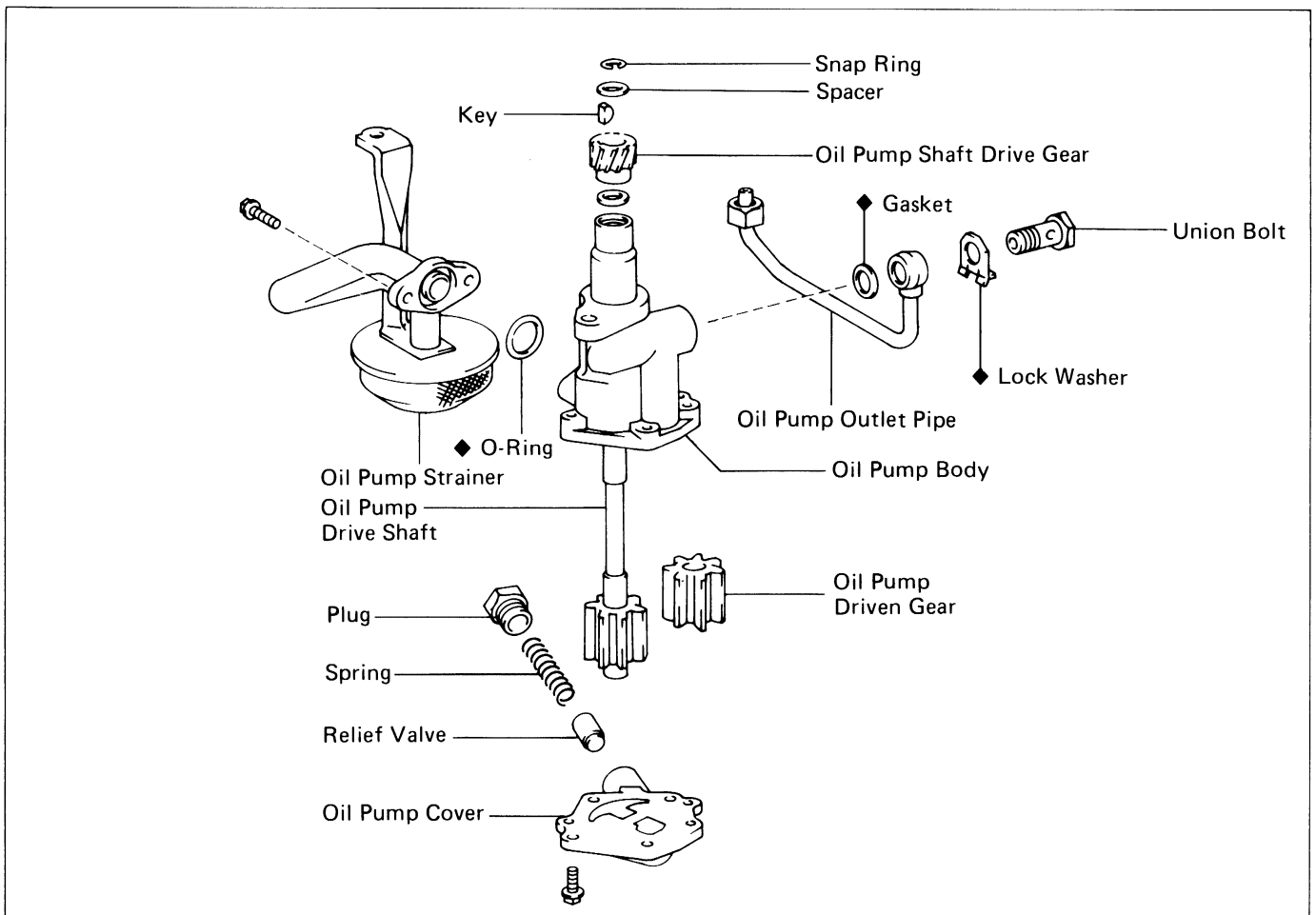

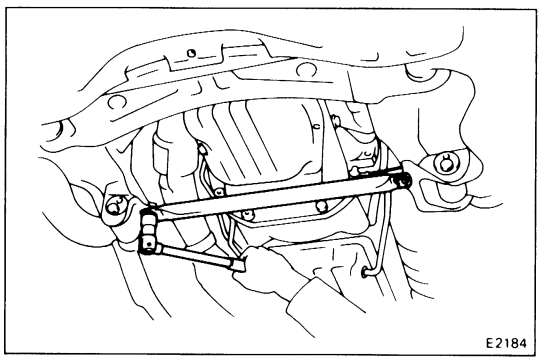

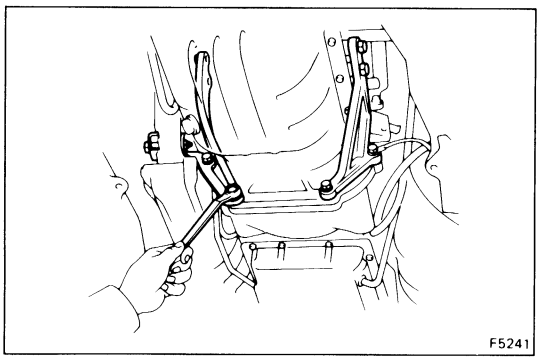

REMOVAL OF OIL PUMP

1. REMOVE HOOD
2. REMOVE ENGINE UNDER COVER
3. DRAIN ENGINE OIL
4. (A/T)
   REMOVE A/T OIL COOLER HOSE CLAMP
5. REMOVE NO. 1 FRONT SUSPENSION CROSSMEMBER
6. REMOVE EXHAUST FRONT PIPE BRACKET AND STIFFENER PLATES
7. (7M-GTE)
   DISCONNECT ENGINE OIL COOLER HOSE FROM OIL PAN

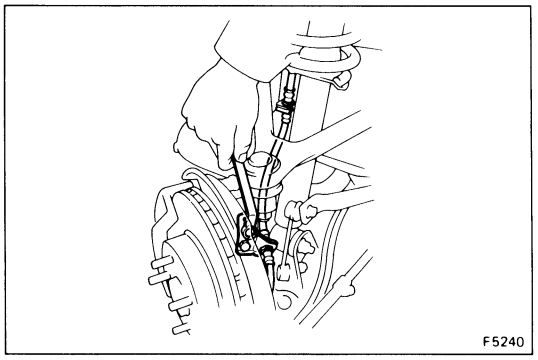

8. REMOVE BRAKE HOSE BRACKETS AND CLIPS

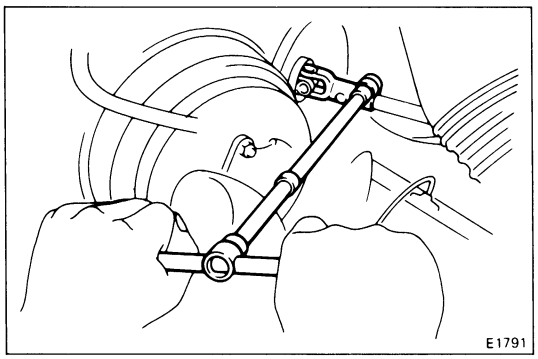

9. DISCONNECT INTERMEDIATE SHAFT

Loosen the bolt, disconnect the intermediate shaft.

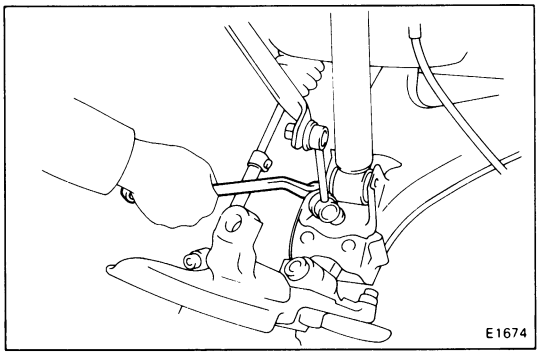

10. DISCONNECT STABILIZER BAR LINKS FROM LOWER ARMS

11. REMOVE ENGINE MOUNTING NUTS AND WASHERS

Attach the engine hoist chain to the two engine hangers.

12. REMOVE TEMS ACTUATOR

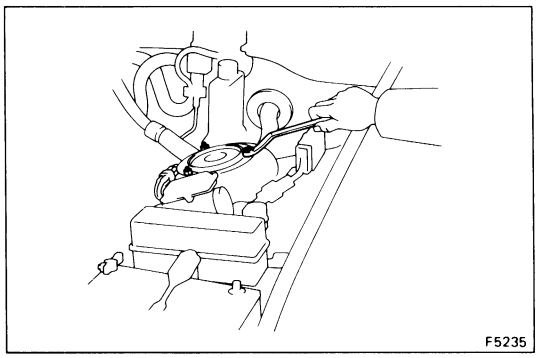

13. REMOVE SHOCK ABSORBERS FROM BODY

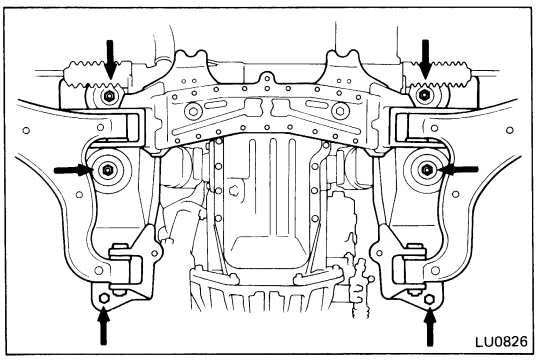

14. DISCONNECT FRONT SUSPENSION MEMBER

(a) Hold the front suspension member with a jack.

(b) Remove the two bolts and four nuts.

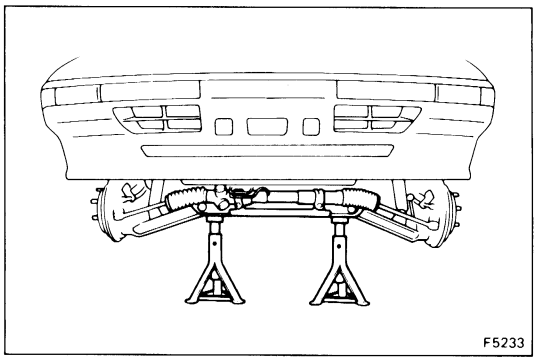

(c) Lower the front suspension member, hold the member with safety stands.

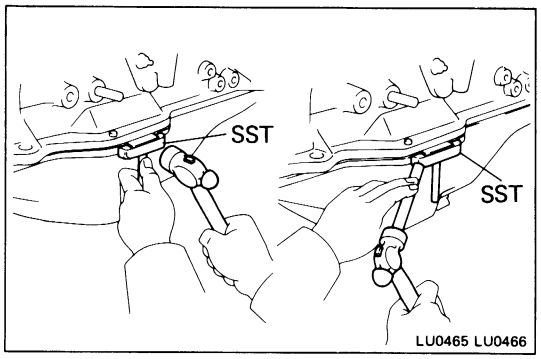

15. REMOVE OIL PAN

(a) Remove the twenty two bolts and four nuts.

(b) Using SST and a brass bar, separate the oil pan from the cylinder block.

SST 09032-001000

HINT: When removing the oil pan, be careful not to damage the oil pan flange.

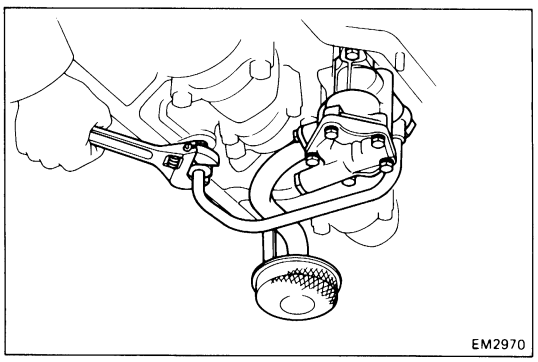

16. REMOVE OIL PUMP

(a) Loosen the union nut.

(b) Remove the bolts and oil pump.

DISASSEMBLY OF OIL PUMP

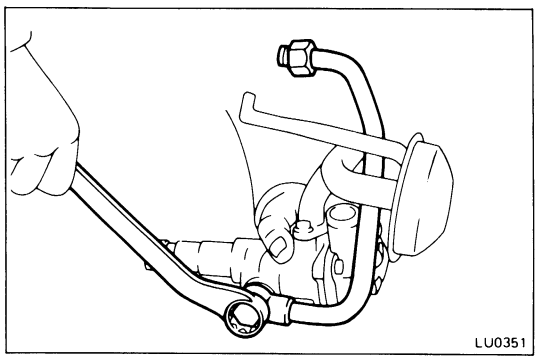

1. REMOVE OIL STRAINER AND OUTLET PIPE

(a) Remove the two bolts, oil strainer and O-ring.

(b) Remove the union bolt, lock washer, oil pump outlet pipe and gasket.

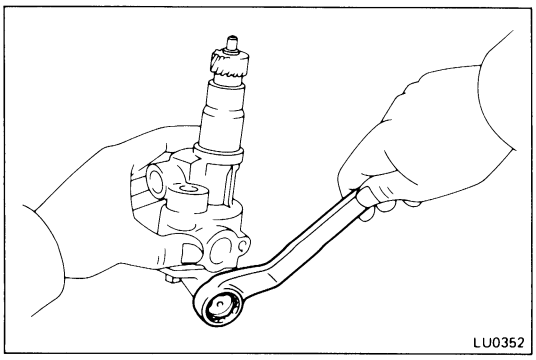

2. DISASSEMBLY OIL PUMP

(a) Unscrew the relief valve plug, spring and relief valve.

(b) Remove the five bolts, oil pump cover and driven gear.

(c) Remove the snap ring, shaft gear, key, spacer and drive shaft.

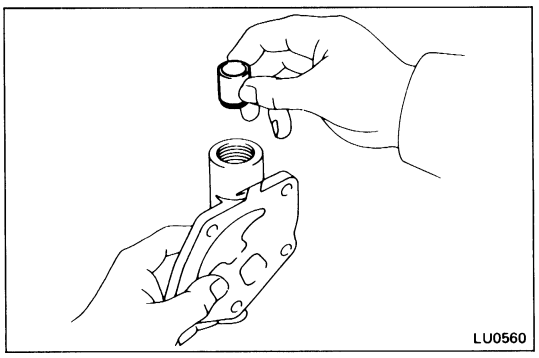

INSPECTION OF OIL PUMP

1. INSPECT RELIEF VALVE

Coat the valve with engine oil and check that it falls smoothly into the valve hole by its own weight.

If it does not, replace the relief valve. If necessary, replace the oil pump assembly.

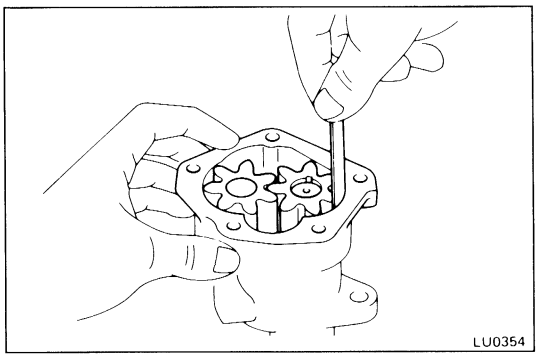

2. INSPECT BODY CLEARANCE

Using a thickness gauge, measure the clearance between the driven gear and body.

Standard clearance: **0.105 — 0.175 mm (0.0041 — 0.0069 in.)**
Maximum clearance: **0.2 mm (0.008 in.)**

If the clearance is greater than maximum, replace the drive gear and/or body.

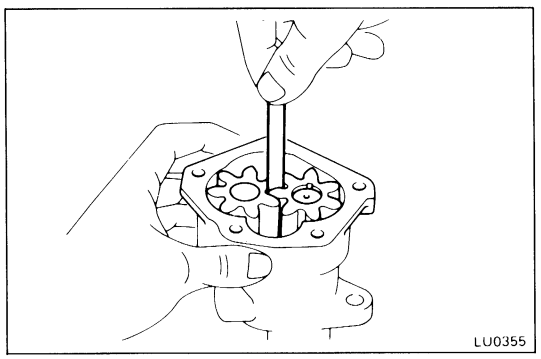

3. INSPECT GEAR BACKLASH

Using a thickness gauge, measure the backlash as shown.

Standard backlash: **0.5 — 0.6 mm (0.020 — 0.024 in.)**
Maximum backlash: **0.9 mm (0.035 in.)**

If the backlash is greater than maximum, replace the drive shaft and/or driven gear.

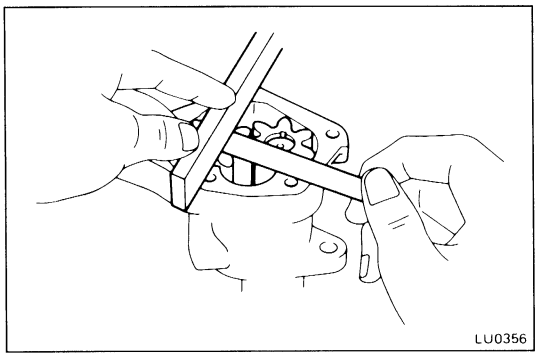

4. INSPECT SIDE CLEARANCE

Using a thickness gauge and flat block, measure the side clearance as shown.

Standard clearance: **0.03 — 0.09 mm (0.0012 — 0.0035 in.)**
Maximum clearance: **0.15 mm (0.0059 in.)**

If the clearance is greater than maximum, replace the drive shaft and driven gear and/or body.

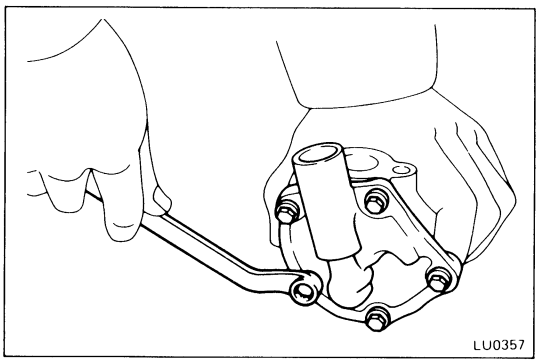

ASSEMBLY OF OIL PUMP

(See page LU-7)

ASSEMBLY OIL PUMP

(a) Install the drive shaft, spacer, key, shaft gear and snap ring.

(b) Install the driven gear and pump cover with the five bolts.

Torque: 75 kg-cm (65 in.-lb, 7.4 N·m)

(c) Install the relief valve and spring in the cover, and screw on the relief valve plug.

Torque: 375 kg-cm (27 ft-lb, 37 N·m)

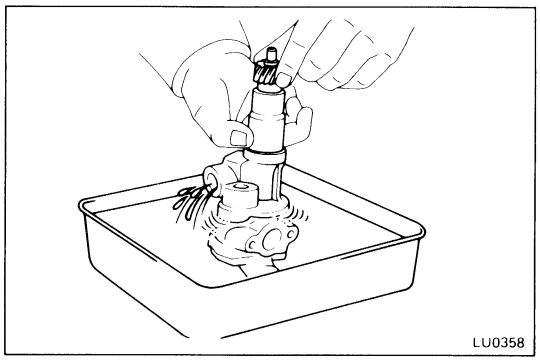

OPERATION CHECK OF OIL PUMP

1. CHECK PUMP OPERATION

(a) Immerse the suction end of the pump into clean engine oil and turn the shaft counterclockwise. Oil should come out of the discharge hole.

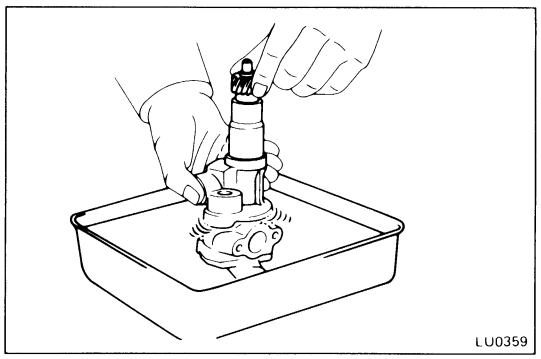

(b) Close the discharge hole with your thumb, and turn the shaft as before. The shaft should be difficult to turn.

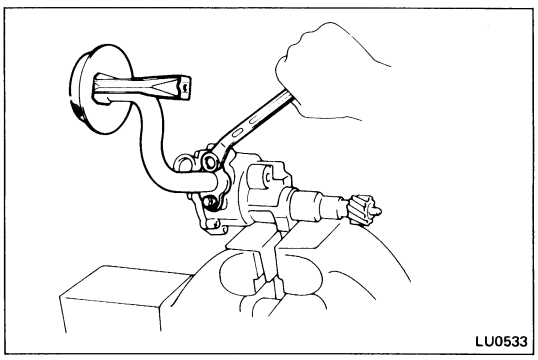

2. INSTALL OIL PUMP STRAINER

(a) Install a new O-ring to oil pump strainer.

(b) Install the oil pump strainer with the two bolts.

Torque: 130 kg-cm (9 ft-lb, 13 N·m)

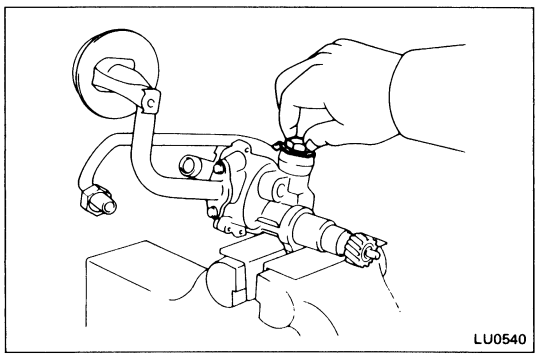

3. INSTALL OIL PUMP OUTLET PIPE

Install the oil pump outlet pipe with a new lock washer, gasket and the union bolt. Finger tighten the union bolt.

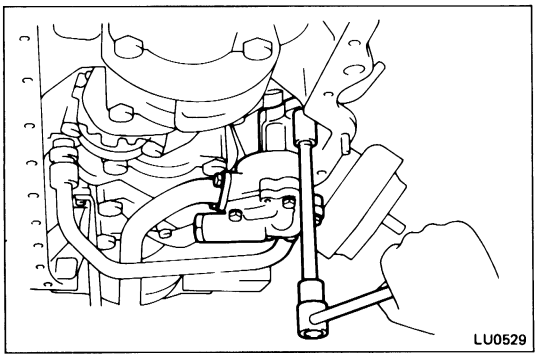

INSTALLATION OF OIL PUMP

(See page LU-7)

1. INSTALL OIL PUMP

(a) Install the oil pump with the bolt. Torque the bolt.

Torque: 220 kg-cm (16 ft-lb, 22 N·m)

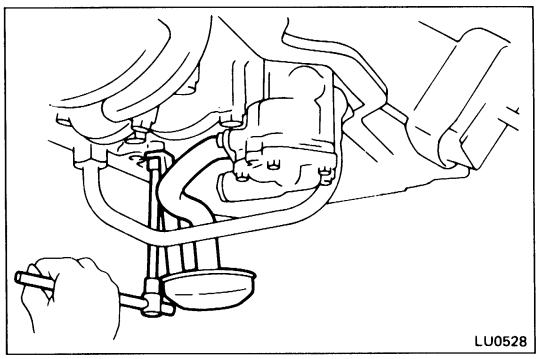

(b) Install the mount bolt holding the oil pump strainer stay to block.

Torque: 60 kg-cm (52 in-lb, 5.9 N·m)

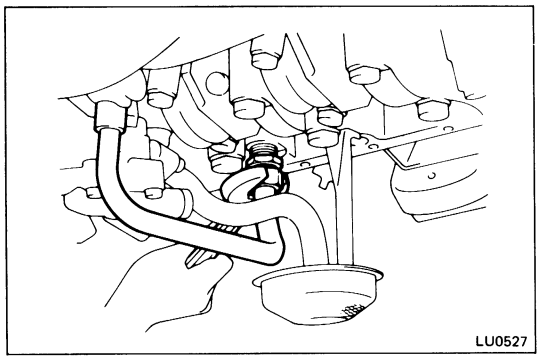

(c) Connect the outlet pipe with the union bolt. Torque the union bolt and nut.

Torque: 350 kg-cm (25 ft-lb, 34 N·m)

(d) Stake the lock washer.

2. INSTALL OIL PAN

(a) Remove any packing material and be careful not to drop the oil on the contacting surfaces of the oil pan and cylinder block.

- Using a razor blade and gasket scraper, remove all the packing (FIPG) material from the gasket surfaces.
- Thoroughly clean all components to remove all the loose material.
- Clean both sealing surfaces with a non-residue solvent.

NOTICE: Do not use a solvent which will affect the painted surfaces.

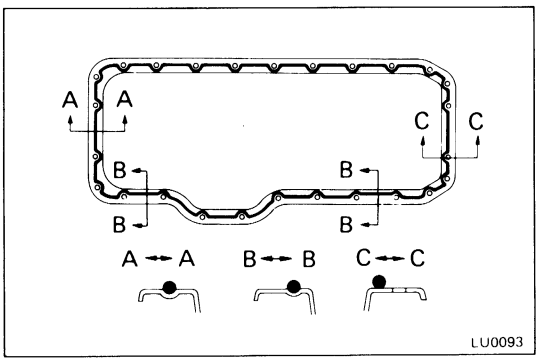

(b) Apply seal packing to the cylinder block installing surface of the oil pan.

Seal packing: Part No. 08826-00080 or equivalent

(c) Install the oil pan over the studs on the block with the twenty four bolts and two nuts.
Torque the bolts and nuts.

Torque: 130 kg-cm (9 ft-lb, 13 N·m)

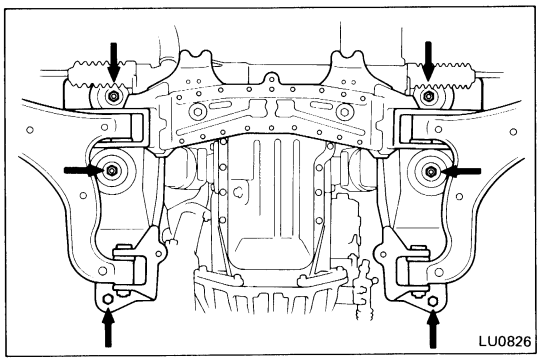

3. INSTALL FRONT SUSPENSION MEMBER

Install the front suspension member to the body.

Torque: 1,300 kg-cm (94 ft-lb, 127 N·m)

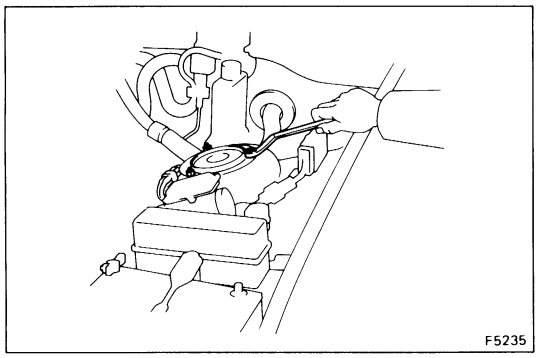

4. INSTALL SHOCK ABSORBERS TO BODY

Install the shock absorber to the body with the three nuts, torque the nuts.

Torque: 360 kg-cm (26 ft-lb, 35 N·m)

5. INSTALL TEMS ACTUATOR

6. INSTALL ENGINE MOUNTING WASHERS AND NUTS

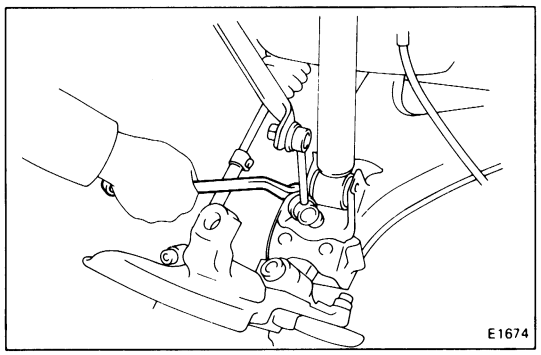

7. CONNECT STABILIZER BAR LINKS TO LOWER ARM

Torque: 650 kg-cm (47 ft-lb, 64 N·m)

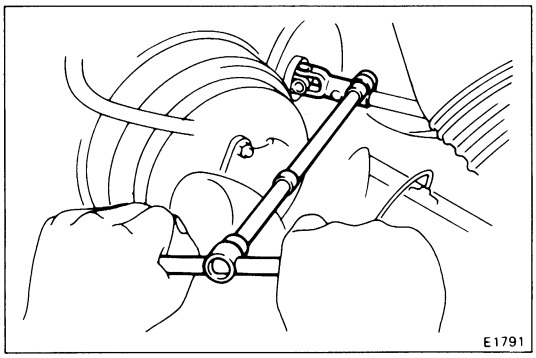

8. CONNECT INTERMEDIATE SHAFT

Connect the intermediate shaft, torque the bolts.

Torque: 330 kg-cm (24 ft-lb, 32 N·m)

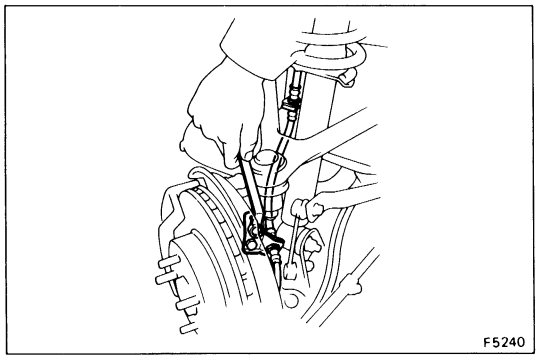

9. INSTALL BRAKE HOSE BRACKETS AND CLIPS

10. (7M-GTE)
CONNECT ENGINE OIL COOLER HOSE TO OIL PAN WITH NEW GASKETS

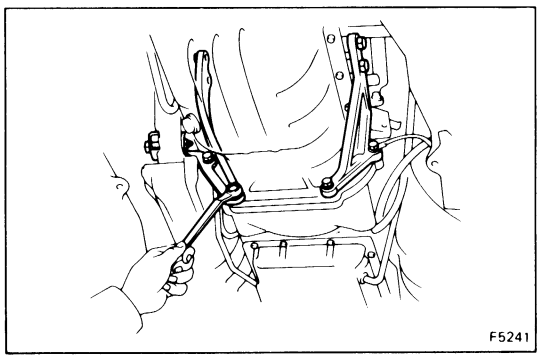

11. INSTALL STIFFENER PLATES AND EXHAUST FRONT PIPE BRACKET

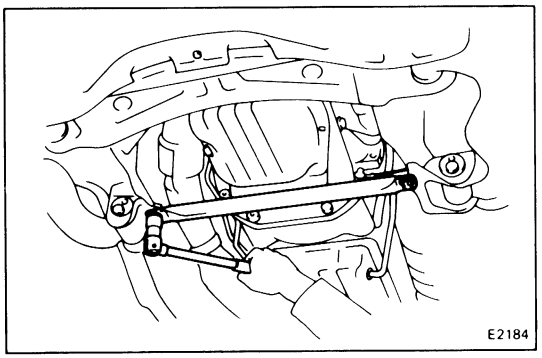

12. INSTALL NO. 1 FRONT SUSPENSION CROSSMEMBER
Torque: 930 kg-cm (67 ft-lb, 91 N·m)

13. (A/T)
INSTALL A/T OIL COOLER HOSE CLAMP

14. FILL WITH ENGINE OIL
(See page LU-5)

15. INSTALL HOOD

16. START ENGINE AND CHECK FOR LEAKS

17. INSTALL ENGINE UNDER COVER

18. INSPECTION OF FRONT WHEEL ALIGNMENT
(See page FA-3)

OIL COOLER AND RELIEF VALVE (7M-GTE)

COMPONENTS

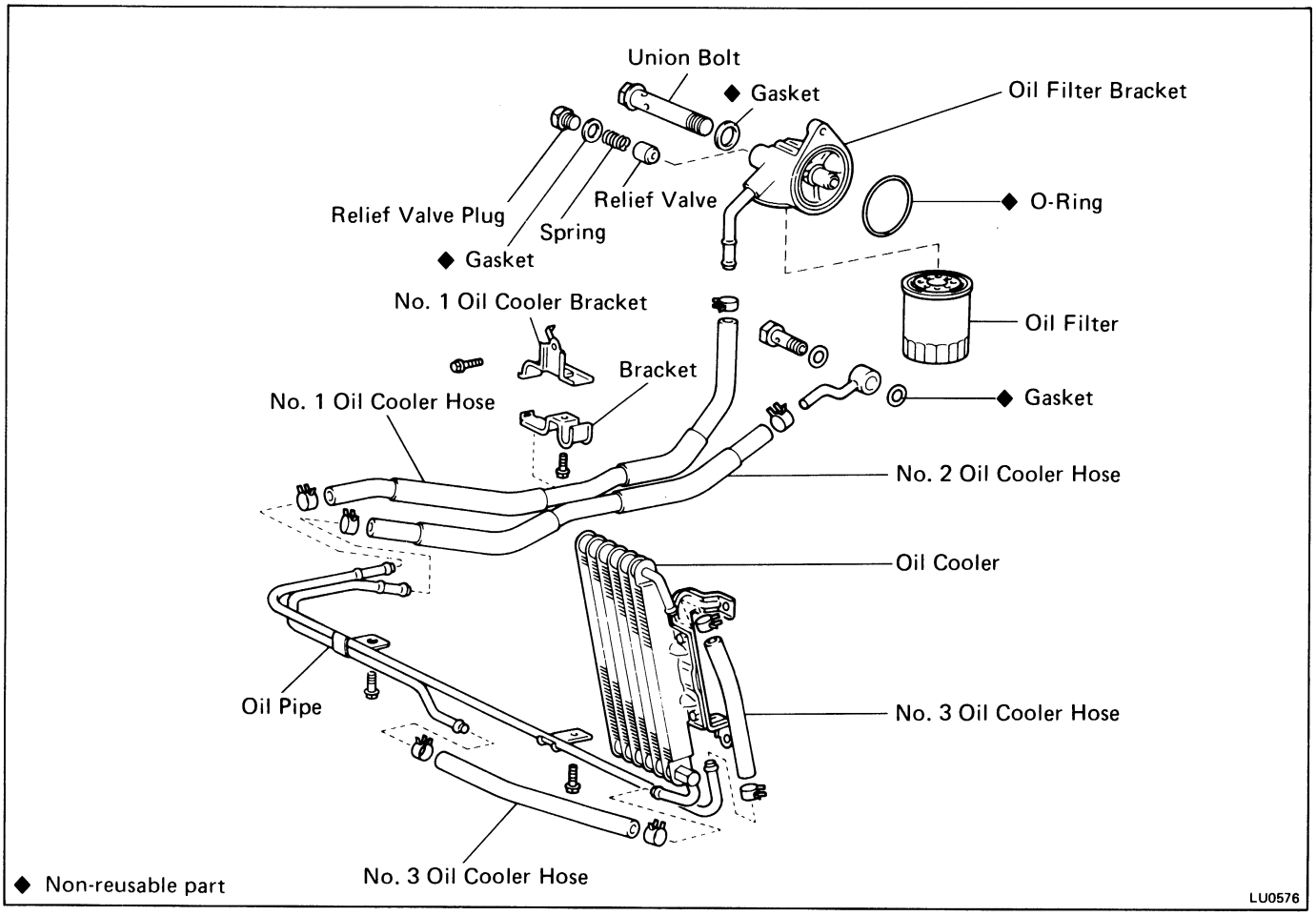

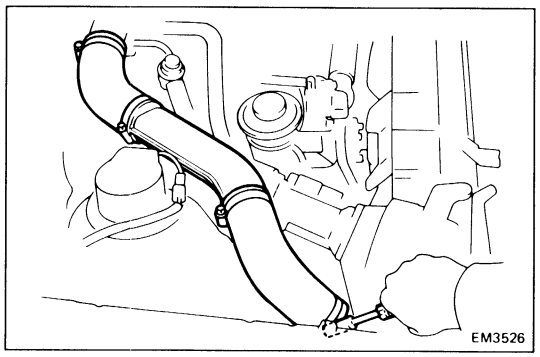

REMOVAL OF OIL FILTER BRACKET

1. **DRAIN ENGINE OIL**

2. **REMOVE NO.4 AIR CLEANER PIPE WITH NO.1 AND NO.2 AIR CLEANER HOSES**

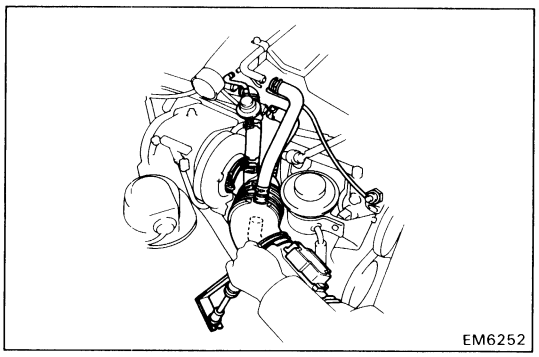

3. **REMOVE NO.7 AIR CLEANER HOSE**
   (a) Disconnect the air hoses from ISC pipe, air intake connector and PVC pipe.
   (b) Disconnect the air flow meter connector.
   (c) Loosen the two clamps and unlock the air cleaner case clip.
   (d) Remove the bolt and No.7 air cleaner hose.
   (e) Disconnect the PS idle up air hose.

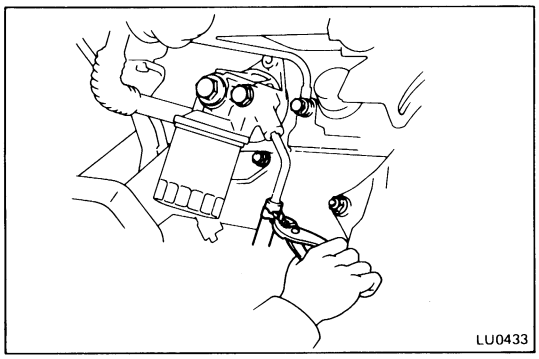

4. REMOVE OIL FILTER BRACKET

(a) Disconnect the oil hose.

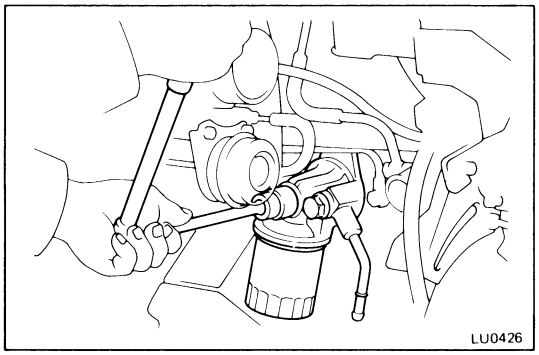

(b) Remove the union bolt, gasket, oil filter bracket and O-ring.

REMOVAL OF RELIEF VALVE

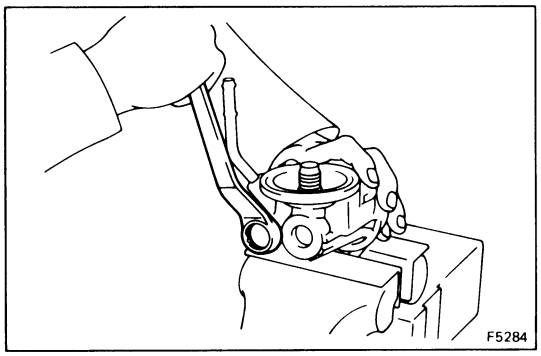

1. REMOVE OIL FILTER
(See page LU-5)

2. REMOVE RELIEF VALVE

(a) Remove the relief valve plug and gasket.

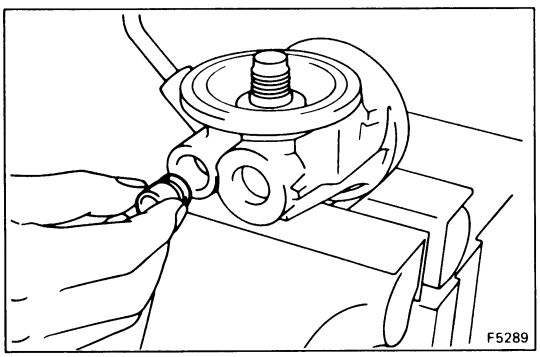

(b) Remove the spring and relief valve.

INSPECTION OF RELIEF VALVE

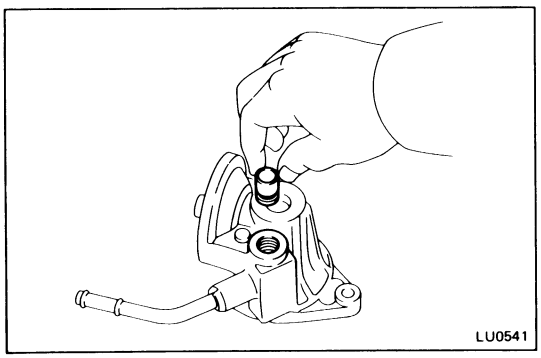

Coat the valve with engine oil and check that it falls smoothly into the valve hole by its own weight.

If it does not, replace the relief valve. If necessary, replace the oil filter bracket assembly.

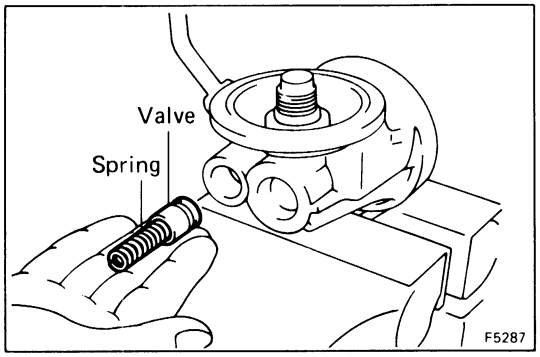

INSTALLATION OF RELIEF VALVE

1. INSTALL RELIEF VALVE

(a) Install the relief valve and spring.

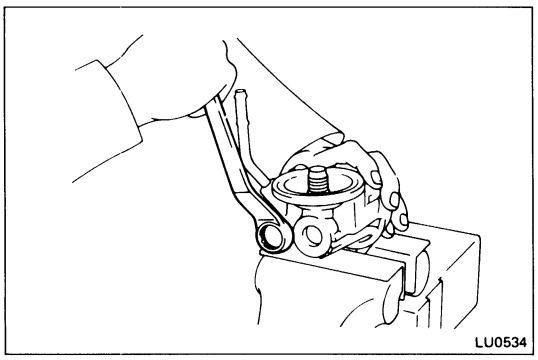

(b) Install a new gasket to the plug.

(c) Install and torque the plug.

Torque: 375 kg-cm (27 ft-lb, 37 N·m)

2. INSTALL OIL FILTER
(See page LU-5)

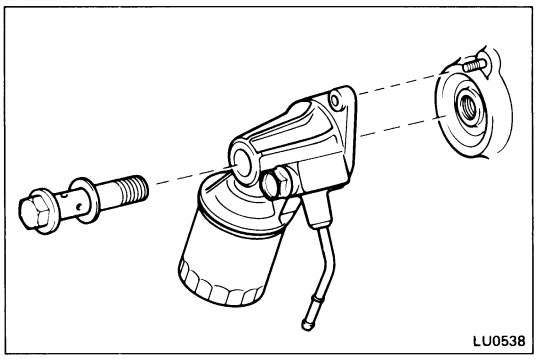

INSTALLATION OF OIL FILTER BRACKET

1. INSTALL OIL FILTER BRACKET

(a) Install a new O-ring to bracket.

(b) Install a new gasket to union bolt.

(c) Put the oil filter bracket hole over the cylinder block stud bolt and install the oil filter bracket with the union bolt.

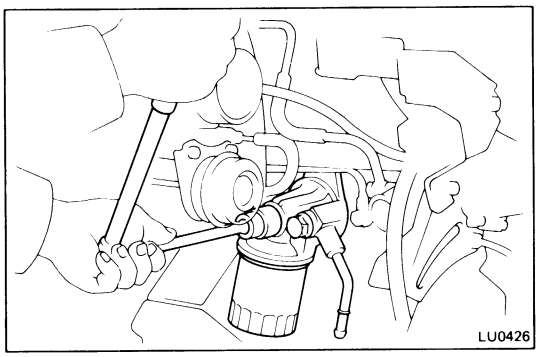

(d) Torque the union bolt.

Torque: 500 kg-cm (36 ft-lb, 49 N·m)

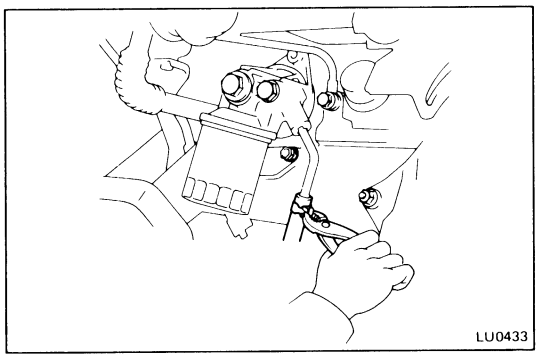

(e) Connect the oil hose.

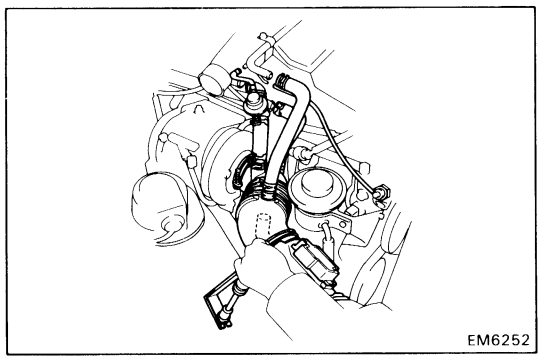

2. INSTALL NO.7 AIR CLEANER HOSE

(a) Connect the PS idle up air hose.

(b) Install the No.7 air cleaner hose and bolt.

(c) Tighten the clamps and lock the air cleaner case clips.

(d) Connect the air flow meter connector.

(e) Connect the air hoses to PCV pipe, air intake connector and ISC pipe.

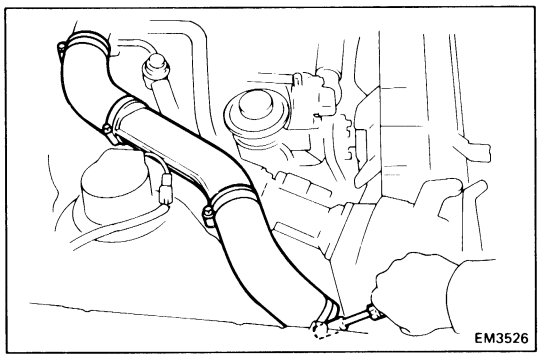

3. INSTALL NO.4 AIR CLEANER PIPE WITH NO.1 AND NO.2 AIR CLEANER HOSES

4. START ENGINE AND CHECK FOR LEAKS

IGNITION SYSTEM

	Page
PRECAUTIONS	IG-2
TROUBLESHOOTING	IG-3
IGNITION SYSTEM CIRCUIT	IG-4
ON-VEHICLE INSPECTION (7M-GE)	IG-5
ON-VEHICLE INSPECTION (7M-GTE)	IG-10
DISTRIBUTOR (7M-GE)	IG-17
CAM POSITION SENSOR (7M-GTE)	IG-21

PRECAUTIONS

1. Do not leave the ignition switch on for more than 10 minutes if the engine does not start.

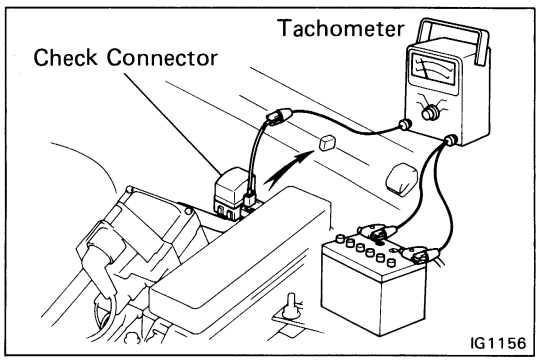

2. When a tachometer is connected to the system, connect the tachometer test probe to the check connector terminal IG ⊖ .
3. As some tachometers are not compatible with this ignition system, we recommended that you confirm the compatibility of your unit before use.
4. NEVER allow the tachometer terminals to touch ground as it could result in damage to the igniter and/or ignition coil.
5. Do not disconnect the battery while the engine is running.
6. Check that the igniter is properly grounded to the body.

TROUBLESHOOTING

Problem	Possible causes	Remedy	Page
Engine will not start/ hard to start (cranks OK)	Incorrect ignition timing	Reset timing	IG-20
	Ignition problems		
	• Ignition coil	Inspect coil	IG-9 or 12
	• (7M-GTE) Igniter	Inspect igniter	IG-15
	• (7M-GE) Distributor	Inspect distributor	IG-9
	(7M-GTE) Cam position sensor	Inspect cam position sensor	IG-16
	• High-tension cords	Inspect high-tension cords	IG-6 or 11
	Ignition wiring disconnected or broken	Inspect wiring	
Rough idle or stalls	Spark plugs faulty	Inspect plugs	IG-7
	Ignition wiring faulty	Inspect wiring	
	Incorrect ignition timing	Reset timing	IG-20
	Ignition problems		
	• Ignition coil	Inspect coil	IG-9 or 12
	• (7M-GTE) Igniter	Inspect igniter	IG-15
	• (7M-GE) Distributor	Inspect distributor	IG-9
	(7M-GTE) Cam position sensor	Inspect cam position sensor	IG-16
	• High-tension cords	Inspect high-tension cords	IG-6 or 11
Engine hesitates/ poor acceleration	Spark plugs faulty	Inspect plugs	IG-7
	Ignition wiring faulty	Inspect wiring	
	Incorrect ignition timing	Reset timing	IG-20
Muffler explosion (after fire) all the time	Incorrect ignition timing	Reset timing	IG-20
Engine backfires	Incorrect ignition timing	Reset timing	IG-20
Poor fuel economy	Spark plugs faulty	Inspect plugs	IG-7
	Incorrect ignition timing	Reset timing	IG-20
Engine overheats	Incorrect ignition timing	Reset timing	IG-20

IGNITION SYSTEM CIRCUIT

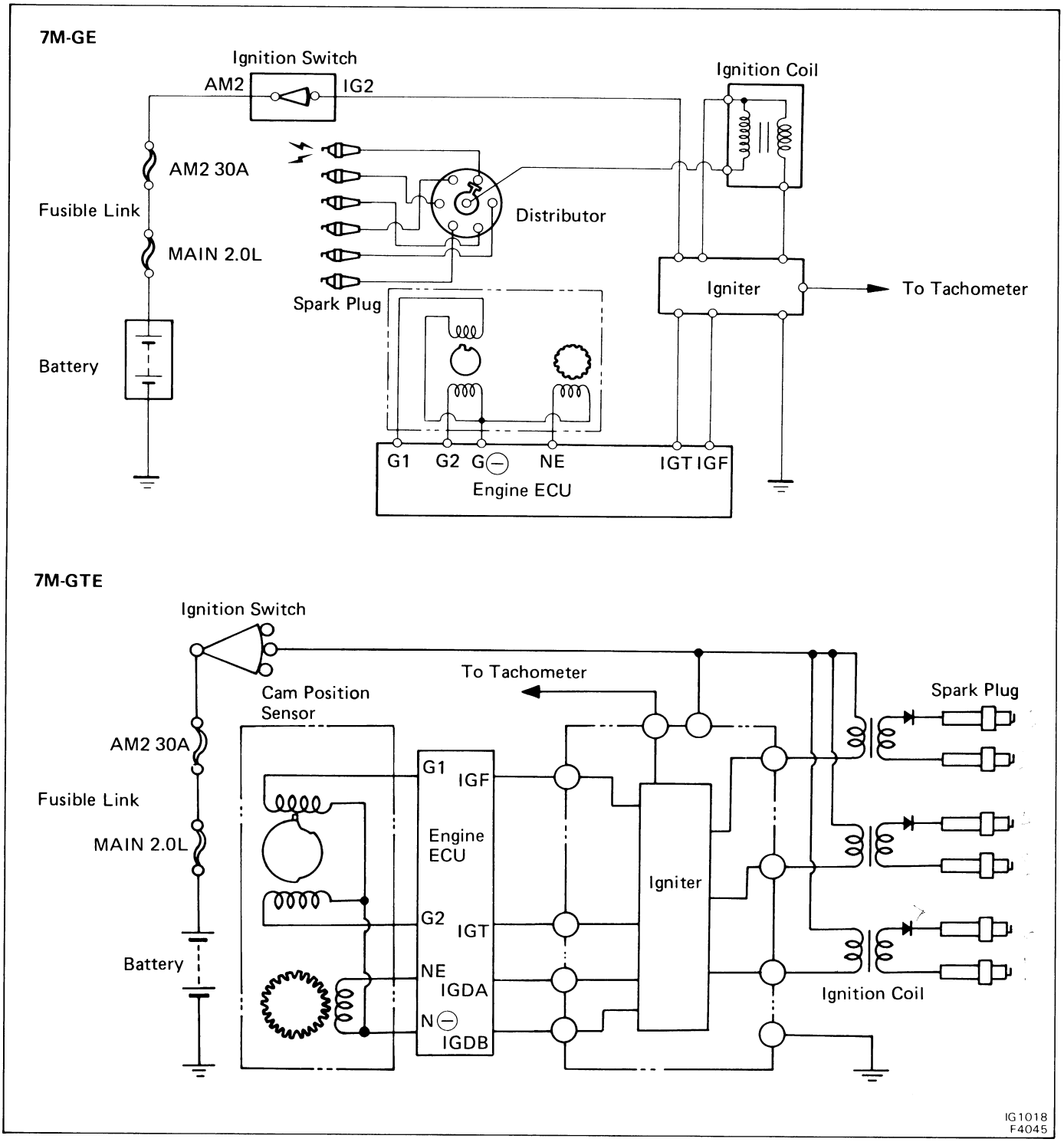

ELECTRONIC SPARK ADVANCE (ESA)

The ECU is programmed with data for optimum ignition timing under any and all operating conditions. Using data provided by sensors which monitor various engine functions (rpm, intake air volume, eng. temperature, etc.) the microcomputer (ECU) triggers the spark at precisely the right instant.

ON-VEHICLE INSPECTION (7M-GE)

SPARK TEST

1-5-3-6-2-4

CHECK THAT SPARK OCCURS

(a) Disconnect high-tension cord from the distributor.

(b) Hold the end approx. 12.5 mm (0.50 in.) from body of vehicle.

(c) See if spark occurs while engine is being cranked.

HINT: To prevent gasoline from being injected from injectors during this test, crank the engine for no more than 1-2 seconds at a time.

If the spark does not occur, perform the test as follows:

SPARK TEST

↓ NO

CHECK CONNECTION OF IGNITION COIL, IGNITER AND DISTRIBUTOR CONNECTORS → BAD → Connect securely.

↓ OK

CHECK RESISTANCE OF HIGH-TENSION CORDS (See page IG-6) → BAD → Replace the cord(s).

↓ OK

CHECK POWER SUPPLY TO IGNITION COIL
1. Ignition switch turn to ON.
2. Check that there is battery voltage at ignition coil positive (+) terminal.

→ BAD → Check wiring between ignition switch to ignition coil.

↓ OK

CHECK RESISTANCE OF IGNITION COIL (See page IG-9)
Resistance (Cold):
Primary 0.24 – 0.30 Ω
Secondary 9.2 – 12.4 kΩ

→ BAD → Replace the ignition coil.

↓ OK

CHECK RESISTANCE OF DISTRIBUTOR PICK UP COIL (See page IG-9) → BAD → Replace the distributor.

↓ OK

CHECK AIR GAP OF DISTRIBUTOR (See page IG-9)
Air gap: 0.2 mm (0.008 in.) or more

→ BAD → Replace the distributor.

↓ OK

CHECK IGT SIGNAL FROM ECU (See page FI-43) → BAD → Check wiring between ECU and distributor, only then try another ECU.

↓ OK

TRY ANOTHER IGNITER

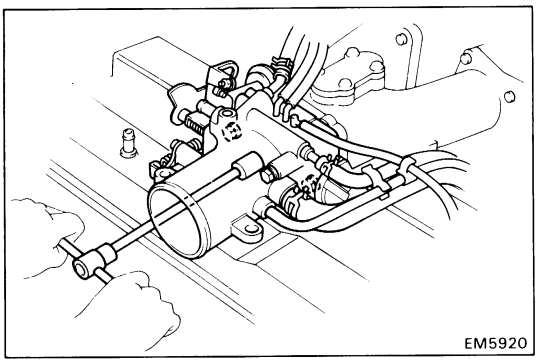

INSPECTION OF HIGH-TENSION CORDS

1. REMOVE HIGH-TENSION CORDS

(a) Disconnect the throttle body.
- Disconnect the air cleaner hose.
- Remove the throttle body bracket(s).
- Disconnect the accelerator connecting rod.
- Disconnect the PCV hose.
- Remove the four bolts and pick up the throttle body.

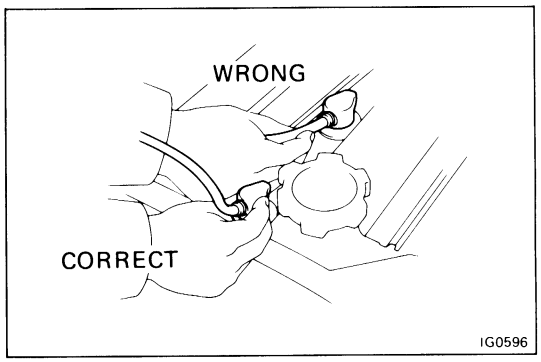

(b) Carefully remove the high-tension cords by their rubber boots from the spark plugs.

NOTICE: Pulling on or bending the cords may damage the conductor inside.

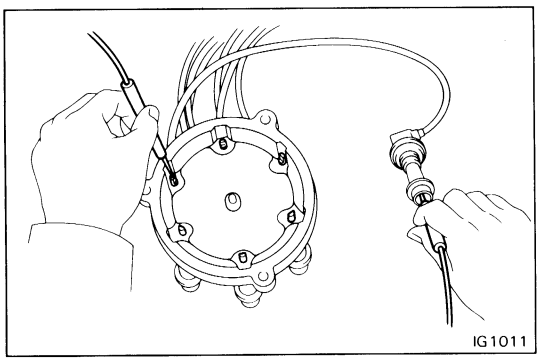

2. INSPECT HIGH-TENSION CORD RESISTANCE

Using an ohmmeter, measure the resistance without disconnecting the cap.

Maximum resistance: 25 kΩ per cord

If resistance exceeds maximum, check the terminals.

If necessary, replace the high-tension cord and/or distributor cap.

3. INSTALL HIGH-TENSION CORDS

(a) Install high-tension cords.

(b) Install the throttle body.
- Install the throttle body with the four bolts.
- Connect the PCV hose.
- Connect the accelerator connecting rod.
- Install the throttle body bracket(s).
- Connect the air cleaner hose.

INSPECTION OF SPARK PLUGS

NOTICE:
- **Never use a wire brush for cleaning.**
- **Never attempt to adjust the gap on a used plug.**
- **Spark plugs should be replaced every 60,000 miles (100,000 km).**

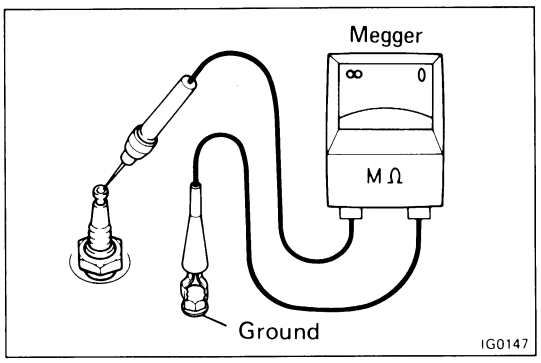

1. INSPECT ELECTRODE

If using a megger (insulation resistance meter):

(a) Remove the high-tension cords. (See page IG-6)

(b) Measure the insulation resistance.

Correct insulation resistance: More than 10 MΩ

If less than 10 MΩ, proceed to step 2.

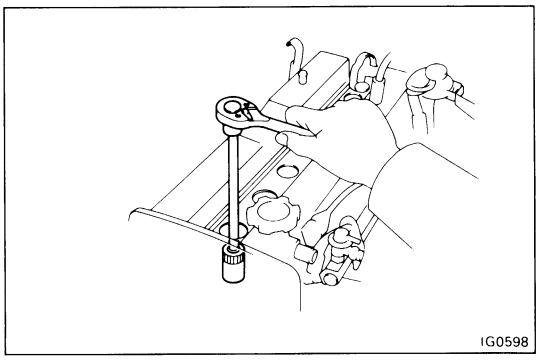

If not using a megger:

(a) Quickly race the engine to 4,000 rpm five times.

(b) Remove the spark plugs. (See procedure below)

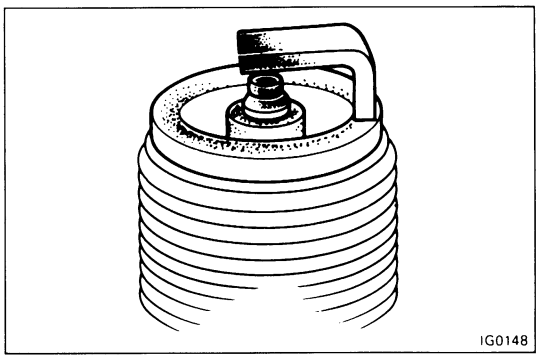

(c) Visually inspect the spark plugs.

If the electrode is dry.....Okay

If the electrode is wet.....Proceed to step 3

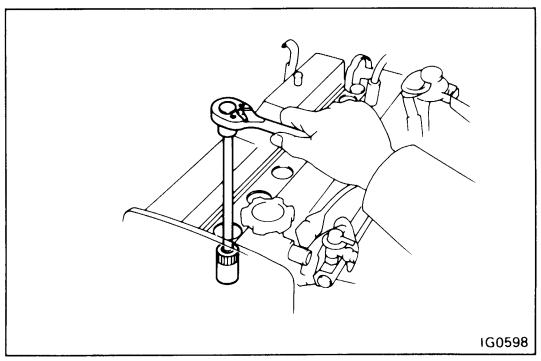

2. REMOVE SPARK PLUGS

(a) Remove the high-tension cords. (See page IG-6)

(b) Using a plug wrench(16 mm), remove the spark plugs.

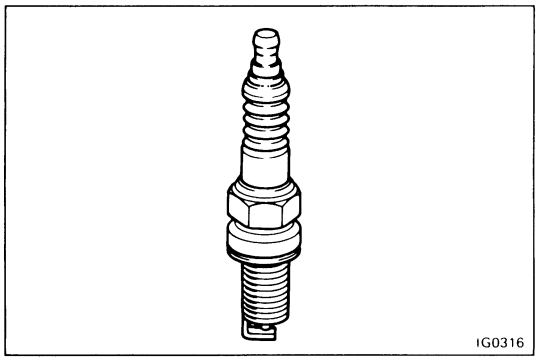

3. VISUALLY INSPECT SPARK PLUGS

Check the spark plug for thread or insulator damage.

If abnormal, replace the plug.

Recommended spark plugs:

7M-GE	**ND**	**PQ16R**
	NGK	**BCPR5EP11**
7M-GTE	**ND**	**PQ20R-P8**
	NGK	**BCPR6EP-N8**

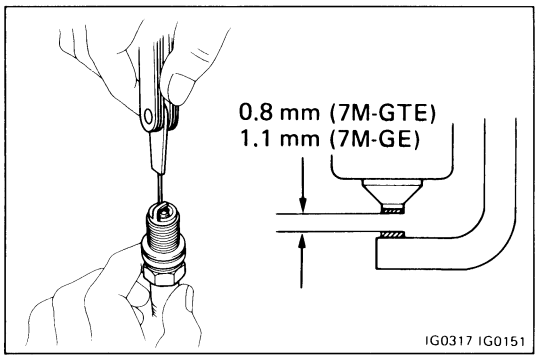

4. INSPECT ELECTRODE GAP

Maximum electrode gap: 7M-GE 1.3 mm (0.051 in.)
7M-GTE 1.0 mm (0.039 in.)

If the gap is greater than maximum, replace the plug.

Correct electrode gap of new plug:
7M-GE 1.1 mm (0.043 in.)
7M-GTE 0.8 mm (0.031 in)

If adjusting the gap of a new plug, bend only the base of the ground electrode, do not touch the tip.

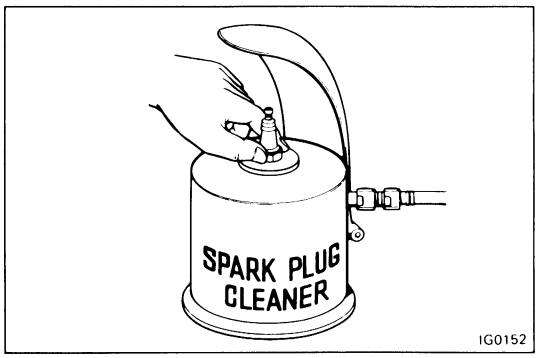

5. CLEAN SPARK PLUGS

If the electrode has traces of wet carbon, allow it to dry and then clean with a spark plug cleaner.

Air pressure: Below 6 kg/cm² (85 psi, 588 kPa)
Duration: 20 seconds or less

HINT: If there are traces of oil, remove it with gasoline before using the spark plug cleaner.

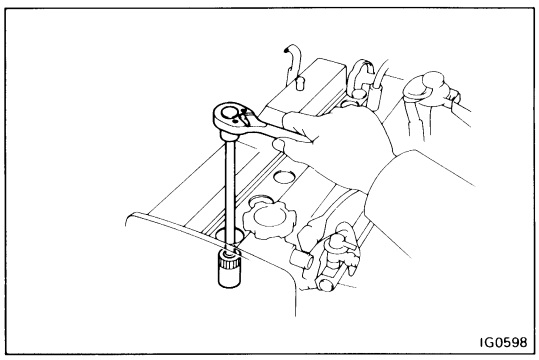

6. INSTALL SPARK PLUGS

(a) Using a plug wrench(16mm), install and torque the spark plugs.

Torque: 180 kg-cm (13 ft-lb, 18 N·m)

(b) Install the high-tension cords.

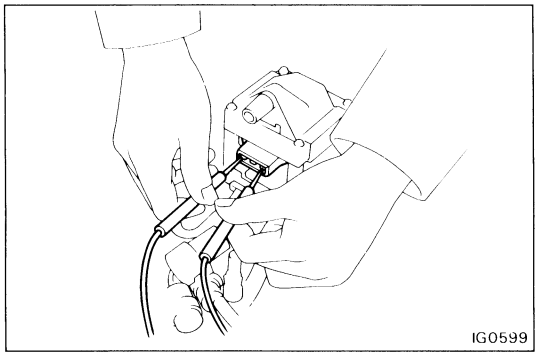

INSPECTION OF IGNITION COIL

1. **DISCONNECT HIGH-TENSION CORD**

2. **INSPECT PRIMARY COIL RESISTANCE**

   Using an ohmmeter, measure the resistance between the positive (+) and negative (−) terminals.

   Primary coil resistance (cold): 0.24 — 0.30 Ω

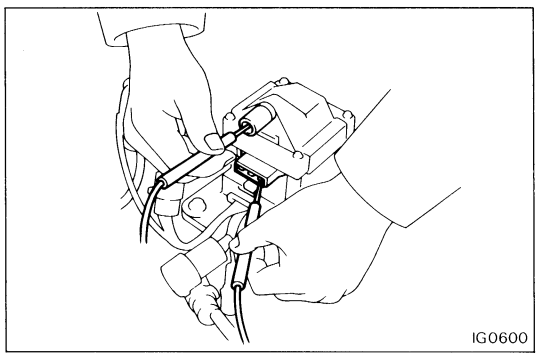

3. **INSPECT SECONDARY COIL RESISTANCE**

   Using an ohmmeter, measure the resistance between the positive (+) terminal and high-tension terminal.

   Secondary coil resistance (cold): 9.2 — 12.4 kΩ

4. **RECONNECT HIGH-TENSION CORD**

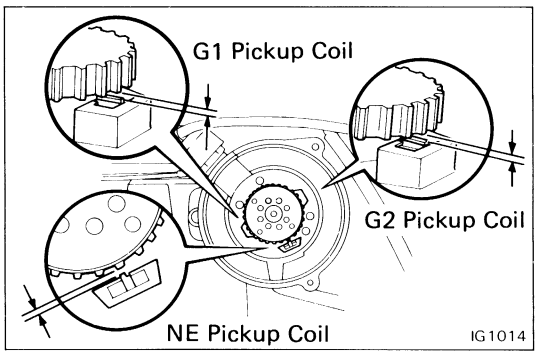

INSPECTION OF DISTRIBUTOR

1. **INSPECT AIR GAPS**

   Using a feeler gauge, measure the gap between the signal rotor and pickup coil projection.

   Air gap: 0.2 mm (0.008 in.) or more

   If the gap is not as specified, replace the distributor.

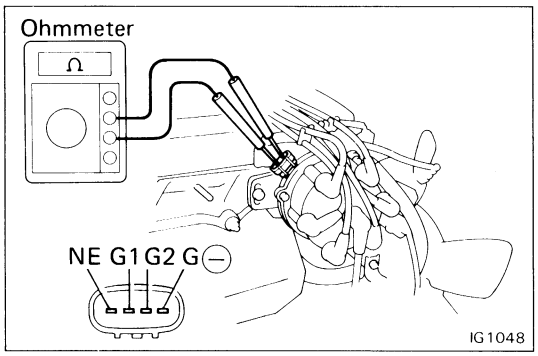

2. **INSPECT PICKUP COILS**

   Using an ohmmeter, check resistance of the pickup coil.

   G1 pickup coil resistance:
   G1 — G⊖ 140 — 180 Ω

   G2 pickup coil resistance:
   G2 — G⊖ 140 — 180 Ω

   NE pickup coil resistance:
   NE — G⊖ 180 — 220 Ω

   If the resistance is not as specified, replace the distributor.

INSPECTION OF IGNITER

(See procedure Spark Test on page IG-5)

ON-VEHICLE INSPECTION (7M-GTE)

SPARK TEST

HINT: Perform this test to check that voltage is coming from the ignition coil to the spark plug.

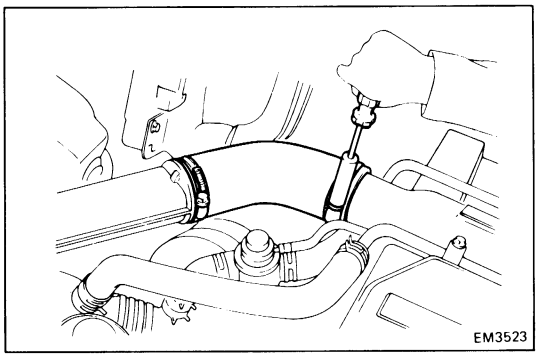

1. **DISCONNECT NO.1 AIR CLEANER HOSE**
2. **DISCONNECT FOLLOWING CABLES:**
   (a) Cruise control cable
   (b) Accelerator cable
   (c) (A/T)
   Throttle cable

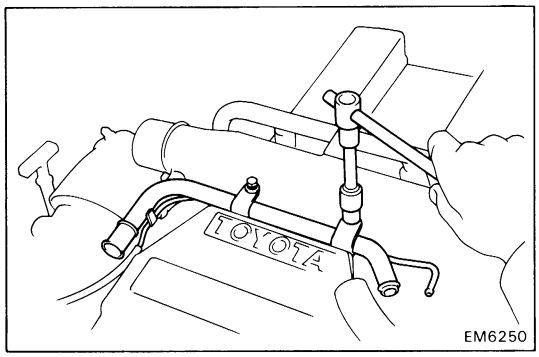

3. **REMOVE ISC PIPE**
   (a) Disconnect the six hoses from the ISC pipe.
   (b) Remove the two bolts and ISC pipe.

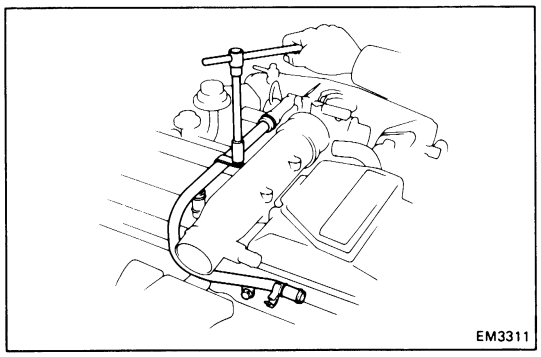

4. **REMOVE PCV PIPE WITH HOSES**
   (a) Remove the oxygen sensor wire from the two clamps.
   (b) Disconnect the No.4 PCV hose from the PCV pipe.
   (c) Remove the two bolts.
   (d) Disconnect the PCV pipe with hoses from the cylinder head covers and throttle body.

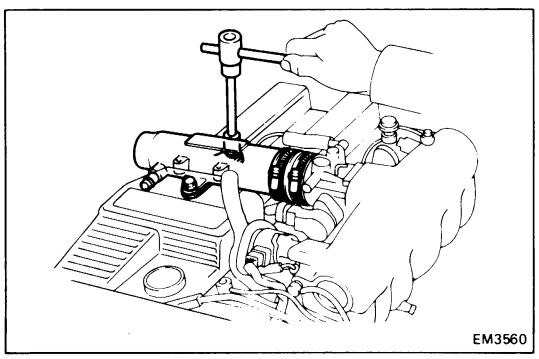

5. **REMOVE INTAKE AIR CONNECTOR**
   (a) Disconnect the air valve hose from the intake air connector.
   (b) Loosen the clamp and remove the two bolts.
   (c) Remove the intake air connector.

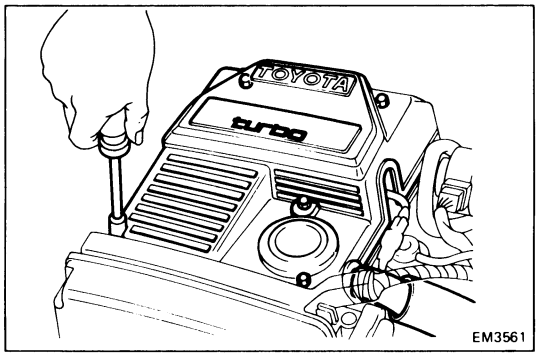

6. REMOVE IGNITION COIL COVER

(a) Remove the oil filler cap.

(b) Remove the five nuts and ignition coil cover.

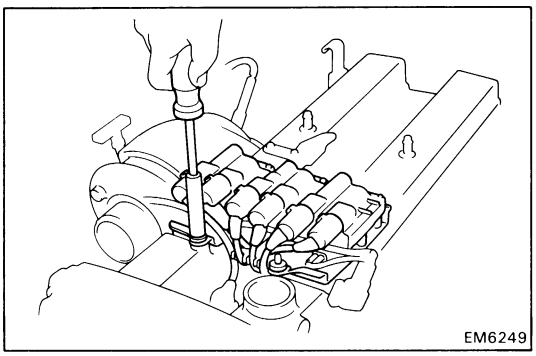

7. REMOVE IGNITION COIL WITH BRACKET

(a) Remove the nut.

(b) Disconnect the No.1 and No.2 high-tension cords from the ignition coil and clamp.

(c) Remove the ignition coil with bracket and high-tension cords.

(d) Remove the No.1 and No.2 high-tension cords from spark plugs.

8. REMOVE SPARK PLUGS

9. PERFORM SPARK TEST

(a) Install the oil filler cap.

(b) Install the spark plugs to each high-tension cord.

(c) Ground the spark plug.

(d) Disconnect the solenoid resistor and cold start injector connector.

(e) See if a spark occurs while engine is being cranked.

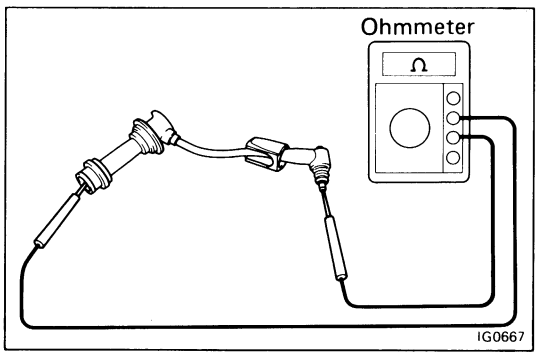

INSPECTION OF HIGH-TENSION CORDS

Using an ohmmeter, measure the resistance.

Maximum resistance: 25 kΩ per cord

If resistance exceeds maximum, check the terminals.

If necessary, replace the high-tension cord.

INSPECTION OF SPARK PLUGS

(See pages IG-7,8)

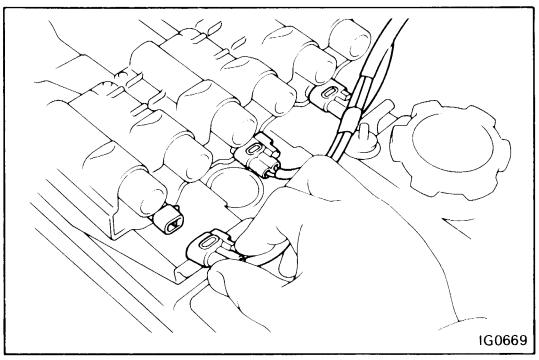

INSPECTION OF IGNITION COIL

1. INSPECT POWER SOURCE LINE

(a) Disconnect the high-tension cord from the ignition coil.

(b) Disconnect the ignition coil connectors.

(c) Turn the ignition switch ON.

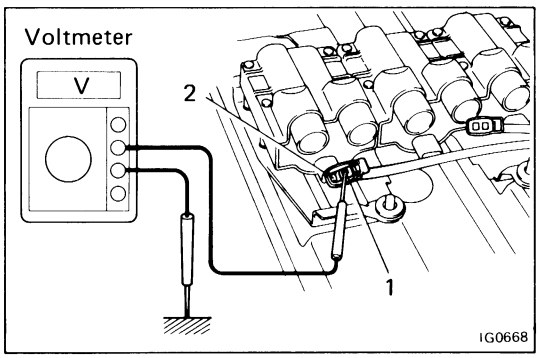

(d) Using a voltmeter, measure the voltage between terminal 1 and body ground.

Voltage: Approx. 12V

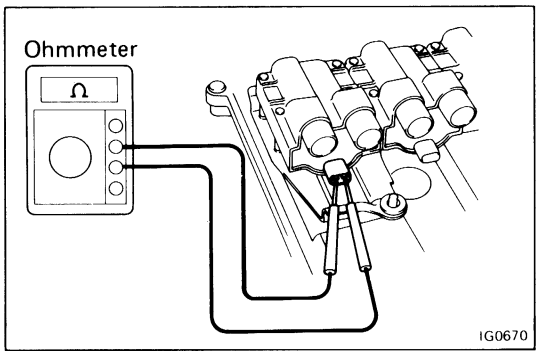

2. INSPECT PRIMARY COIL RESISTANCE

Using an ohmmeter, measure the resistance between the positive (+) and negative (−) terminals.

Primary coil resistance (cold): 0.3 — 0.5 Ω

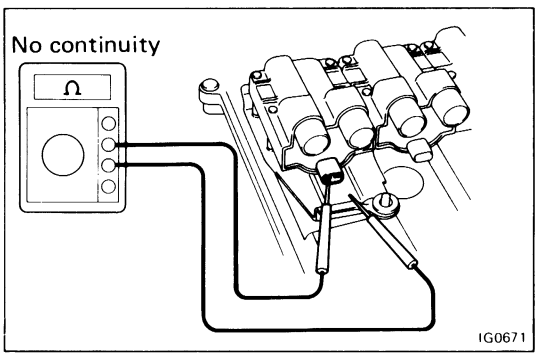

3. INSPECT IGNITION COIL GROUND

Using an ohmmeter, check that there is no continuity between the ignition coil terminal and body ground.

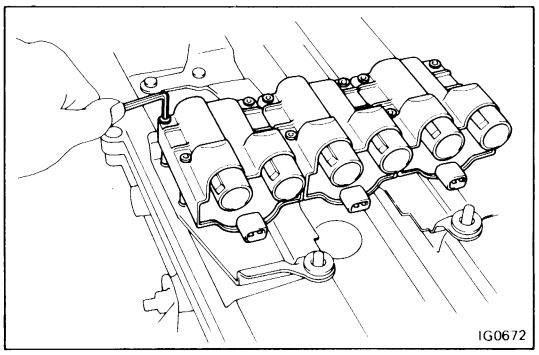

4. IF NECESSARY, REPLACE IGNITION COIL

Using a hexagon wrench 3 mm (0.12 in.), replace the ignition coil.

5. INSTALL IGNITION COIL WITH BRACKET

(a) Connect the ignition coil connector.

(b) Install the high-tension cords as shown in the illustration; No.5 and No.6, No.3 and No.4, and No.1 and No.2.

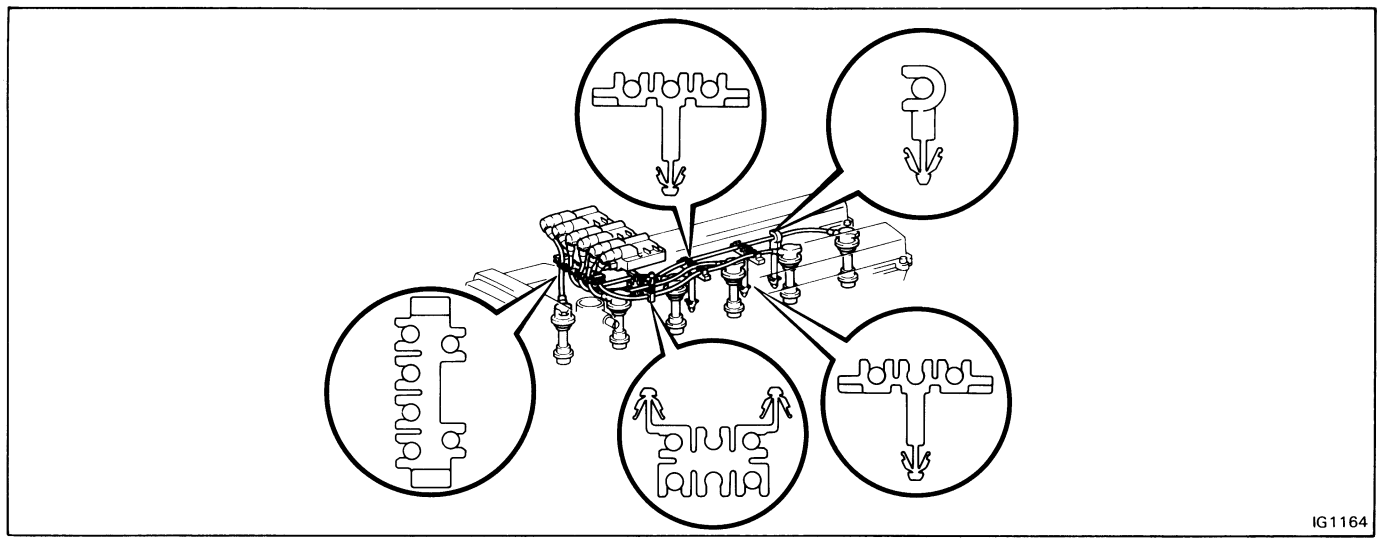

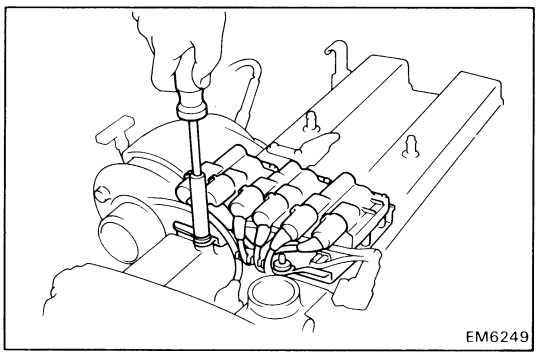

(c) Install and torque the nut.

Torque: 55 kg-cm (48 in.-lb, 5.4 N·m)

HINT: Do not over tighten the nut.

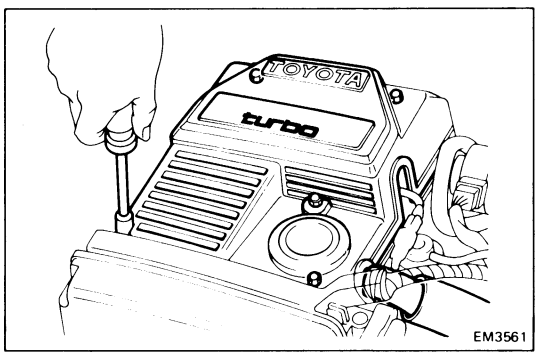

6. INSTALL IGNITION COIL COVER

(a) Remove the oil filler cap.

(b) Install the ignition coil cover with the five nuts.

(c) Install the oil filler cap.

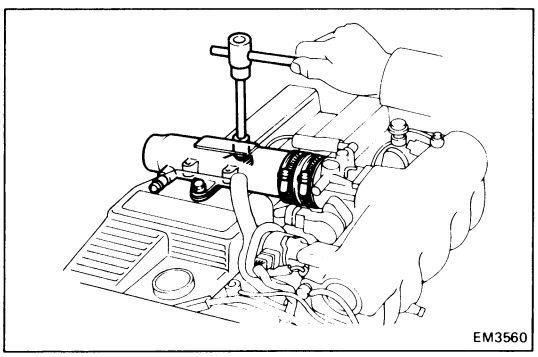

7. INSTALL INTAKE AIR CONNECTOR

(a) Install the intake air connector.

(b) Install and tighten the two bolts.

(c) Tighten the clamp.

(d) Connect the air valve hose.

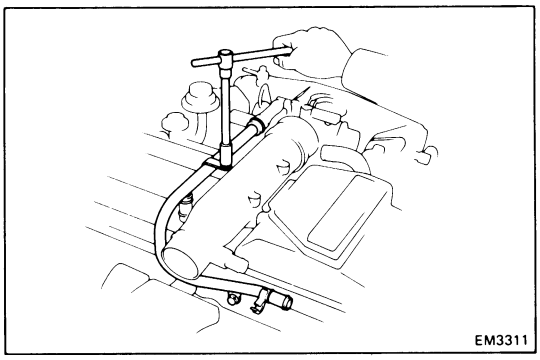

8. INSTALL PCV PIPE WITH HOSES

(a) Install the PCV pipe with hoses to throttle body and cylinder head covers.

(b) Install and tighten the two bolts.

(c) Connect the No.4 PCV hose.

(d) Install the oxygen sensor wire to the two PCV pipe clamps.

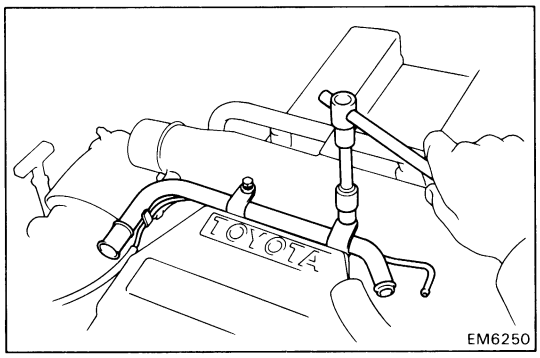

9. INSTALL ISC PIPE

(a) Install the ISC pipe with the two bolts.

(b) Connect the six hoses to ISC pipe.

10. CONNECT FOLLOWING CABLES:

(a) (A/T)
Throttle cable

(b) Accelerator cable

(c) Cruise control cable

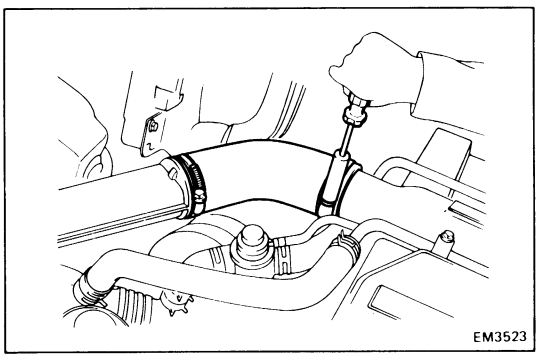

11. CONNECT NO.1 AIR CLEANER HOSE

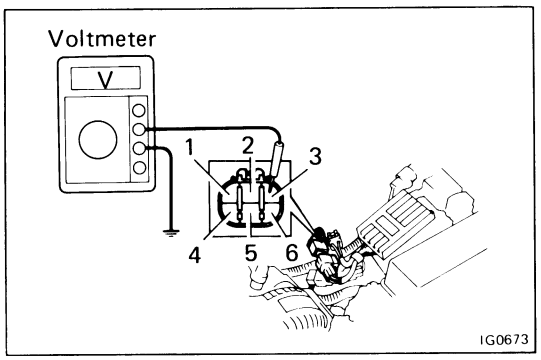

INSPECTION OF IGNITER

1. CHECK POWER SOURCE LINE VOLTAGE

(a) Disconnect the connector 6-P.

(b) Turn the ignition switch ON.

(c) Using a voltmeter, connect the positive (+) probe to terminal 3 of the harness side and negative (−) probe to body ground.

Voltage: Approx. 12 V

(d) Connect the connector 6-P.

2. CHECK POWER TRANSISTOR IN IGNITER

(a) Disconnect the connector 4-P.

(b) Disconnect each ignition coil from its connector.

(c) Turn the ignition switch ON.

(d) Using an ohmmeter, connect terminal 2 of ignition coil C and body ground.

(e) Using a 3V dry cell battery, apply voltage to terminal 2 of connector 4-P.

As voltage is applied, check that there is momentary continuity.

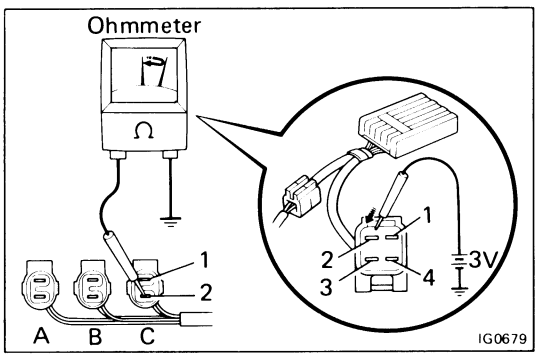

(f) Using an ohmmeter, connect terminal 2 of ignition coil A and body ground.

(g) Using a 3V dry cell battery, apply voltage to terminal 4 of the 4-P connector.

(h) With terminal 4 connected apply voltage to terminal 2 of connector 4-P. As you apply voltage, check that there is momentary continuity.

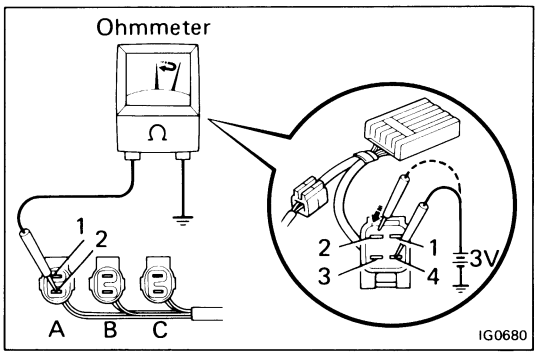

(i) Using an ohmmeter, connect terminal 2 of ignition coil B and body ground.

(j) Using a 3V dry cell battery, apply voltage to terminal 3 of the 4-P connector.

(k) With terminal 3 connected apply voltage to terminal 2 of connector 4-P. As you apply voltage, check that there is momentary continuity.

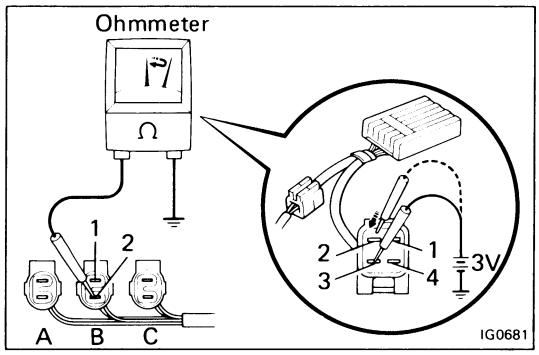

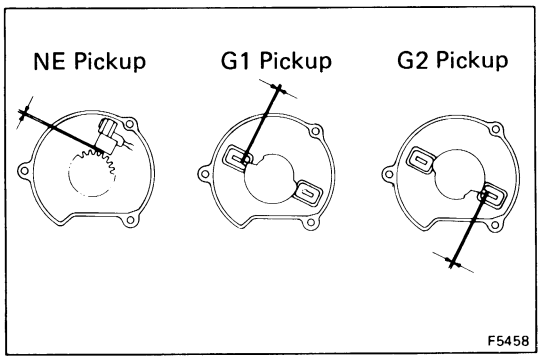

INSPECTION OF CAM POSITION SENSOR

1. INSPECT AIR GAPS

Using a feeler gauge, measure the gap between the signal rotor and pickup coil projection.

Air gap: 0.2 — 0.4 mm (0.008 — 0.016 in.)

If the gap is not within specification, replace the cam position sensor.

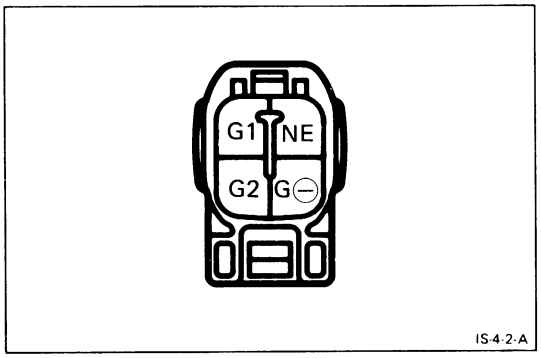

2. INSPECT PICKUP COILS

Using an ohmmeter, check resistance of the pickup coil.

G1 pickup coil resistance:
G1 — G⊖ 140 — 180 Ω

G2 pickup coil resistance:
G2 — G⊖ 140 — 180 Ω

NE pickup coil resistance:
NE — G⊖ 140 — 180 Ω

If the resistance is not within specification, replace the cam position sensor.

DISTRIBUTOR (7M-GE)

COMPONENTS

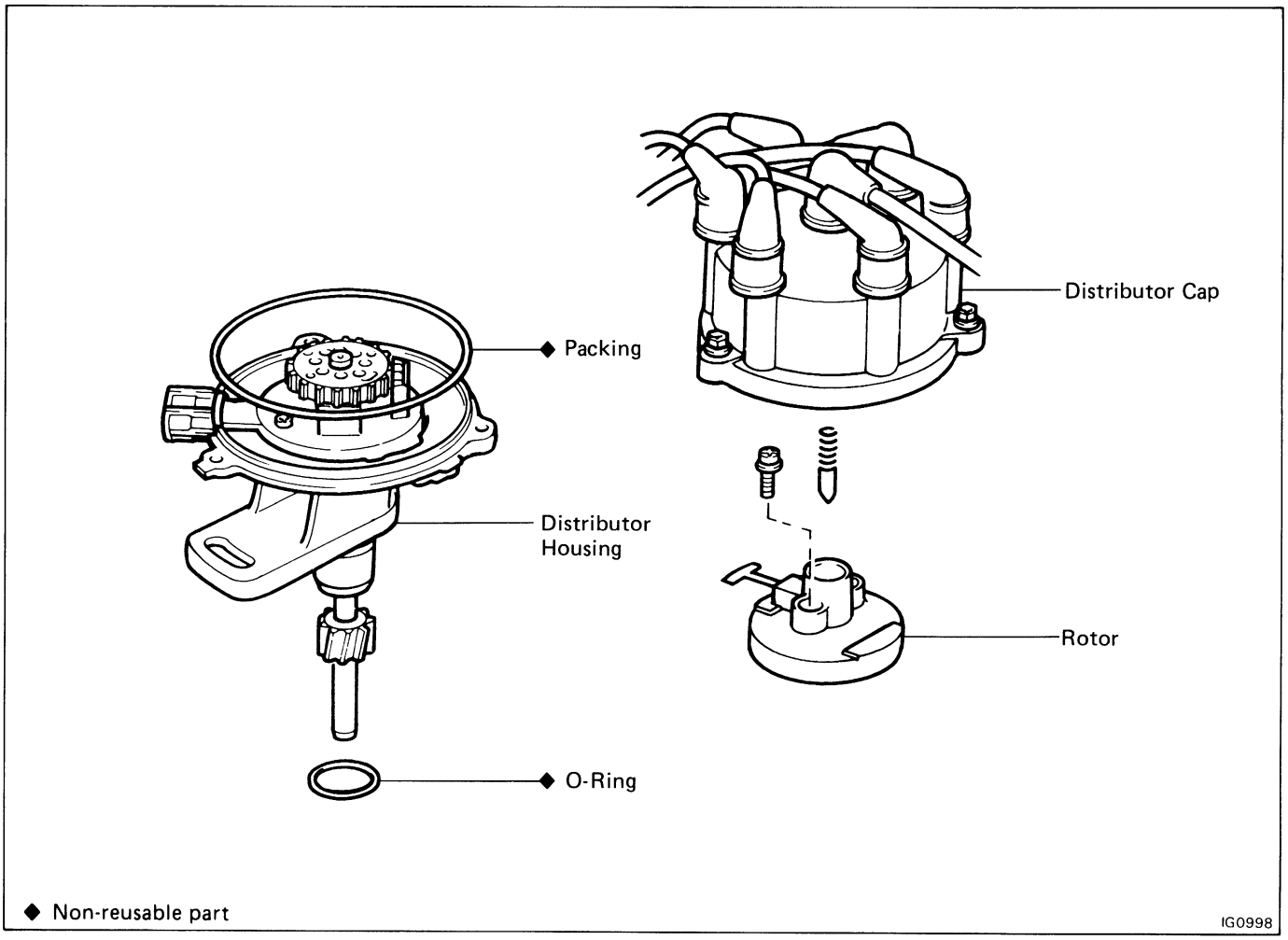

REMOVAL OF DISTRIBUTOR

1. **DISCONNECT HIGH-TENSION CORDS FROM DISTRIBUTOR CAP**

2. **DISCONNECT DISTRIBUTOR CONNECTOR**

3. **REMOVE DISTRIBUTOR CAP AND PACKING**

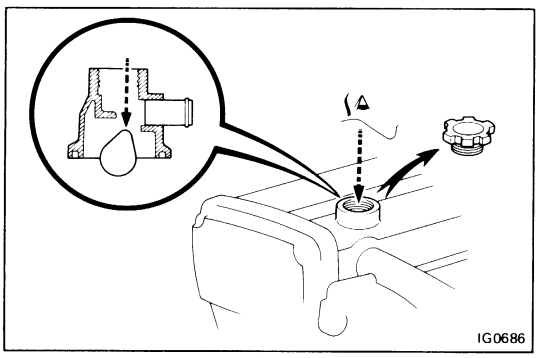

4. **SET NO.1 CYLINDER TO TDC/COMPRESSION**
   (a) Remove the oil filler cap.
   (b) Look through oil filler hole and turn the crankshaft clockwise until the cam nose can be seen.

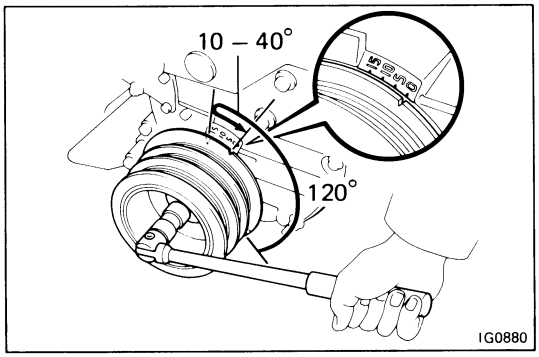

(c) Turn the crankshaft counterclockwise approximately 120°.

(d) Turn the crankshaft again approximately 10° to 40° clockwise so that the timing belt cover TDC mark and the crankshaft pulley TDC mark are aligned.

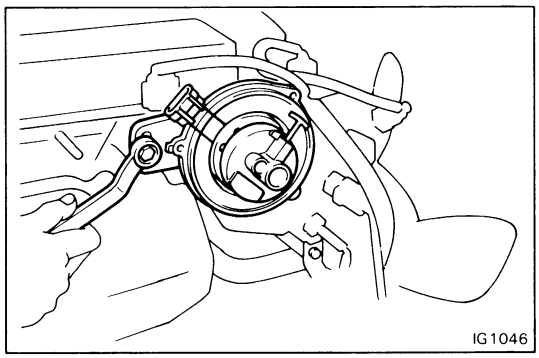

5. REMOVE DISTRIBUTOR

(a) Remove the hold-down bolt.

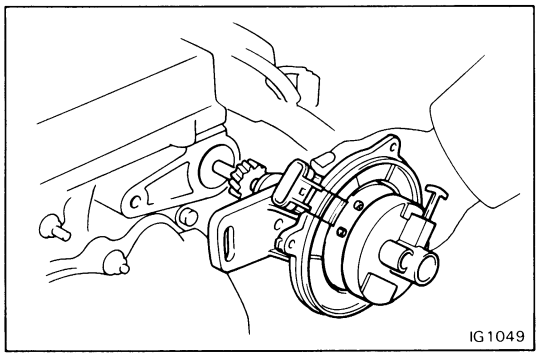

(b) Pull out the distributor from the cylinder head.

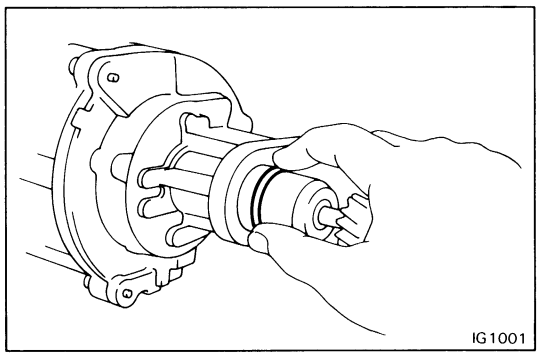

6. REMOVE O-RING

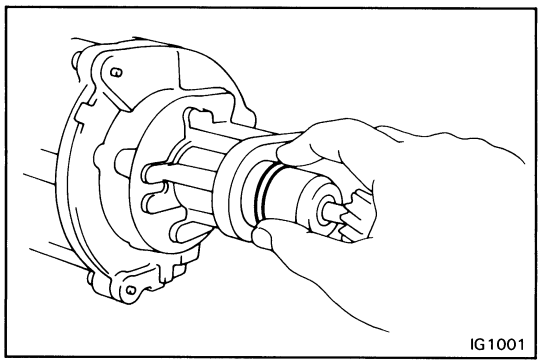

INSTALLATION OF DISTRIBUTOR

1. CHECK NO.1 CYLINDER TO TDC/COMPRESSION (See page IG-17)

2. INSTALL DISTRIBUTOR

(a) Install a new O-ring to the distributor.

HINT: Always use a new O-ring when installing the distributor.

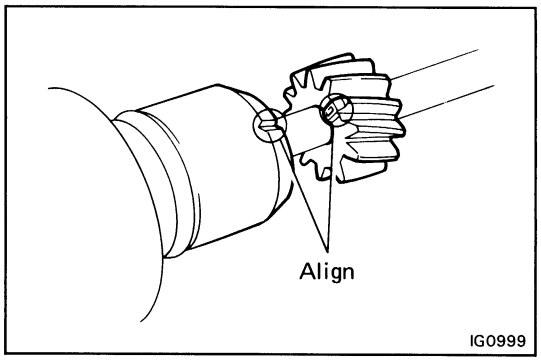

(b) Align the groove of the distributor housing with the protrusion on the driven gear.

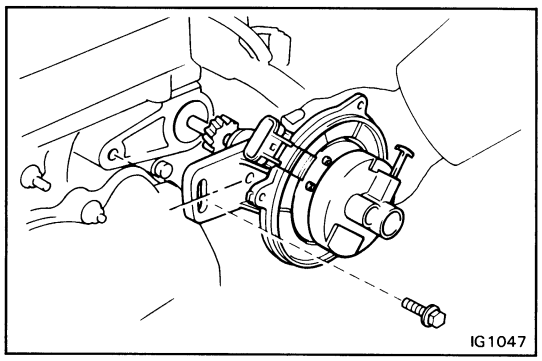

(c) Insert the distributor, aligning the center of the flange with that of the bolt hole on the cylinder head.

(d) Lightly tighten the hold-down bolt.

3. INSTALL DISTRIBUTOR CAP

4. CONNECT DISTRIBUTOR CONNECTOR

5. CONNECT HIGH-TENSION CORDS TO DISTRIBUTOR CAP

6. WARM UP ENGINE

Allow the engine to normal operating temperature.

7. CONNECT TACHOMETER TO ENGINE

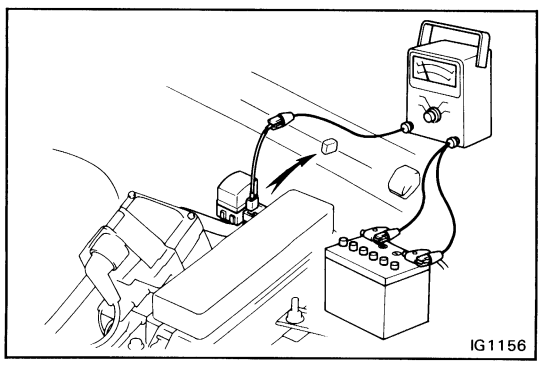

Connect the tachometer test probe to the check connector terminal IG ⊖.

NOTICE:

- **NEVER allow the tachometer terminals to touch ground as it could result in damage to the igniter and/or ignition coil.**
- **As some tachometers are not compatible with this ignition system, we recommend that you confirm the compatibility of your unit before use.**

HINT (7M-GTE): Connect the timing light pickup to the No.6 cylinder high-tension cord.

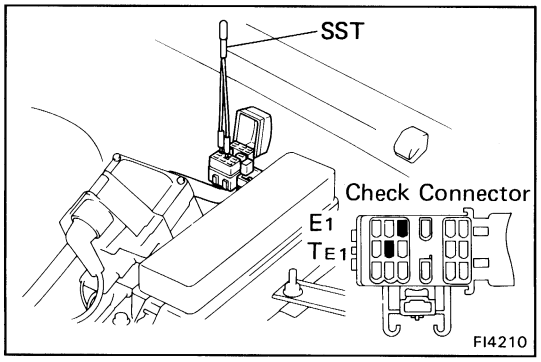

8. ADJUST IGNITION TIMING

(a) Using SST, connect terminals T_{E1} and E_1 of the check connector.

SST 09843-18020

(b) Check the idle speed.

Idle speed: 7M-GE 700 rpm
7M-GTE 650 rpm

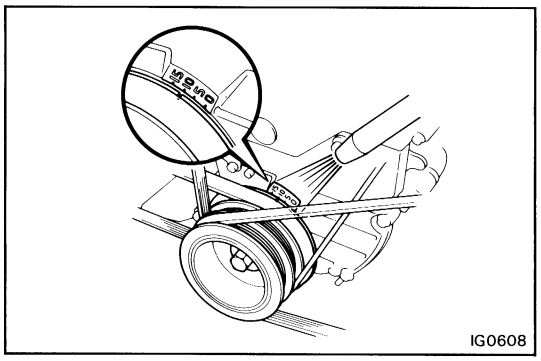

(c) Using a timing light, slowly turn the distributor (7M-GE) or cam position sensor (7M-GTE) until the timing mark on the crankshaft pulley is aligned with the 10° mark. Tighten the distributor bolt and recheck the ignition timing.

Ignition timing: 10° BTDC @ idle
[w/ Terminals T_{E1} and E_1 connected and Transmission in "N" range]

Torque: 140 kg-cm (10 ft-lb, 14 N·m)

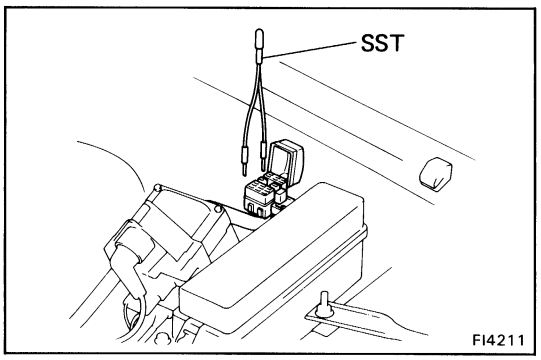

(d) Remove SST.

SST 09843-18020

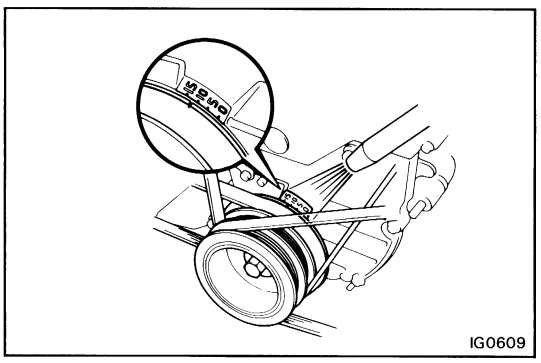

9. FURTHER CHECK IGNITION TIMING

Check the ignition timing advance.

Ignition timing:
7M-GE 9 — 10° BTDC @ idle
7M-GTE More than 12° BTDC @ idle

10. DISCONNECT TACHOMETER AND TIMING LIGHT FROM ENGINE

CAM POSITION SENSOR (7M-GTE)

COMPONENTS

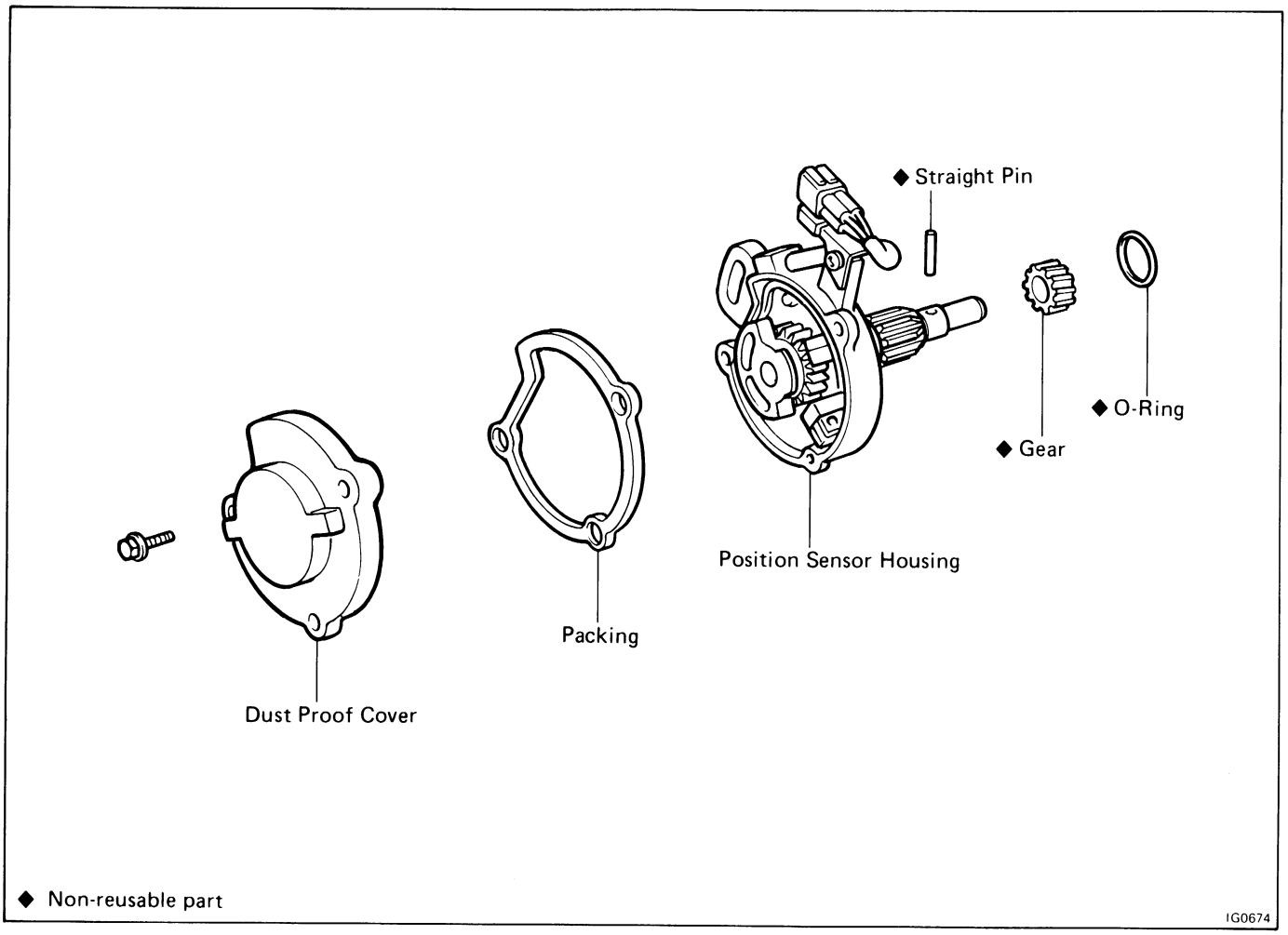

REMOVAL OF CAM POSITION SENSOR

1. **DISCONNECT CABLE FROM NEGATIVE TERMINAL OF BATTERY**

2. **DISCONNECT CAM POSITION SENSOR CONNECTOR**

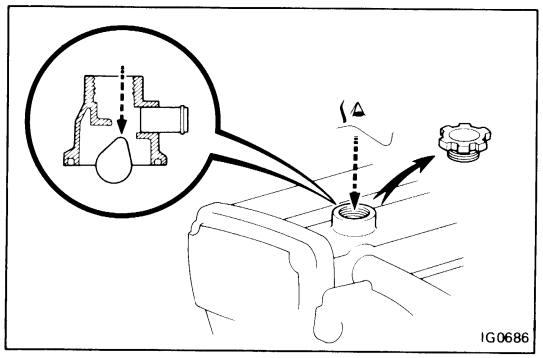

3. **SET NO.1 CYLINDER TO TDC/COMPRESSION**
   (a) Remove the oil filler cap.
   (b) Look through oil filler hole and turn the crankshaft clockwise until the cam nose can be seen.

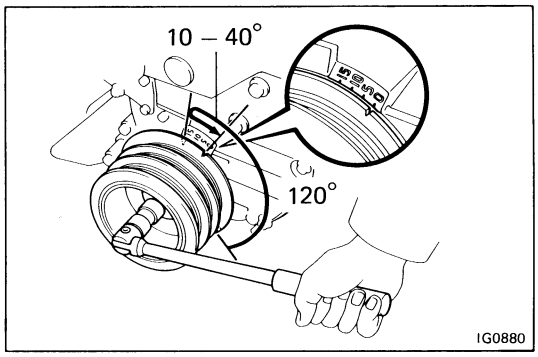

(c) Turn the crankshaft counterclockwise approximately 120°.

(d) Turn the crankshaft again approximately 10° to 40° clockwise so that the timing belt cover TDC mark and the crankshaft pulley TDC mark are aligned.

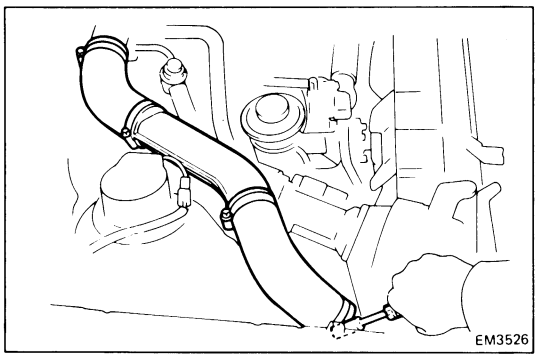

4. REMOVE NO.4 AIR CLEANER PIPE WITH NO.1 AND NO.2 AIR CLEANER HOSES

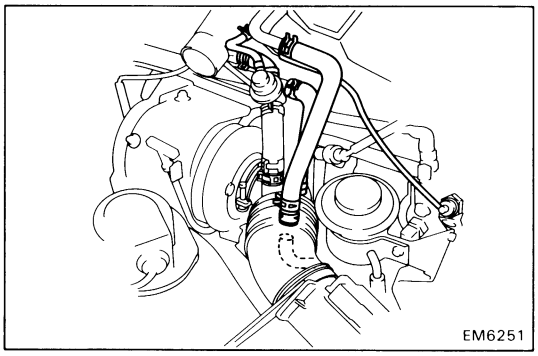

5. REMOVE NO.7 AIR CLEANER HOSE WITH AIR FLOW METER AND AIR CLEANER CAP

(a) Disconnect the three air hoses and PCV hose.

(b) Disconnect the air flow meter connector.

(c) Disconnect the PS idle up air hose.

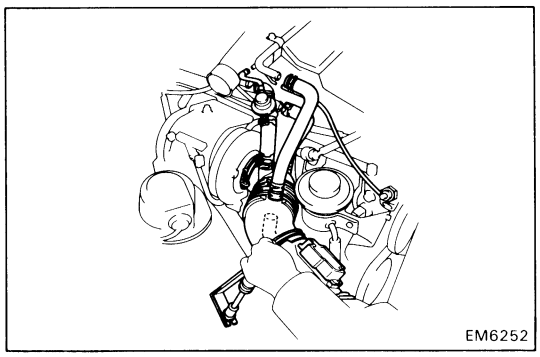

(d) Loosen the clamps and remove the bolt.

(e) Remove the No.7 air cleaner hose with the air flow meter and air cleaner cap.

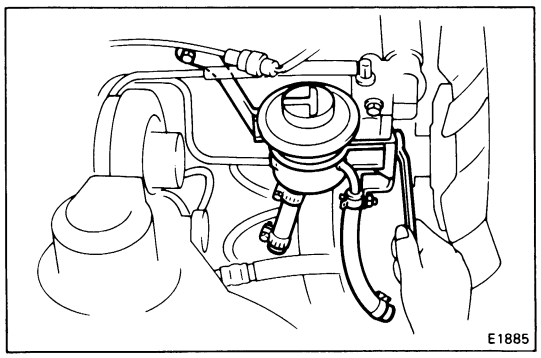

6. REMOVE PS RESERVOIR TANK

Remove the two bolts, nut and reservoir tank with bracket.

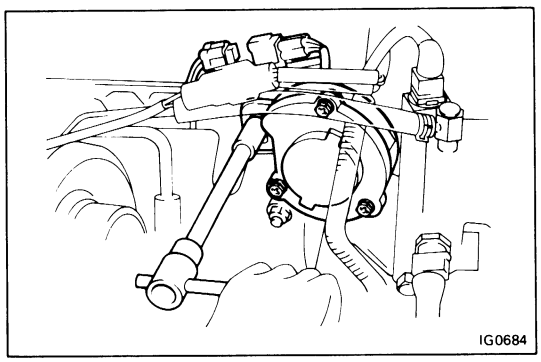

7. REMOVE CAM POSITION SENSOR

(a) Remove the hold-down bolt.

(b) Pull out the cam position sensor from the cylinder head.

8. REMOVE O-RING

REPLACEMENT OF CAM POSITION SENSOR DRIVEN GEAR

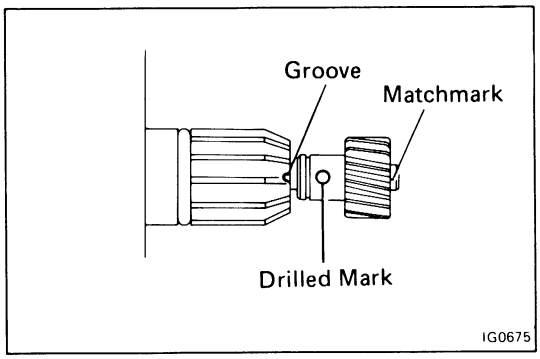

1. GRIND DRIVEN GEAR AND PIN

(a) Align the drilled mark on the driven gear with the groove of the housing.

(b) Place a matchmark on the cam position sensor shaft that aligns with the groove of the housing.

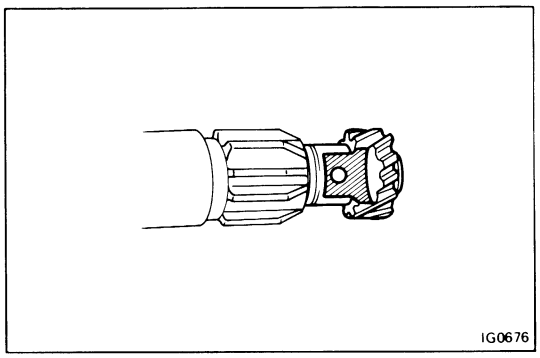

(c) Using a grinding wheel, grind the gear and pin.

NOTICE: Be careful not to damage the shaft.

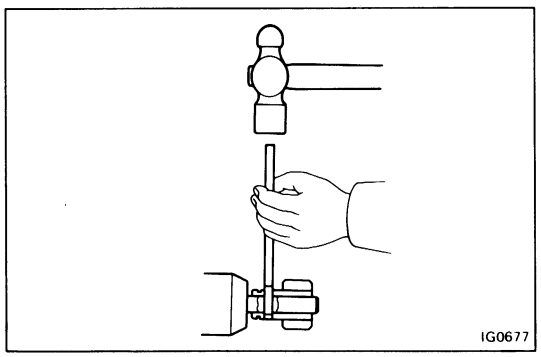

2. REMOVE PIN AND DRIVEN GEAR

(a) Using a punch and hammer, drive out the pin.

(b) Remove the driven gear and discard it.

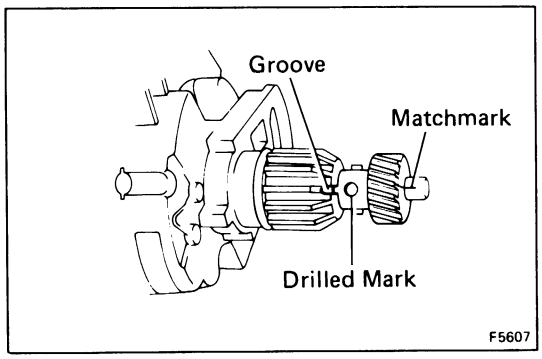

3. INSTALL NEW DRIVEN GEAR AND PIN

(a) Align the matchmark with the groove of the housing.

(b) Align the drilled mark on the new driven gear with the groove of the housing.

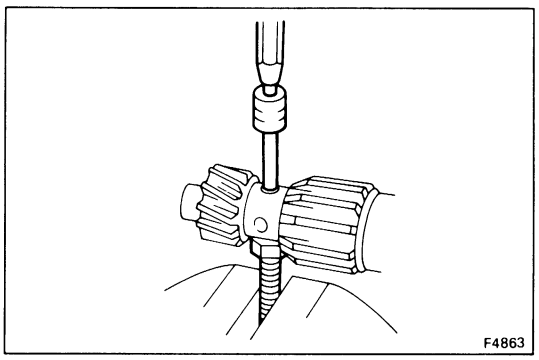

(c) Using a punch and hammer, peen both ends of the pin.

INSTALLATION OF CAM POSITION SENSOR

1. CHECK NO.1 CYLINDER TO TDC/COMPRESSION (See page IG-21)

2. INSTALL CAM POSITION SENSOR

(a) Install a new O-ring to the cam position sensor.

NOTE: Always use a new O-ring when installing the cam position sensor.

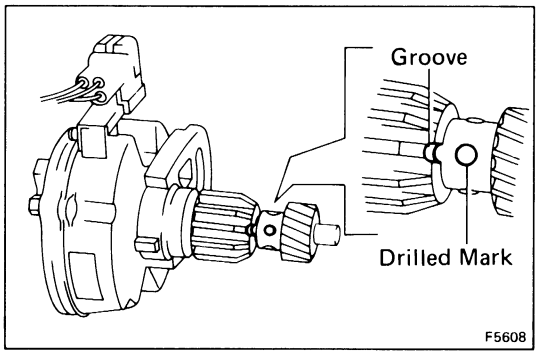

(b) Align the drilled mark on the driven gear with the groove of the housing.

(c) Insert the cam position sensor, aligning the center of the flange with that of the bolt hole on the cylinder head.

(d) Lightly tighten the hold-down bolt.

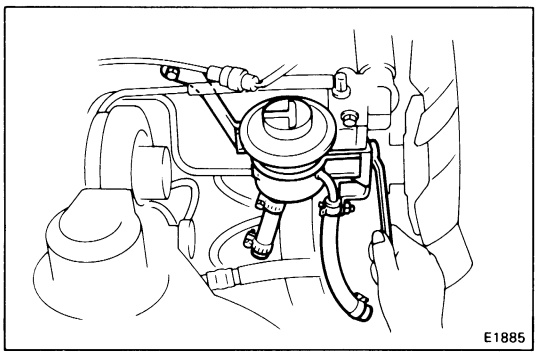

3. INSTALL PS RESERVOIR TANK

Install the PS reservoir tank with bracket with the two bolts and nut.

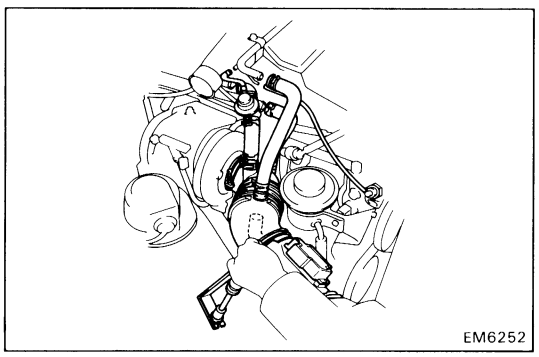

4. INSTALL NO.7 AIR CLEANER HOSE WITH AIR FLOW METER AND AIR CLEANER CAP

(a) Install the No.7 air cleaner hose with the air flow meter and air cleaner cap.

(b) Install the bolt and tighten the clamps.

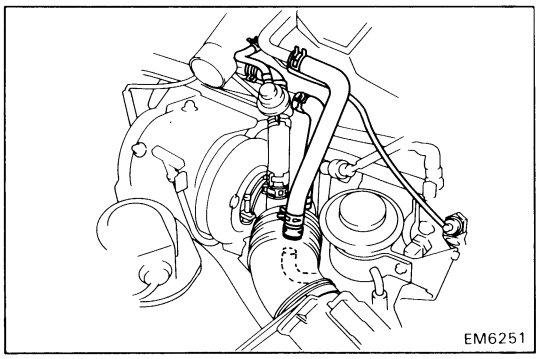

(c) Connect the PS idle up air hose.

(d) Connect the air flow meter connector.

(e) Connect the PCV hose and three air hoses.

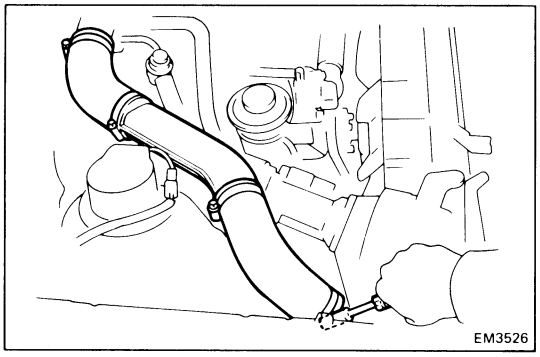

5. INSTALL NO.4 AIR CLEANER PIPE WITH NO.1 AND NO.2 AIR CLEANER HOSES

6. CONNECT CAM POSITION SENSOR CONNECTOR

7. WARM UP ENGINE

Allow the engine to normal operating temperature.

8. ADJUST IGNITION TIMING
(See steps 7 to 10 on pages IG-19, 20)

STARTING SYSTEM

	Page
TROUBLESHOOTING	ST-2
STARTER	ST-3
STARTER RELAY	ST-12
CLUTCH START SWITCH	ST-12

TROUBLESHOOTING

Problem	Possible cause	Remedy	Page
Engine will not crank	Battery charge low	Check battery specific gravity	CH-2
		Charge or replace battery	
	Battery cables loose, corroded or worn	Repair or replace cables	
	Starter relay faulty (ex. Canada A/T)	Replace starter relay	
	Clutch start switch faulty (M/T only)	Adjust switch position or replace switch	CL-4
	Neutral start switch faulty (A/T only)	Adjust or repair switch	
	Fusible link blown	Replace fusible link	
	Starter faulty	Repair starter	ST-3
	Ignition switch faulty	Replace ignition switch	
Engine cranks slowly	Battery charge low	Check battery specific gravity	CH-2
		Charge or replace battery	
	Battery cables loose, corroded or worn	Repair or replace cables	
	Starter faulty	Repair starter	ST-3
Starter keeps running	Starter faulty	Repair starter	ST-3
	Ignition switch faulty	Replace ignition switch	
	Short in wiring	Repair wiring	
Starter spins — engine will not crank	Pinion gear teeth broken or faulty starter	Repair starter	ST-3
	Flywheel teeth broken	Replace flywheel	

STARTER

COMPONENTS

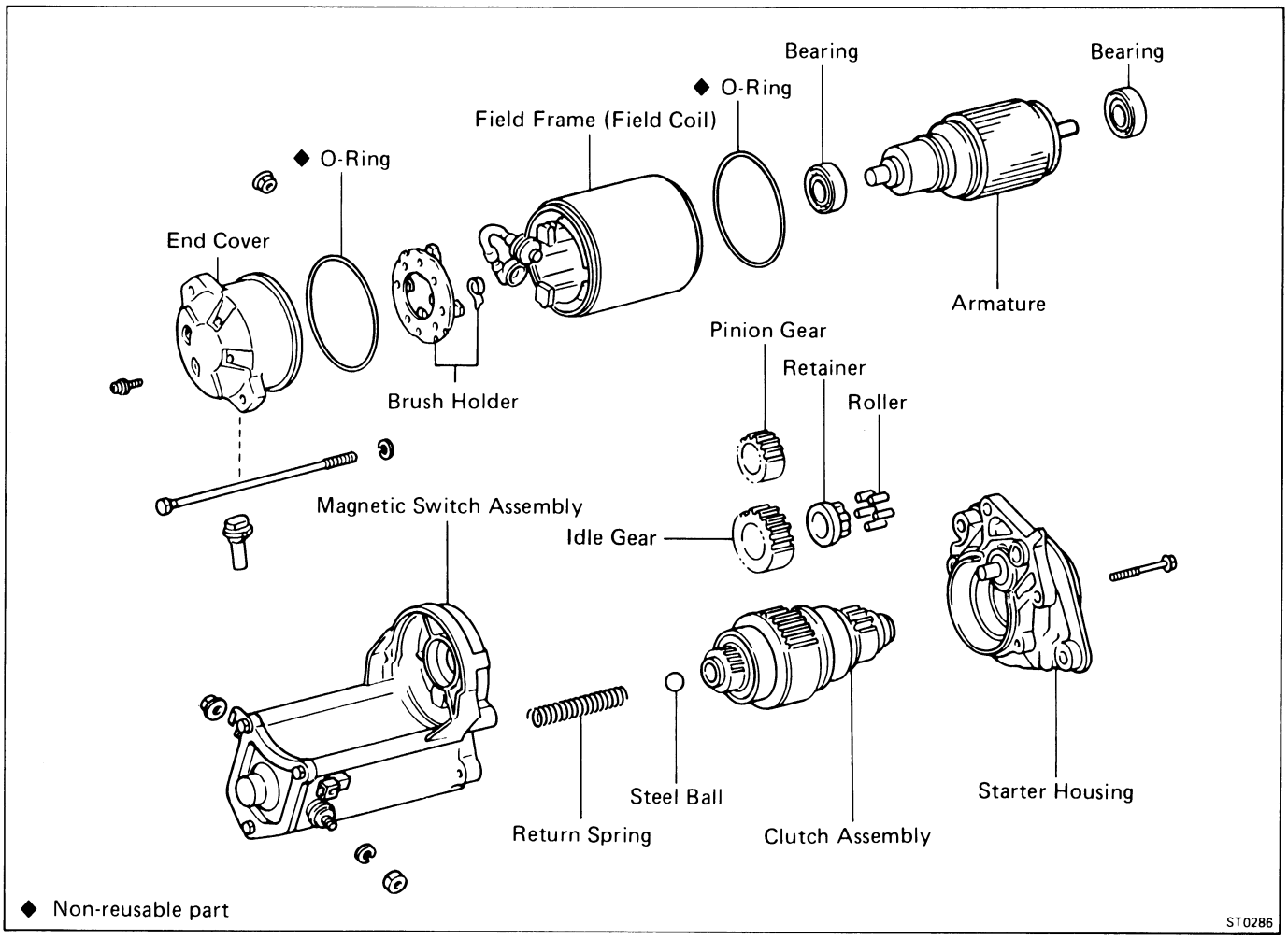

REMOVAL OF STARTER

1. **DISCONNECT CABLE FROM NEGATIVE TERMINAL OF BATTERY**

   CAUTION: Work must be started after approx. 20 seconds or longer from the time the ignition switch is turned to the "LOCK" position and the negative (—) terminal cable is disconnected from the battery.

2. **DISCONNECT TWO WIRES FROM STARTER**

   Remove the nut and disconnect the battery cable from the magnetic switch on the starter. Disconnect the other wire from terminal 50.

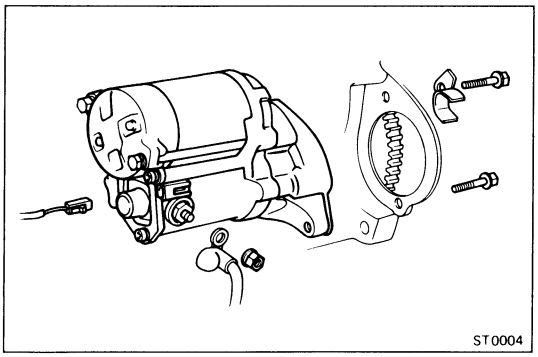

3. **REMOVE STARTER**

   Remove the two mounting bolts, and remove the starter from the flywheel bellhousing.

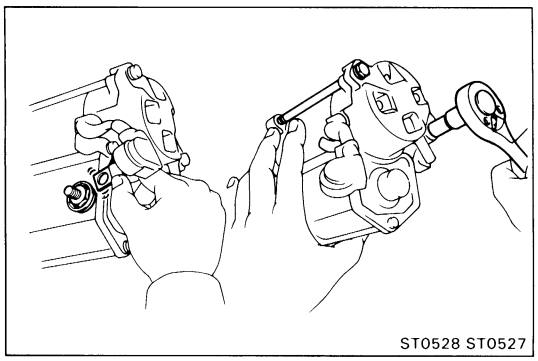

DISASSEMBLY OF STARTER

(See page ST-3)

1. REMOVE FIELD FRAME WITH ARMATURE FROM MAGNETIC SWITCH ASSEMBLY

(a) Remove the nut and, disconnect the lead wire from the magnetic switch terminal.

(b) Remove the two through bolts. Pull out the field frame with the armature from the magnetic switch assembly.

(c) Remove the O-ring.

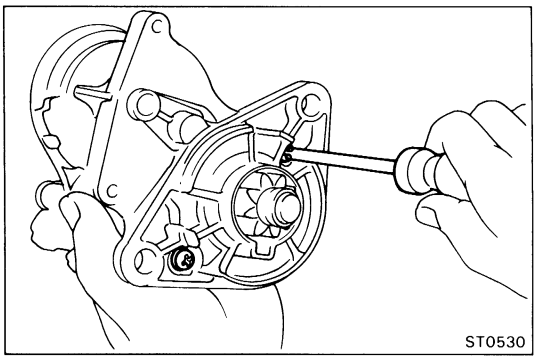

2. REMOVE STARTER HOUSING FROM MAGNETIC SWITCH ASSEMBLY

(a) Remove the two screws.

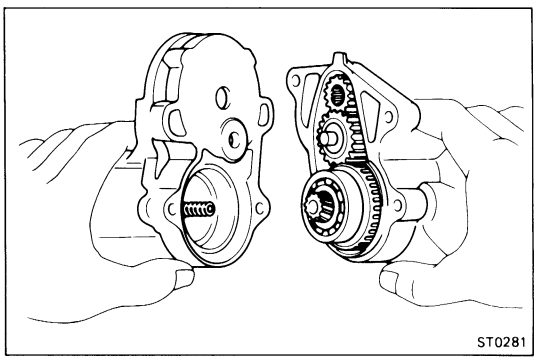

(b) Remove the starter housing with the pinion gear, idle gear, bearing and clutch assembly.

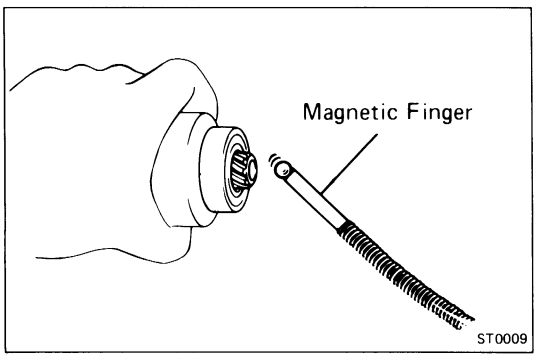

3. REMOVE CLUTCH ASSEMBLY AND GEARS FROM STARTER HOUSING

4. REMOVE STEEL BALL AND SPRING

Using a magnetic finger, remove the spring and steel ball from the clutch shaft hole.

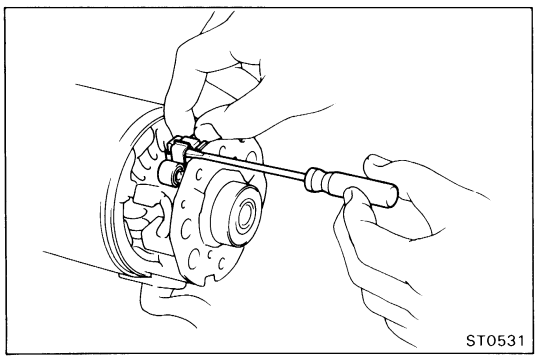

5. REMOVE BRUSHES AND BRUSH HOLDER

(a) Remove the end cover from the field frame.

(b) Remove the O-ring.

(c) Using a screwdriver, hold the spring back and disconnect the brush from the brush holder. Disconnect the four brushes and remove the brush holder.

6. REMOVE ARMATURE FROM FIELD FRAME

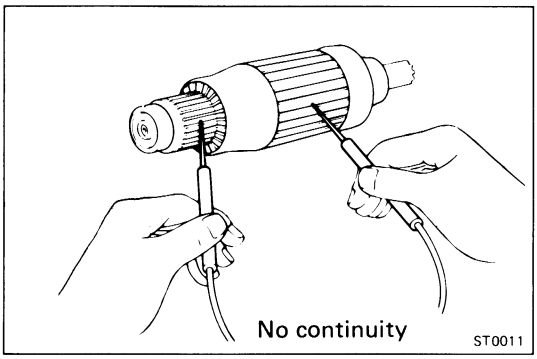

INSPECTION OF STARTER

Armature Coil

1. **INSPECT THAT COMMUTATOR IS NOT GROUNDED**

   Using an ohmmeter, check that there is no continuity between the commutator and armature coil core.

   If there is continuity, replace the armature.

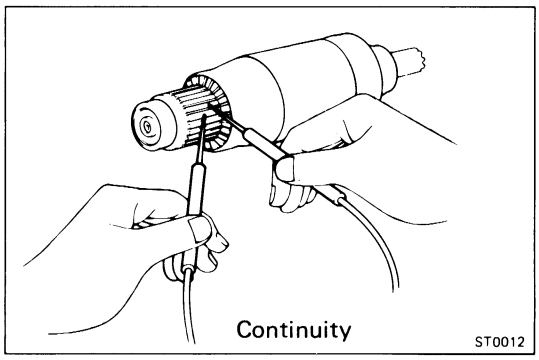

2. **INSPECT COMMUTATOR FOR OPEN CIRCUIT**

   Using an ohmmeter, check that there is continuity between the segments of the commutator.

   If there is no continuity between any segment, replace the armature.

Commutator

1. **INSPECT COMMUTATOR FOR DIRTY AND BURNT SURFACES**

   If the surface is dirty or burnt, correct it with sandpaper (No.400) or on a lathe.

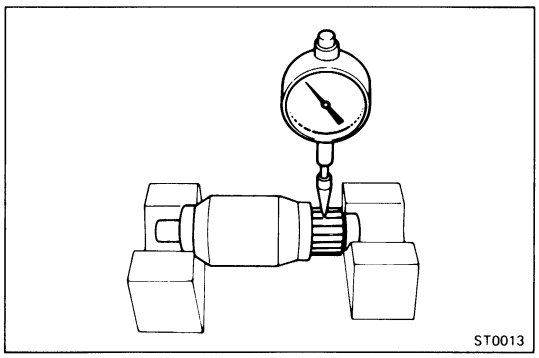

2. **INSPECT COMMUTATOR CIRCLE RUNOUT**

   (a) Place the commutator on V-blocks.

   (b) Using a dial indicator, measure the circle runout.

   Maximum circle runout: 0.05 mm (0.0020 in.)

   If the circle runout is greater than maximum, correct it on a lathe.

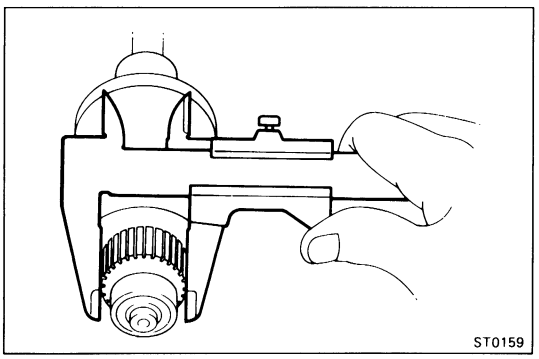

3. **INSPECT COMMUTATOR DIAMETER**

   Using vernier calipers, measure the commutator diameter.

   Standard diameter: 30 mm (1.18 in.)
   Minimum diameter: 29 mm (1.14 in.)

   If the diameter is less than minimum, replace the armature.

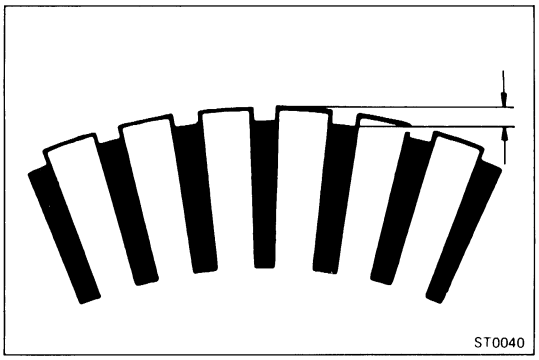

4. INSPECT UNDERCUT DEPTH OF SEGMENT

Check that the undercut depth is clean and free of foreign material. Smooth out the edge.

Standard undercut depth: 0.6 mm (0.024 in.)
Minimum undercut depth: 0.2 mm (0.008 in.)

If the undercut depth is less than minimum, correct it with a hacksaw blade.

Field Frame (Field Coil)

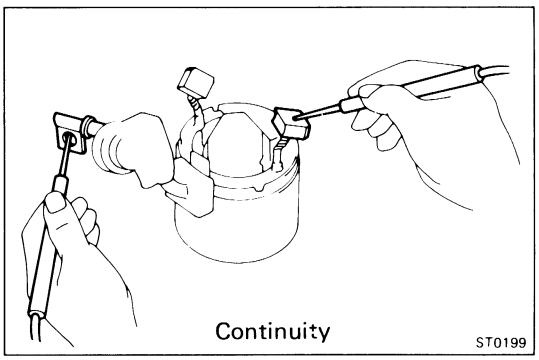

1. INSPECT FIELD COIL FOR OPEN CIRCUIT

Using an ohmmeter, check that there is continuity between the lead wire and field coil brush lead.

If there is no continuity, replace the field frame.

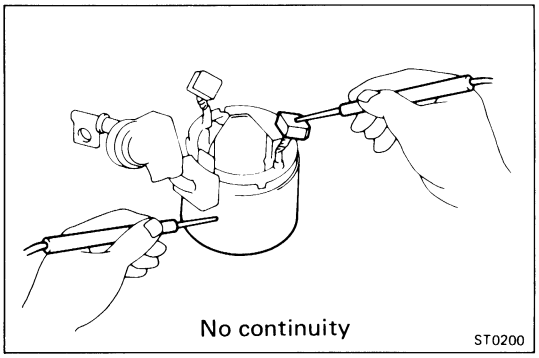

2. INSPECT THAT FIELD COIL IS NOT GROUNDED

Using an ohmmeter, check that there is no continuity between the field coil end and field frame.

If there is continuity, repair or replace the field frame.

Brushes

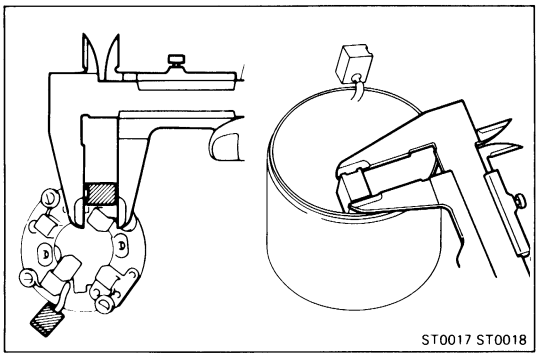

INSPECT BRUSH LENGTH

Using vernier calipers, measure the brush length.

Standard length: 15.5 mm (0.610 in.)
Minimum length: 10.0 mm (0.394 in.)

If the length is less than minimum, replace the brush holder and field frame.

Brush Springs

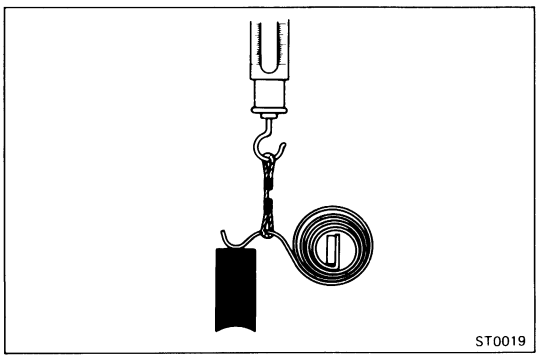

INSPECT BRUSH SPRING LOAD

Take the pull scale reading the instant the brush spring separates from the brush.

Standard installed load:
1,785 — 2,415 kg (3.9 — 5.3 lb,18 — 24 N)
Minimum installed load:
1.2 kg (2.6 lb,12 N)

If the installed load is less than minimum, replace the brush springs.

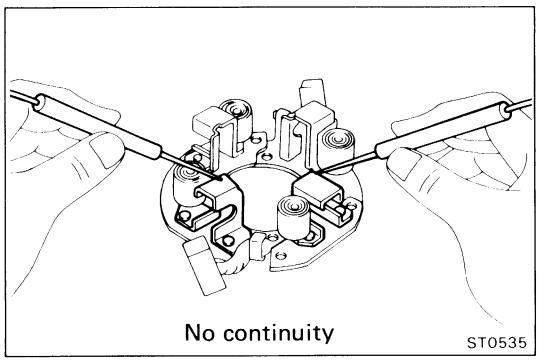

Brush Holder

INSPECT INSULATION OF BRUSH HOLDER

Using an ohmmeter, check that there is no continuity between the positive (+) and negative (−) brush holders.

If there is continuity, repair or replace the brush holder.

Clutch and Gears

1. INSPECT GEAR TEETH

Check the gear teeth on the pinion gear, idle gear and clutch assembly for wear or damage.

If damaged,replace the gear or clutch assembly.

If damaged, also check the flywheel ring gear for wear or damage.

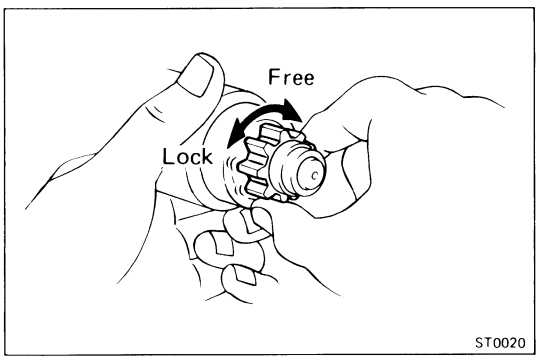

2. INSPECT CLUTCH

Rotate the clutch pinion gear clockwise and check that it turns freely. Try to rotate the clutch pinion counterclockwise and check that it locks.

If necessary, replace the clutch assembly

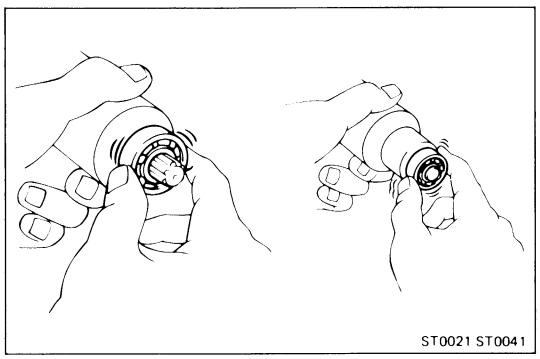

Bearings

1. INSPECT BEARINGS

Turn each bearing by hand while applying inward force.

If resistance is felt or if the bearing sticks, replace the bearing.

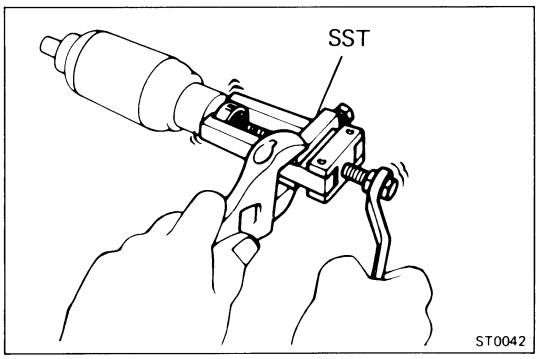

2. IF NECESSARY, REPLACE BEARINGS

(a) Using SST, remove the bearing.

SST 09286-46011

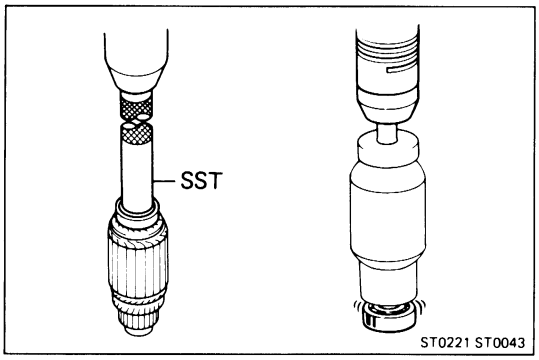

(b) Using SST and a press, press in a new front bearing.

SST 09201-41020

(c) Using a press, press in a new rear bearing.

Magnetic Switch

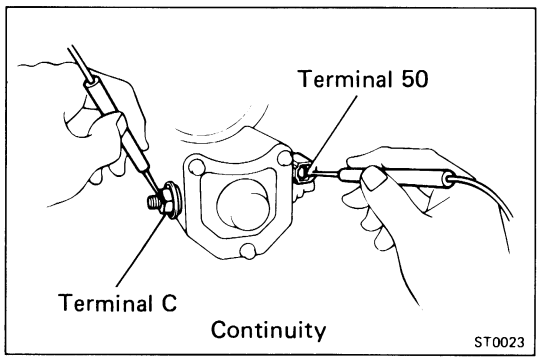

1. PERFORM PULL-IN COIL OPEN CIRCUIT TEST

Using an ohmmeter, check that there is continuity between terminal 50 and C.

If there is no continuity, replace the magnetic switch assembly.

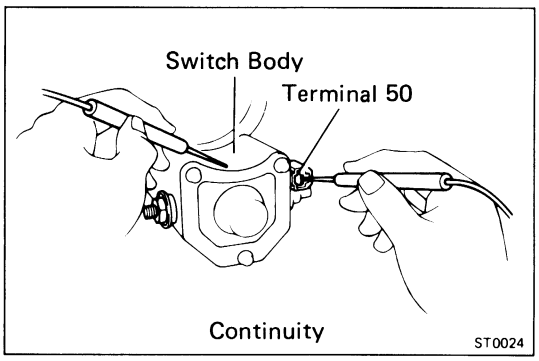

2. PERFORM HOLD-IN COIL CIRCUIT TEST

Using an ohmmeter, check that there is continuity between terminal 50 and the switch body.

If there is no continuity, replace the magnetic switch assembly.

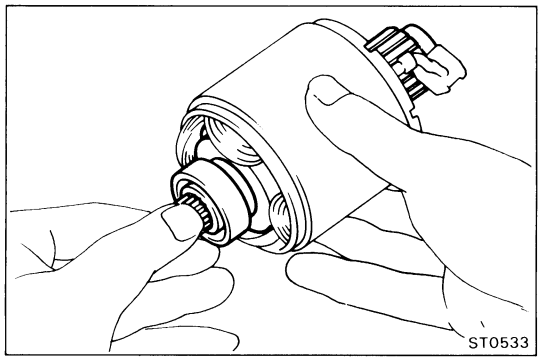

ASSEMBLY OF STARTER

(See page ST-3)

HINT: Use high-temperature grease to lubricate the bearings and gears when assembling the starter.

1. PLACE ARMATURE INTO FIELD FRAME

Apply grease to the armature bearings and insert the armature into the field frame.

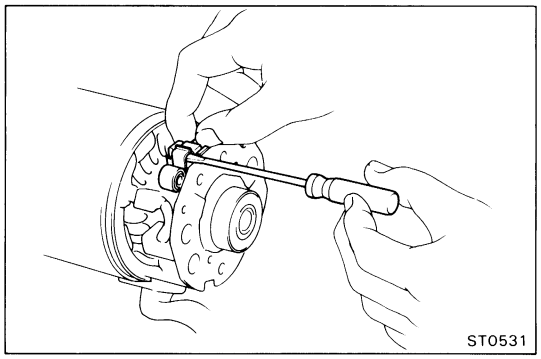

2. INSTALL BRUSH HOLDER

(a) Using a screwdriver, hold the brush spring back, and connect the brush into the brush holder. Connect the four brushes.

HINT: Check that the positive (+) lead wires are not grounded.

(b) Place a new O-ring on the field frame.

(c) Install the end cover to the field frame.

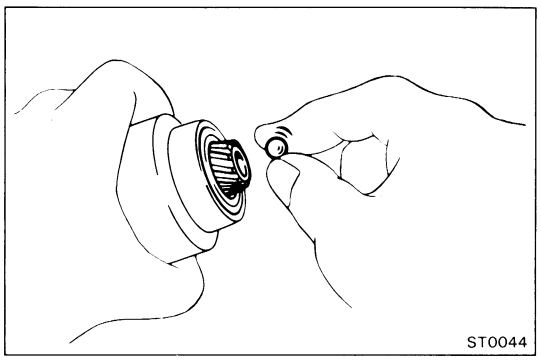

3. INSERT STEEL BALL INTO CLUTCH SHAFT HOLE

(a) Apply grease to the steel ball.

(b) Insert the steel ball into the clutch shaft hole.

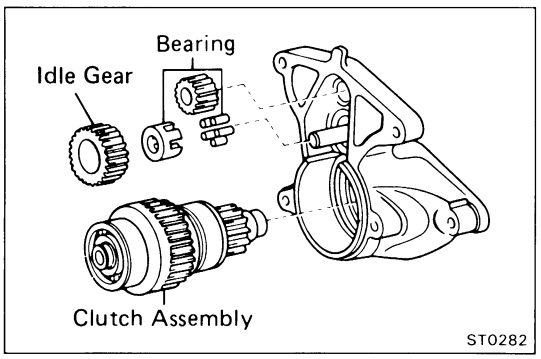

4. INSTALL GEARS AND CLUTCH ASSEMBLY

(a) Apply grease to the gears and clutch assembly.

(b) Place the clutch assembly, idle gear, bearing and pinion gear in the starter housing.

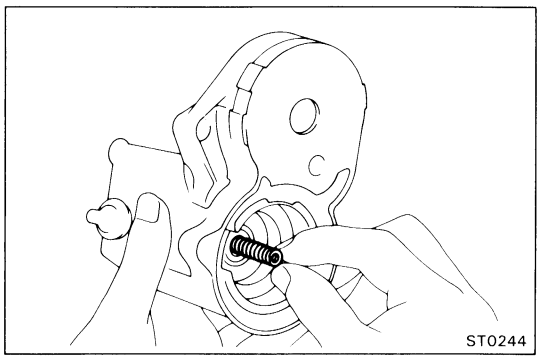

5. INSTALL STARTER HOUSING

(a) Apply grease to the return spring.

(b) Insert the return spring into the magnetic hole.

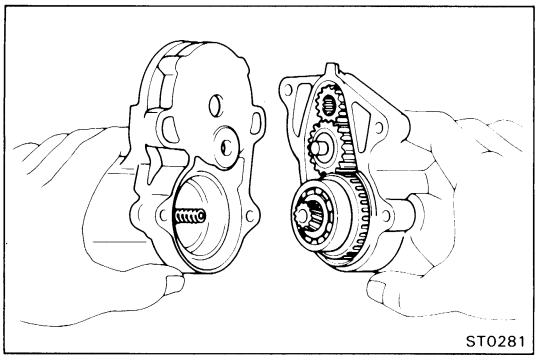

(c) Place the starter housing on the magnetic switch and install the two screws.

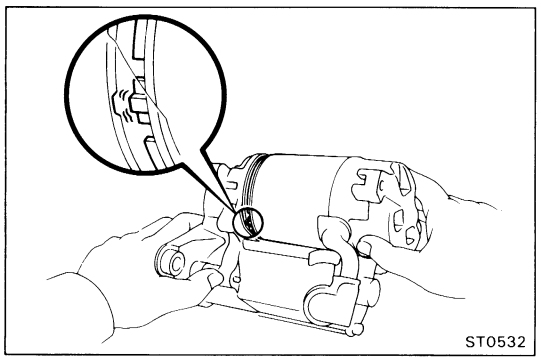

6. INSTALL FIELD FRAME WITH ARMATURE TO MAGNETIC SWITCH ASSEMBLY

(a) Place a new O-ring on the field frame.

(b) Align the protrusion of the field frame with the cutout of the magnetic switch.

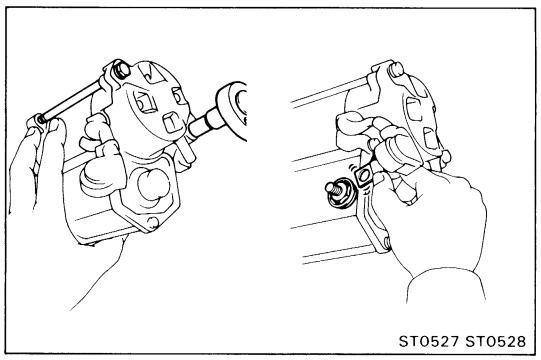

(c) Install the two through bolts.

(d) Connect the lead wire to the magnetic switch terminal C, and install the nut.

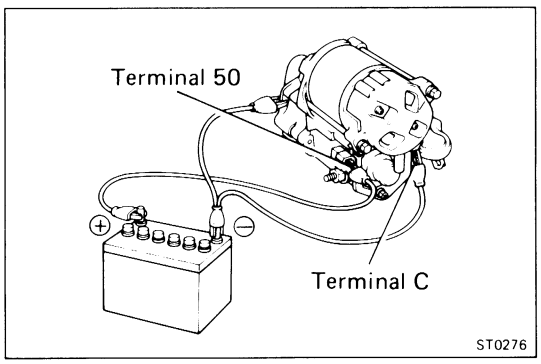

PERFORMANCE TEST OF STARTER

NOTICE: These tests must be performed within 3 to 5 seconds to avoid burning out the coil.

1. PERFORM PULL-IN TEST

(a) Disconnect the field coil lead wire from terminal C.

(b) Connect the battery to the magnetic switch as shown. Check that the clutch pinion gear moves outward.

If the clutch pinion gear does not move, replace the magnetic switch assembly.

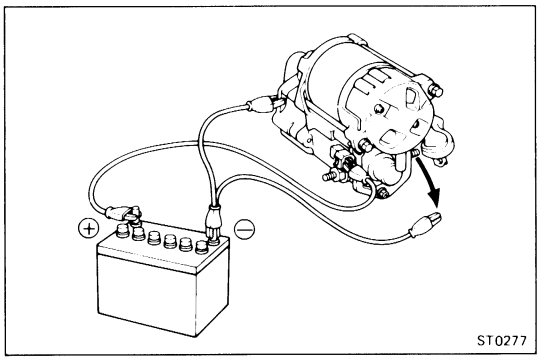

2. PERFORM HOLD-IN TEST

While connected as above with the clutch pinion gear out, disconnect the negative (−) lead from terminal C. Check that the pinion gear remains out.

If the clutch pinion gear returns inward, replace the magnetic switch assembly.

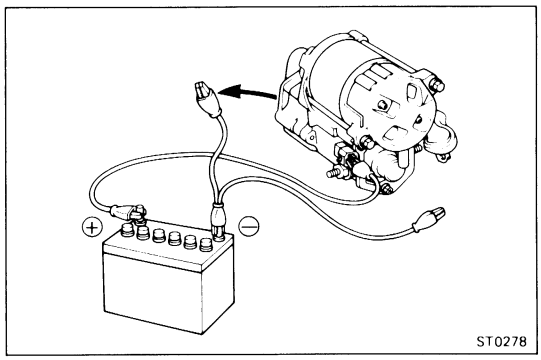

3. INSPECT CLUTCH PINION GEAR RETURN

Disconnect the negative (−) lead from the switch body. Check that the clutch pinion gear returns inward.

If the clutch pinion gear does not return, replace the magnetic switch assembly.

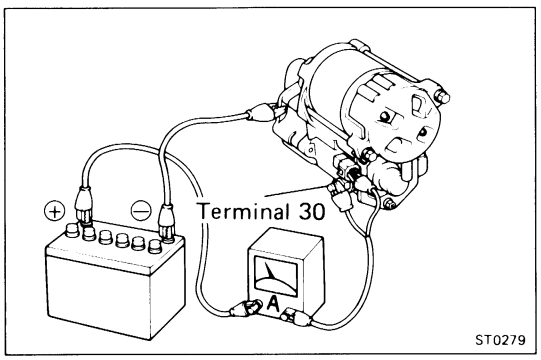

4. PERFORM NO-LOAD PERFORMANCE TEST

(a) Connect the battery and ammeter to the starter as shown.

(b) Check that the starter rotates smoothly and steadily with the pinion gear moving out. Check that the ammeter reads the specified current.

Specified current: 90 A or less at 11.5 V

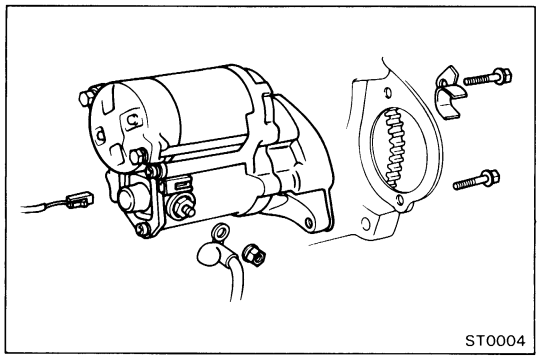

INSTALLATION OF STARTER

1. **INSTALL STARTER ON TRANSAXLE**

   Place the starter in the flywheel bellhousing, and install and torque the starter mounting bolts.

   Torque: 400 kg-cm (29 ft-lb,39 N·m)

2. **CONNECT TWO WIRES TO STARTER**

   Connect the connector to the terminal on the magnetic switch. Connect the cable from the battery to the terminal on the switch, and install the nut.

3. **CONNECT CABLE TO NEGATIVE TERMINAL OF BATTERY**

   Check that the engine starts.

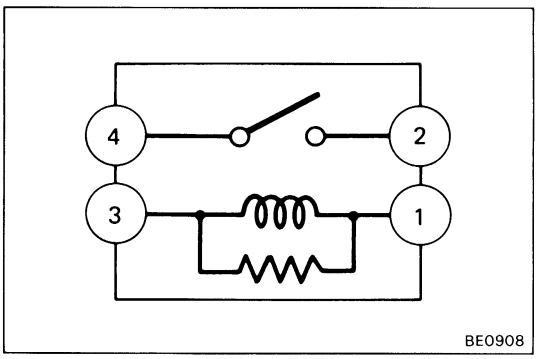

STARTER RELAY (ex. Canada A/T)

INSPECTION OF STARTER RELAY

INSPECT STARTER RELAY

LOCATION: The relay located in the passenger's kick panel.

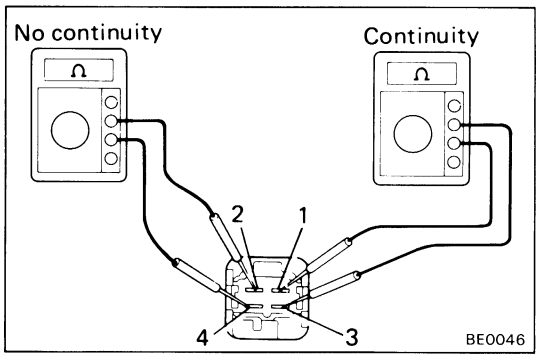

Inspect Relay Continuity

(a) Using an ohmmeter, check that there is continuity between terminals 1 and 3.

(b) Check that there is no continuity between terminals 2 and 4.

If continuity is not as specified, replace the relay.

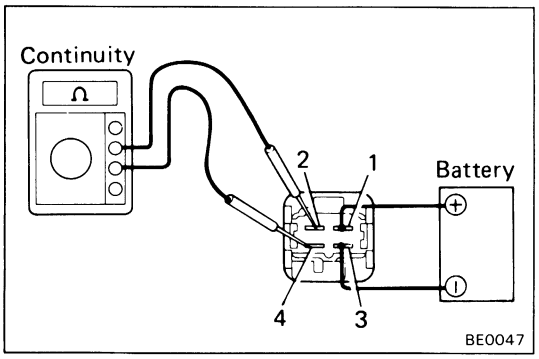

Inspect Relay Operation

(a) Apply battery voltage across terminals 1 and 3.

(b) Check that there is continuity between terminals 2 and 4.

If operation is not as described, replace the relay.

CLUTCH START SWITCH (M/T)

(See page CL-4)

CHARGING SYSTEM

	Page
PRECAUTIONS	CH-2
TROUBLESHOOTING	CH-2
ON-VEHICLE INSPECTION	CH-2
ALTERNATOR	CH-6

PRECAUTIONS

1. **Check that the battery cables are connected to the correct terminals.**
2. **Disconnect the battery cables when the battery is given a quick charge.**
3. **Do not perform tests with a high voltage insulation resistance tester.**
4. **Never disconnect the battery while the engine is running.**

TROUBLESHOOTING

Problem	Possible cause	Remedy	Page
Discharge warning light does not light with ignition ON and engine off	Fuse blown	Check "IGN" fuse	
	Light burned out	Replace light	
	Wiring connection loose	Tighten loose connections	
	IC regulator faulty	Replace IC regulator	CH-6
Discharge warning light does not go out with engine running (battery requires frequent recharging)	Drive belt loose or worn	Adjust or replace drive belt	CH-3
	Battery cables loose, corroded or worn	Repair or replace cables	
	Fuse blown	Check "ENGINE" fuse	
	Fusible link blown	Replace fusible link	
	IC regulator or alternator faulty	Check charging system	CH-4
	Wiring faulty	Repair wiring	

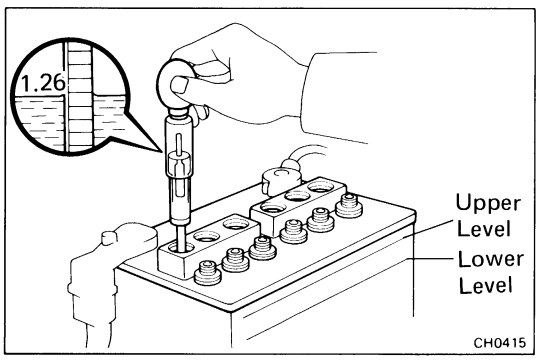

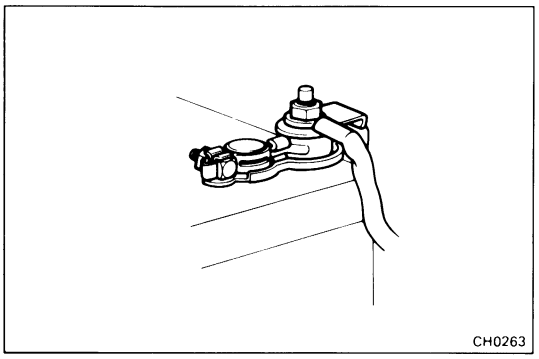

ON-VEHICLE INSPECTION

1. **INSPECT BATTERY SPECIFIC GRAVITY AND ELECTROLYTE LEVEL**

   (a) Check the specific gravity of each cell.

   Standard specific gravity

   When fully charged at 20°C (68°F): 1.25 — 1.27

   If not within specifications, charge the battery.

   (b) Check the electrolyte quantity of each cell.

   If insufficient, refill with distilled (or purified) water.

2. **CHECK BATTERY TERMINALS AND FUSIBLE LINKS**

   (a) Check that the battery terminals are not loose or corroded.

   (b) Check the fusible links for continuity.

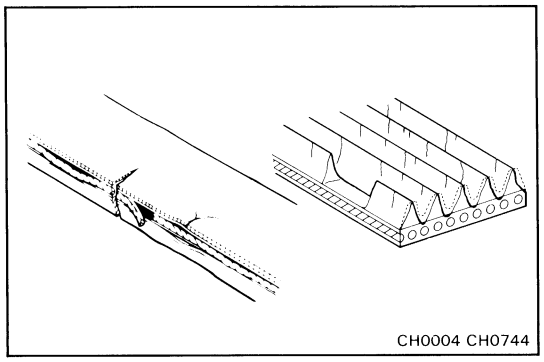

3. INSPECT DRIVE BELT

(a) Visually check the belt for excessive wear, frayed cords etc.

If necessary, replace the drive belt.

HINT: Cracks on the rib side of a belt are considered acceptable. If the belt has chunks missing from the ribs, it should be replaced.

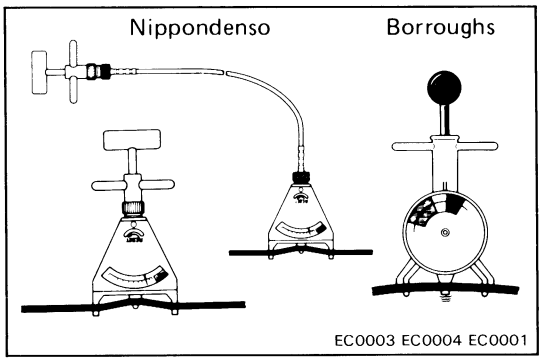

(b) Using a belt tension gauge, check the drive belt tension.

Belt tension gauge:

Nippondenso	**BTG-20 (95506-00020) or**
Borroughs	**No. BT-33-73F**

Drive belt tension:

New belt	**175 ± 5 lb**
Used belt	**115 ± 20 lb**

If necessary, adjust the drive belt tension.

HINT:

- ''New belt'' refers to a belt which has been used less than 5 minutes on a running engine.
- ''Used belt'' refers to a belt which has been used on a running engine for 5 minutes or more.
- After installing the drive belt, check that it fits properly in the ribbed grooves. Check with your hand to confirm that the belt has not slipped out of the groove on the bottom of the crank pulley.
- After installing a new belt, run the engine for about 5 minutes and then recheck the tension.

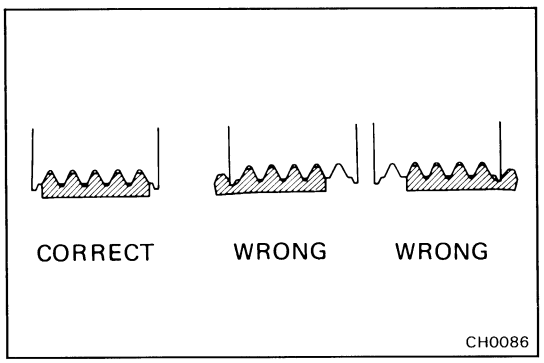

4. INSPECT FUSES FOR CONTINUITY

- **IGN 7.5A**
- **ENGINE 15A**

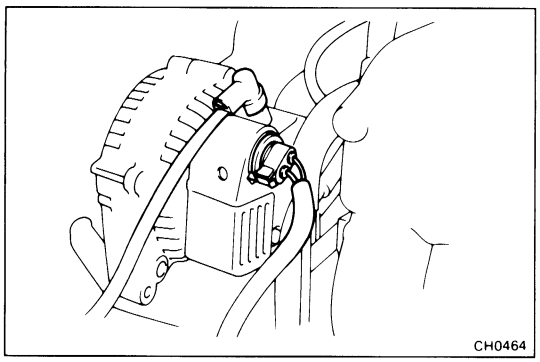

5. VISUALLY CHECK ALTERNATOR WIRING AND LISTEN FOR ABNORMAL NOISES

(a) Check that the wring is in good condition.

(b) Check that there is no abnormal noise from the alternator while the engine is running.

6. INSPECT DISCHARGE WARNING LIGHT CIRCUIT

(a) Warm up the engine and turn it off.

(b) Turn off all accessories.

(c) Turn the ignition switch to ON. Check that the discharge warning light is lit.

(d) Start the engine. Check that the light goes out.

If the light does not operate as specified, troubleshoot the warning light circuit.

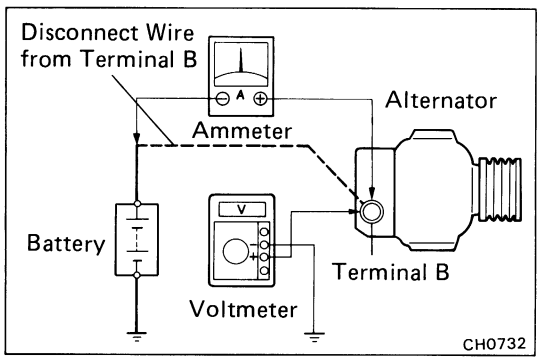

7. CHECK CHARGING CIRCUIT WITHOUT LOAD

HINT: If a battery/alternator tester is available, connect the tester to the charging circuit according to the manufacturer's instructions.

(a) If a tester is not available, connect a voltmeter and ammeter to the charging circuit as follows:

- Disconnect the wire from terminal B of the alternator and connect the wire to the negative (−) terminal of the ammeter.
- Connect the test lead from the positive (+) terminal of the ammeter to terminal B of the alternator.
- Connect the positive (+) lead of the voltmeter to terminal B of the alternator.
- Ground the negative (−) lead of the voltmeter.

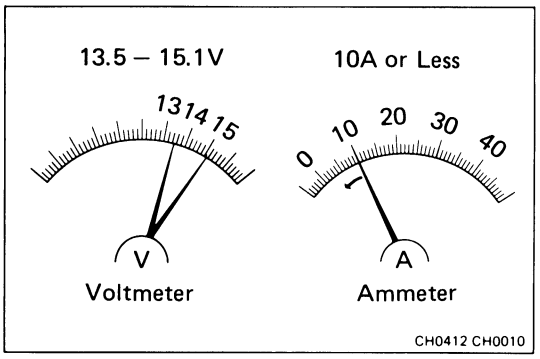

(b) Check the charging circuit as follows:
With the engine running from idling to 2,000 rpm, check the reading on the ammeter and voltmeter.

Standard amperage: 10 A or less

Standard voltage: 13.9 – 15.1 V at 25°C (77°F)
13.5 – 14.3 V at 115°C (239°F)

If the voltage reading is greater than standard voltage, replace the IC regulator.

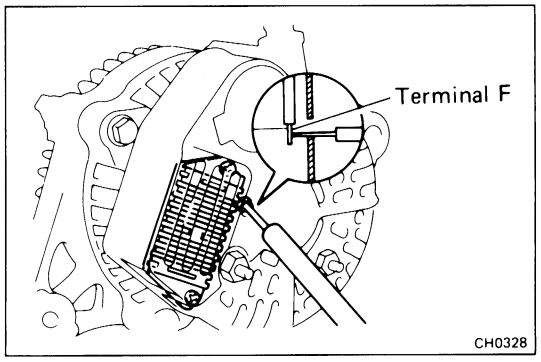

If the voltage reading is less than standard voltage, check the IC regulator and alternator as follows:

- With terminal F grounded, start the engine and check the voltage reading of terminal B.
- If the voltage reading is higher than standard voltage, replace the IC regulator.
- If the voltage reading is less than standard voltage, repair the alternator.

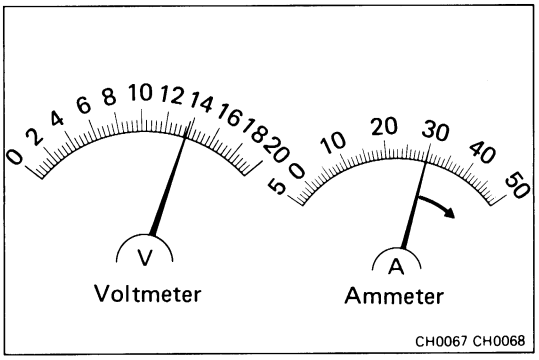

8. INSPECT CHARGING CIRCUIT WITH LOAD

(a) With the engine running at 2,000 rpm, turn on the high beam headlights and place the heater fan control switch at HI.

(b) Check the reading on the ammeter.

Standard amperage: 30 A or more

If the ammeter reading is less than 30 A, repair the alternator. (See page CH-6)

HINT: If the battery is fully charged, the indication will sometimes be less than 30 A.

ALTERNATOR

COMPONENTS

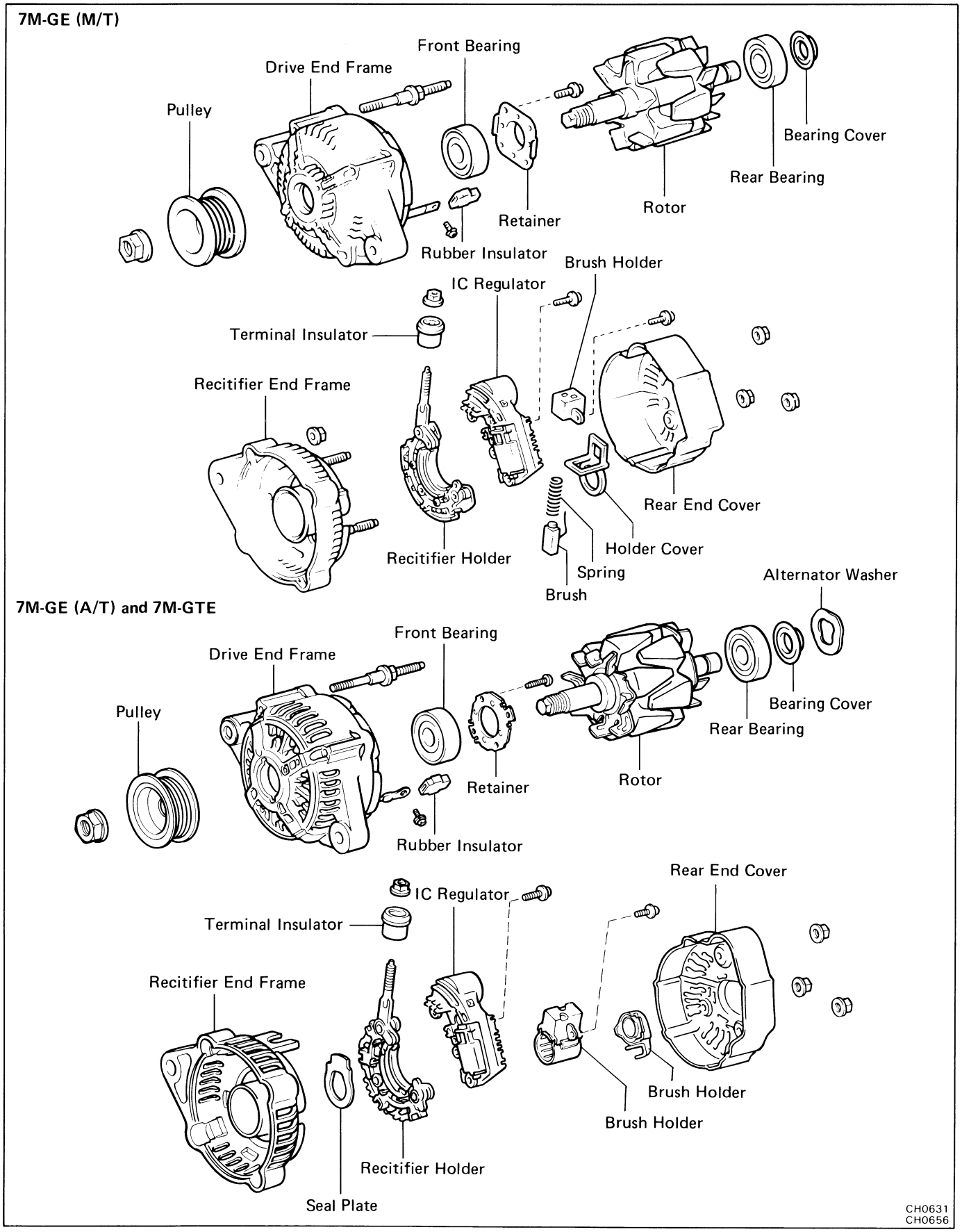

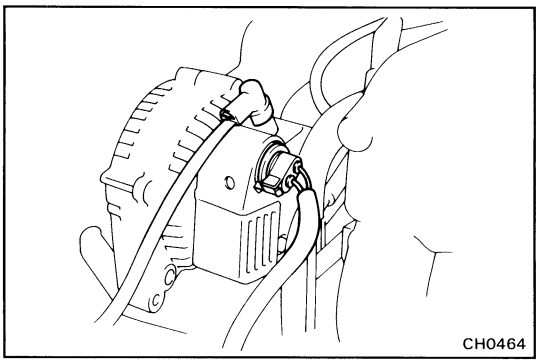
CH0464

REMOVAL OF ALTERNATOR

1. **DISCONNECT CABLE FROM NEGATIVE TERMINAL OF BATTERY**

   CAUTION: Work must be started after approx. 20 seconds or longer from the time the ignition switch is turned to the "LOCK" position and the negative (−) terminal cable is disconnected from the battery.

2. **DISCONNECT WIRING FROM ALTERNATOR**
   (a) Disconnect the connector from the alternator.
   (b) Remove the nut and disconnect the wire from the alternator.

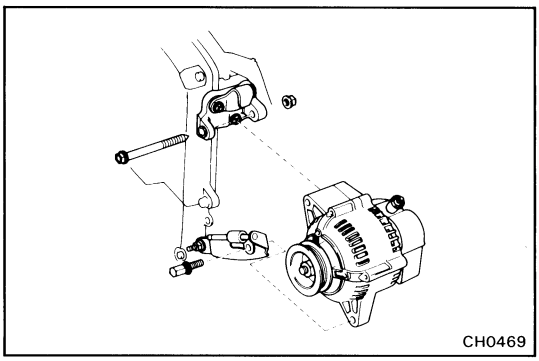
CH0469

3. **REMOVE ALTERNATOR DRIVE BELT**

   Loosen the alternator pivot bolts, adjusting nut and lock bolt and remove the alternator drive belt.

4. **REMOVE ALTERNATOR**
   (a) Remove the pivot bolt, nut and adjusting lock bolt.
   (b) Remove the alternator.

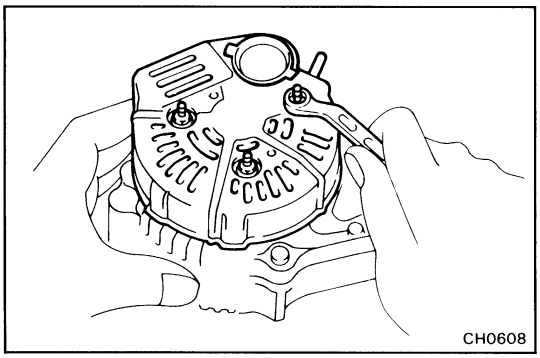
CH0608

DISASSEMBLY OF ALTERNATOR

(See page CH-6)

1. **REMOVE REAR END COVER**
   (a) Remove the nut and terminal insulator from the positive (+) terminal.
   (b) Remove the three nuts and rear end cover.

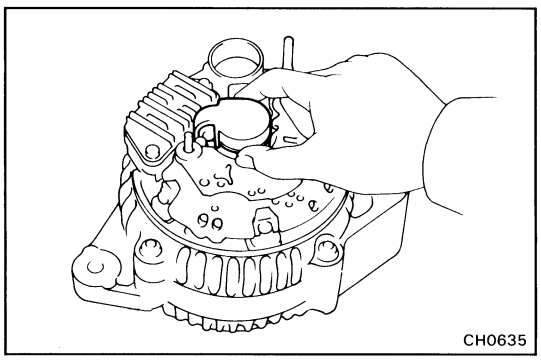
CH0635

2. **REMOVE BRUSH HOLDER AND IC REGULATOR**
   (a) [7M-GE (A/T) and 7M-GTE]
   Remove the brush holder cover from the brush holder.

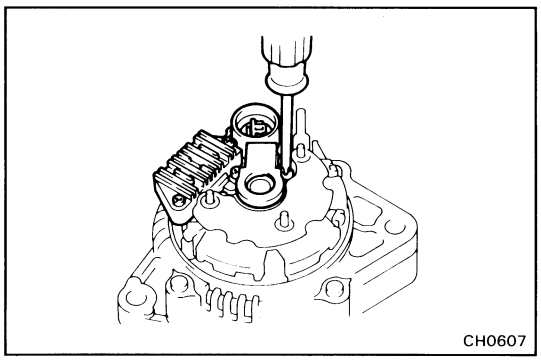
CH0607

   (b) Remove the five screws, brush holder and IC regulator.

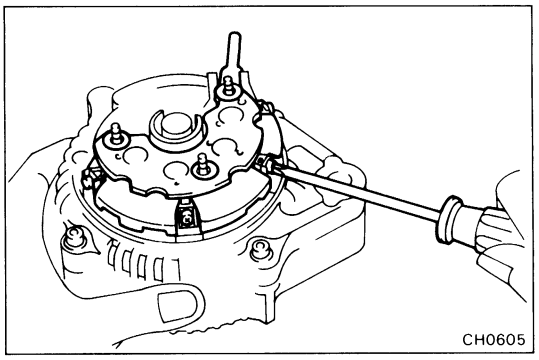

3. REMOVE RECTIFIER HOLDER

(a) Remove the four screws and rectifier holder.

(b) Remove the four rubber insulators.

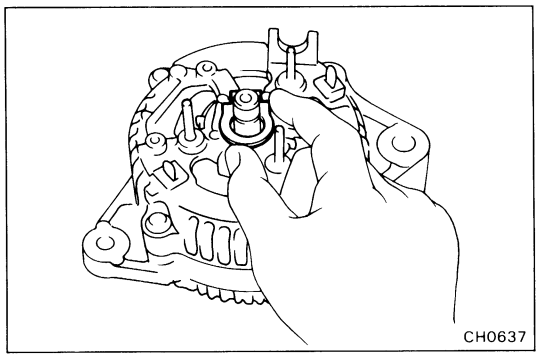

4. [7M-GE (A/T) and 7M-GTE]
REMOVE SEAL PLATE

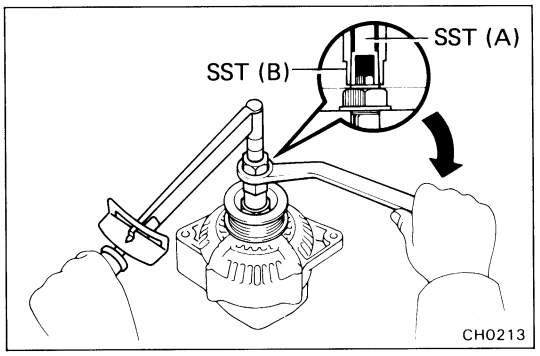

5. REMOVE PULLEY

(a) Hold SST (A) with a torque wrench, and tighten SST (B) clockwise to the specified torque.

SST 09820-63010

Torque: 400 kg-cm (29 ft-lb, 39 N·m)

(b) Check that SST (A) is secured to the rotor shaft.

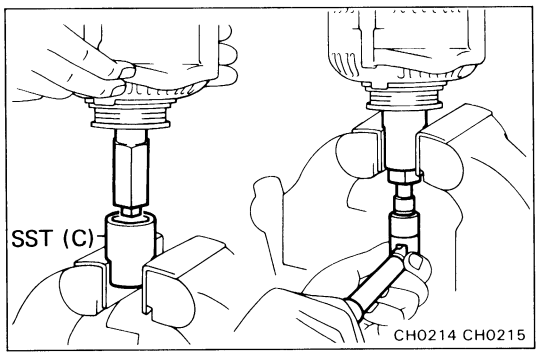

(c) As shown in the illustration, mount SST (C) in a vise, and install the alternator to SST (C).

(d) To loosen the pulley nut, turn SST (A) in the direction shown in the illustration.

NOTICE: To prevent damage to the rotor shaft, do not loosen the pulley nut more that one-half of a turn.

(e) Remove the alternator from SST (C).

(f) Turn SST (B) and remove SST (A and B).

(g) Remove the pulley nut and pulley.

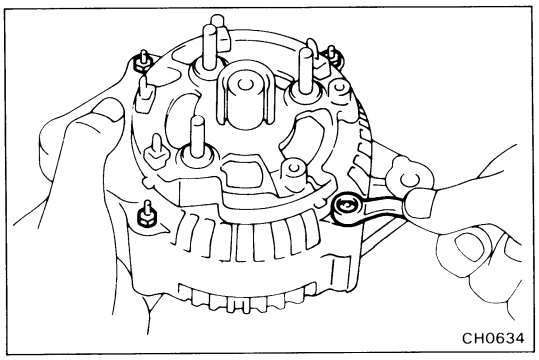

6. REMOVE RECTIFIER END FRAME

(a) Remove the four nuts.

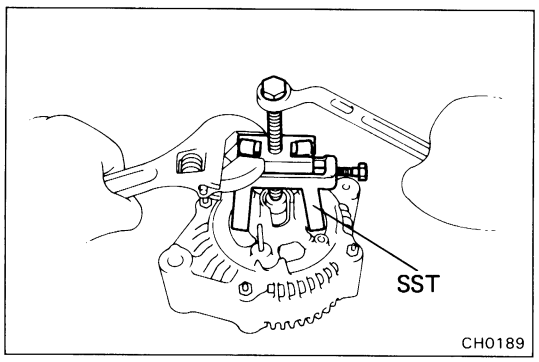

(b) Using SST, remove the rectifier end frame.
SST 09286-46011

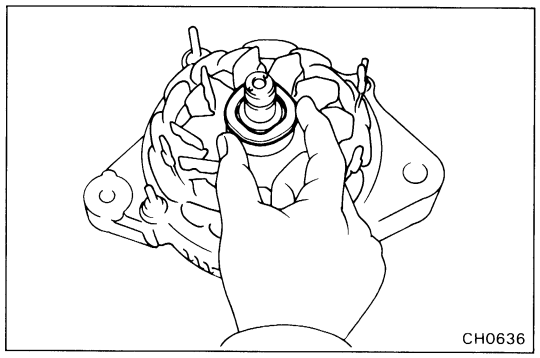

7. [7M-GE (A/T) and 7M-GTE]
REMOVE ALTERNATOR WASHER

8. REMOVE ROTOR FROM DRIVE END FRAME

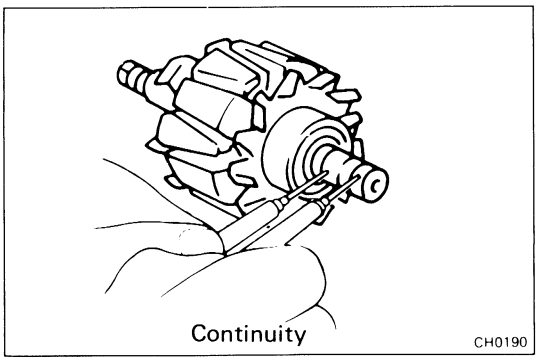

INSPECTION AND REPAIR OF ALTERNATOR

Rotor

1. INSPECT ROTOR FOR OPEN CIRCUIT

Using an ohmmeter, check that there is continuity between the slip rings.

Standard resistance (cold): 2.8 — 3.0 Ω

If there is no continuity, replace the rotor.

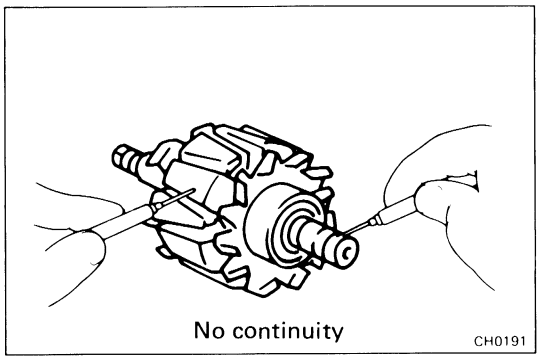

2. INSPECT ROTOR FOR GROUND

Using an ohmmeter, check that there is no continuity between the slip ring and the rotor.

If there is continuity, replace the rotor.

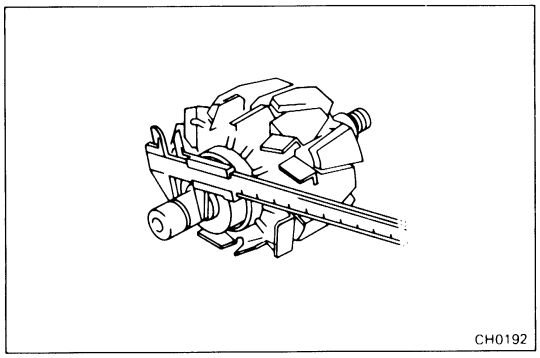

3. INSPECT SLIP RINGS

(a) Check that the slip rings are not rough or scored.

If rough or scored, replace the rotor.

(b) Using vernier calipers, measure the slip ring diameters.

Standard diameter: 14.2 — 14.4 mm (0.559 — 0.567 in.)

Minimum diameter: 12.8 mm (0.504 in.)

If the diameter is less than minimum, replace the rotor.

Stator

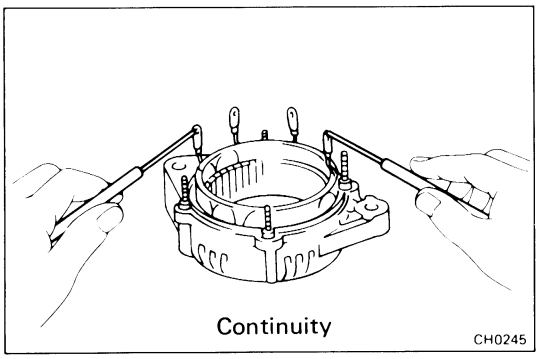

1. INSPECT STATOR FOR OPEN CIRCUIT

Using an ohmmeter, check that there is continuity between the coil leads.

If there is no continuity, replace the drive end frame assembly.

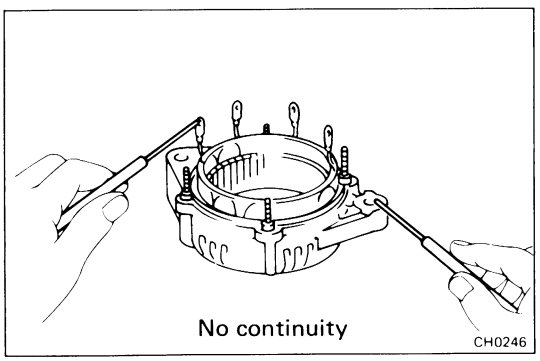

2. INSPECT STATOR FOR GROUND

Using an ohmmeter, check that there is no continuity between the coil leads and drive end frame.

If there is continuity, replace the drive end frame assembly.

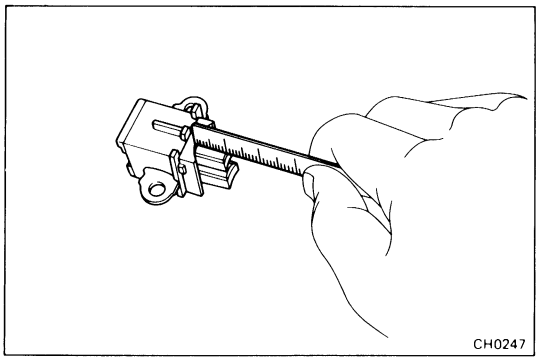

Brushes

1. INSPECT EXPOSED BRUSH LENGTH

Using a scale, measure the exposed brush length.

Standard exposed length: 10.5 mm (0.413 in.)

Minimum exposed length: 1.5 mm (0.059 in.)

[7M-GE (M/T)]
If the exposed length is less than minimum, replace the brushes.

[7M-GE (A/T) and 7M-GTE]
If the exposed length is less than minimum, replace the brush holder.

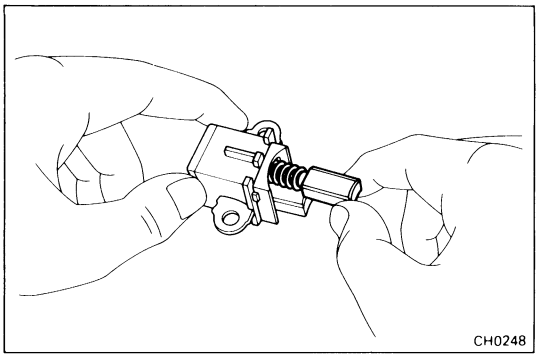

2. [7M-GE (M/T)]
IF NECESSARY, REPLACE BRUSHES

(a) Unsolder and remove the brush and spring.

(b) Run wire of the brush through the hole in the brush holder, and insert the spring and brush into the brush holder.

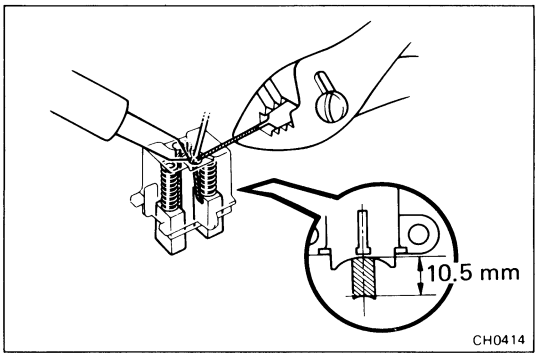

(c) Solder the brush wire to the brush holder at the exposed length.

Exposed length: 10.5 mm (0.413 in.)

(d) Check that the brush moves smoothly in the brush holder.

(e) Cut off the excess wire.

(f) Apply insulation paint to the soldered point.

Rectifiers (Rectifier Holder)

1. INSPECT POSITIVE SIDE RECTIFIER

(a) Using an ohmmeter, connect one tester prove to the positive (+) stud and the other to each rectifier terminal.

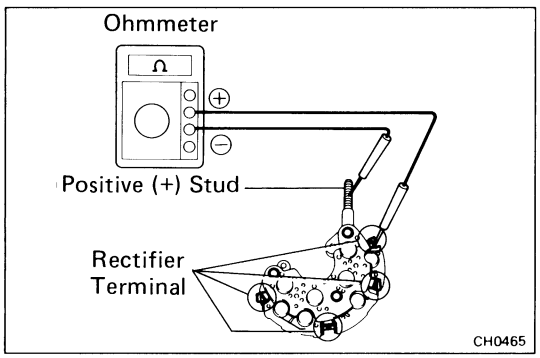

(b) Reverse the polarity of the tester probes.

(c) Check that one shows continuity and the other shows no continuity.

If not, replace the rectifier holder.

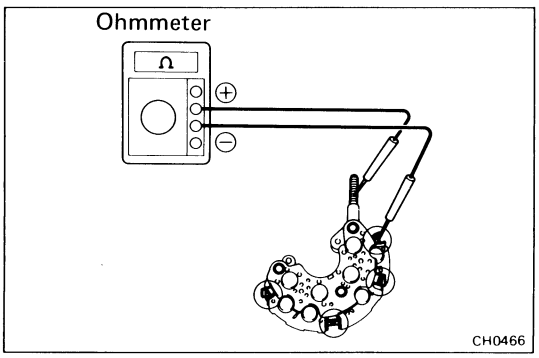

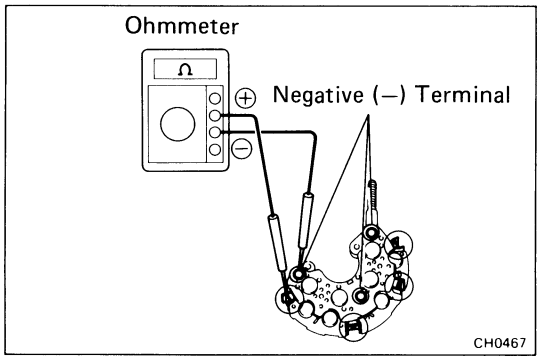

2. INSPECT NEGATIVE SIDE RECTIFIER

(a) Connect one tester probe to each rectifier terminal and the other to each rectifier negative (−) terminal.

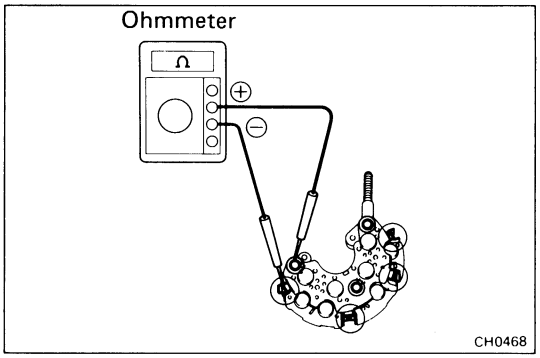

(b) Reverse the polarity of the tester probes.

(c) Check that one shows continuity and the other shows no continuity.

If not, replace the rectifier holder.

Bearings

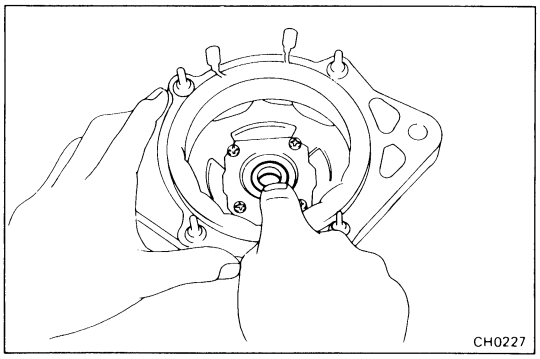

1. INSPECT FRONT BEARING

Check that the bearing is not rough or worn.

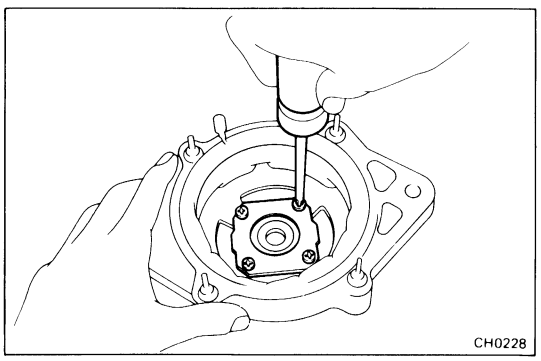

2. IF NECESSARY, REPLACE FRONT BEARING

(a) Remove the four screws and bearing retainer.

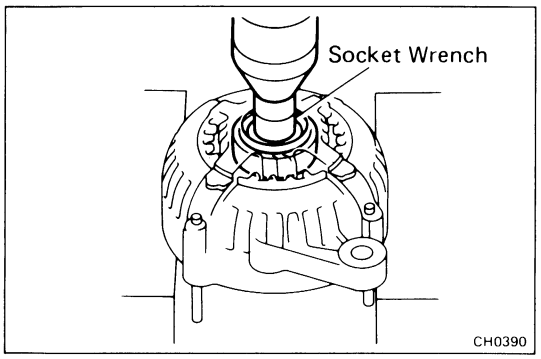

(b) Using a press and socket wrench, press out the front bearing.

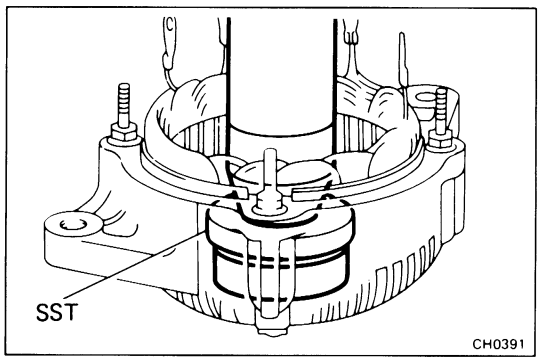

(c) Using SST and a press, press a new front bearing into the drive end frame.

SST 09608-20012 (09608-00030)

(d) Install the bearing retainer with the four screws.

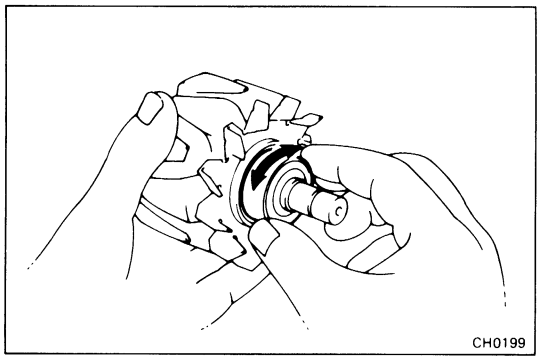

3. INSPECT REAR BEARING

Check that the bearing is not rough or worn.

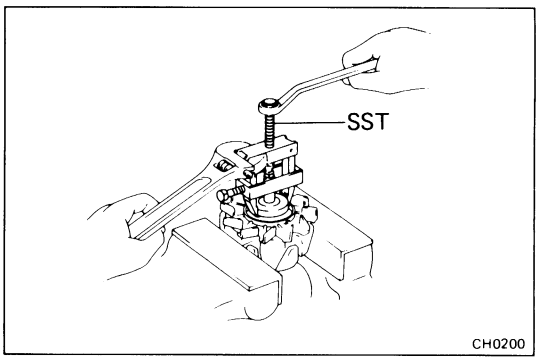

4. IF NECESSARY, REPLACE REAR BEARING

(a) Using SST, remove the bearing cover and bearing.

SST 09820-00021

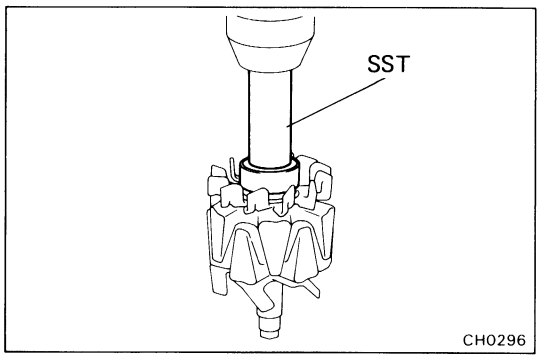

(b) Using SST and a press, press in a new bearing and the bearing cover.

SST 09820-00030

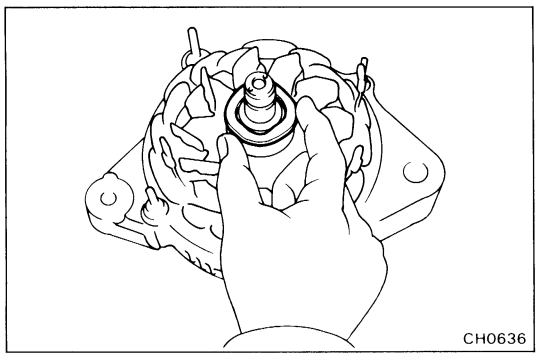

ASSEMBLY OF ALTERNATOR

(See page CH-6)

1. INSTALL ROTOR TO DRIVE END FRAME

2. [7M-GE (A/T) and 7M-GTE]
PLACE ALTERNATOR WASHER ON REAR BEARING

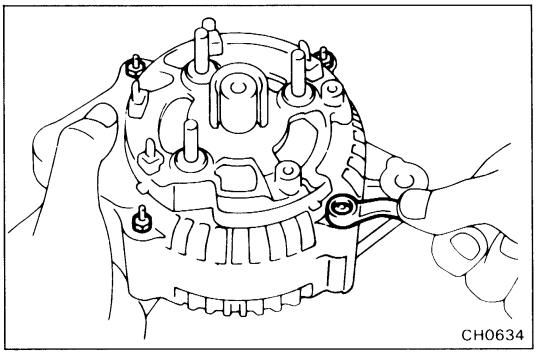

3. INSTALL RECTIFIER END FRAME

(a) Using a plastic-faced hammer, lightly tap in the end frame.

(b) Install the four nuts.

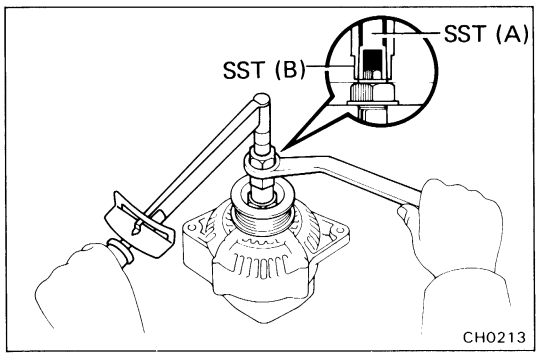

4. INSTALL PULLEY

(a) Install the pulley to the rotor shaft by tightening the pulley nut by hand.

(b) Hold SST (A) with a torque wrench, and tighten SST (B) clockwise to the specified torque.

SST 09820-63010

Torque: 400 kg-cm (29 ft-lb,39 N·m)

(c) Check that SST (A) is secured to the pulley shaft.

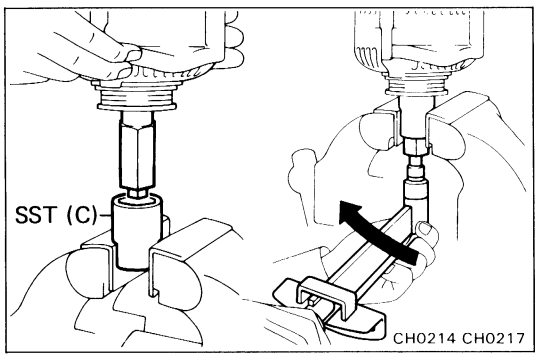

(d) As shown in the illustration, mount SST (C) in a vise, and install the alternator to SST (C).

(e) To torque the pulley nut, turn SST (A) in the direction shown in the illustration.

Torque: 1,125 kg-cm (81 ft-lb, 110 N·m)

(f) Remove the alternator from SST (C) .

(g) Turn SST (B) and remove SST (A and B).

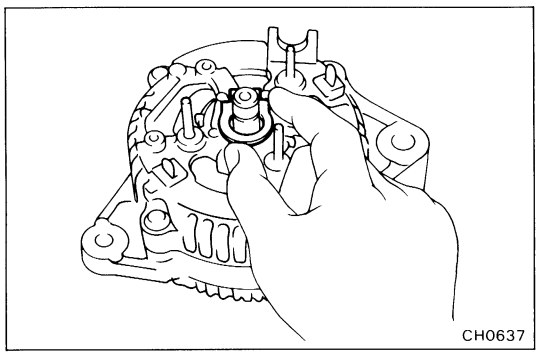

5. [7M-GE (A/T) and 7M-GTE]
PLACE SEAL PLATE ON RECTIFIER END FRAME

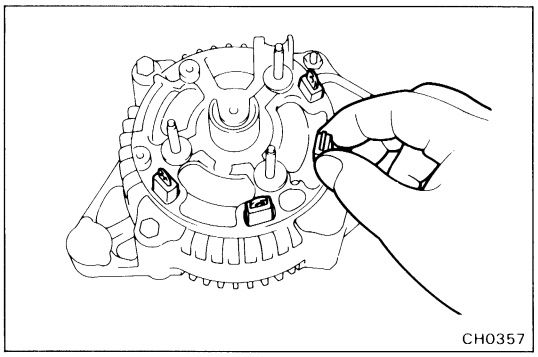

6. INSTALL RECTIFIER HOLDER

(a) Install the four rubber insulators on the lead wires.

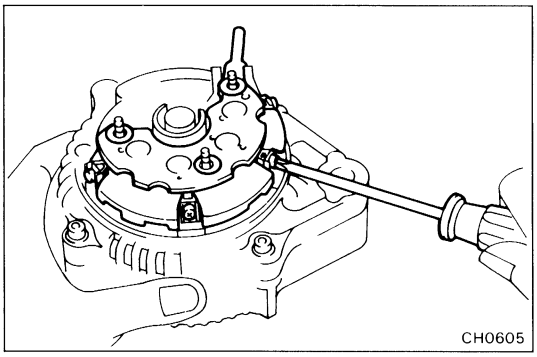

(b) Install the rectifier holder with the four screws.

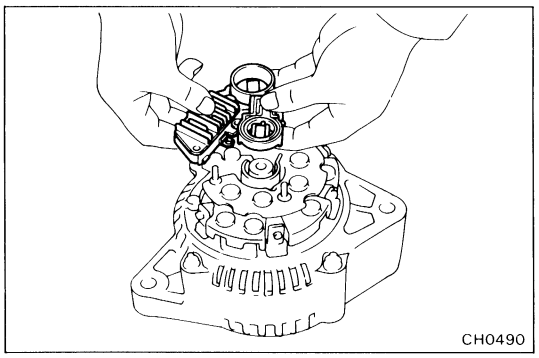

7. INSTALL IC REGULATOR AND BRUSH HOLDER [7M-GE (M/T)]

(a) Install the brush holder cover to the brush holder.

(b) Install the IC regulator together with the brush holder to the rectifier end frame horizontally as shown in the illustration.

HINT: Check that the brush holder's cover doesn't slip to one side during installation.

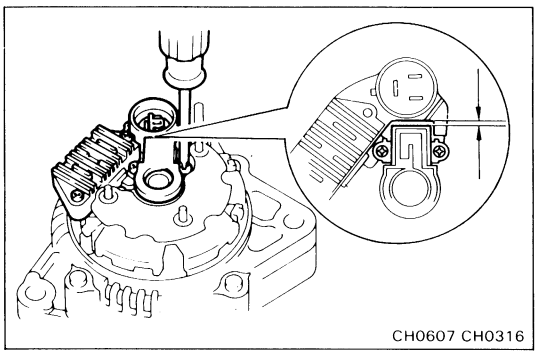

(c) Install the five screws until there is a clearance of at least 1 mm (0.04 in.) between the brush holder cover and connector.

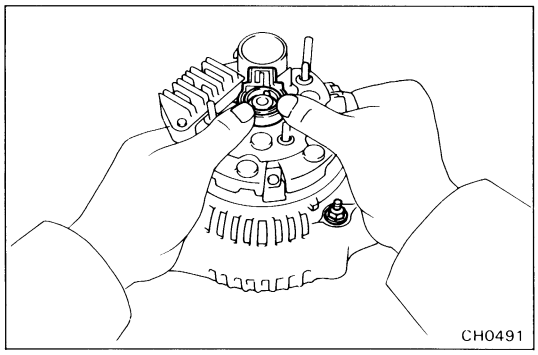

(d) Fit the brush holder cover.

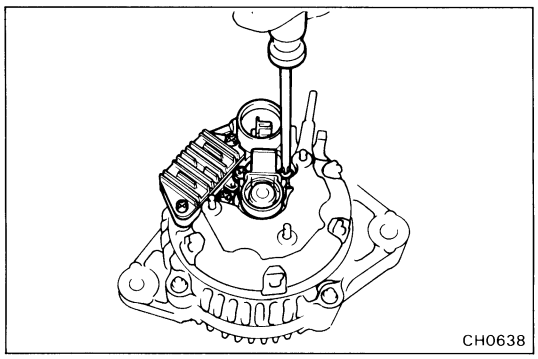

[7M-GE (A/T) and 7M-GTE]

(a) Install the IC regulator and brush holder with the five screws.

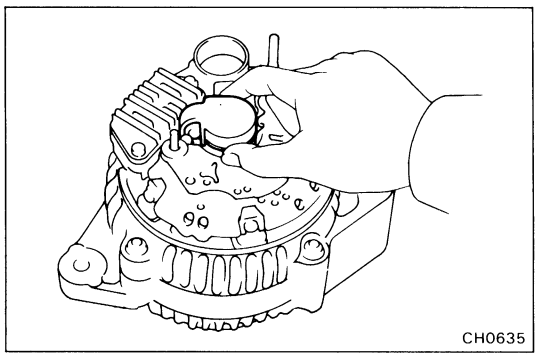

(b) Place the brush holder cover on the brush holder.

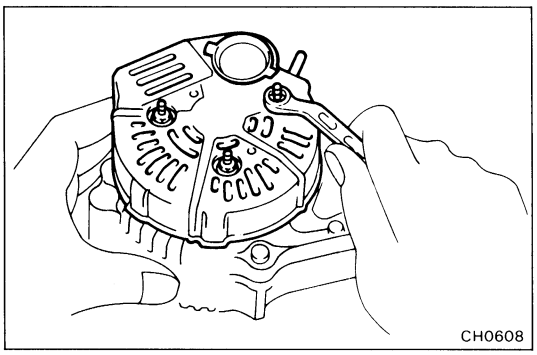

8. INSTALL REAR END COVER

(a) Install the rear end cover with the three nuts.

(b) Install the terminal insulator with the nut.

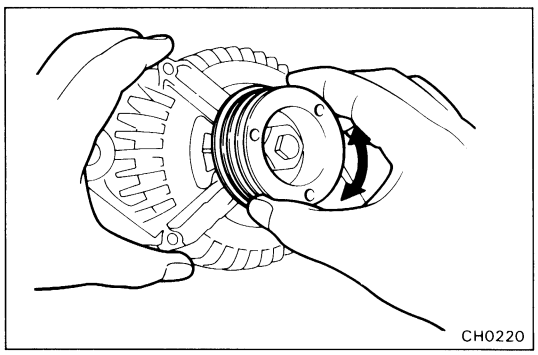

9. CHECK THAT ROTOR ROTATES SMOOTHLY

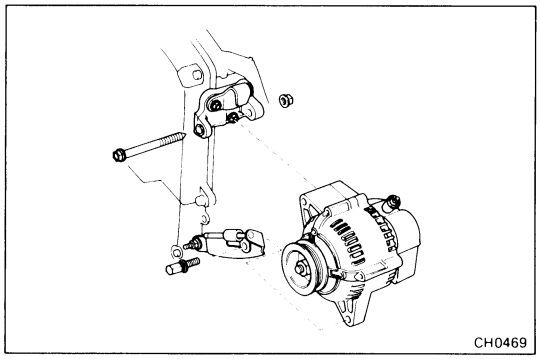

INSTALLATION OF ALTERNATOR

1. INSTALL ALTERNATOR

Mount the alternator on the engine bracket with the pivot bolt, nut and adjusting lock bolt. Do not tighten the bolts.

2. INSTALL DRIVE BELT

(a) Install the drive belt.

(b) Using a belt tension gauge, check the drive belt tension.

Belt tension gauge:

Nippondenso	**BTG-20 (95506-00020) or**
Borroughs	**No. BT-33-73F**

Drive belt tension:

New belt	**175 ± 5 lb**
Used belt	**115 ± 20 lb**

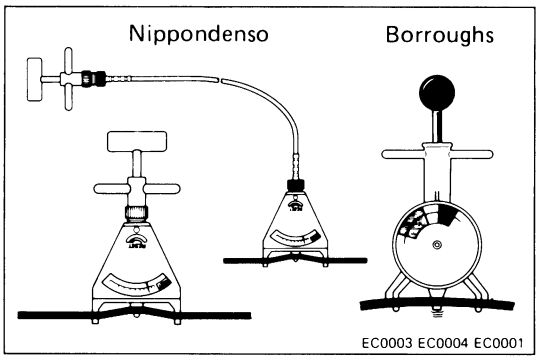

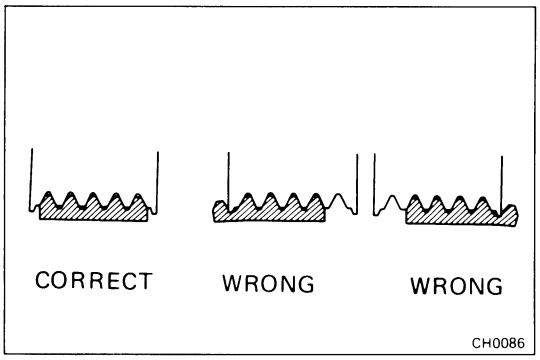

HINT:

- ''New belt'' refers to a belt which has been used less than 5 minutes on a running engine.
- ''Used belt'' refers to a belt which has been used on a running engine for 5 minutes or more.
- After installing the drive belt, check that it fits properly in the ribbed grooves. Check with your hand to confirm that the belt has not slipped out of the groove on the bottom of the crack pulley.
- After installing a new belt, run the engine for about 5 minutes and then recheck the tension.

(c) Tighten the pivot and adjusting lock bolts.

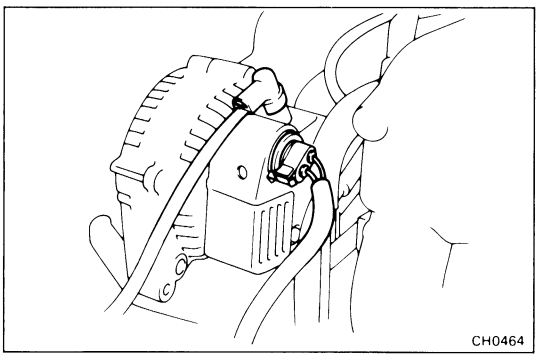

3. CONNECT WIRING TO ALTERNATOR

(a) Connect the wire to the alternator with the nut.

(b) Connect the connector to the alternator.

4. CONNECT NEGATIVE CABLE TO BATTERY

5. PERFORM ON-VEHICLE INSPECTION

(See pages CH-2 to 5)

CLUTCH

	Page
TROUBLESHOOTING	CL-2
CHECK AND ADJUSTMENT OF CLUTCH PEDAL	CL-3
BLEEDING OF CLUTCH SYSTEM	CL-4
INSPECTION OF CLUTCH START SYSTEM	CL-4
CLUTCH MASTER CYLINDER	CL-6
CLUTCH RELEASE CYLINDER	CL-8
CLUTCH UNIT	CL-11

TROUBLESHOOTING

Problem	Possible cause	Remedy	Page
Hard to shift or will not shift	Clutch pedal freeplay excessive	Adjust pedal freeplay	CL-3
	Air in clutch lines	Bleed clutch system	CL-4
	Clutch release cylinder faulty	Repair release cylinder	CL-8
	Clutch master cylinder faulty	Repair master cylinder	CL-6
	Clutch disc out of true, runout is excessive or lining broken	Inspect clutch disc	CL-11
	Splines on input shaft or clutch disc dirty or burred	Repair as necessary	CL-11
	Clutch pressure plate faulty	Replace clutch cover	CL-11
Transmission jumps out of gear	Clutch pilot bearing worn	Replace pilot bearing	CL-11
Clutch slips	Clutch pedal freeplay insufficient	Adjust pedal freeplay	CL-3
	Clutch disc lining oily or worn out	Inspect clutch disc	CL-11
	Pressure plate faulty	Replace clutch cover	CL-11
	Release fork binding	Inspect release fork	CL-11
Clutch grabs/ chatters	Clutch disc lining oily or worn out	Inspect clutch disc	CL-11
	Pressure plate faulty	Replace clutch cover	CL-11
	Clutch diaphragm spring bent	Align clutch diaphragm	CL-11
	Engine mounts loose	Repair as necessary	
Clutch pedal spongy	Air in clutch lines	Bleed clutch system	CL-4
	Clutch release cylinder faulty	Repair release cylinder	CL-8
	Clutch master cylinder faulty	Repair master cylinder	CL-6
Clutch noisy	Loose part inside housing	Repair as necessary	
	Release bearing worn or dirty	Replace release bearing	CL-11
	Pilot bearing worn	Replace pilot bearing	CL-11

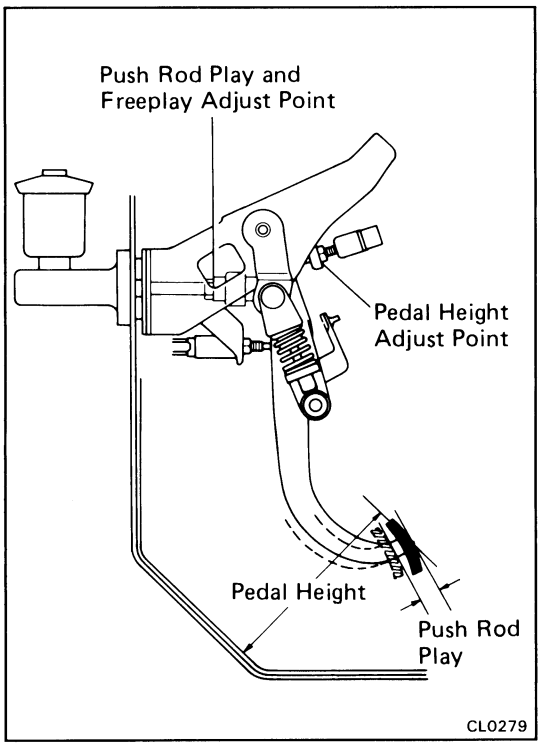

CHECK AND ADJUSTMENT OF CLUTCH PEDAL

1. CHECK THAT PEDAL HEIGHT IS CORRECT

Pedal height from asphalt sheet: 157 — 167 mm (6.18 — 6.57 in.)

2. IF NECESSARY, ADJUST PEDAL HEIGHT

(a) Loosen the lock nut and turn the adjusting bolt until the height is correct.

(b) Tighten the lock nut.

(c) After adjusting the pedal height, check the pedal freeplay.

3. CHECK THAT PEDAL FREEPLAY IS CORRECT AS SPECIFIED

Push in on the pedal until the beginning of clutch resistance is felt.

Pedal freeplay: 5 — 15 mm (0.20 — 0.59 in.)

Push rod play at pedal: 1 — 5 mm (0.04 — 0.20 in.)

4. IF NECESSARY, ADJUST PEDAL FREEPLAY

(a) Loosen the lock nut and turn the push rod until the freeplay is correct.

(b) Tighten the lock nut.

(c) After adjusting the pedal freeplay, check the pedal height.

5. CHECK PEDAL OPERATION

While gently depressing the pedal, check that engagement and disengagement are smooth.

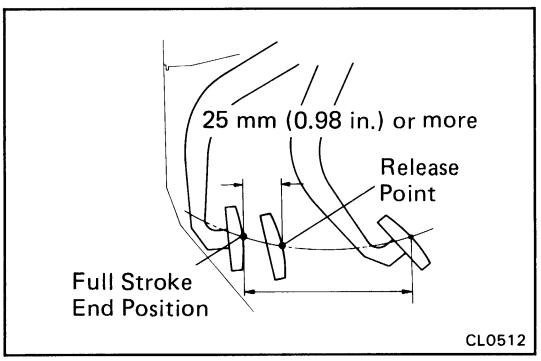

6. INSPECT CLUTCH RELEASE POINT

(a) Pull the parking brake lever and install wheel stopper.

(b) Start the engine and idle the engine.

(c) Without depressing the clutch pedal, slowly shift the shift lever into reverse position until the gears contact.

(d) Gradually depress the clutch pedal and measure the stroke distance from the point the gear noise stops (release point) up to the full stroke end position.

Standard distance: 25 mm (0.98 in.) or more (From pedal stroke end position to release point)

If clearance is not as specified, perform the following operation.

- Inspect pedal height.
- Inspect push rod play and pedal free play.
- Bleed the clutch line.
- Inspect the clutch cover and disc.

BLEEDING OF CLUTCH SYSTEM

HINT: If any work is done on the clutch system or if air is suspected in the clutch lines, bleed the system of air.

NOTICE: Do not let brake fluid remain on a painted surface. Wash it off immediately.

1. FILL CLUTCH RESERVOIR WITH BRAKE FLUID

Check the reservoir frequently. Add fluid if necessary.

2. CONNECT VINYL TUBE TO BLEEDER PLUG

Insert the other end of the tube in a half-full container of brake fluid.

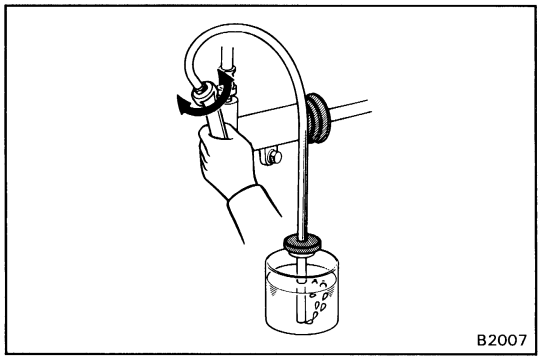

3. BLEED CLUTCH LINE

(a) Slowly pump the clutch pedal several times.

(b) While depressing the pedal, loosen the bleeder plug until the fluid starts to run out. Then close the bleeder plug.

(c) Repeat this procedure until there are no bubbles in the fluid.

HINT: Do not reuse the fluid that was bled. It contains air.

INSPECTION OF CLUTCH START SYSTEM

CHECK CLUTCH PEDAL

1. CHECK THAT PEDAL HEIGHT IS CORRECT
(See page CL-3)

2. CHECK THAT PEDAL FREEPLAY AND PUSH ROD PLAY ARE CORRECT
(See page CL-3)

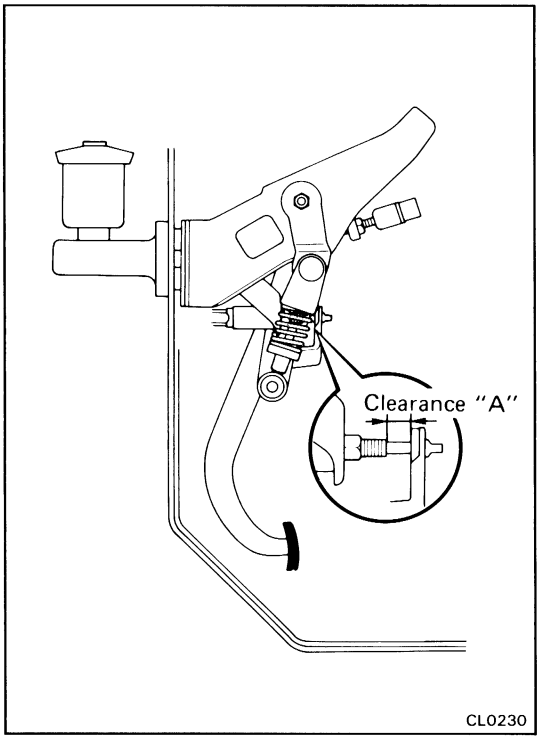

CHECK CLUTCH START SYSTEM

CHECK CLUTCH START SYSTEM

(a) Check that the engine does not start when the clutch pedal is released.

(b) Check that the engine starts when the clutch pedal is fully depressed.

(c) Check that clearance "A" is greater than 1 mm (0.04 in.) when the clutch pedal is fully depressed.

If necessary, adjust or replace the clutch start switch.

INSPECTION AND ADJUSTMENT OF CLUTCH START SWITCH

1. INSPECT CONTINUITY OF CLUTCH START SWITCH

(a) Check that there is continuity between terminals when the switch is ON (pushed).

(b) Check that there is no continuity between terminals when the switch is OFF (free).

If continuity is not as specified, replace the switch.

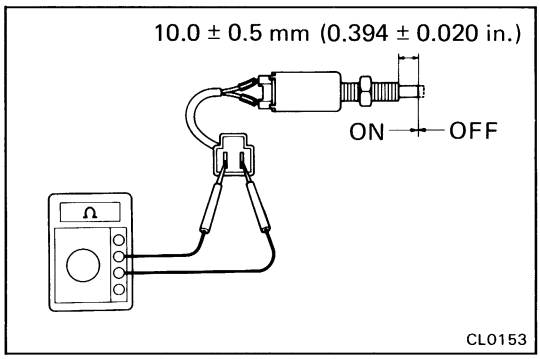

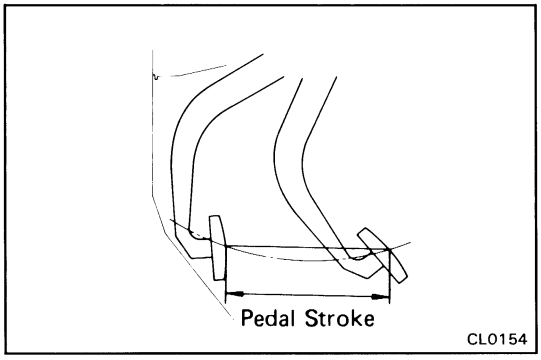

2. ADJUST CLUTCH START SWITCH

(a) Measure the pedal stroke, and check the switch clearance "A" using the chart left.

(b) Loosen and adjust the switch position.

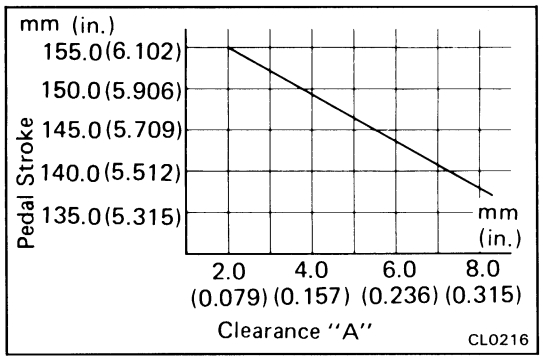

(c) Recheck that the engine does not start when the clutch pedal is released.

CLUTCH MASTER CYLINDER

COMPONENTS

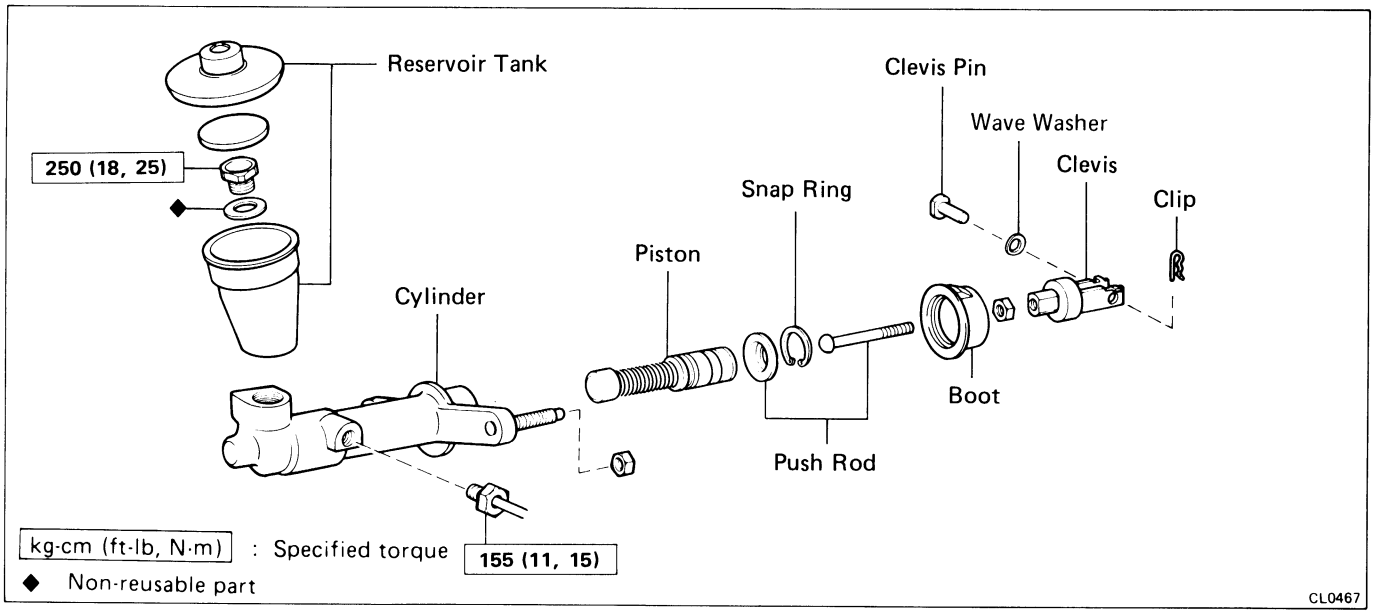

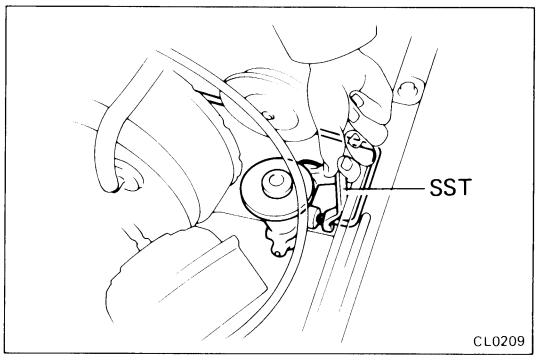

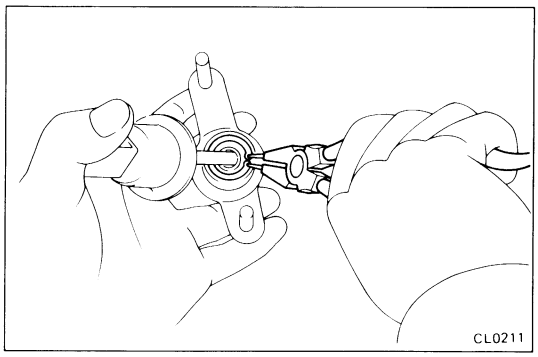

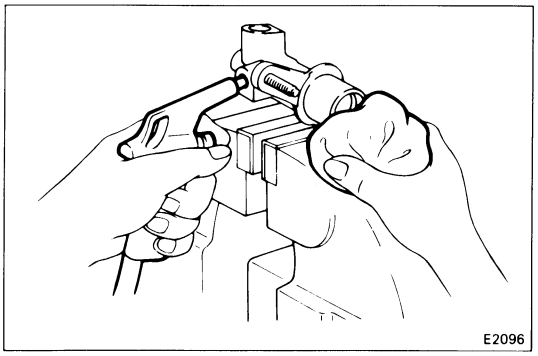

REMOVAL OF MASTER CYLINDER

1. **DRAW OUT FLUID WITH SYRINGE**
2. **DISCONNECT CLUTCH LINE UNION**
   Using SST, disconnect the union nut.
   SST 09751-36011
3. **REMOVE INSTRUMENT LOWER FINISH PANEL AND AIR DUCT**
4. **REMOVE CLIP, CLEVIS PIN AND SPRING WASHER**
5. **REMOVE MOUNTING NUTS AND PULL OUT MASTER CYLINDER**

DISASSEMBLY OF MASTER CYLINDER

1. **REMOVE RESERVOIR TANK**
   Remove the hold-down bolt and pull off the reservoir tank.
2. **REMOVE PUSH ROD**
   (a) Pull back the boot, and using a screwdriver, remove the snap ring.
   (b) Pull out the push rod assembly.
3. **REMOVE PISTON**
   Using compressed air, remove the piston from the cylinder.

INSPECTION OF MASTER CYLINDER

HINT: Clean the disassembled parts with compressed air.

1. **INSPECT MASTER CYLINDER BORE FOR SCORING OR CORROSION**

   If a problem is found, clean or replace the cylinder.

2. **INSPECT PISTON AND CUPS FOR WEAR, SCORING, CRACKS OR SWELLING**

   If either one requires replacement, use the parts from the cylinder kit.

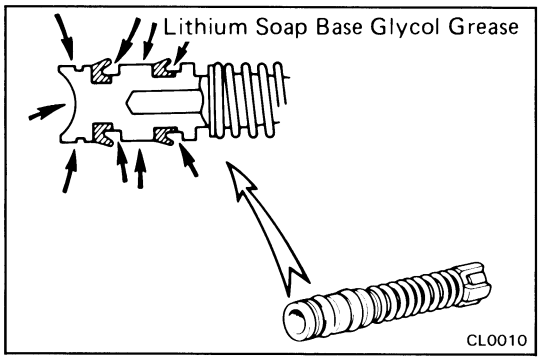

3. **INSPECT PUSH ROD FOR WEAR OR DAMAGE**

   If necessary, replace the push rod.

ASSEMBLY OF MASTER CYLINDER

(See page CL-6)

1. **COAT PARTS WITH LITHIUM SOAP BASE GLYCOL GREASE, AS SHOWN**

2. **INSERT PISTON INTO CYLINDER**

3. **INSTALL PUSH ROD ASSEMBLY WITH SNAP RING**

4. **INSTALL RESERVOIR TANK**

   Torque: 250 kg-cm (18 ft-lb, 25 N·m)

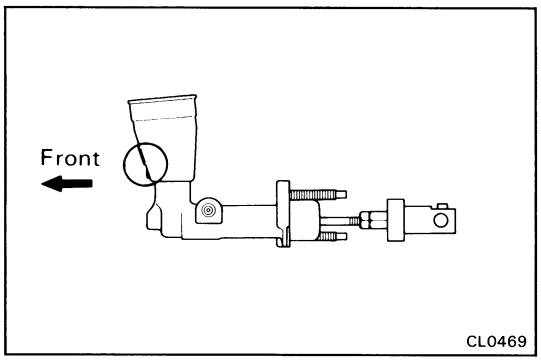

INSTALLATION OF MASTER CYLINDER

(See page CL-6)

1. **POSITION MASTER CYLINDER AND CONNECT CLUTCH LINE UNION**

   First finger-tighten the union nut and then tighten it to specified torque with SST.

   SST 09751-36011

   Torque: 155 kg-cm (11 ft-lb, 15 N·m)

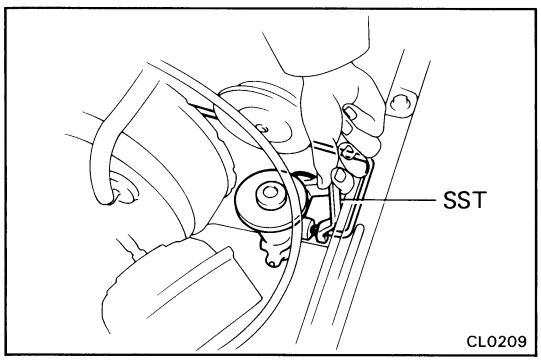

2. **INSTALL AND TIGHTEN MOUNTING NUTS**

3. **INSTALL PUSH ROD ASSEMBLY TO CLUTCH PEDAL**

   Secure the clevis pin with the spring washer and clip.

4. **BLEED CLUTCH SYSTEM**
   (See page CL-4)

5. **CHECK FOR LEAKS**

6. **CHECK AND ADJUST CLUTCH PEDAL**
   (See page CL-3)

7. **INSTALL INSTRUMENT LOWER FINISH PANEL AND AIR DUCT**

CLUTCH RELEASE CYLINDER

COMPONENTS

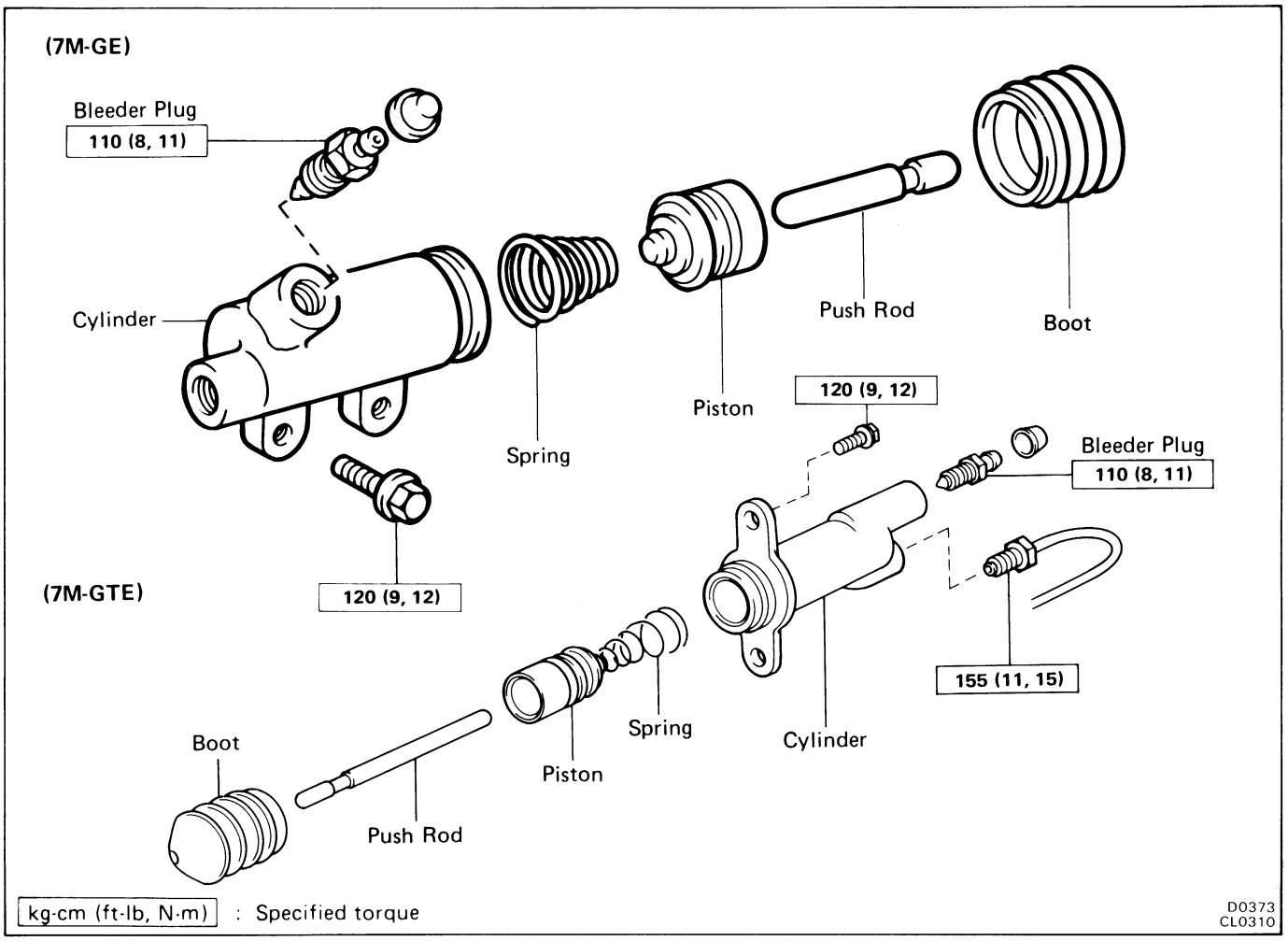

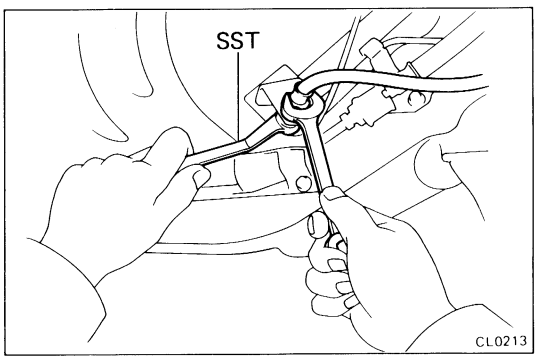

REMOVAL OF RELEASE CYLINDER

(7M-GE)

1. REMOVE FLEXIBLE HOSE

(a) Using SST, disconnect the union.

SST 09751-36011

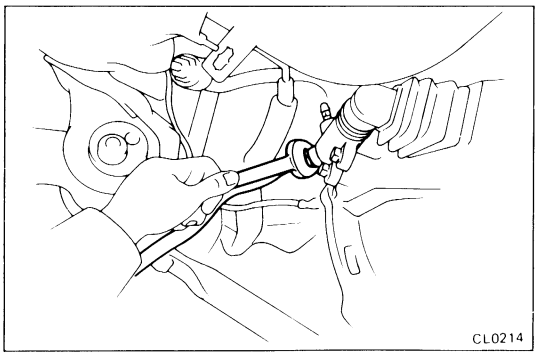

(b) Remove the flexible hose from the release cylinder.

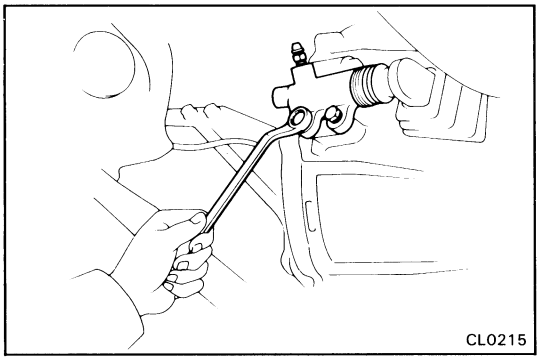

2. REMOVE RELEASE CYLINDER

Remove the two bolts and pull out the release cylinder.

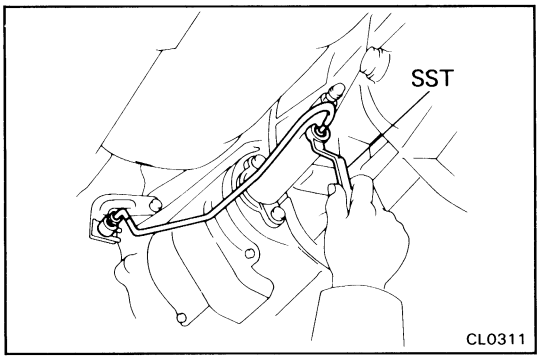

(7M-GTE)

1. REMOVE CLUTCH LINE TUBE

Using SST, disconnect the two union nuts and remove the clutch line tube.

SST 09751-36011

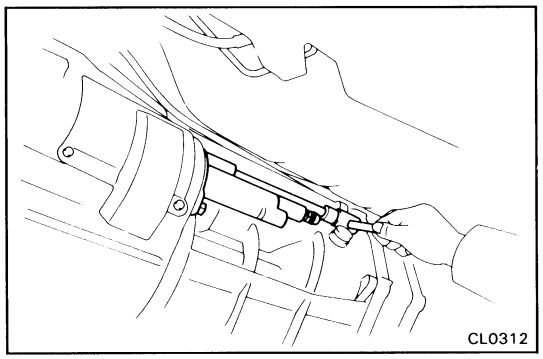

2. REMOVE RELEASE CYLINDER

Remove the two bolts and pull out the release cylinder.

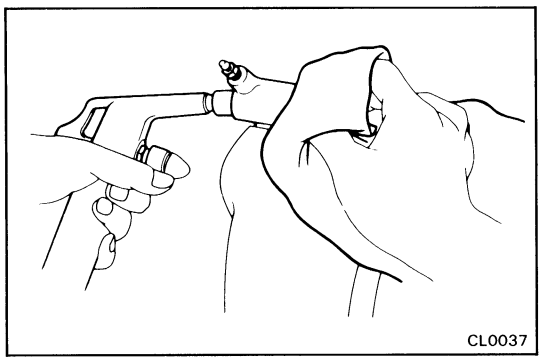

DISASSEMBLY OF RELEASE CYLINDER

(See page CL-8)

1. PULL OUT PUSH ROD WITH BOOT

2. REMOVE PISTON WITH SPRING

Using compressed air, remove the piston with spring.

INSPECTION OF RELEASE CYLINDER

HINT: Clean the disassembled parts with compressed air.

1. INSPECT RELEASE CYLINDER BORE FOR SCORING OR CORROSION

If a problem is found, clean or replace the cylinder.

2. INSPECT PISTON AND CUPS FOR WEAR, SCORING, CRACKS OR SWELLING

If either one requires replacement, use the parts from the cylinder kit.

3. INSPECT PUSH ROD FOR WEAR OR DAMAGE

If necessary, replace the push rod.

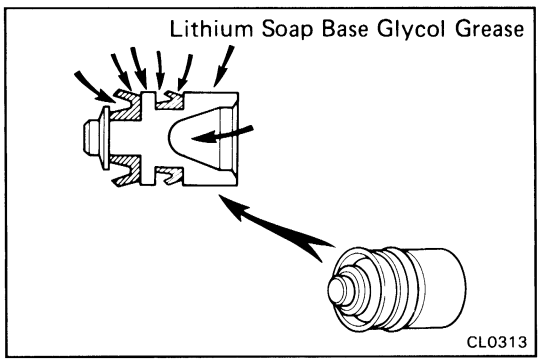

ASSEMBLY OF RELEASE CYLINDER

(See page CL-8)

1. **COAT PISTON WITH LITHIUM SOAP BASE GLYCOL GREASE, AS SHOWN**
2. **INSERT PISTON WITH SPRING INTO CYLINDER**
3. **INSTALL PUSH ROD WITH BOOT**

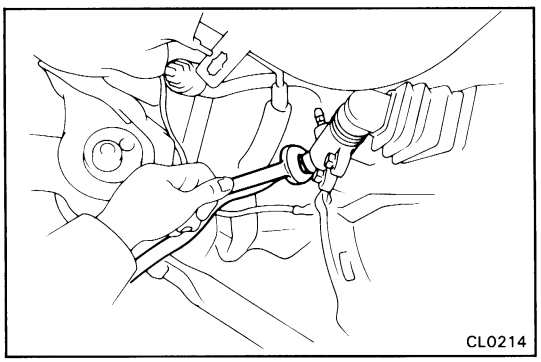

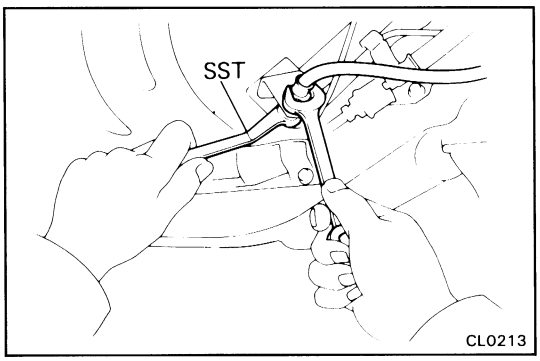

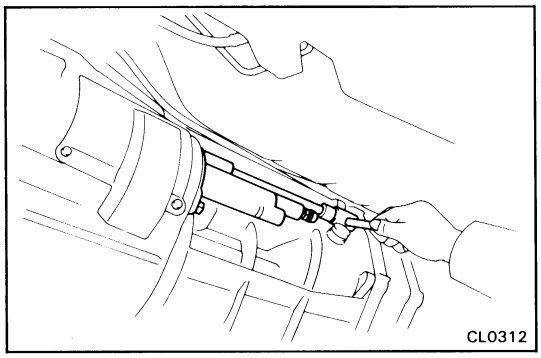

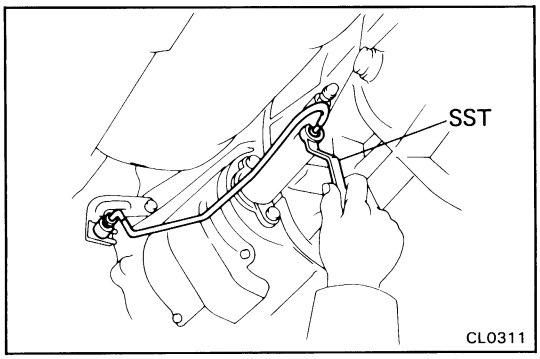

INSTALLATION OF CLUTCH RELEASE CYLINDER

(7M-GE)

1. **INSTALL RELEASE CYLINDER WITH TWO BOLTS**

   Torque: 120 kg-cm (9 ft-lb, 12 N·m)

2. **INSTALL FLEXIBLE HOSE**

   (a) Install and torque the flexible hose to the release cylinder.

   Torque: 235 kg-cm (17 ft-lb, 23 N·m)

   (b) Using SST, connect and torque the clutch line union to the flexible hose.

   HINT: First, finger-tighten and then tighten to specified torque.

   SST 09751-36011

   Torque: 155 kg-cm (11 ft-lb, 15 N·m)

   (c) Install the clip.

3. **BLEED CLUTCH SYSTEM**
   (See page CL-4)

4. **CHECK FOR LEAKS**

(7M-GTE)

1. **INSTALL RELEASE CYLINDER WITH TWO BOLTS**

   Torque: 120 kg-cmn (9 ft-lb, 12 N·m)

2. **INSTALL CLUTCH LINE TUBE**

   Using SST, connect the clutch line tube.

   HINT: First finger-tighten the union nut and then tighten it to specified torque.

   SST 09751-36011

   Torque: 155 kg-cm (11 ft-lb, 15 N·m)

3. **BLEED CLUTCH SYSTEM**
   (See page CL-4)

4. **CHECK FOR LEAKS**

CLUTCH UNIT

COMPONENTS

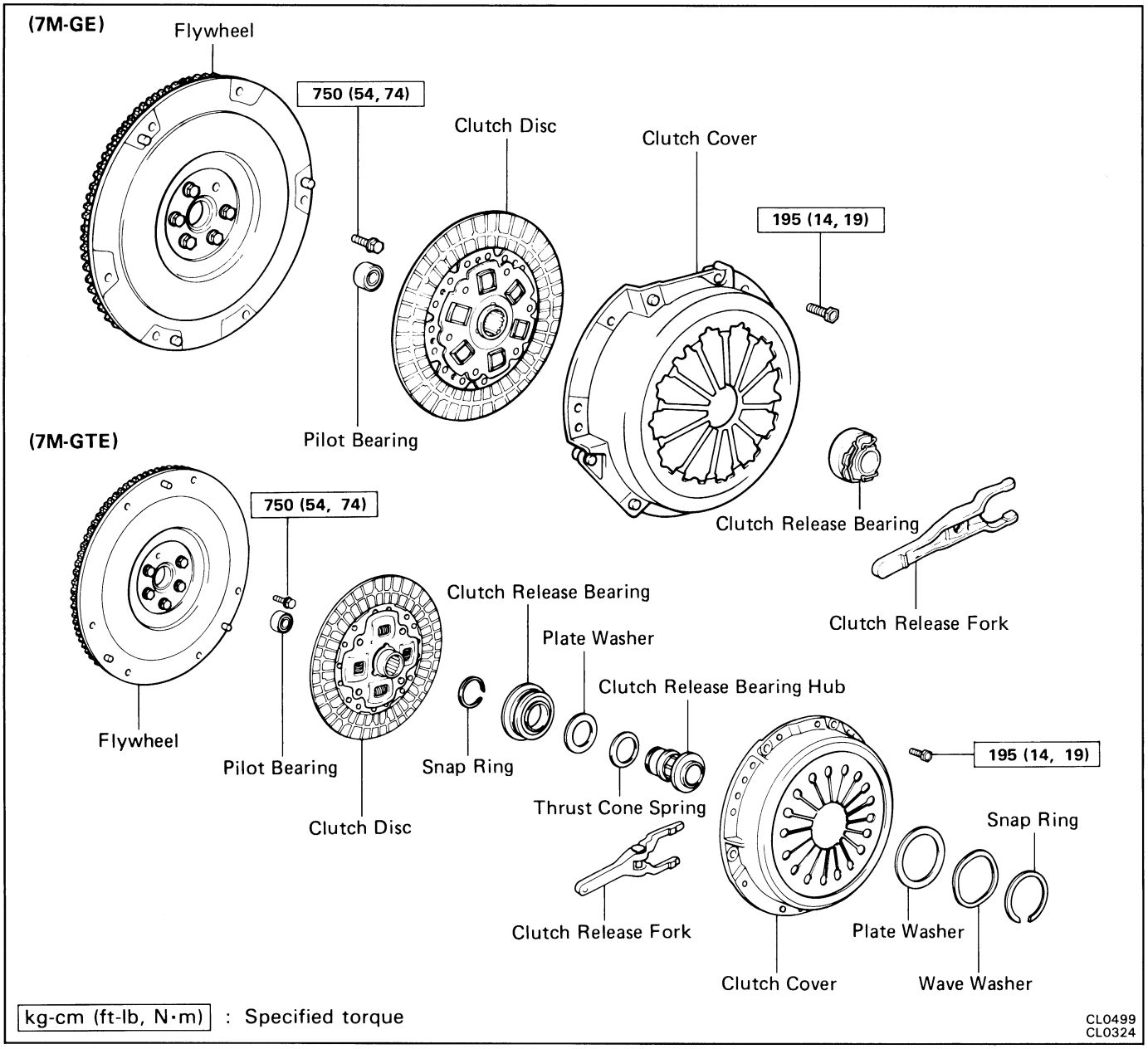

REMOVAL OF CLUTCH UNIT

(7M-GE)

1. **REMOVE TRANSMISSION**
   (See page MT-4)

   HINT: Do not drain the transmission oil.

2. **REMOVE CLUTCH COVER AND DISC**

   (a) Place the matchmarks on the clutch cover and flywheel.

   (b) Loosen each set bolt one turn at a time until spring tension is released.

   (c) Remove the set blots and pull off the clutch cover and disc.

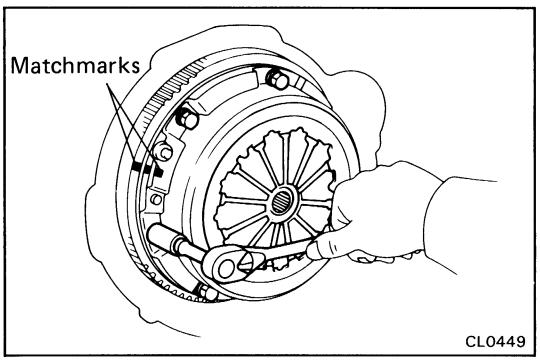

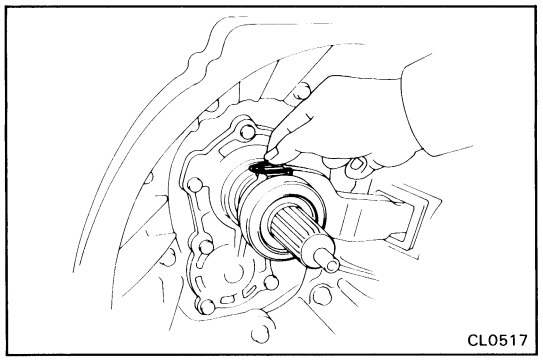

3. REMOVE RELEASE BEARING, FORK AND BOOT FROM TRANSMISSION

(a) Remove the clips, and pull off the bearing and hub.

(b) Remove the fork and boot.

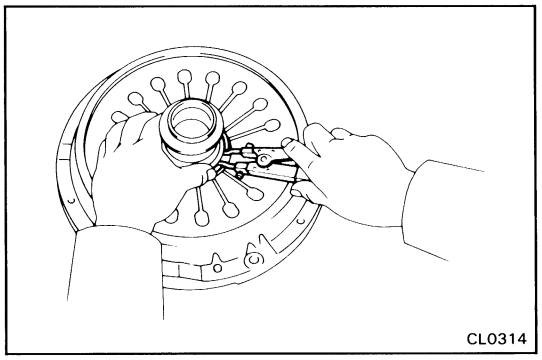

(7M-GTE)

1. REMOVE TRANSMISSION WITH CLUTCH COVER AND DISC
(See page MT-3)

2. REMOVE RELEASE BEARING HUB ASSEMBLY FROM CLUTCH COVER

(a) Using snap ring pliers, remove the snap ring.

(b) Remove the bearing hub assembly, wave washer and plate washer.

INSPECTION OF CLUTCH PARTS

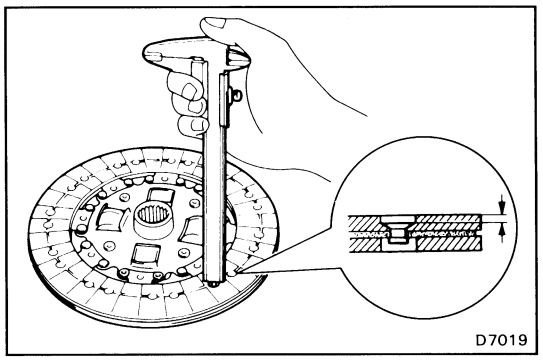

1. INSPECT CLUTCH DISC FOR WEAR OR DAMAGE

Using calipers, measure the rivet head depth.

Minimum rivet depth: 0.3 mm (0.012 in.)

If a problem is found, replace the clutch disc.

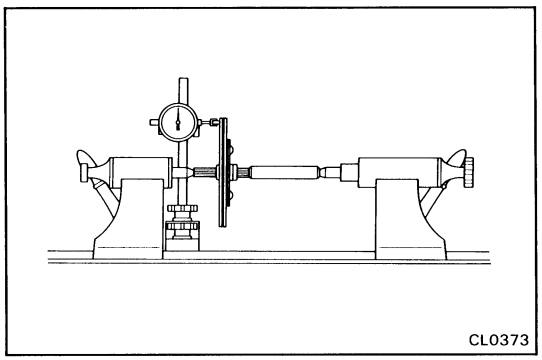

2. INSPECT CLUTCH DISC RUNOUT

Using a dial indicator, check the disc runout.

Maximum runout: 0.8 mm (0.031 in.)

If runout is excessive, replace the disc.

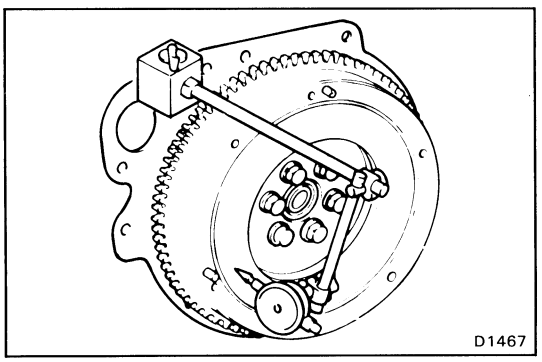

3. INSPECT FLYWHEEL RUNOUT

Using a dial indicator, check the flywheel runout.

Maximum runout: 0.2 mm (0.008 in.)

If runout is excessive, replace the flywheel.

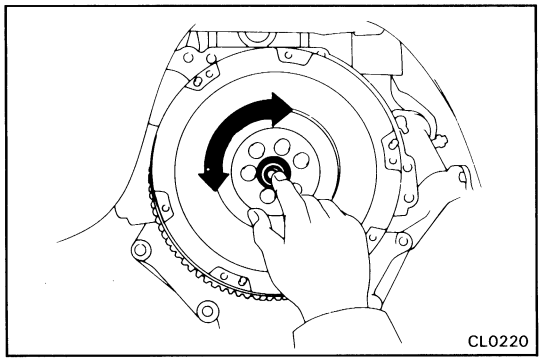

4. INSPECT PILOT BEARING

Turn the bearing by hand while applying force in the axial direction.

If the bearing sticks or has much resistance, replace the pilot bearing.

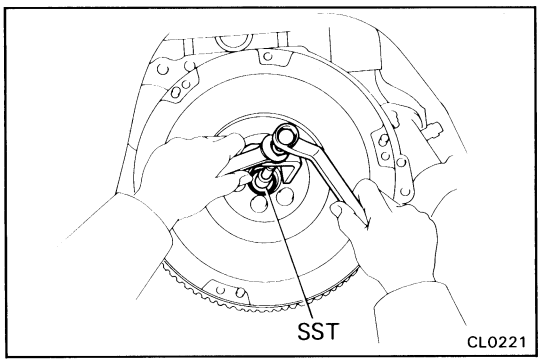

5. IF NECESSARY, REPLACE PILOT BEARING

(a) Using SST, remove the pilot bearing.

SST 09303-35011

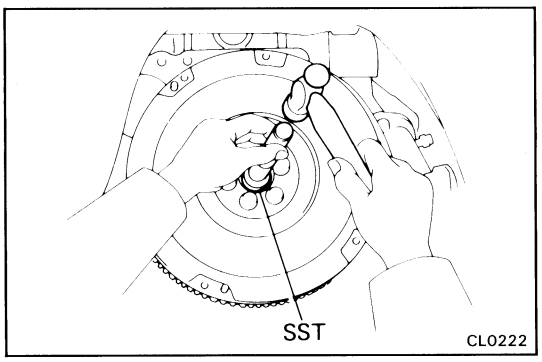

(b) Using SST, drive in a new pilot bearing.

SST 09304-30012

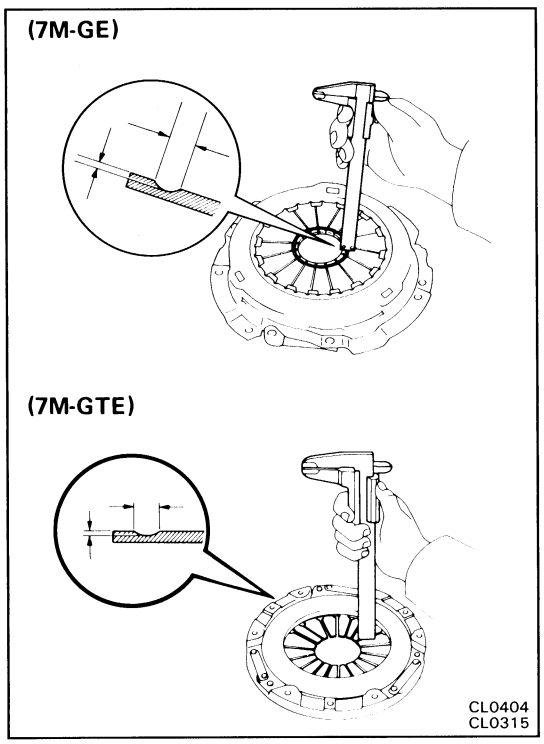

6. INSPECT DIAPHRAGM SPRING FOR WEAR

Using calipers, measure the diaphragm spring for depth and width of wear.

Limit: Depth 0.6 mm (0.024 in.)
Width 5.0 mm (0.197 in.)

If necessary, replace the clutch cover.

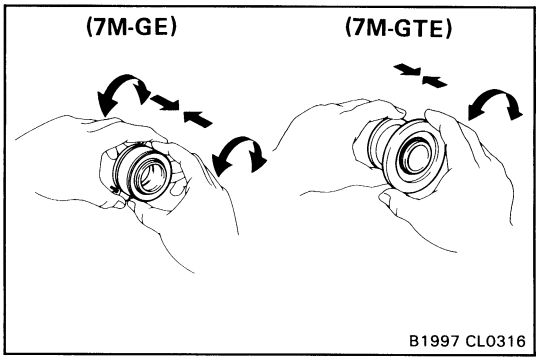

7. INSPECT RELEASE BEARING

Turn the bearing by hand while applying force in the axial direction.

If the bearing sticks or has much resistance, replace the release bearing.

HINT: The bearing is permanently lubricated and requires no cleaning or lubrication.

8. IF NECESSARY, REPLACE RELEASE BEARING
(7M-GE)

Replace release bearing assembly.

(7M-GTE)

(a) Using snap ring pliers, remove the snap ring.

(b) Remove the release bearing, plate washer and cone spring from the hub.

(c) Install the cone spring, plate washer and a new release bearing to the hub.

HINT: Make sure to install the cone spring in correct direction as shown in the figure.

(d) Using snap ring pliers, install the snap ring.

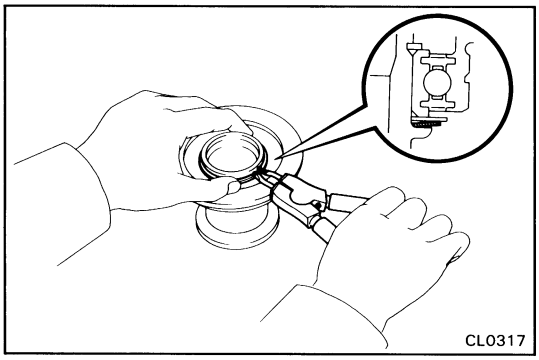

9. (7M-GTE)
CHECK DIAPHRAGM SPRING TIP ALIGNMENT

(a) Using SST, install the clutch disc on the flywheel.

SST 09301-20020

(b) Align the matchmarks on the clutch cover and flywheel.

(c) Torque the bolts on the clutch cover in the order shown.

Torque: 195 kg-cm (14 ft-lb, 19 N·m)

HINT: Temporarily tighten the No.1 and No.2 bolts.

(d) Using a dial indicator and measuring point,check the diaphragm spring tip alignment.

Maximum non-alignment: 0.5 mm (0.020 in.)

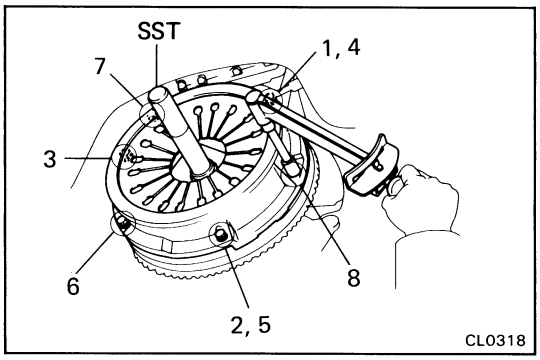

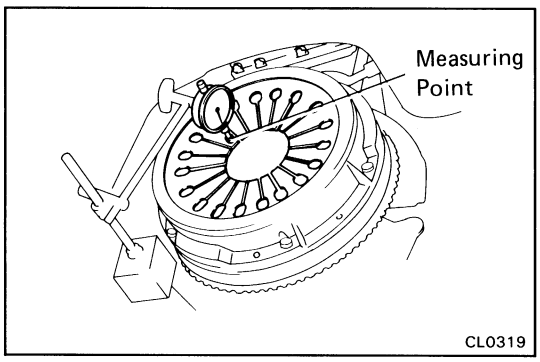

(e) If non-alignment is excessive, bend the springs with SST until alignment is correct.

SST 09333-00013

(f) Remove the clutch cover and disc.

HINT: Loosen each set bolt one turn at a time until spring tension is released.

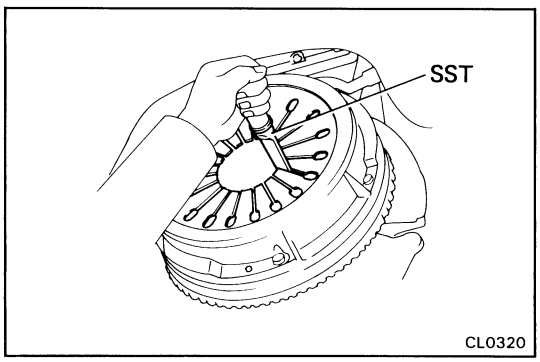

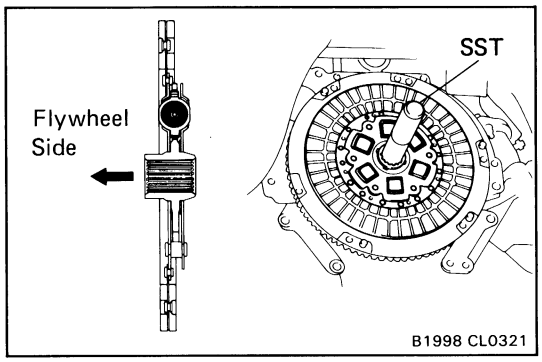

INSTALLATION OF CLUTCH UNIT

(See page CL-11)

(7M-GE)

1. INSTALL CLUTCH DISC ON FLYWHEEL

Using SST, install the disc on the flywheel.

SST 09301-20020

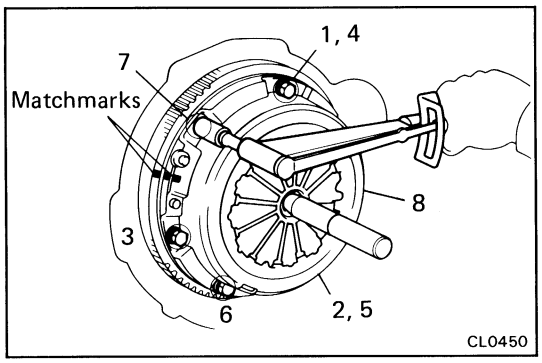

2. INSTALL CLUTCH COVER

(a) Align the matchmarks on the clutch cover and flywheel.

(b) Torque the bolts on the clutch cover in the order shown.

Torque: 195 kg-cm (14 ft-lb, 19 N·m)

HINT: Temporarily tighten the No.1 and No.2 bolts.

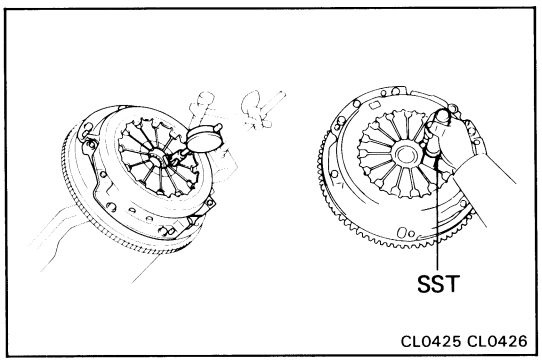

3. CHECK DIAPHRAGM SPRING TIP ALIGNMENT

Using a dial indicator with roller instrument, check the diaphragm spring tip alignment.

Maximum non-alignment: 0.5 mm (0.020 in.)

If alignment is not as specified, using SST, adjust the diaphragm spring tip alignment.

SST 09333-00013

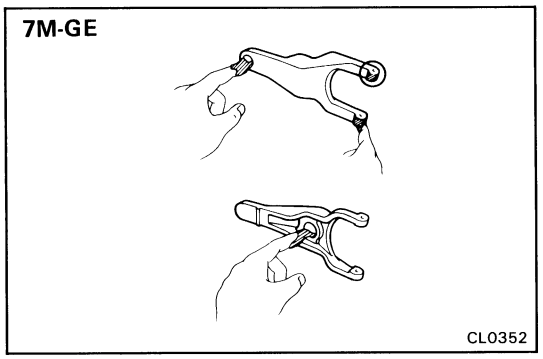

5. APPLY MOLYBDENUM DISULPHIDE LITHIUM BASE GREASE (NLGI NO. 2) OR MP GREASE

(a) Apply molybdenum disulphide lithium base grease to the following parts.

- Release fork and hub contact point
- Release fork and push rod contact point
- Release fork pivot point
- Clutch disc spline
- Release bearing hub inside groove

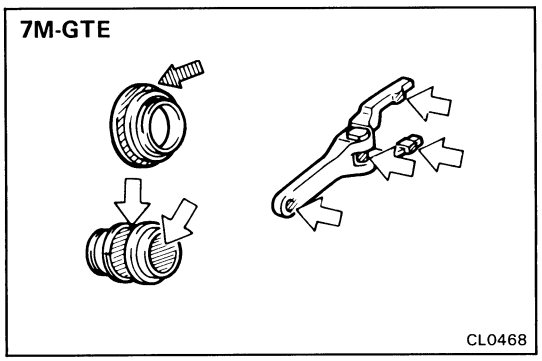

(b) Apply MP grease to the front surface of the release bearing.

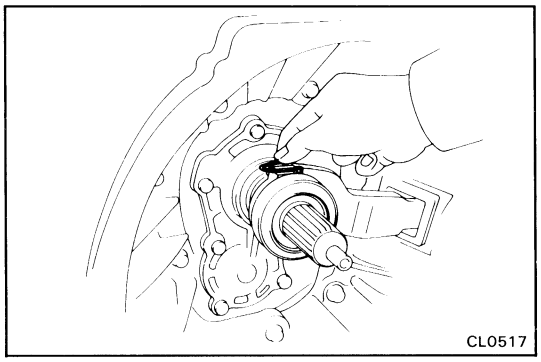

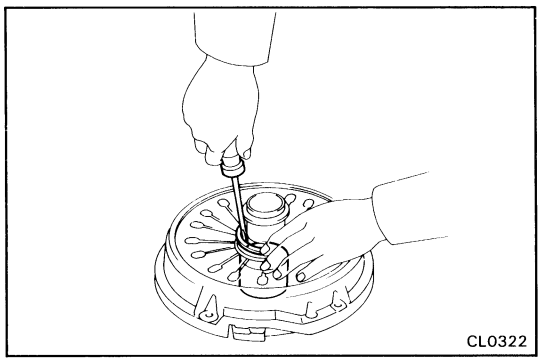

6. INSTALL BOOT, FORK AND RELEASE BEARING TO TRANSMISSION

7. INSTALL TRANSMISSION
(See page MT-6)

(7M-GTE)

1. INSTALL RELEASE BEARING HUB ASSEMBLY TO CLUTCH COVER

(a) Apply MP grease to the release bearing contact surface.

(b) Install the plate washer, wave washer and bearing hub assembly.

(c) Using a screwdriver, install the snap ring.

HINT: Support the release bearing under with a spacer or such to raise the bearing hub assembly.

2. INSTALL TRANSMISSION WITH CLUTCH COVER AND DISC
(See page MT-6)

MANUAL TRANSMISSION

	Page
DESCRIPTION	MT-2
PRECAUTIONS	MT-3
TROUBLESHOOTING	MT-3
REMOVAL AND INSTALLATION OF TRANSMISSION	MT-4
Removal of Transmission	MT-4
Installation of Transmission	MT-6
(W58 TRANSMISSION)	
Components	MT-9
DISASSEMBLY OF TRANSMISSION	MT-11
COMPONENT PARTS	MT-19
Input Shaft Assembly	MT-19
Output Shaft Assembly	MT-21
Counter Gear and Reverse Idler Gear	MT-28
Front Bearing Retainer	MT-33
Extension Housing	MT-34
ASSEMBLY OF TRANSMISSION	MT-37
(R154 TRANSMISSION)	
Components	MT-49
DISASSEMBLY OF TRANSMISSION	MT-51
COMPONENT PARTS	MT-59
Input Shaft Assembly	MT-59
Output Shaft Assembly	MT-61
Counter Gear and Reverse Idler Gear	MT-69
Front Bearing Retainer	MT-72
Extension Housing	MT-73
ASSEMBLY OF TRANSMISSION	MT-76

DESCRIPTION

Transmission

- Transmission types W58 and R154 are constant mesh synchronizers for forward gear and a sliding mesh reverse gear.

  The specifications and cross-section diagram are a shown.

W58

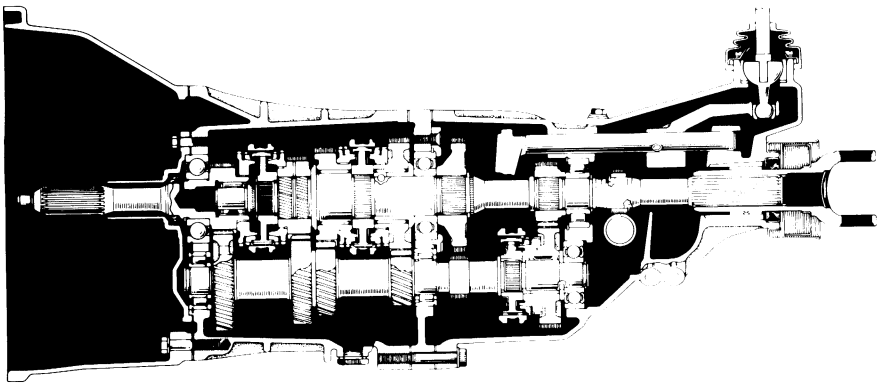

R154

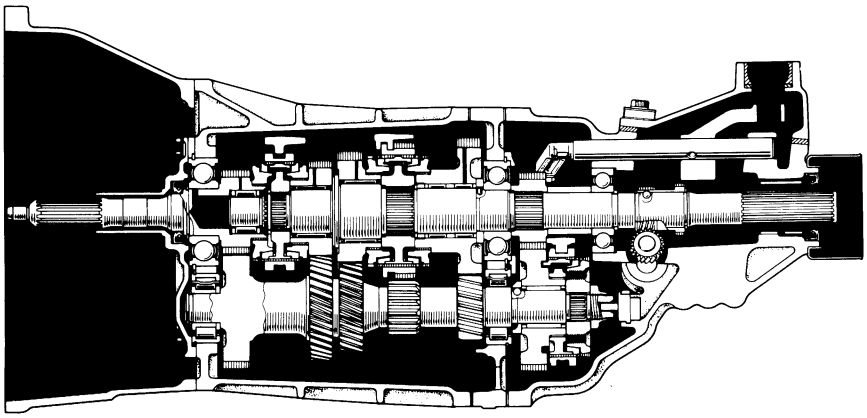

A3718
E9674

Specifications

Transmission Type / Type of Engine / Item		W58	R154
		7M-GE	7M-GTE
Gear Ratio	1st	3.285	3.251
	2nd	1.894	1.955
	3rd	1.275	1.310
	4th	1.000	1.000
	5th	0.783	0.753
	Reverse	3.768	3.180
Oil Capacity		2.4 liters (2.5 US qts., 2.1 Imp. qts)	3.0 liters (3.2 US qts., 2.6 Imp. qts)
Type of Oil		API GL-4 or GL-5 SAE 75W-90 or 80W-90	API GL-4 or GL-5 SAE 75W-90

PRECAUTIONS

When working with FIPG material, you must be observe the following.

- **Using a razor blade and gasket scraper, remove all the old packing(FIPG)material from the gasket surfaces.**
- **Thoroughly clean all components to remove all the loose material.**
- **Clean both sealing surfaces with a non-residue solvent.**
- **Apply the seal packing in approx. 1 mm (0.04 in.) bead along the sealing surface.**
- **Parts must be assembled within 10 minutes of application. Otherwise, the packing (FIPG) material must be removed and reapplied.**

TROUBLESHOOTING

Problem	Possible cause	Remedy	Page
Noise	Transmission faulty Wrong oil grade Oil level low	Disassemble and inspect transmission Replace oil Add oil	MT-4
Oil leakage	Oil level too high Oil seal, O-ring or gasket worn or damaged	Drain oil Replace oil seal, O-ring or gasket	MT-4
Hard to shift or will not shift	Spline on input shaft dirty or burred Transmission faulty	Repair as necessary Disassemble and inspect transmission	MT-4 MT-4
Jumps out of gear	Transmission faulty	Disassemble and inspect transmission	MT-4

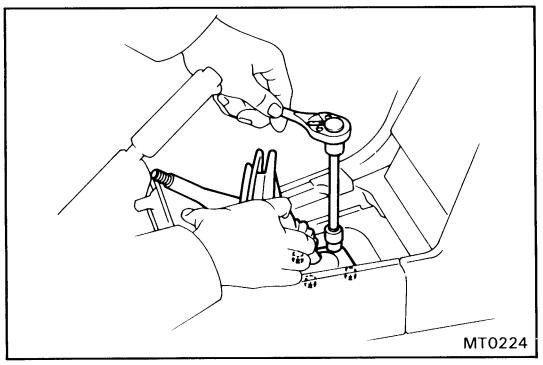

REMOVAL AND INSTALLATION OF TRANSMISSION

Removal of Transmission

1. **REMOVE NEGATIVE BATTERY CABLE**

   CAUTION: Work must be started after approx. 20 seconds or longer from the "LOCK" position and the negative (−) terminal cable is disconnected from the battery.

2. **REMOVE CENTER CLUSTER FINISH PANEL**

3. **REMOVE SHIFT LEVER FROM INSIDE OF VEHICLE**

4. **RAISE VEHICLE AND DRAIN TRANSMISSION OIL**

   NOTICE: Be sure the vehicle is securely supported.

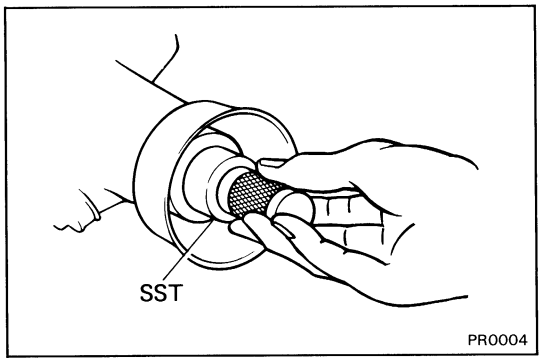

5. **REMOVE PROPELLER SHAFT**

   Remove the propeller shaft and insert SST into the extension housing.

   SST 09325-20010 (for W58 M/T)
   09325-40010 (for R154 M/T)

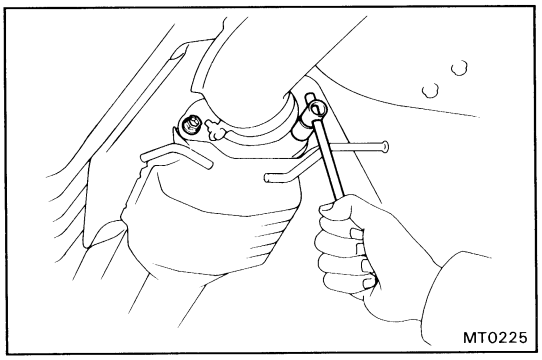

6. **DISCONNECT EXHAUST FRONT PIPE FROM TAIL PIPE**

   (a) Remove the rubber hanger.

   (b) Disconnect the pipe at the front side of the converter.

7. **(R154 M/T)**
   REMOVE EXHAUST FRONT PIPE

   (a) Disconnect the exhaust pipe bracket from the clutch housing.

   (b) Remove the nuts and exhaust pipe from the exhaust manifold.

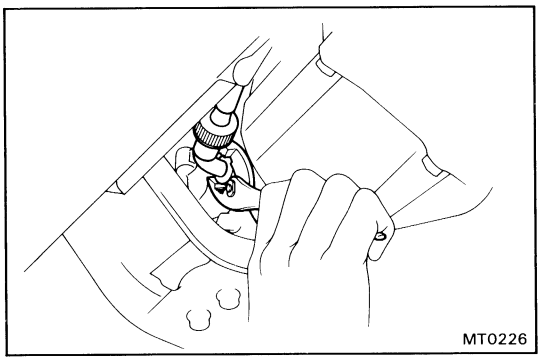

8. **DISCONNECT SPEEDOMETER CABLE**

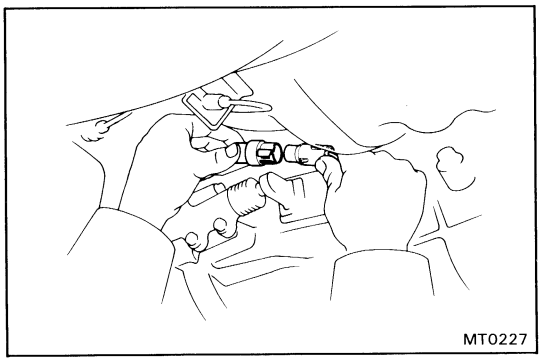

9. **DISCONNECT BACK-UP LIGHT SWITCH CONNECTOR AND REAR SPEED SENSOR CONNECTOR (w/ A.B.S.)**

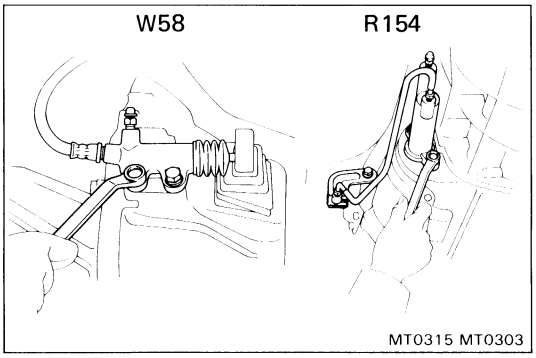

10. REMOVE CLUTCH RELEASE CYLINDER

11. REMOVE STARTER

Remove the mounting bolts and lay the starter alongside the engine.

12. JACK UP TRANSMISSION SLIGHTLY

Raise the transmission enough to remove the weight from the rear support.

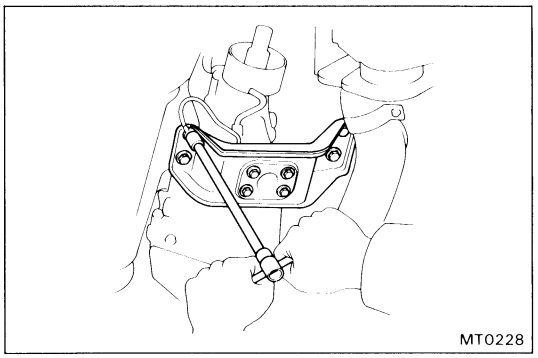

13. REMOVE ENGINE REAR MOUNTING

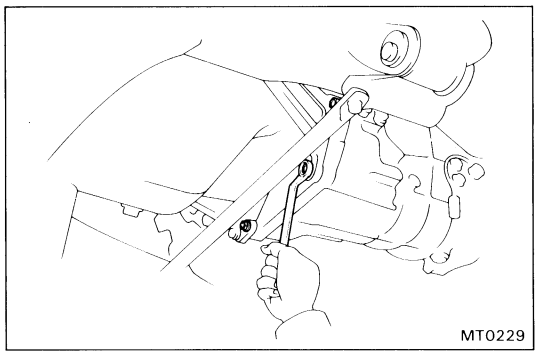

14. REMOVE TRANSMISSION MOUNTING BOLTS AND FLYWHEEL HOUSING UNDER COVER

15.-1 (W58 M/T)

REMOVE TRANSMISSION ASSEMBLY

Pull out the transmission down and toward the rear.

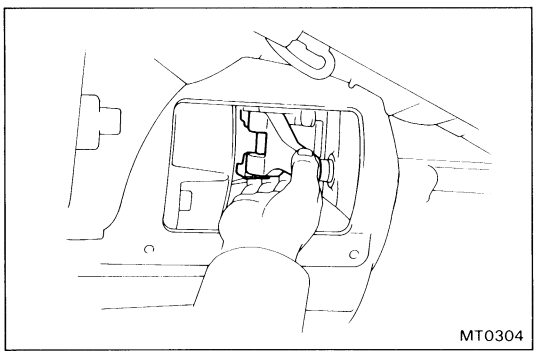

15.-2 (R154 M/T)

REMOVE TRANSMISSION ASSEMBLY WITH CLUTCH COVER AND DISC

(a) Remove the two clutch housing covers.

(b) Pull out the release fork through the left clutch housing hole.

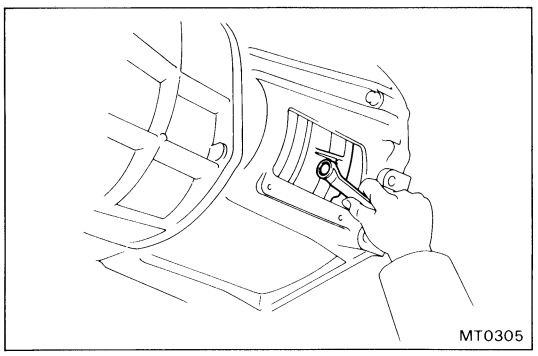

(c) Place the matchmarks on the clutch cover and flywheel.

(d) Remove the clutch cover set bolts while turning the crankshaft pulley.

HINT: Loosen each set bolt one turn at a time until spring tension is released.

(e) Remove the clutch cover and disc from the flywheel, and fully move them toward the transmission.

(f) Pull out the transmission with the clutch cover and disc.

Installation of Transmission

1-1. (R154)
PLACE TRANSMISSION AT INSTALLATION POSITION, AND INSTALL TRANSMISSION MOUNTING BOLTS

(a) Apply molybdenum disulphide lithium base grease to the following parts:
- Release bearing hub inside groove
- Input shaft spline
- Release fork contact surface

(b) Install the clutch cover and disc on the retainer and input shaft spline.

(c) Align the input shaft tip with the pilot bearing, and push the transmission fully into position.

(d) Install the two mounting bolts of the upper transmission, and torque the bolts.

Torque: 400 kg-cm (29 ft-lb, 39 N·m)

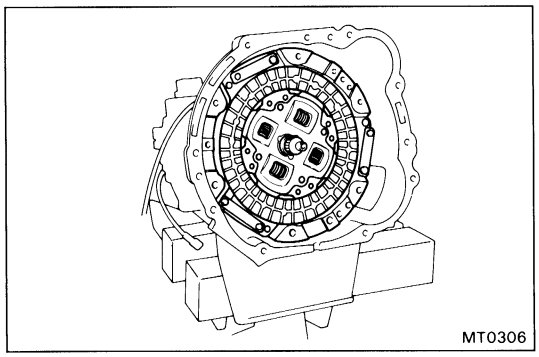
MT0306

(e) Align the matchmarks on the clutch cover and flywheel.

(f) Tighten the clutch cover set bolts evenly and gradually while turning the crankshaft pulley. Make several passes around the cover until the cover is snug. Torque the bolts.

Torque: 195 kg-cm (14 ft-lb, 19 N·m)

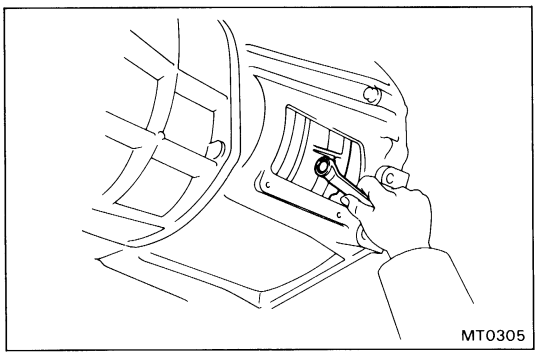
MT0305

(g) Install the release fork to the release fork support through the left clutch housing hole.

(h) Install the two clutch housing covers.

Torque: 120 kg-cm (9 ft-lb, 12 N·m)

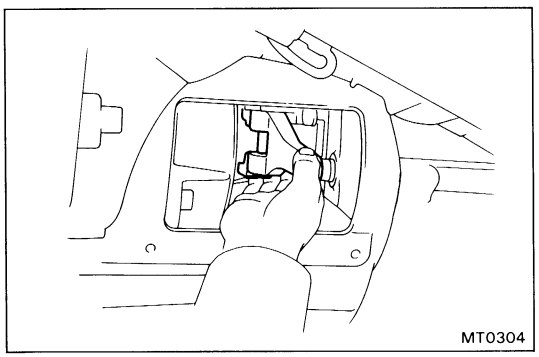
MT0304

1-2. (W58)
PLACE TRANSMISSION AT INSTALLATION POSITION, AND INSTALL TRANSMISSION MOUNTING BOLTS

(a) Align the input shaft spline with the clutch disc, and push the transmission fully into position.

(b) Install the two mounting bolts of the upper transmission, and torque the bolts.

Torque: 400 kg-cm (29 ft-lb, 39 N·m)

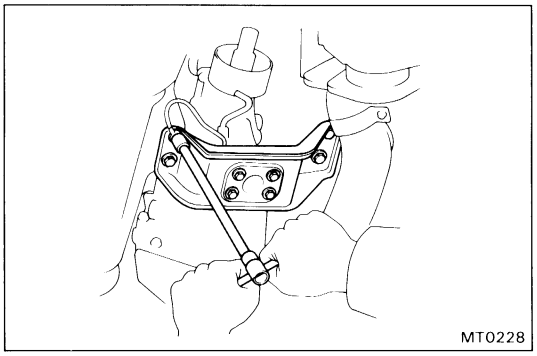

2. INSTALL ENGINE REAR MOUNTING

Install the eight bolts, and torque them.

Torque: 250 kg-cm (18 ft-lb, 25 N·m)

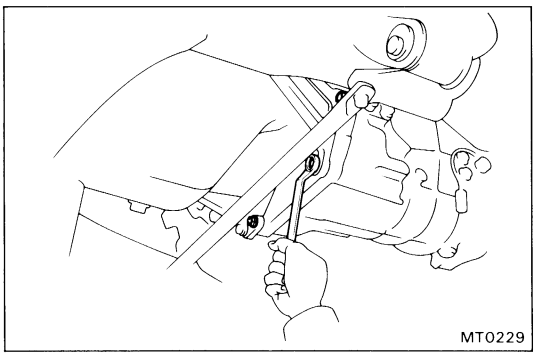

3. INSTALL TRANSMISSION MOUNTING BOLTS AND FLYWHEEL HOUSING UNDER COVER

Install and torque the bolts.

Torque:

Transmission mounting bolt	**400 kg-cm (29 ft-lb, 39 N·m)**
Stiffener plate bolt	**380 kg-cm (27 ft-lb, 37 N·m)**

4. INSTALL STARTER

Install the starter, and torque the bolts.

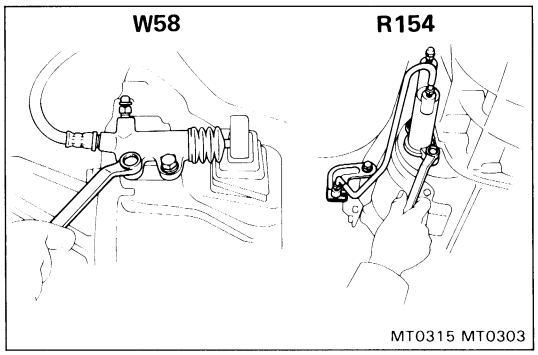

5. INSTALL CLUTCH RELEASE CYLINDER

Install and torque the two bolts.

Torque : 120 kg-cm (9 ft-lb, 12 N·m)

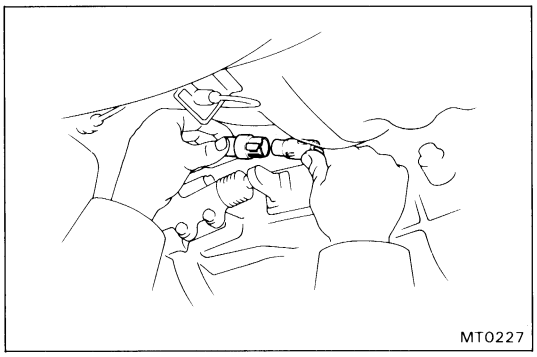

6. CONNECT BACK-UP LIGHT SWITCH CONNECTOR AND REAR SPEED SENSOR CONNECTOR (w/ A.B.S.)

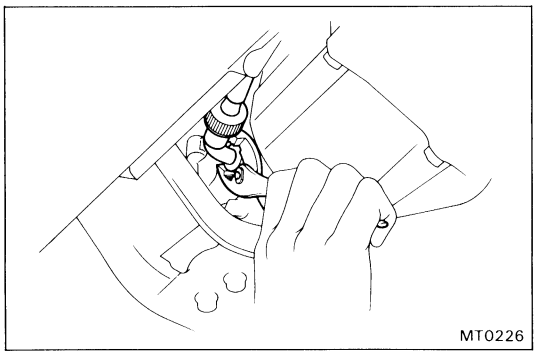

7. CONNECT SPEEDOMETER CABLE

8. (R154)
INSTALL EXHAUST FRONT PIPE

(a) Install the exhaust front pipe and nuts to the exhaust manifold. Torque the nuts.

Torque: 630 kg-cm (46 ft-lb, 62 N·m)

(b) Connect the exhaust pipe bracket to the clutch housing.

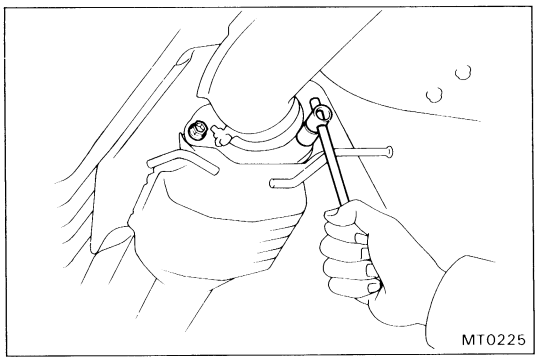

9. CONNECT EXHAUST FRONT PIPE TO TAIL PIPE

(a) Connect the front pipe to the tail pipe, and torque the bolts.

Torque: 440 kg-cm (32 ft-lb, 43 N·m)

(b) Install the rubber hanger.

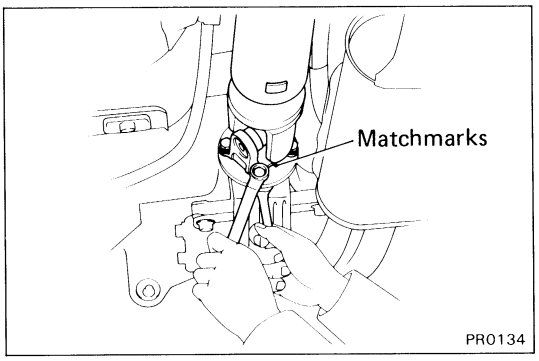

10. INSTALL PROPELLER SHAFT

(a) Align the matchmarks on both flanges.

(b) Install and torque the bolts.

Torque:

Propeller shaft flange
750 kg-cm (54 ft-lb, 74 N·m)

Center support bracket
500 kg-cm (36 ft-lb, 49 N·m)

11. FILL WITH TRANSMISSION OIL

Oil grade: API GL-4 or GL-5

Viscosity:

W58 M/T	**SAE 75W-90 or 80W-90**
R154 M/T	**SAE 75W-90**

Capacity:

W58 M/T	**2.4 liters (2.5 US qts, 2.1 Imp. qts)**
R154 M/T	**3.0 liters (3.2 US qts, 2.6 Imp. qts)**

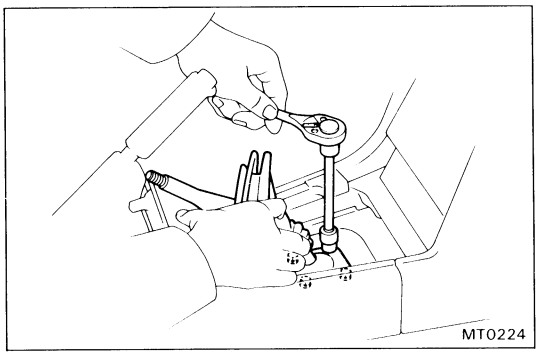

12. INSTALL SHIFT LEVER

13. INSTALL CENTER CLUSTER FINISH PANEL

14. INSTALL NEGATIVE BATTERY CABLE

15. PERFORM ROAD TEST

Check for any abnormal noise or operation.

Components (W58 Transmission)

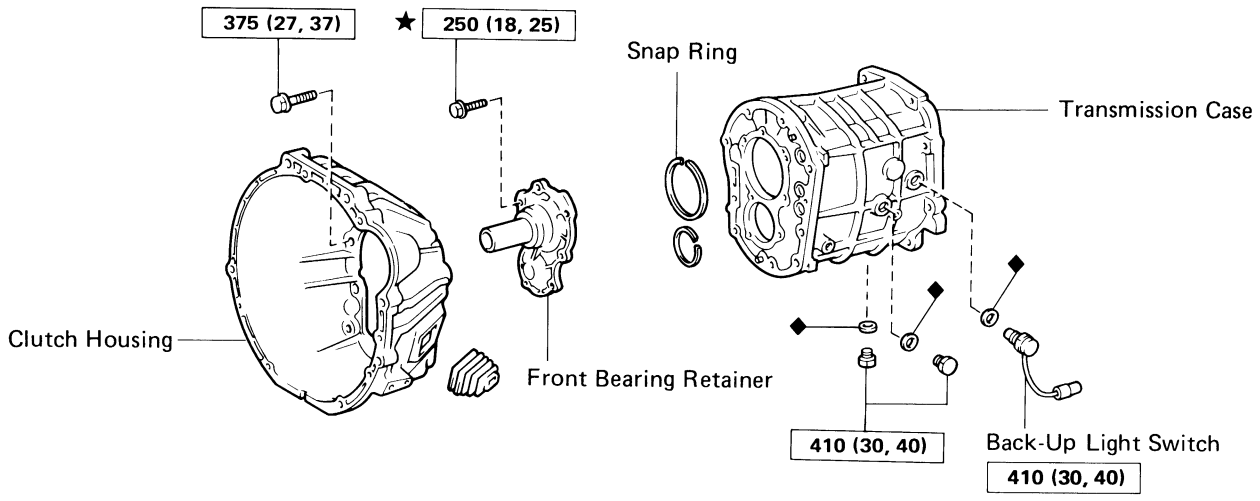

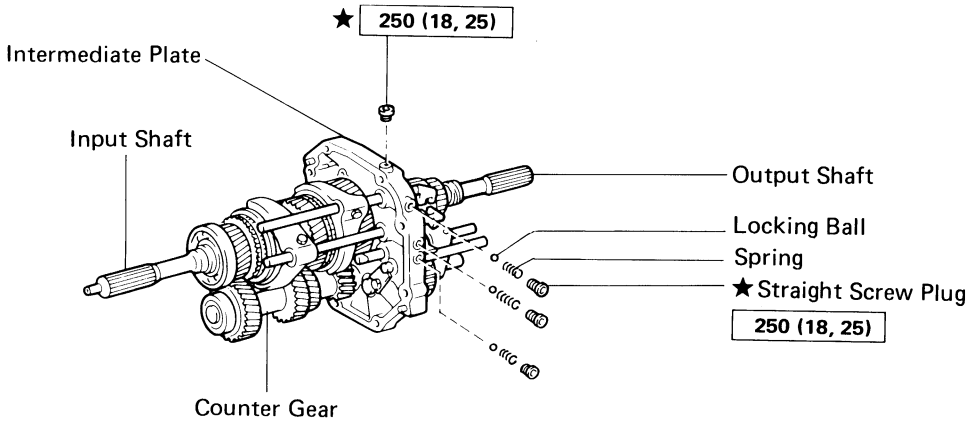

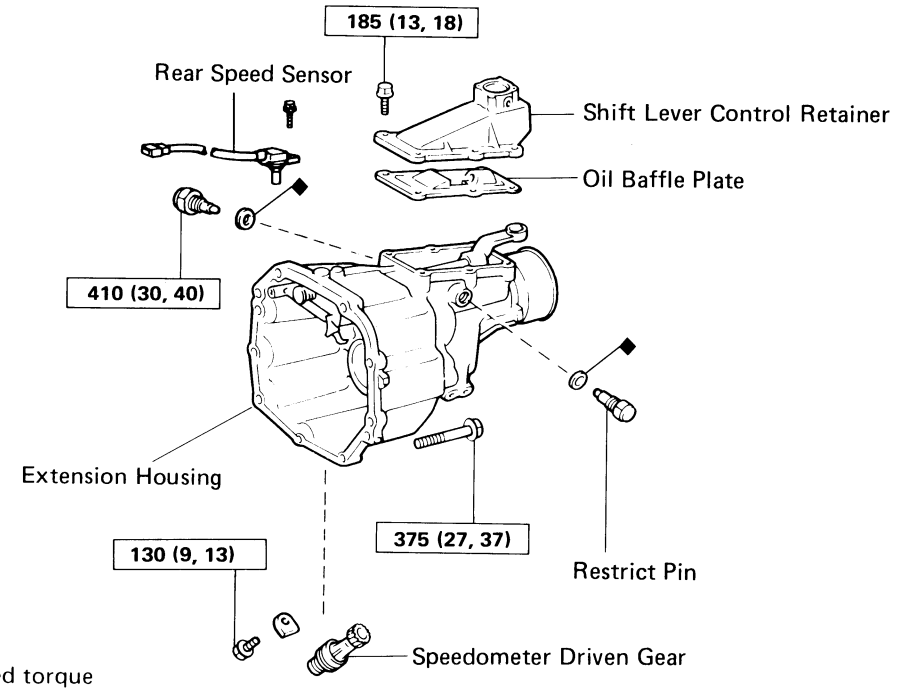

kg-cm (ft-lb, N·m) : Specified torque

◆ Non-reusable part

★ Precoated part

WM0319
WM0321
WM0286

Components (Cont'd)

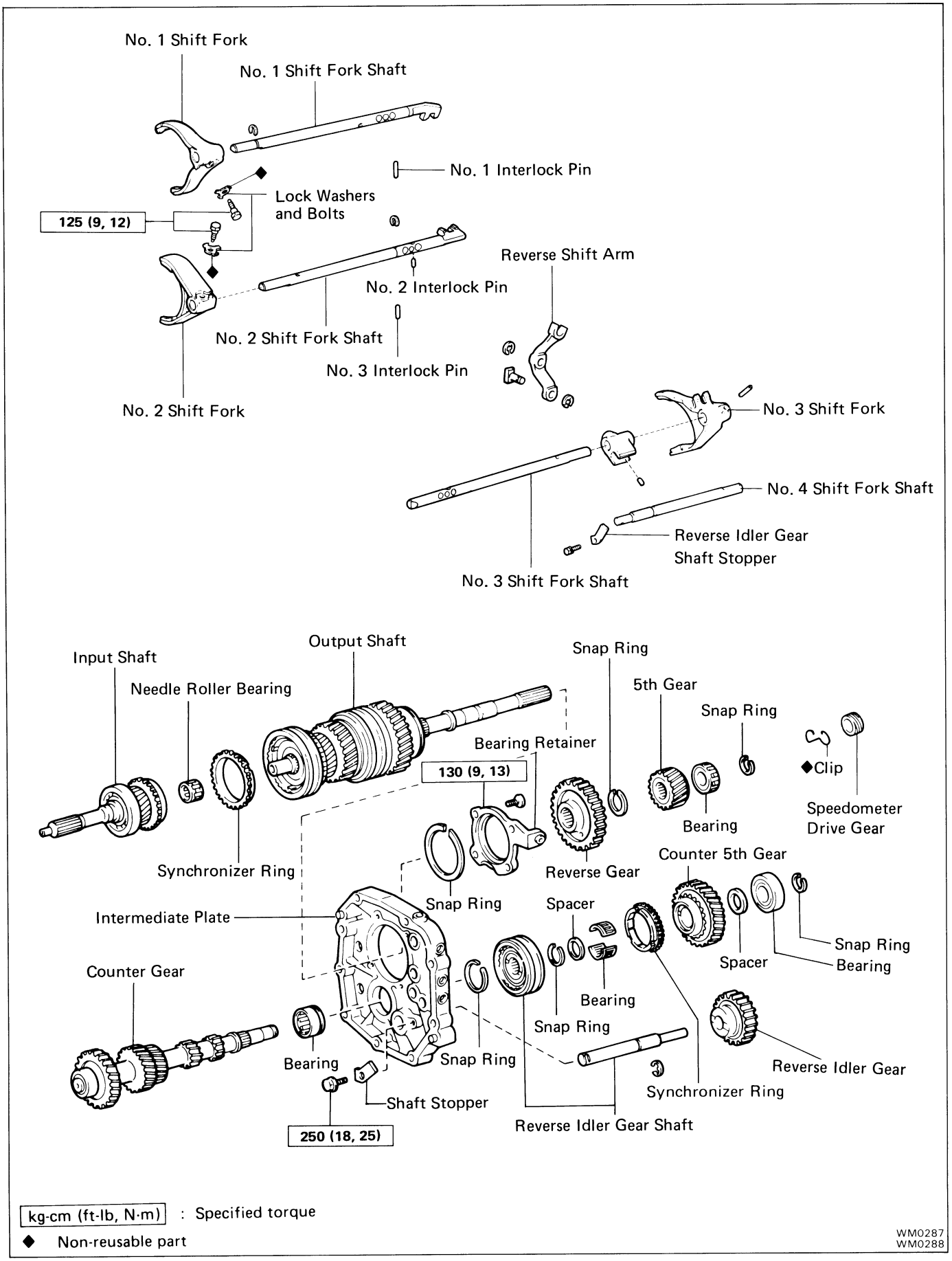

kg·cm (ft·lb, N·m) : Specified torque

◆ Non-reusable part

WM0287
WM0288

DISASSEMBLY OF TRANSMISSION

(See pages MT-9, 10)

1. **REMOVE BACK-UP LIGHT SWITCH, REAR SPEED SENSOR (w/ A.B.S.) AND SPEEDOMETER DRIVEN GEAR**

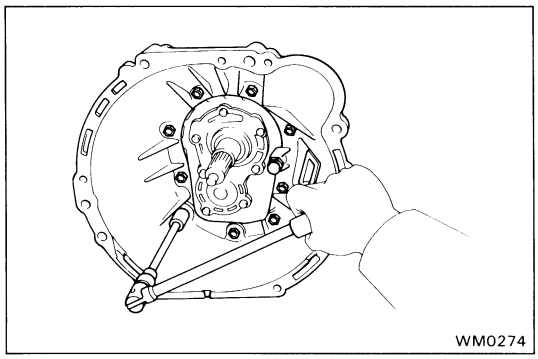

2. **REMOVE CLUTCH HOUSING FROM TRANSMISSION CASE**

   Remove nine bolts and clutch housing from transmission case.

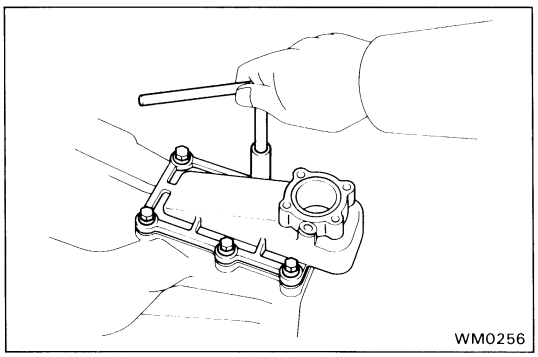

3. **REMOVE SHIFT LEVER RETAINER**

   (a) Remove the six bolts.

   (b) Remove shift lever retainer and oil baffle plate.

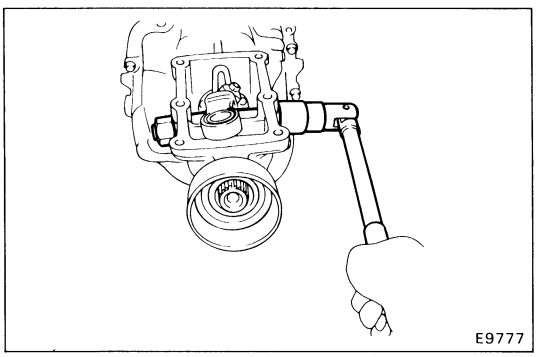

4. **REMOVE RESTRICT PIN**

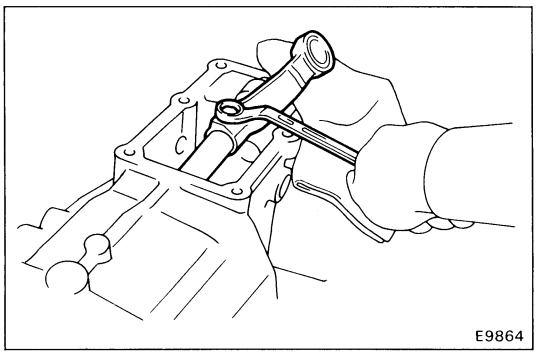

5. **REMOVE EXTENSION HOUSING**

   (a) Remove the shift lever housing set bolt.

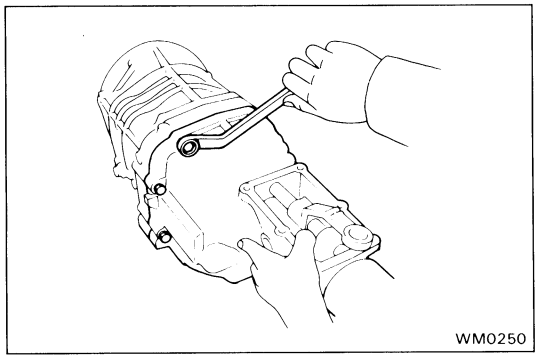

(b) Remove the nine bolts.

(c) Using a plastic hammer, tap the extension housing.

(d) Disengage the shift and select lever from the shift head.

(e) Pull out the extension housing.

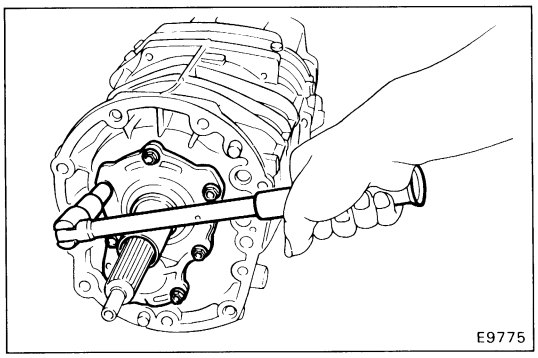

6. REMOVE FRONT BEARING RETAINER AND BEARING SNAP RINGS

(a) Remove seven bolts and front bearing retainer.

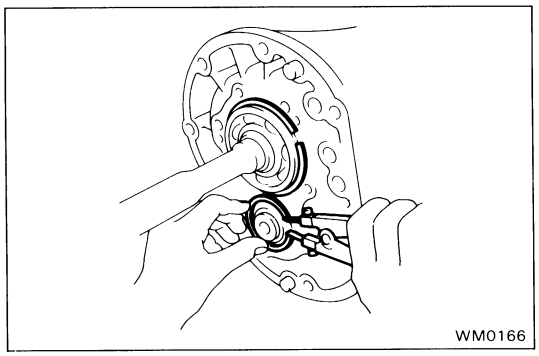

(b) Using a snap ring pliers, remove two bearing snap rings.

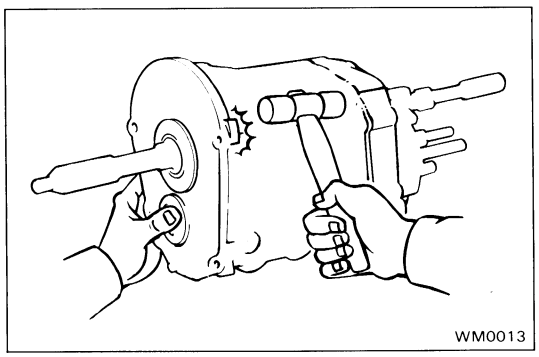

7. SEPARATE INTERMEDIATE PLATE FROM TRANSMISSION CASE

(a) Using a plastic hammer, carefully tap the transmission case.

(b) Pull the transmission case from the intermediate plate.

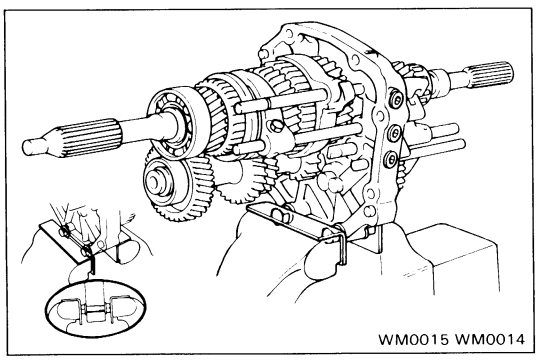

8. MOUNT INTERMEDIATE PLATE IN VISE

(a) Use two long clutch housing bolts, plate washers and suitable nuts as shown.

NOTICE: Install the plate washers in reverse of normal. Increase or decrease plate washers so that the bolt tip and the front tip surface of the nut are aligned.

(b) Mount the intermediate plate in a vise.

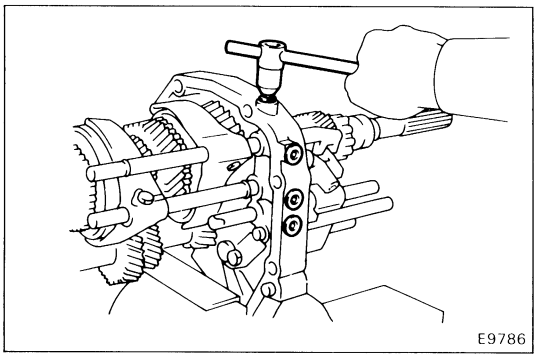

9. REMOVE LOCKING BALL AND SPRING

(a) Using SST, remove the four plugs.

SST 09313-30021

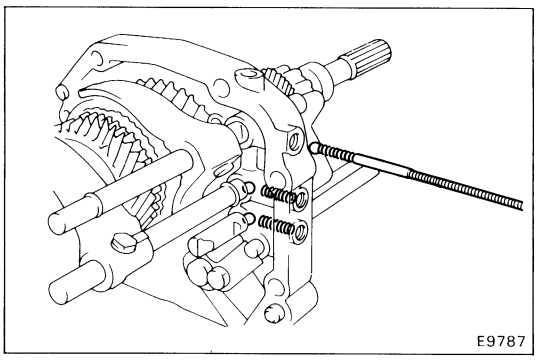

(b) Using a magnetic finger, remove the three springs and balls.

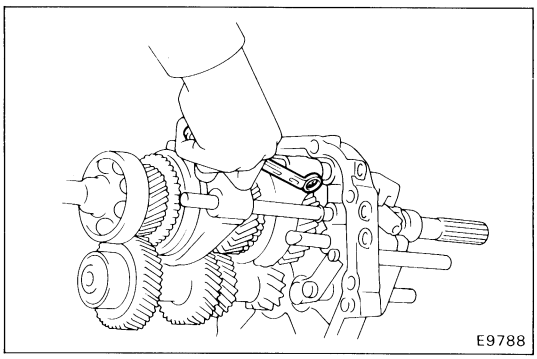

10. REMOVE SHIFT FORKS, SHIFT FORK SHAFTS AND REVERSE IDLER GEAR

(a) Pry out the lock washer of No.1 shift fork and remove the set bolt.

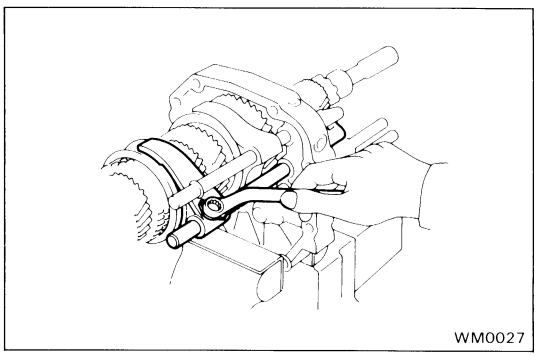

(b) Pry out the lock washer of No.2 shift fork and remove the set bolt.

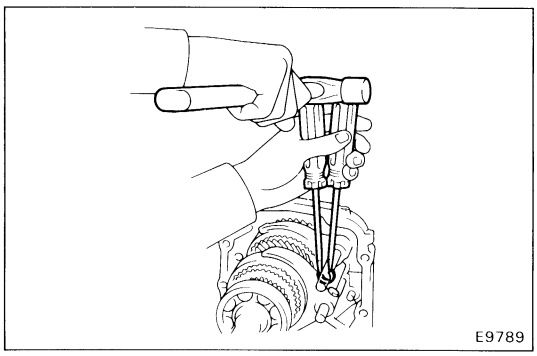

(c) Using two screwdriver and a hammer, tap out the snap ring of No.1 fork shaft.

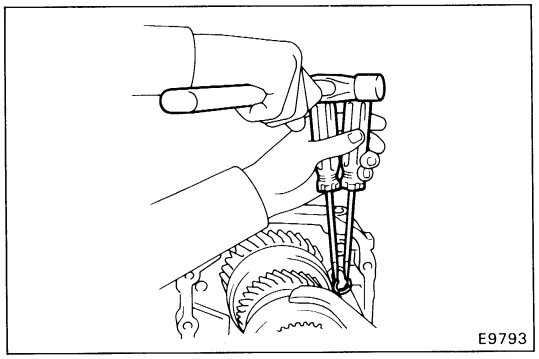

(d) Using two screwdriver and hammer, tap out the snap ring of No.2 fork shaft.

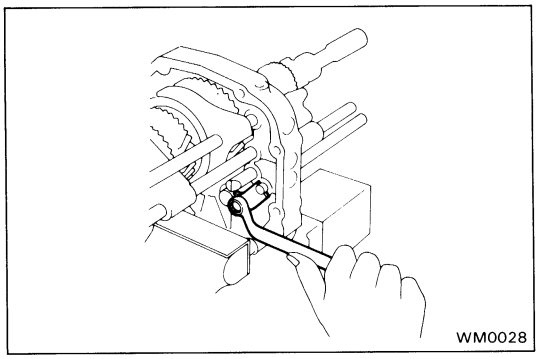

(e) Remove the reverse idler gear shaft stopper.

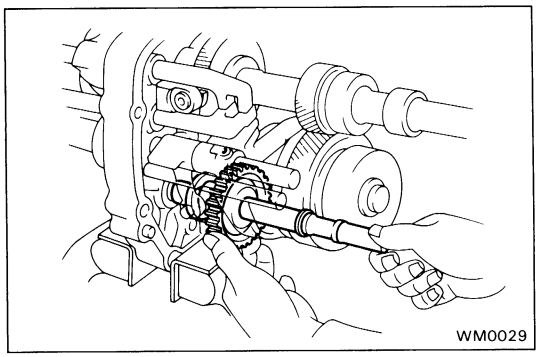

(f) Remove the reverse idler gear and shaft.

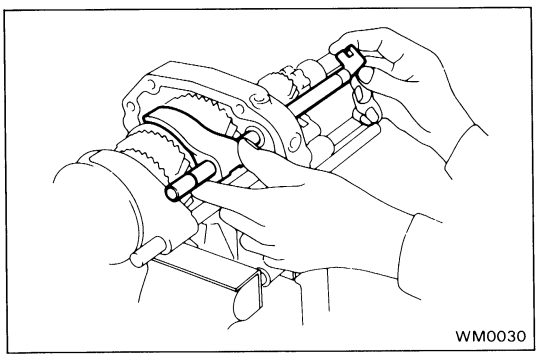

(g) Remove No.1 shift fork and shaft.

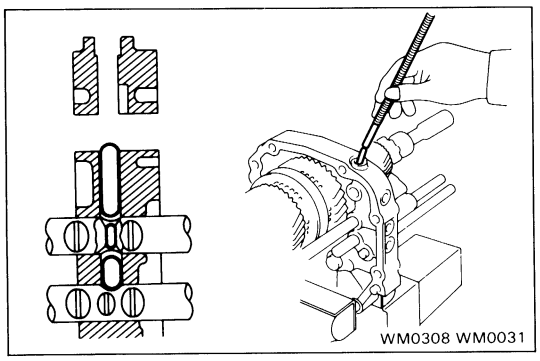

(h) Using a magnetic finger, remove No.1 and No.2 interlock pins.

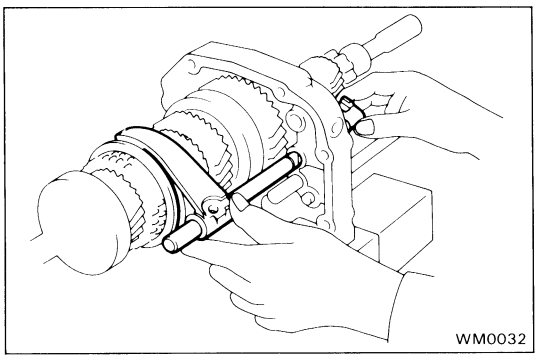

(i) Remove No.2 shift fork and shaft.

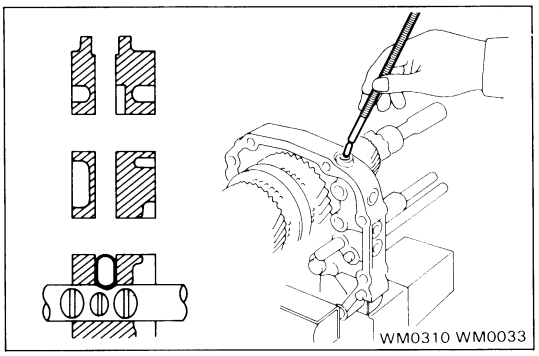

(j) Using a magnetic finger, remove No.3 interlock pin.

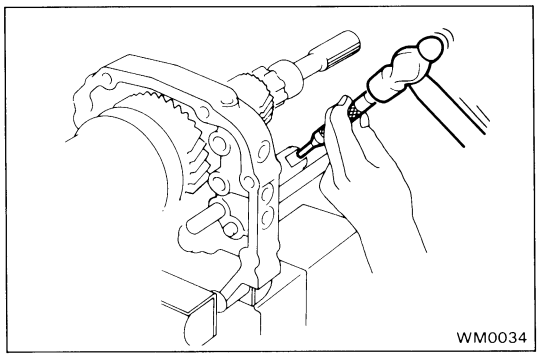

(k) Using a pin punch and hammer, drive out No.3 fork shaft pin.

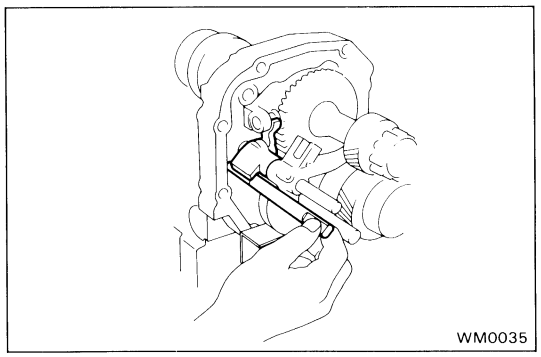

(l) Pull out No.4 shift fork shaft.

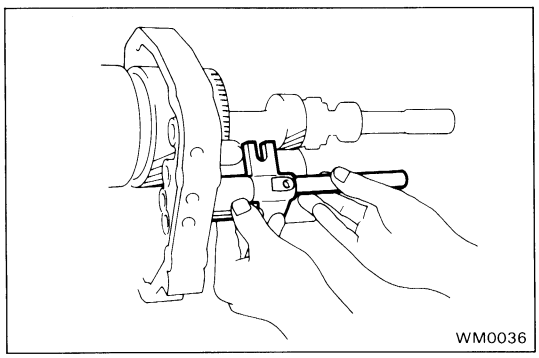

(m) Remove No.3 shift fork, fork shaft and reverse shift arm with the pin.

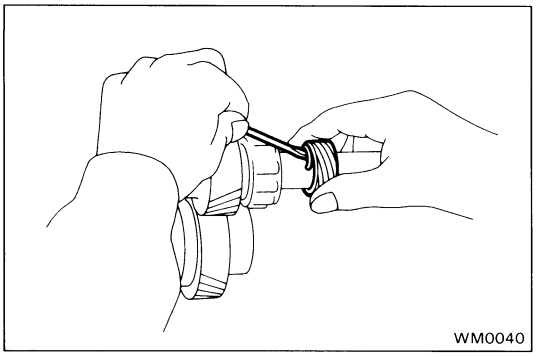

11. REMOVE SPEEDOMETER DRIVE GEAR

Pry out both ends of the clip and remove the drive gear.

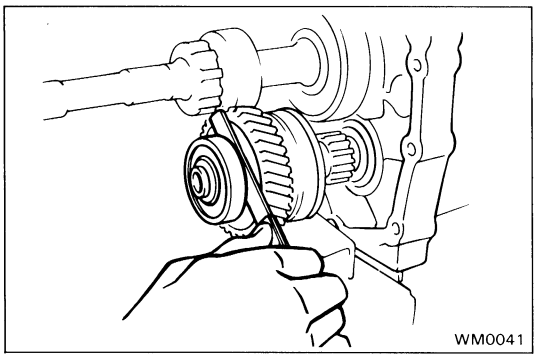

12. MEASURE COUNTER FIFTH GEAR THRUST CLEARANCE

Using a feeler gauge, measure the counter 5th gear thrust clearance.

Standard clearance: **0.10 — 0.41 mm (0.0039 — 0.0161 in.)**
Maximum clearance: **0.46 mm (0.0181 in.)**

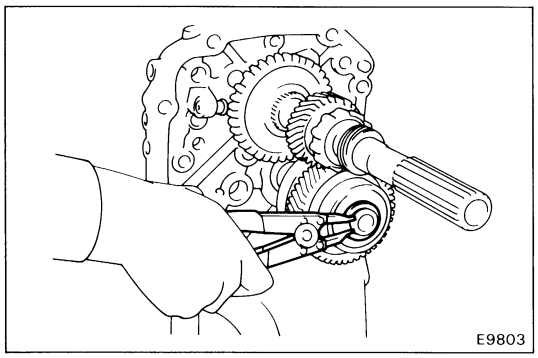

13. REMOVE COUNTER REAR BEARING, SPACER, COUNTER FIFTH GEAR AND NEEDLE ROLLER BEARING

(a) Using snap ring pliers, remove the snap ring.

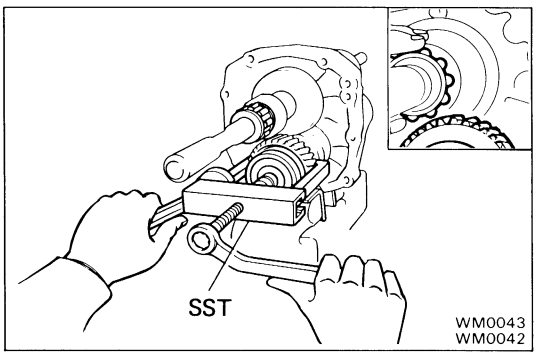

(b) Using SST, remove the rear bearing, spacer, 5th gear and bearing.

SST 09213-36020

NOTICE: Be careful not to catch the output shaft rear bearing roller on the counter 5th gear.

(c) Remove the spacer.

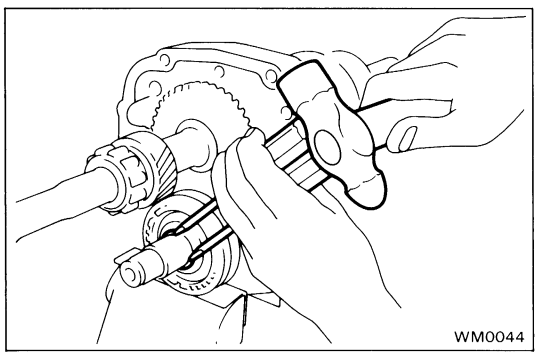

14. REMOVE NO.3 HUB SLEEVE ASSEMBLY

(a) Using two screwdrivers and a hammer, tap out the snap ring.

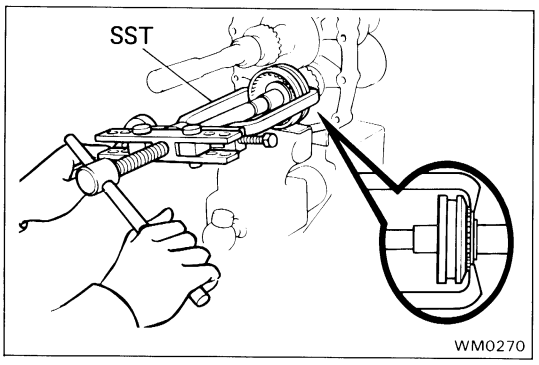

(b) Using SST, remove No.3 clutch hub.

SST 09950-20017

NOTICE: Latch the claw of the SST onto the clutch hub not the shifting key retainer.

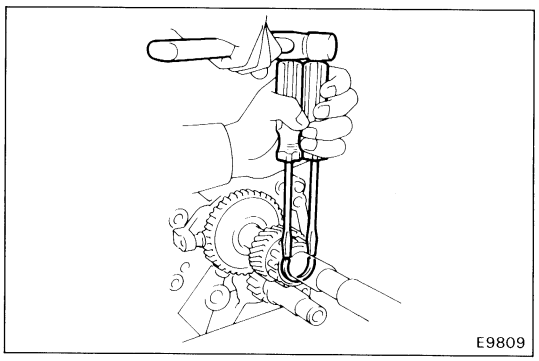

15. REMOVE OUTPUT SHAFT REAR BEARING AND FIFTH GEAR

(a) Using two screwdrivers and a hammer, tap out the snap ring.

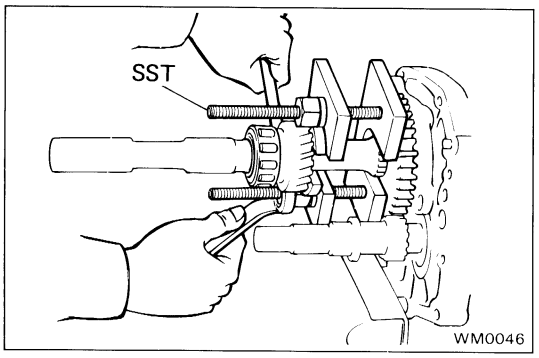

(b) Using SST, remove the rear bearing and 5th gear.

SST 09312-20011

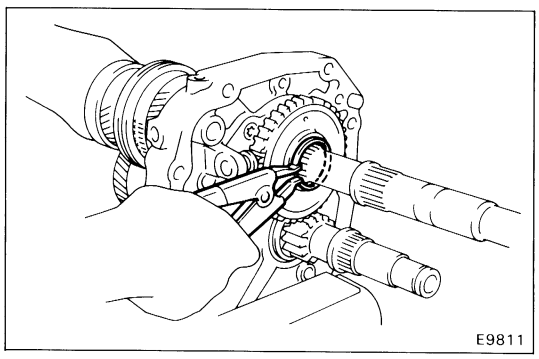

16. REMOVE REVERSE GEAR

(a) Using snap ring pliers, remove the snap ring.

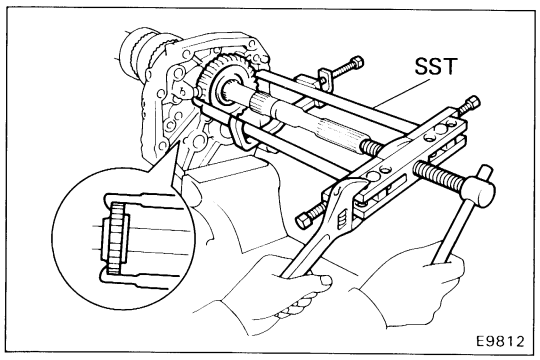

(b) Using SST, remove the reverse gear.

SST 09950-20017

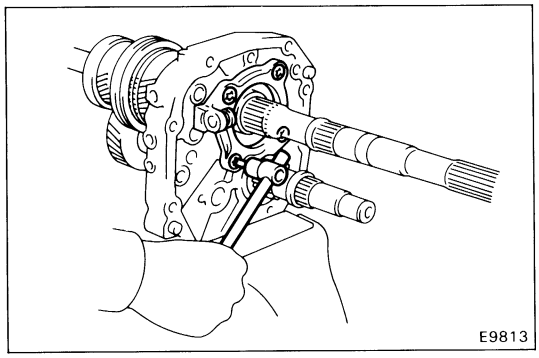

17. REMOVE CENTER BEARING RETAINER

(a) Using a torx socket wrench, unscrew the torx screws and remove the retainer.

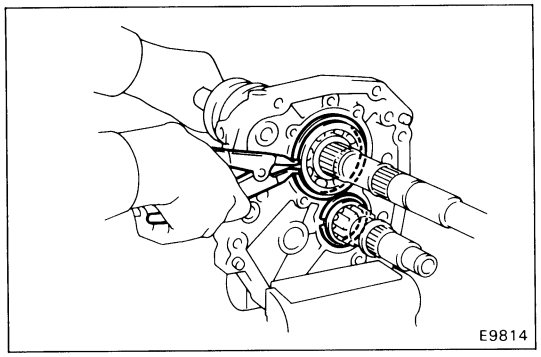

(b) Using snap ring pliers, remove the snap rings.

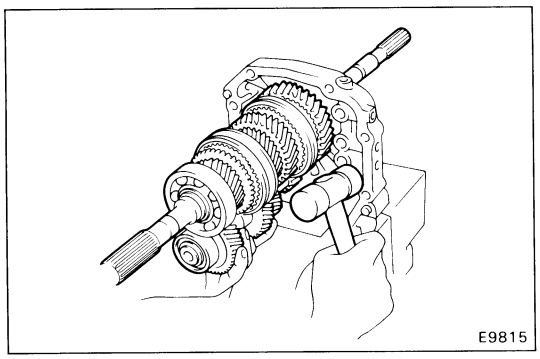

18. REMOVE OUTPUT SHAFT AND COUNTER GEAR AS A UNIT FROM INTERMEDIATE PLATE

(a) Remove the output shaft, input shaft and counter gear as a unit from the intermediate plate by pulling on the counter gear and tapping on the intermediate plate with a plastic hammer.

(b) Remove the input shaft from output shaft.

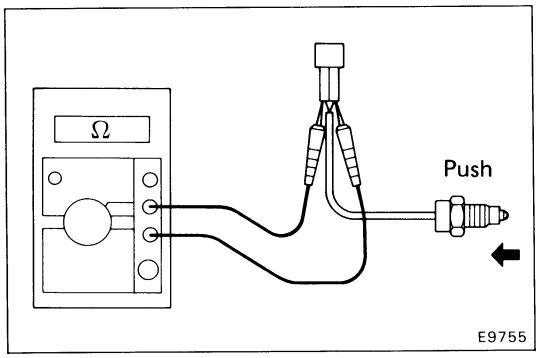

19. INSPECT BACK UP LIGHT SWITCH

Check that there is continuity between terminal as shown.

Switch Position	Specified
Push	Continuity
Free	No continuity

If operations not as specified, replace switch.

COMPONENT PARTS

Input Shaft Assembly

COMPONENTS

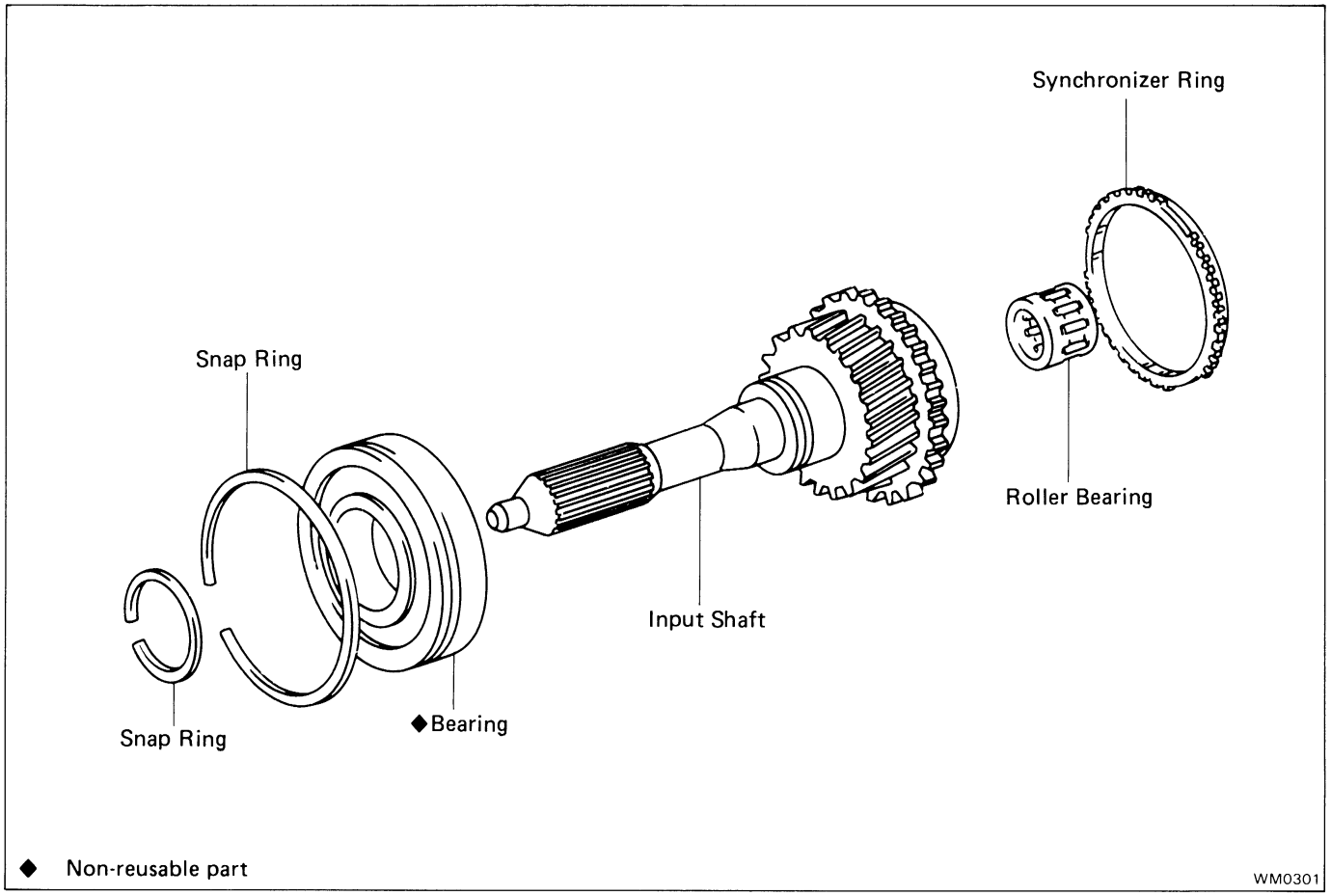

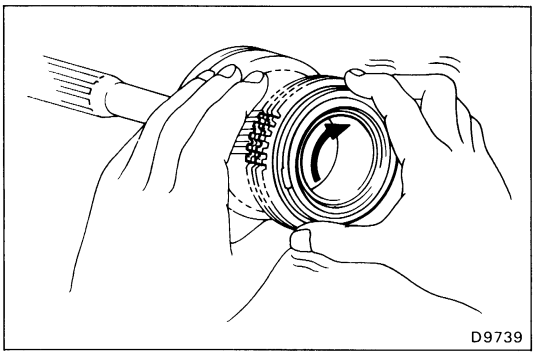

INSPECTION OF INPUT SHAFT ASSEMBLY

INSPECT SYNCHRONIZER RING

(a) Turn the ring and push it in to check the braking action.

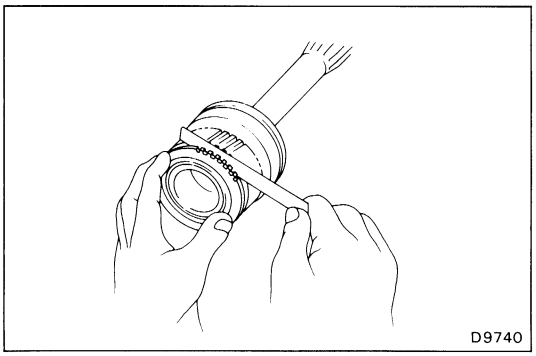

(b) Measure the clearance between the synchronizer ring back and the gear spline end.

Standard clearance: **0.7 — 1.7 mm (0.028 — 0.067 in.)**

Minimum clearance: **0.5 mm (0.020 in.)**

If the clearance is less than the limit, replace the synchronizer ring.

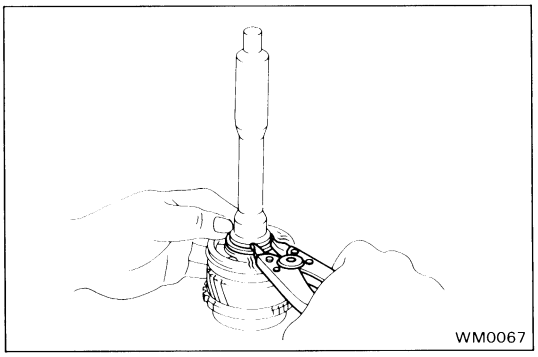

REPLACEMENT OF BEARING

IF NECESSARY, REPLACE INPUT SHAFT BEARING

(a) Using snap ring pliers, remove the snap ring.

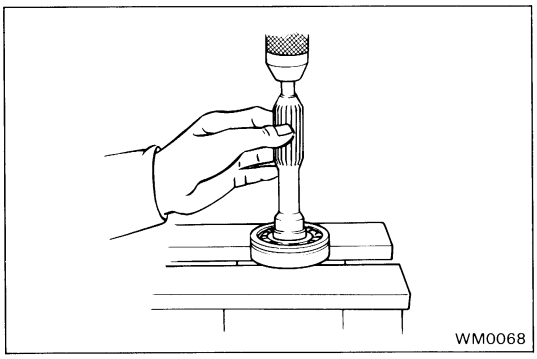

(b) Using a press, remove the bearing.

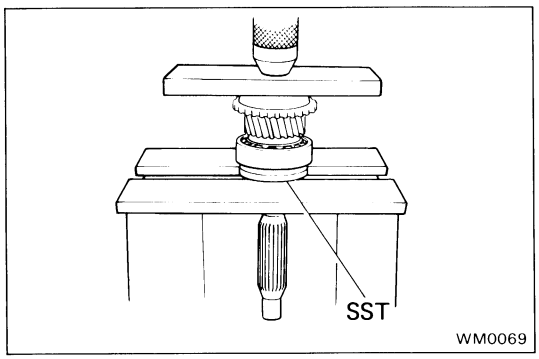

(c) Using a press and SST, install a new bearing.

SST 09506-35010

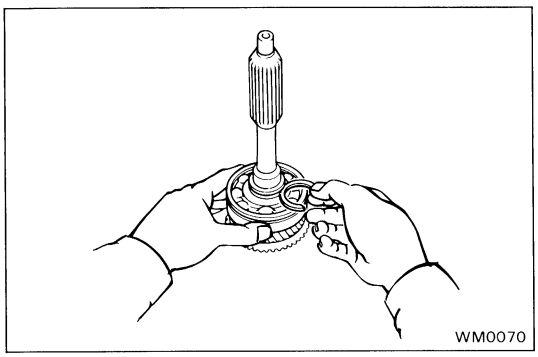

(d) Select a snap ring that will allow minimum axial play and install it on the shaft.

Mark	Thickness mm (in.)
1	2.05 – 2.10 (0.0807 – 0.0827)
2	2.10 – 2.15 (0.0827 – 0.0846)
3	2.15 – 2.20 (0.0846 – 0.0866)
4	2.20 – 2.25 (0.0866 – 0.0886)
5	2.25 – 2.30 (0.0886 – 0.0906)
11	2.30 – 2.35 (0.0906 – 0.0925)
12	2.35 – 2.40 (0.0925 – 0.0945)

Output Shaft Assembly

COMPONENTS

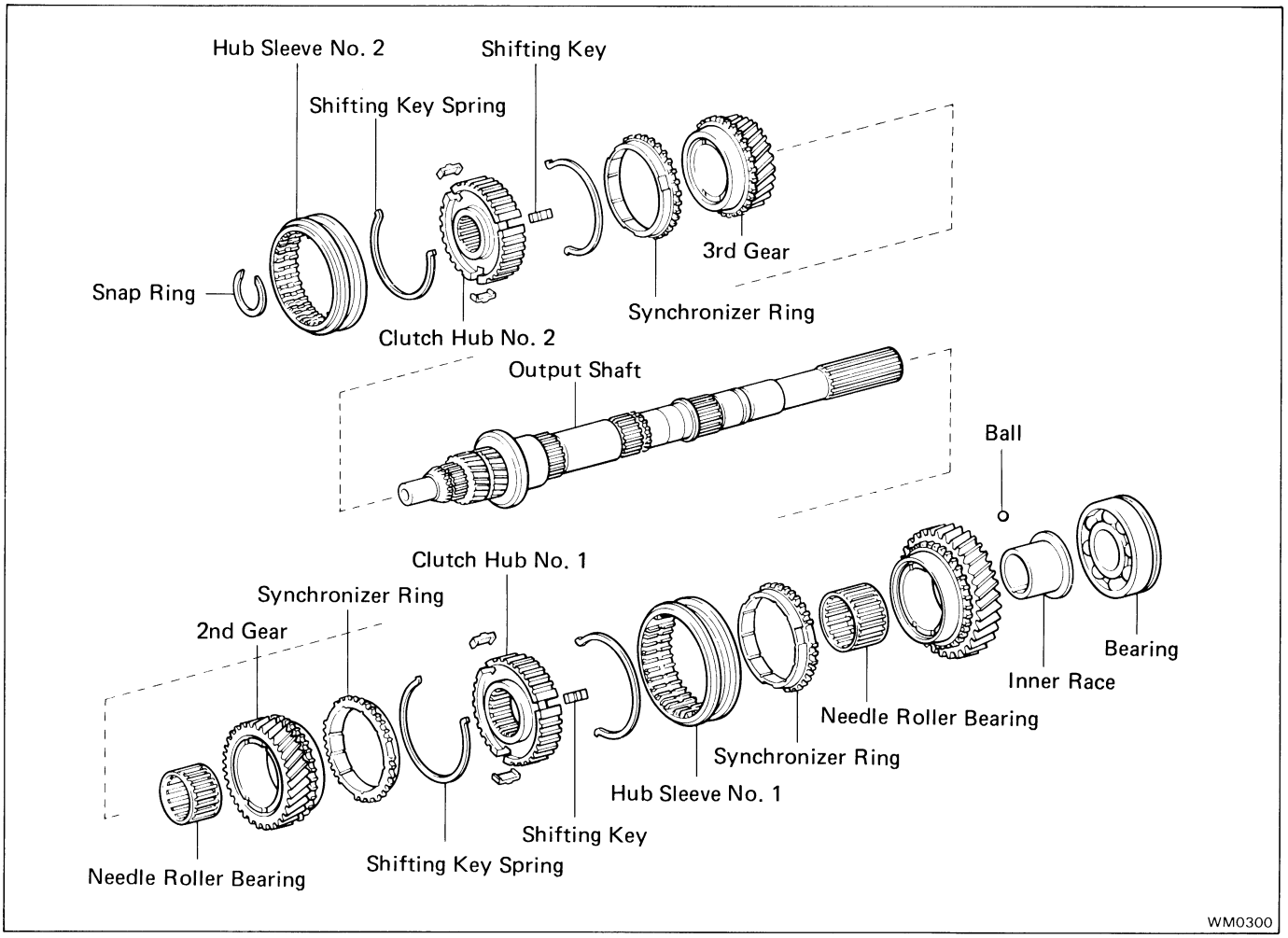

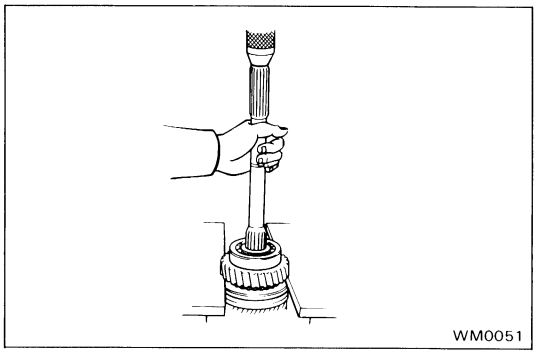

DISASSEMBLY OF OUTPUT SHAFT ASSEMBLY

1. REMOVE OUTPUT SHAFT CENTER BEARING AND FIRST GEAR ASSEMBLY

(a) Shift No.1 hub sleeve onto the 2nd gear.

(b) Using a press, remove the center bearing, 1st gear, needle roller bearing, inner race and synchronizer ring.

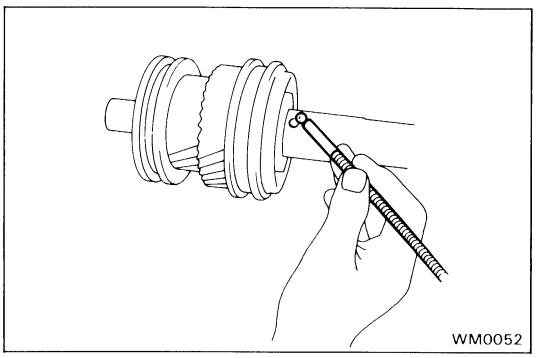

2. REMOVE LOCKING BALL

Using a magnetic finger, remove the locking ball.

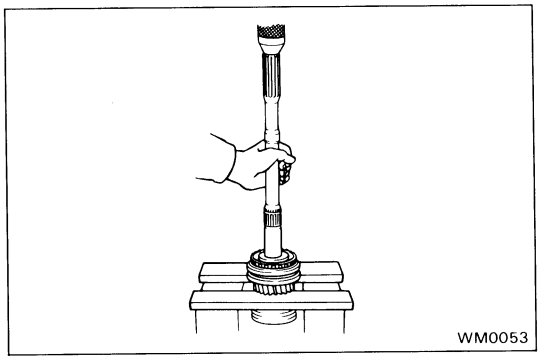

3. REMOVE NO.1 HUB SLEEVE ASSEMBLY, SECOND GEAR AND NEEDLE ROLLER BEARING

Using a press, remove the parts from the shaft as an assembly.

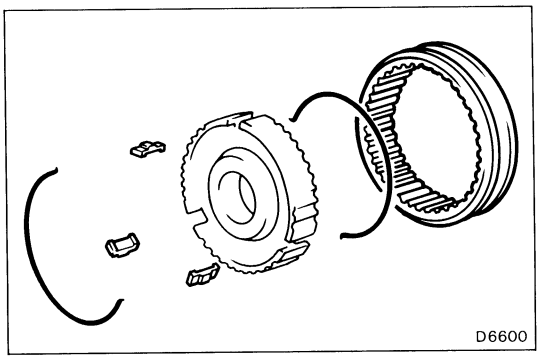

4. REMOVE THE HUB SLEEVE NO.1, SHIFTING KEYS AND SPRINGS FROM CLUTCH HUB NO.1

Using a screwdriver, remove the two shifting key springs, three shifting keys and hub sleeve No.1 from clutch hub No.1.

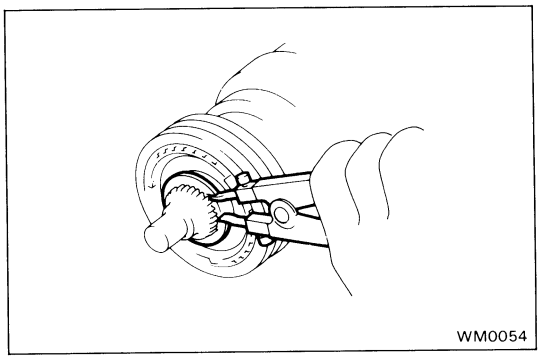

5. REMOVE NO.2 HUB SLEEVE ASSEMBLY AND THIRD GEAR

(a) Using snap ring pliers, remove the snap ring.

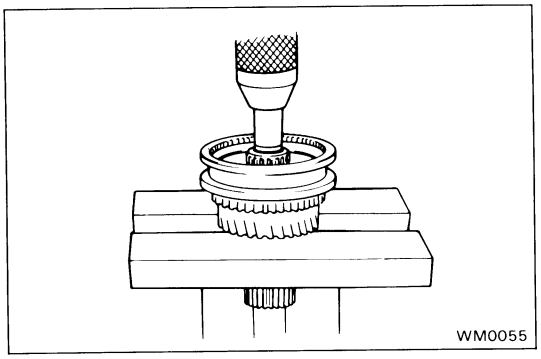

(b) Using a press, remove No.2 hub sleeve, synchronizer ring and 3rd gear.

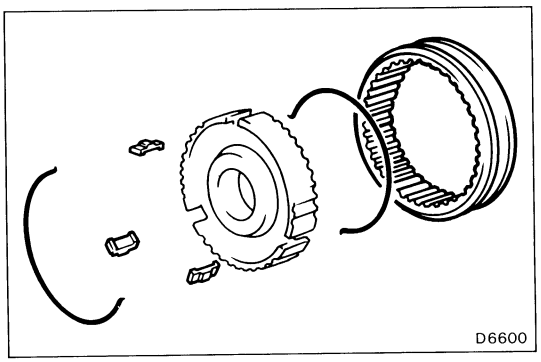

6. REMOVE THE HUB SLEEVE NO.2

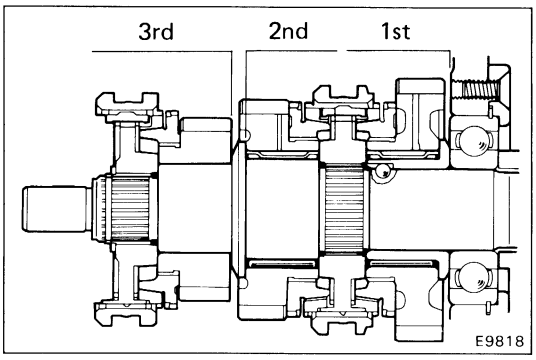

INSPECTION OF OUTPUT SHAFT ASSEMBLY

1. MEASURE EACH GEAR THRUST CLEARANCE

Using a feeler gauge, measure the thrust clearance of each gear.

Standard clearance: **0.10 — 0.25 mm (0.0039 — 0.0098 in.)**
Maximum clearance: **0.30 mm (0.0118 in.)**

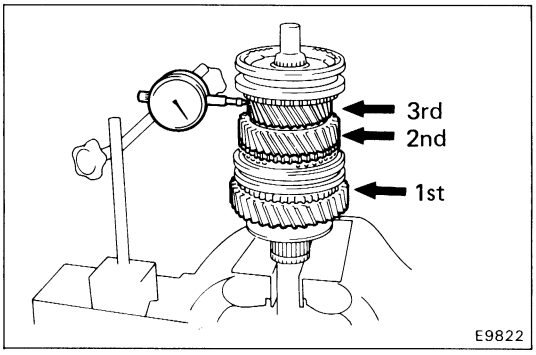

2. MEASURE EACH GEAR OIL CLEARANCE

Using a dial indicator, measure the oil clearance of each gear.

Standard clearance:
- **1st and 2nd gear** **0.009 — 0.060 mm (0.0004 — 0.0024 in.)**
- **3rd gear** **0.060 — 0.103 mm (0.0024 — 0.0041 in.)**

Maximum clearance:
- **1st and 2nd gear** **0.15 mm (0.0059 in.)**
- **3rd gear** **0.20 mm (0.0079 in.)**

If the clearance exceeds the limit, replace the gear, shaft or needle roller bearing.

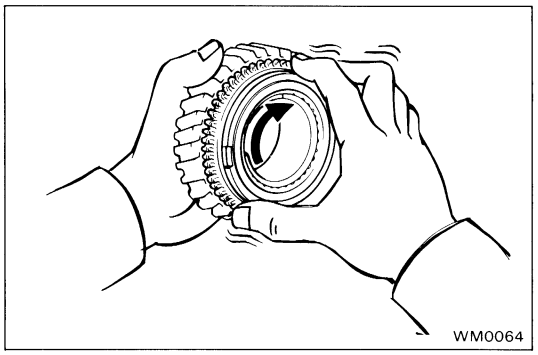

3. INSPECT SYNCHRONIZER RINGS

(a) Turn the ring and push it in to check the braking action.

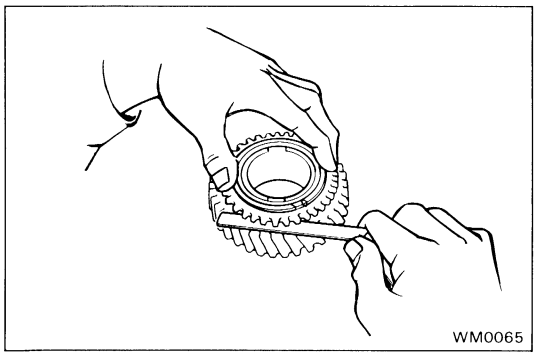

(b) Measure the clearance between the synchronizer ring back and the gear spline end.

Standard clearance: **0.7 — 1.7 mm (0.028 — 0.067 in.)**
Minimum clearance: **0.5 mm (0.020 in.)**

If the clearance is less than the limit, replace the synchronizer ring.

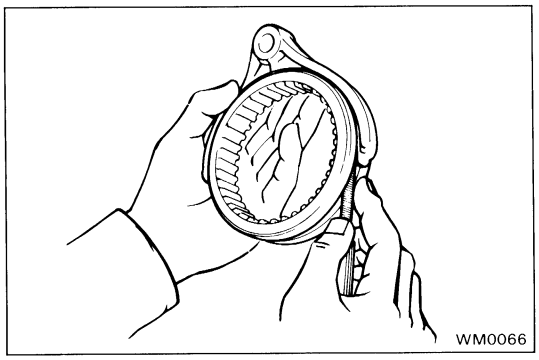

4. MEASURE CLEARANCE OF SHIFT FORKS AND HUB SLEEVES

Using a feeler gauge, measure the clearance between the hub sleeve and shift fork.

Maximum clearance: 1.0 mm (0.039 in.)

If the clearance exceeds the limit, replace the shift fork or hub sleeve.

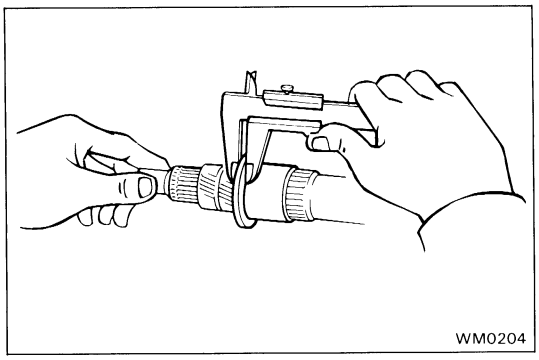

5. INSPECT OUTPUT SHAFT AND INNER RACE

(a) Using calipers, measure the output shaft flange thickness.

Minimum thickness: 5.60 mm (0.2205 in.)

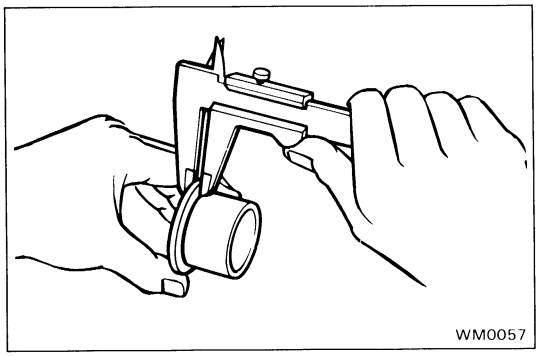

(b) Using calipers, measure the inner race flange thickness.

Minimum thickness: 4.76 mm (0.1874 in.)

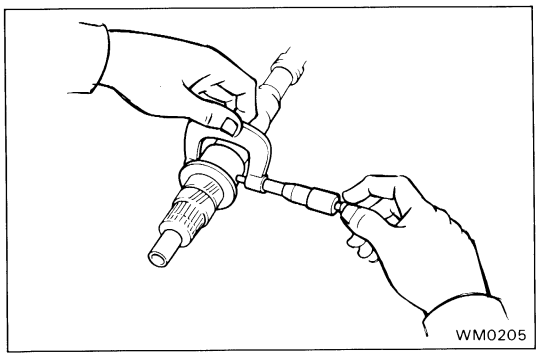

(c) Using a micrometer, measure the outer diameter of the output shaft journal.

Minimum diameter:
2nd gear 42.84 mm (1.6866 in.)
3rd gear 27.86 mm (1.0968 in.)

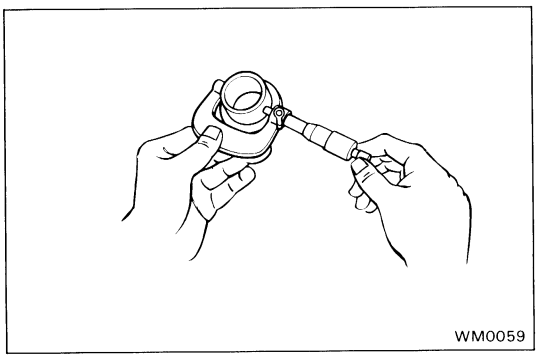

(d) Using a micrometer, measure the outer diameter of the inner race.

Minimum diameter: 42.85 mm (1.6870 in.)

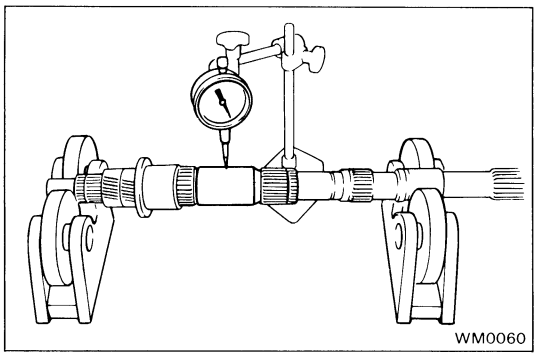

(e) Using a dial indicator, check the shaft runout.

Maximum runout: 0.06 mm (0.0024 in.)

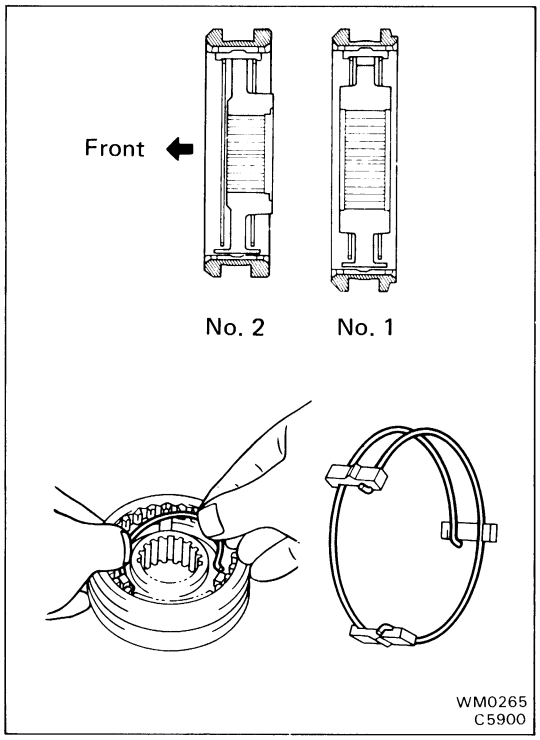

ASSEMBLY OF OUTPUT SHAFT ASSEMBLY

1. INSERT NO.1 AND NO.2 CLUTCH HUB INTO HUB SLEEVE

(a) Install the clutch hub and shifting keys to the hub sleeve.

(b) Install the shifting key springs under the shifting keys.

NOTICE: Install the key springs positioned so that their end gaps are not in line.

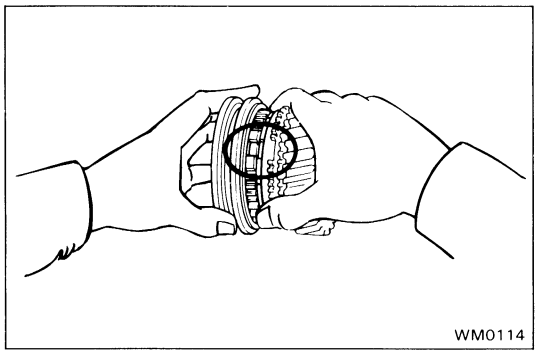

2. INSTALL THIRD GEAR AND NO.2 CLUTCH HUB ON OUTPUT SHAFT

(a) Apply gear oil to the shaft.

(b) Place the synchronizer ring on the gear and align the ring slots with the shifting keys.

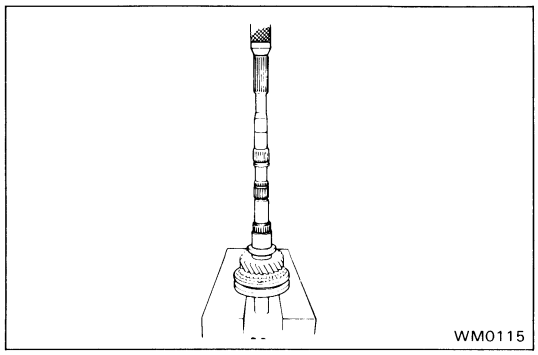

(c) Using a press, install the 3rd gear and No.2 clutch hub.

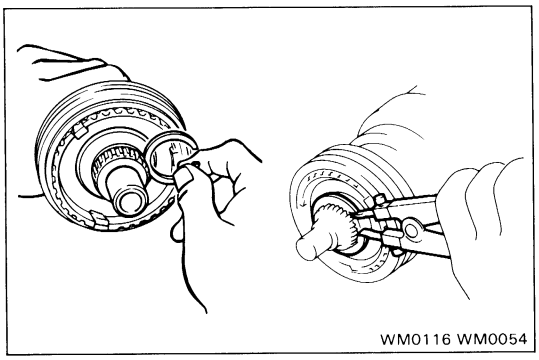

3. INSTALL SNAP RING

Select a snap ring that will allow minimum axial play, and install it on the shaft.

Mark	Thickness mm (in.)
D	1.80 — 1.85 (0.0709 — 0.0728)
11	1.86 — 1.91 (0.0732 — 0.0752)
12	1.92 — 1.97 (0.0756 — 0.0776)
13	1.98 — 2.03 (0.0780 — 0.0799)
14	2.04 — 2.09 (0.0803 — 0.0823)
15	2.10 — 2.15 (0.0827 — 0.0846)

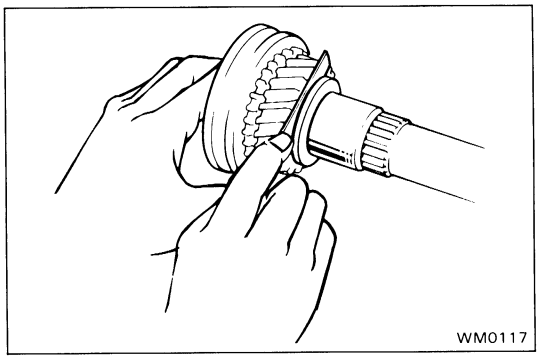

4. MEASURE THIRD GEAR THRUST CLEARANCE

Using a feeler gauge, measure the 3rd gear thrust clearance.

Standard clearance: 0.10 — 0.25 mm (0.0039 — 0.0098 in.)

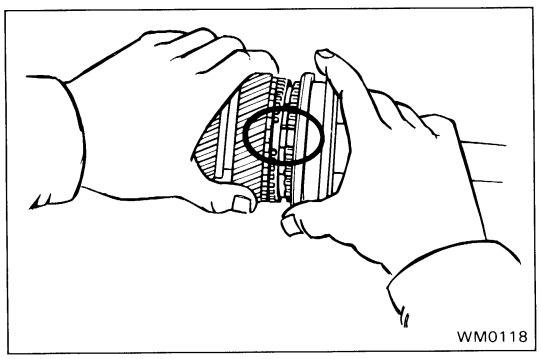

5. INSTALL SECOND GEAR AND NO.1 CLUTCH HUB

(a) Apply gear oil to the shaft and needle roller bearing.

(b) Place the synchronizer ring on the gear and align the ring slots with the shifting keys.

(c) Install the needle roller bearing in the 2nd gear.

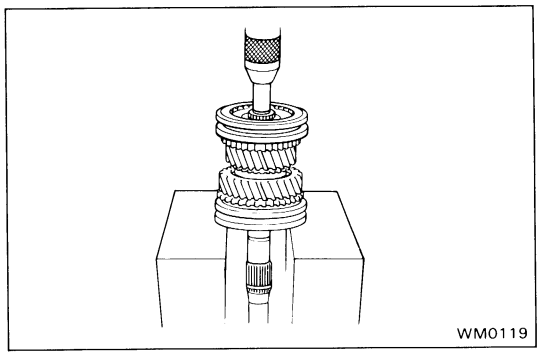

(d) Using a press, install the 2nd gear and No.1 clutch hub.

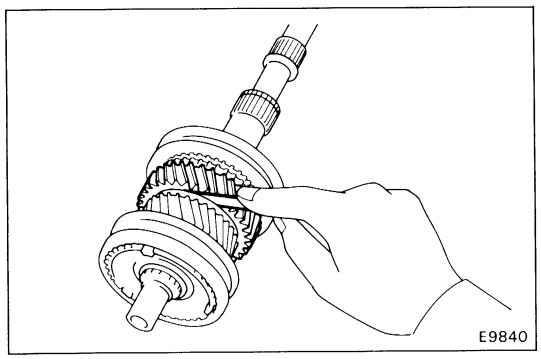

6. MEASURE SECOND GEAR THRUST CLEARANCE

Using a feeler gauge, measure the 2nd gear thrust clearance.

Standard clearance: 0.10 — 0.25 mm (0.0039 — 0.0098 in.)

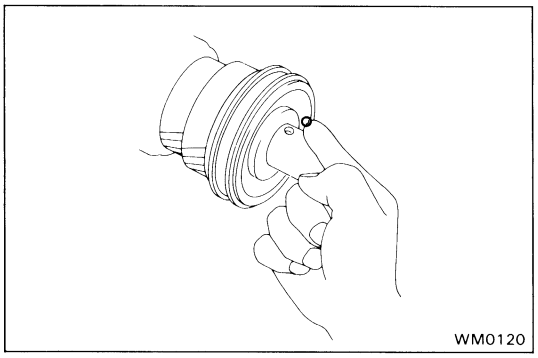

7. INSTALL LOCKING BALL AND FIRST GEAR ASSEMBLY

(a) Install the locking ball in the shaft.

(b) Apply gear oil to the bearing.

(c) Assemble the 1st gear, synchronizer ring, needle roller bearing and bearing inner race.

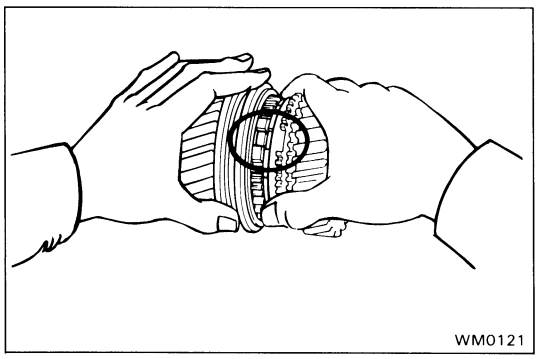

(d) Install the assembly on the output shaft with the synchronizer ring slots aligned with the shifting keys and turn the inner race to align it with the locking ball.

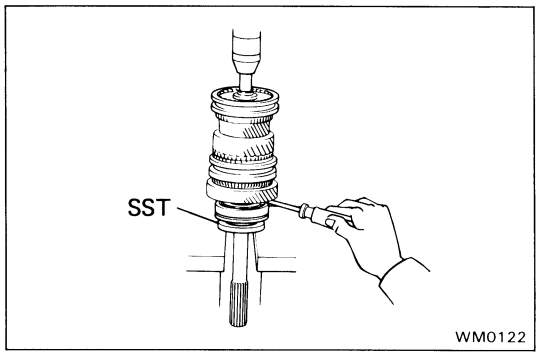

8. INSTALL OUTPUT SHAFT CENTER BEARING

Using SST and a press, install the bearing on the output shaft with the outer race snap ring groove toward the rear.

HINT: Hold the 1st gear inner race to prevent it from falling.

SST 09506-35010

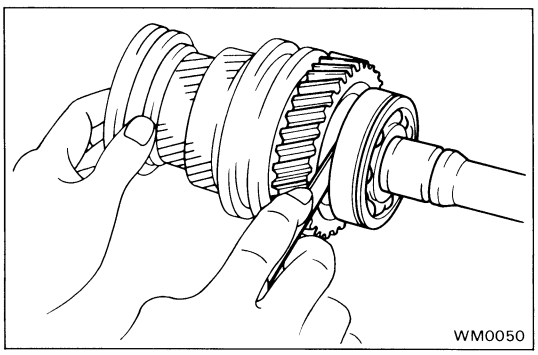

9. MEASURE FIRST GEAR THRUST CLEARANCE

Using a feeler gauge, measure the 1st gear thrust clearance.

Standard clearance: 0.10 — 0.25 mm (0.0039 — 0.0098 in.)

Counter Gear and Reverse Idler Gear

COMPONENTS

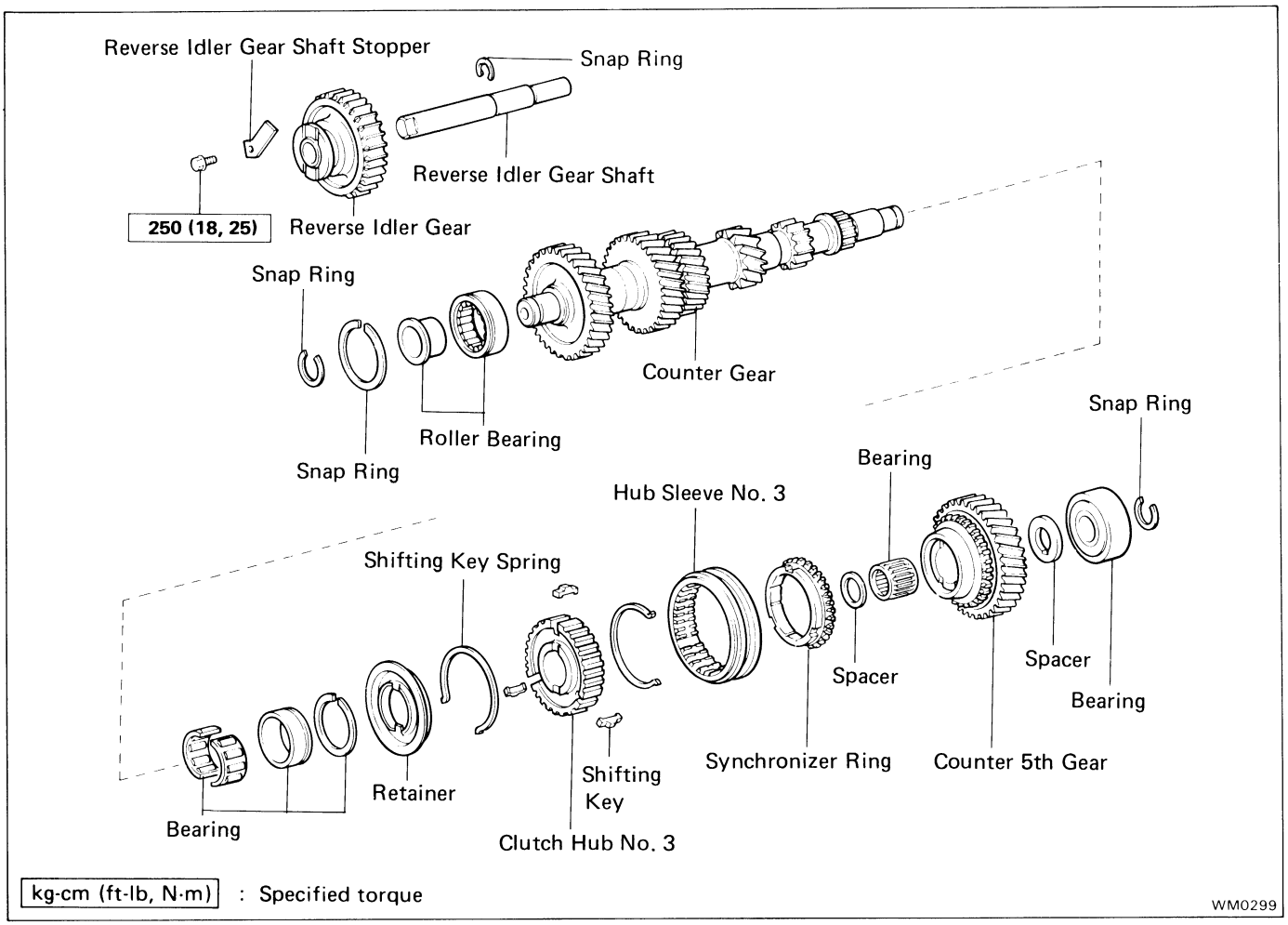

DISASSEMBLY OF COUNTER GEAR ASSEMBLY

REMOVE HUB SLEEVE SHIFTING KEYS AND SPRINGS FROM CLUTCH HUB

(a) Using a screwdriver, remove rear side shifting key spring and three keys and hub sleeve from clutch hub.

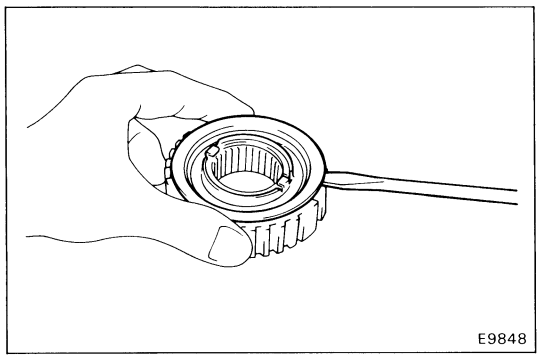

(b) Using a screwdriver, remove retainer and front side shifting key spring.

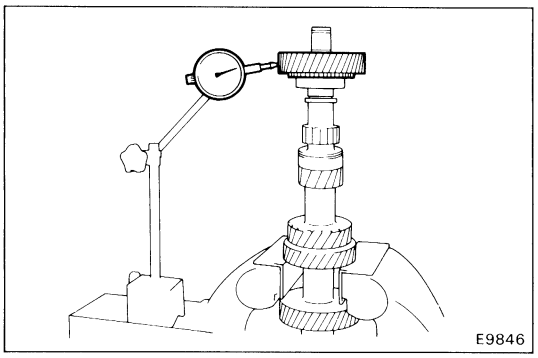

INSPECTION OF COUNTER GEAR

1. MEASURE COUNTER 5TH GEAR OIL CLEARANCE

(a) Install, spacer, counter 5th gear and needle roller bearing to counter gear.

(b) Using a dial indicator, measure counter 5th gear oil clearance.

Standard clearance: 0.009 — 0.062 mm (0.0004 — 0.0024 in.)
Maximum clearance: 0.15 mm (0.0059 in.)

If the clearance exceeds the limit, replace the counter gear or needle roller bearing or counter 5th gear.

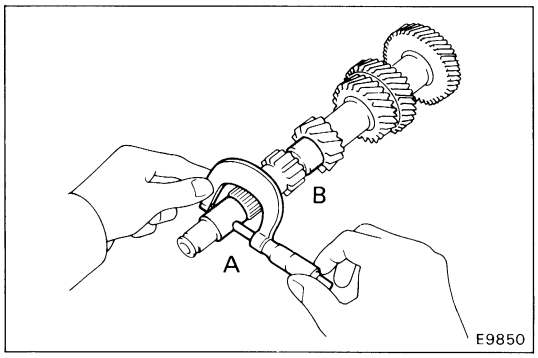

2. INSPECT COUNTER GEAR

(a) Using a micrometer, measure the outer diameter of the counter shaft journal.

Minimum diameter:
Part A 26.835 mm (1.0564 in.)
Part B 29.81 mm (1.1736 in.)

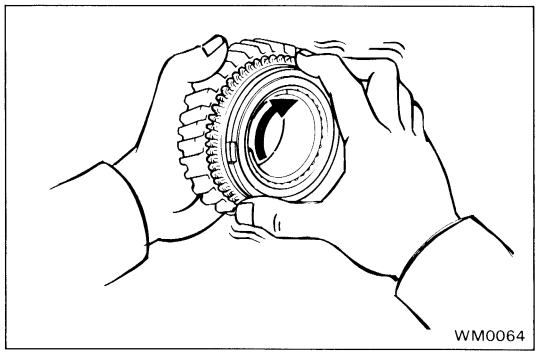

3. INSPECT SYNCHRONIZER RINGS

(a) Turn the ring and push it in to check the braking action.

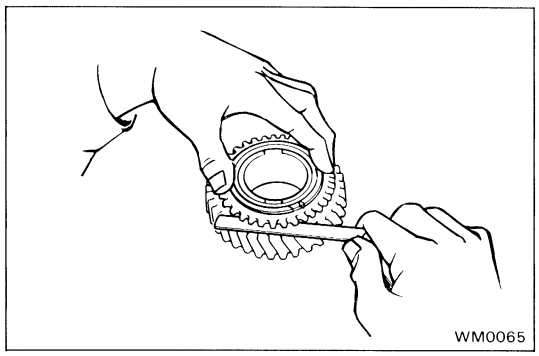

(b) Measure the clearance between the synchronizer ring back and the gear spline end.

Standard clearance: 0.7 — 1.17 mm (0.028 — 0.067 in.)
Minimum clearance: 0.5 mm (0.020 in.)

If the clearance is less than the limit, replace the synchronizer ring.

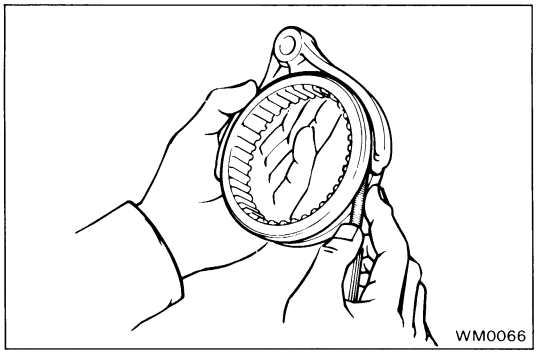

4. MEASURE CLEARANCE OF SHIFT FORKS AND HUB SLEEVES

Using a feeler gauge, measure the clearance between the hub sleeve and shift fork.

Maximum clearance: 1.0 mm (0.039 in.)

If the clearance exceeds the limit, replace the shift fork or hub sleeve.

REPLACEMENT OF BEARING

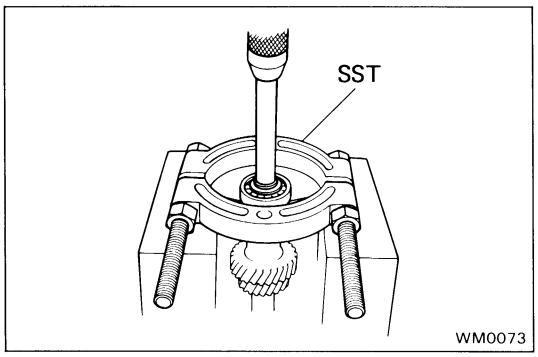

1. IF NECESSARY, REPLACE COUNTER GEAR FRONT BEARING AND SIDE RACE

(a) Using snap ring pliers, remove the snap ring.

(b) Using a press and SST, press out the bearing.

SST 09950-00020

(c) Check the side race for wear or damage.

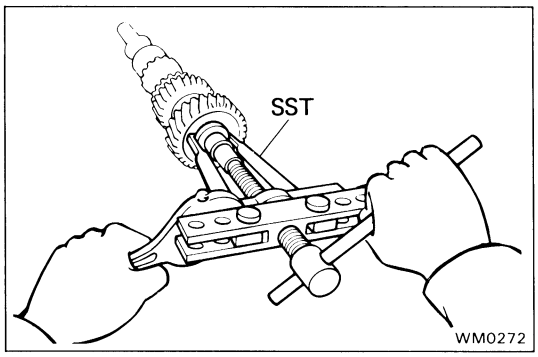

(d) If necessary, remove the side race.

- Using SST and socket wrench, remove the side race.

SST 09950-20017

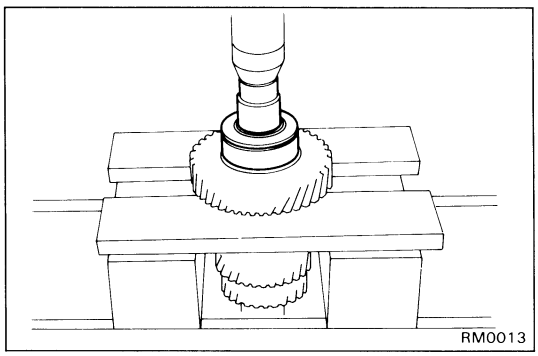

(e) Using a socket wrench, press in a new bearing, side race and inner race.

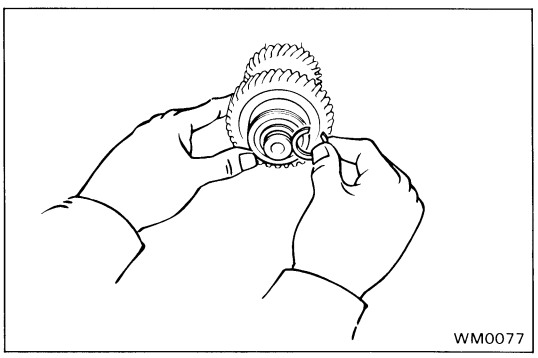

(f) Select a snap ring that will allow minimum axial play and install it on the shaft.

Mark	Thickness mm (in.)
1	2.05 – 2.10 (0.0807 – 0.0827)
2	2.10 – 2.15 (0.0827 – 0.0846)
3	2.15 – 2.20 (0.0846 – 0.0866)
4	2.20 – 2.25 (0.0866 – 0.0886)
5	2.25 – 2.30 (0.0886 – 0.0906)
6	2.30 – 2.35 (0.0906 – 0.0925)
7	2.35 – 2.40 (0.0925 – 0.0945)

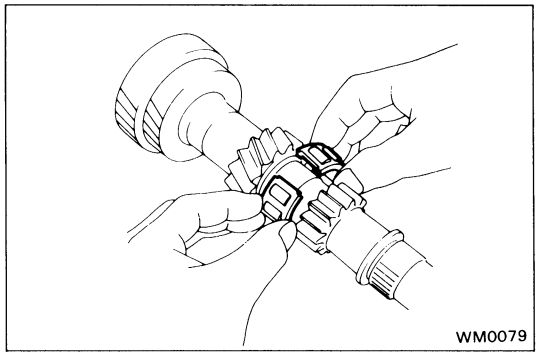

2. IF NECESSARY, REPLACE COUNTER GEAR CENTER BEARING

(a) Remove the bearing from the counter gear.

(b) Install a new bearing on the counter gear.

HINT: Engage the roller cages.

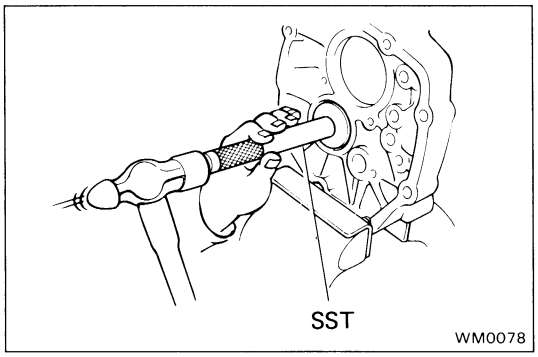

(c) Using SST, tap out the bearing outer race.

SST 09608-35014 (09608-06020, 09608-06090)

HINT: The outer race will be installed later, as the transmission is assembled.

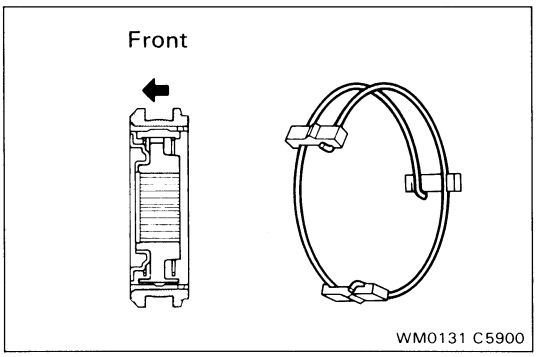

ASSEMBLY OF COUNTER GEAR ASSEMBLY

INSERT NO.3 CLUTCH HUB INTO HUB SLEEVE

(a) Install No.3 clutch hub and the shifting keys to the hub sleeve.

(b) Install the shifting key springs under the shifting keys.

NOTICE: Install the key springs positioned so that their end gaps are not in line.

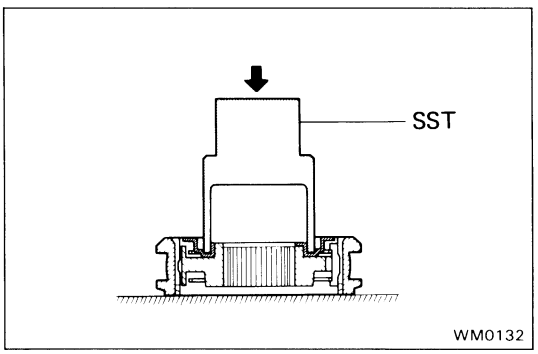

(c) Using SST, install the shifting key retainer.

SST 09238-47012

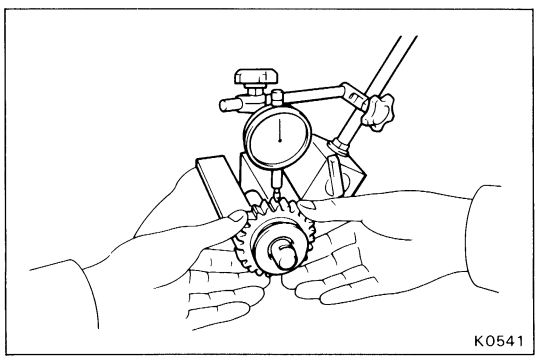

INSPECTION OF REVERSE IDLER GEAR

1. MEASURE REVERSE IDLER GEAR OIL CLEARANCE

Using a dial indicator, measure reverse idler gear oil clearance.

Standard clearance:	**0.041 — 0.074 mm (0.0016 — 0.0029 in.)**
Maximum clearance:	**0.194 mm (0.0076 in.)**

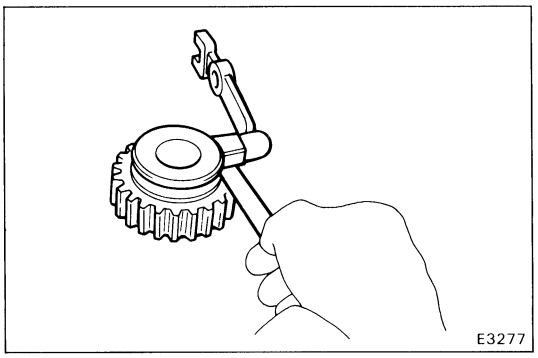

2. **MEASURE CLEARANCE OF REVERSE IDLER GEAR AND SHIFT ARM SHOE**

Using a feeler gauge, measure the clearance between the reverse idler gear and shift arm shoe.

Standard clearance: **0.20 — 0.41 mm (0.008 — 0.0161 in.)**

Maximum clearance: **0.9 mm (0.0354 in.)**

Front Bearing Retainer

COMPONENTS

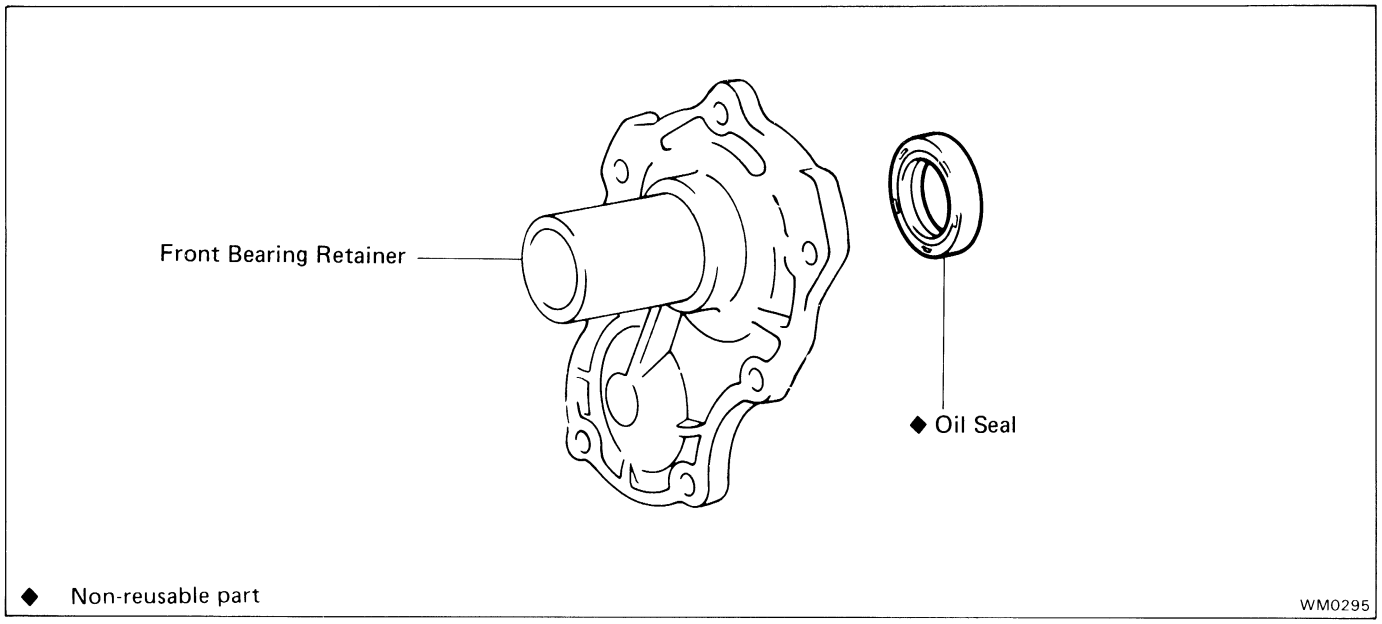

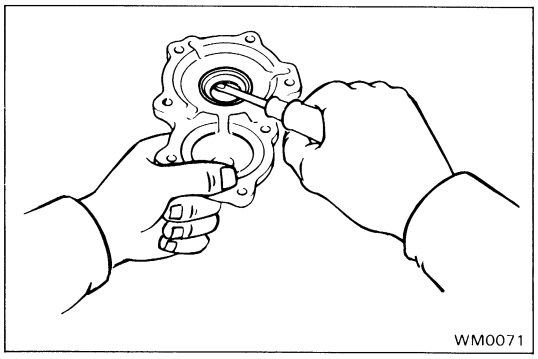

REPLACEMENT OF OIL SEAL

IF NECESSARY, REPLACE FRONT BEARING RETAINER OIL SEAL

(a) Using a screwdriver, pry out the oil seal.

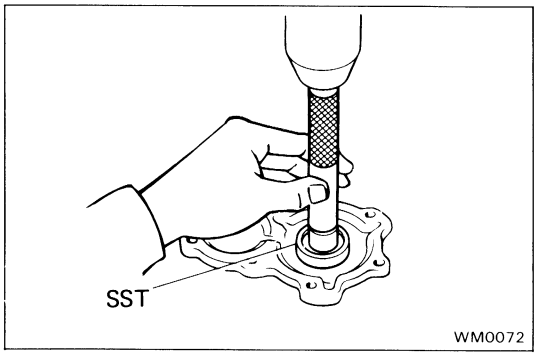

(b) Using SST, press in a new oil seal.

SST 09608-20012 (09608-03020, 09608-00080)

Drive in depth: 11.4 — 12.0 mm from retainer end (0.449 — 0.472 in.)

Extension Housing

COMPONENTS

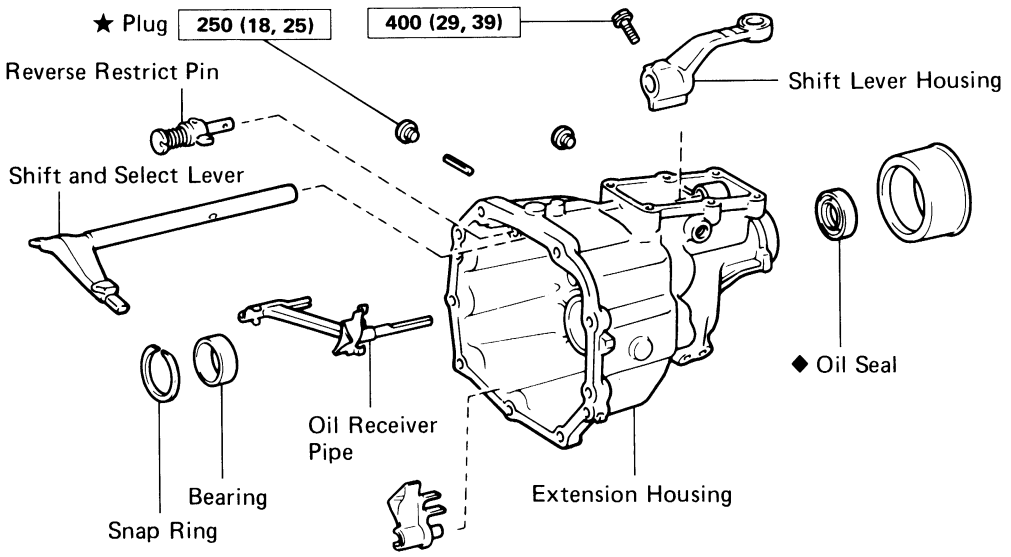

kg-cm (ft-lb, N·m) : Specified torque
◆ Non-reusable part
★ Precoated part

WM0322

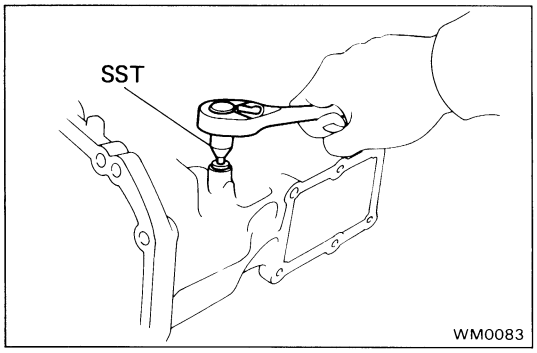

WM0083

REPLACEMENT OF REVERSE RESTRICT PIN

1. **REMOVE REVERSE RESTRICT PIN**
   (a) Using SST, remove the screw plug.
   SST 09313-30021

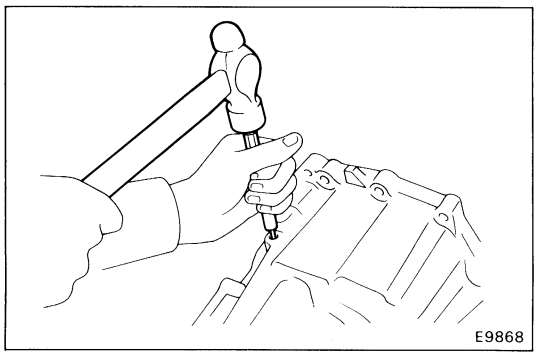

E9868

   (b) Using a pin punch and hammer, drive out the slotted spring pin.
   (c) Pull off the lever housing and slide out the shaft.

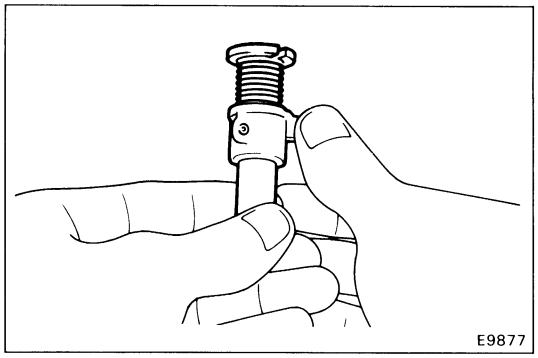

2. INSPECT REVERSE RESTRICT PIN

Turn and push the reverse restrict pin by hand while applying direction.

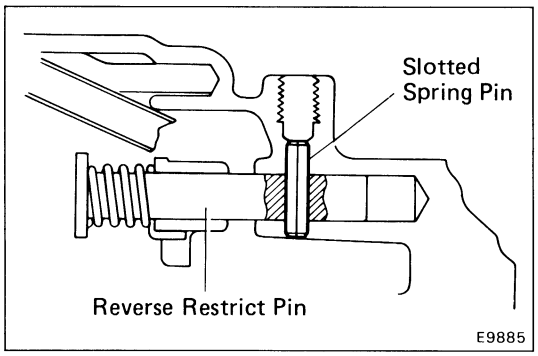

3. INSTALL REVERSE RESTRICT PIN

(a) Install the lever housing.

(b) Using a pin punch and hammer, drive in the slotted spring pin as shown.

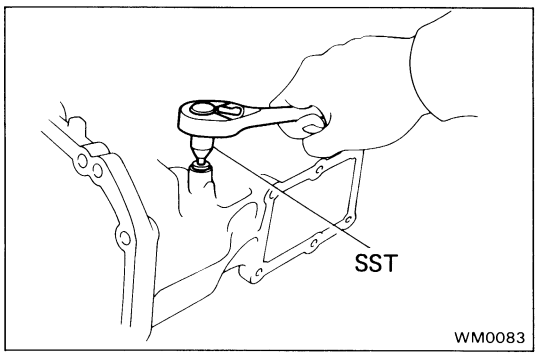

(c) Apply liquid sealer to the plug.

Sealant: Part No. 08833-00080, THREE BOND 1344, LOCTITE 242 or equivalent

(d) Install and torque the screw plug.

Torque: 250 kg-cm (18 ft-lb, 25 N·m)

REPLACEMENT OF BEARING

IF NECESSARY, REPLACE REAR BEARING OUTER RACE

(a) Remove the outer race from the extension housing.

(1) Using two screwdrivers, remove the snap ring.

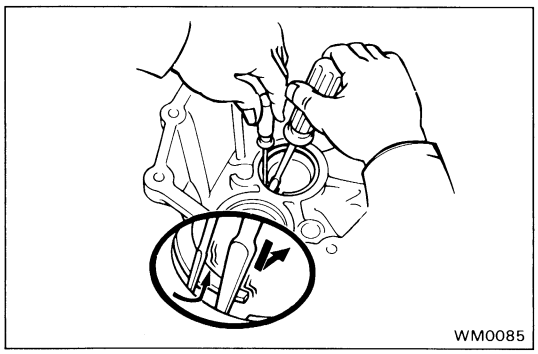

(2) Using SST, tap out the outer race.

SST 09608-12010 (09608-00020, 09608-00050)

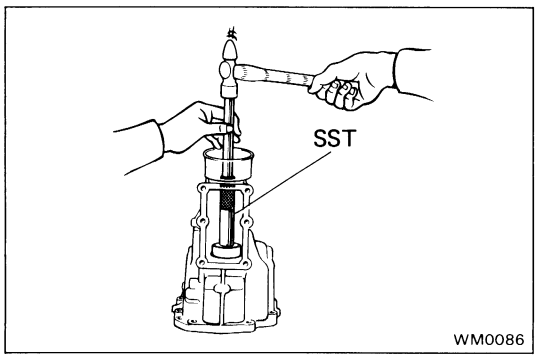

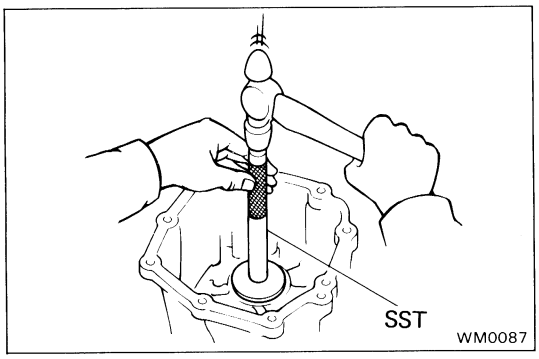

(b) Install the bearing outer race.

(1) Using SST, install a new outer race.

SST 09608-35014 (09608-06020, 09608-06100)

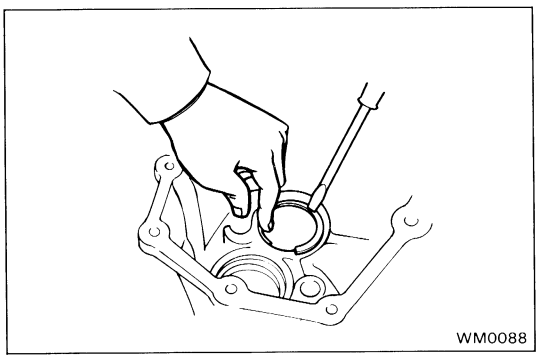

(2) Install the snap ring.

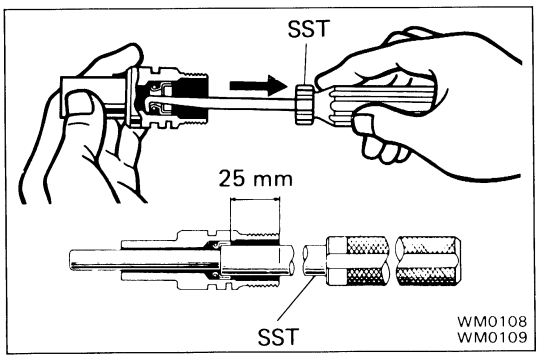

REPLACEMENT OF OIL SEALS

1. IF NECESSARY, REPLACE SPEEDOMETER GEAR OIL SEAL

(a) Using SST, remove the oil seal.

SST 09921-00010

(b) Using SST, install a new oil seal.

SST 09201-60011

Oil seal depth: 25 mm (0.98 in.)

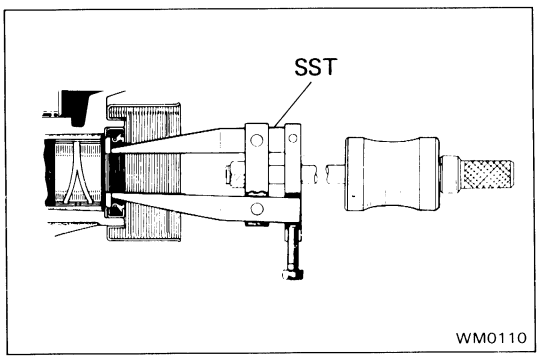

2. IF NECESSARY, REPLACE OIL SEAL

(a) Using SST, remove the oil seal.

SST 09308-00010 or
09308-10010 w/ output shaft installed

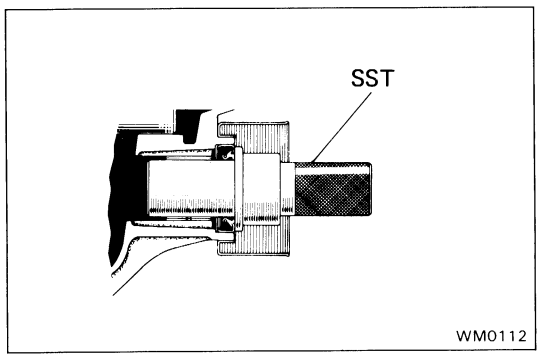

(b) Using SST, drive in a new oil seal.

SST 09325-20010

ASSEMBLY OF TRANSMISSION

(See pages MT-9, 10)

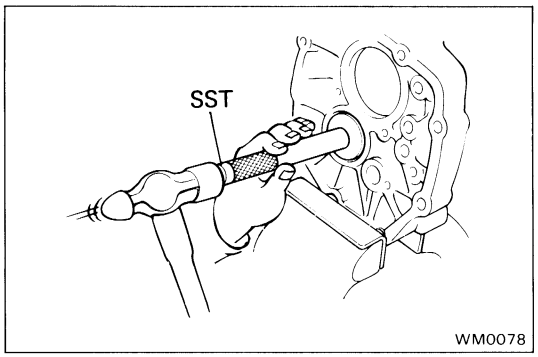

1. INSTALL OUTPUT SHAFT TO INTERMEDIATE PLATE

(a) Before installing the output shaft, use SST to remove the counter gear center bearing outer race.

SST 09608-35014 (09608-06020, 09608-06090)

HINT: Install the outer race after installing the counter gear.

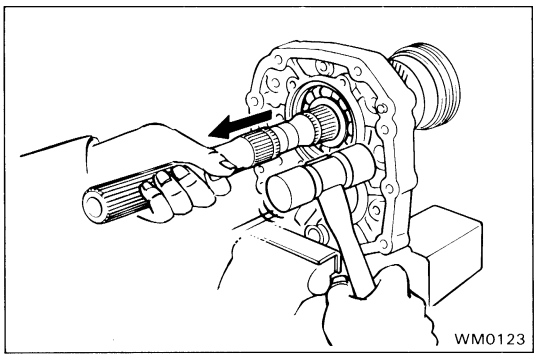

(b) Install the output shaft into the intermediate plate by pulling on the output shaft and tapping on the intermediate plate.

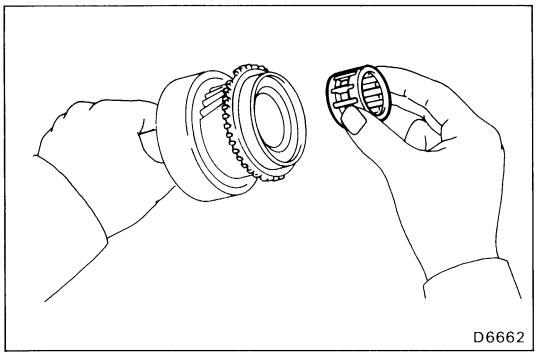

2. INSTALL INPUT SHAFT AND COUNTER GEAR

(a) Apply gear oil to the needle roller bearing.

(b) Install needle roller bearing to the input shaft.

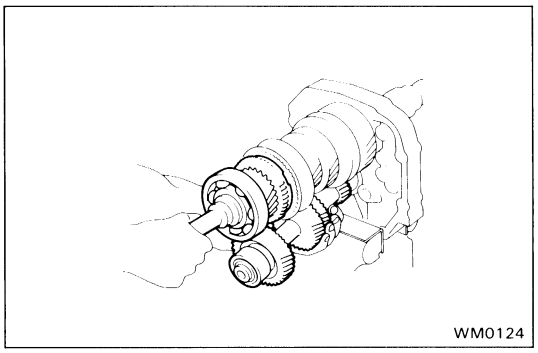

(c) Install the input shaft and counter gear together.

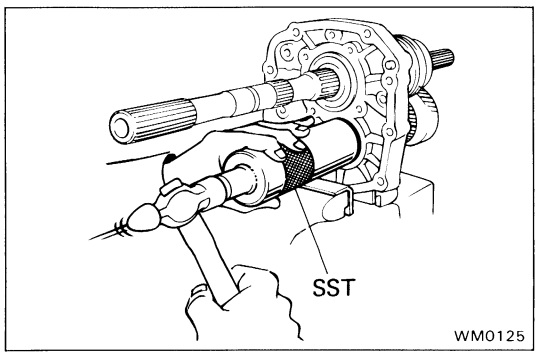

(d) Using SST, install the counter gear center bearing outer race.

SST 09316-60010 (09316-00010)

HINT: Be careful not to damage the bearing rollers.

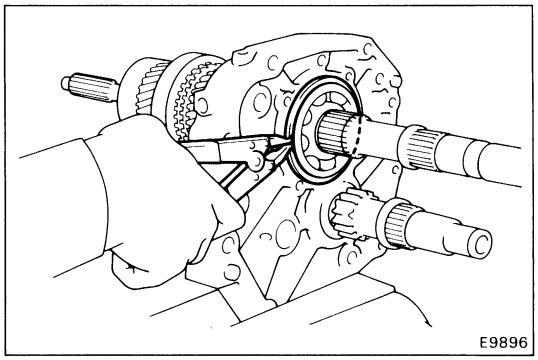

3. INSTALL BEARING RETAINER

(a) Using snap ring pliers, install the bearing snap ring.

HINT: Be sure the snap ring is flush with the intermediate plate surface.

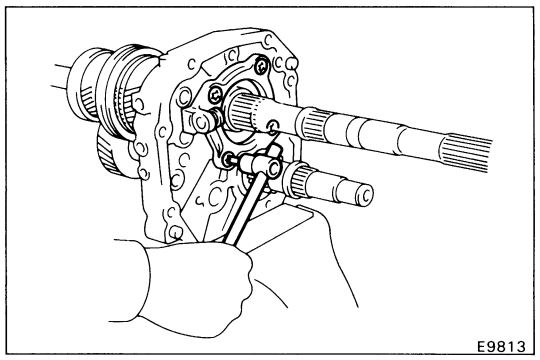

(b) Using a torx socket wrench, tighten the screws.

Torque: 130 kg-cm (9 ft-lb, 13 N·m)

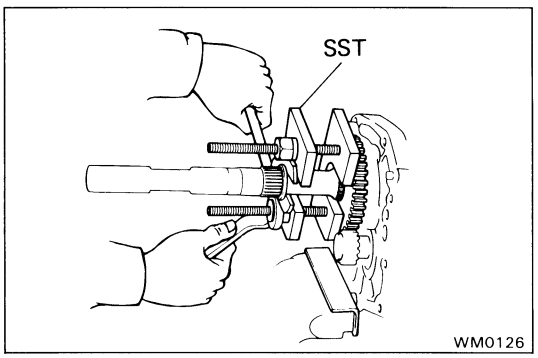

4. INSTALL REVERSE GEAR

Using SST, install the reverse gear.

SST 09312-20011

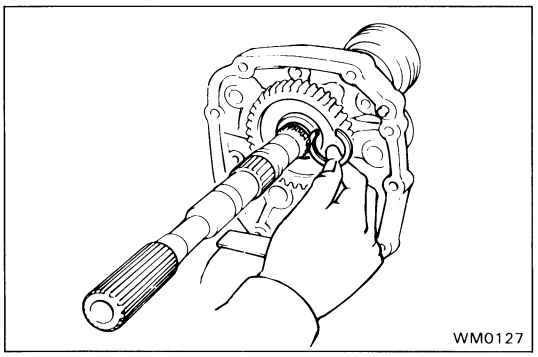

5. INSTALL SNAP RING

(a) Select a snap ring that will allow minimum axial play.

Mark	Thickness mm (in.)	Mark	Thickness mm (in.)
5	2.25 – 2.30 (0.0886 – 0.0906)	17	2.61 – 2.66 (0.1028 – 0.1047)
11	2.30 – 2.35 (0.0906 – 0.0925)	18	2.67 – 2.72 (0.1051 – 0.1071)
12	2.35 – 2.40 (0.0925 – 0.0945)	19	2.73 – 2.78 (0.1075 – 0.1094)
13	2.40 – 2.45 (0.0945 – 0.0965)	20	2.79 – 2.84 (0.1098 – 0.1118)
14	2.45 – 2.50 (0.0965 – 0.0984)	21	2.85 – 2.90 (0.1122 – 0.1142)
15	2.50 – 2.55 (0.0984 – 0.1004)	22	2.91 – 2.96 (0.1146 – 0.1165)
16	2.55 – 2.60 (0.1004 – 0.1024)	23	2.97 – 3.02 (0.1169 – 0.1189)

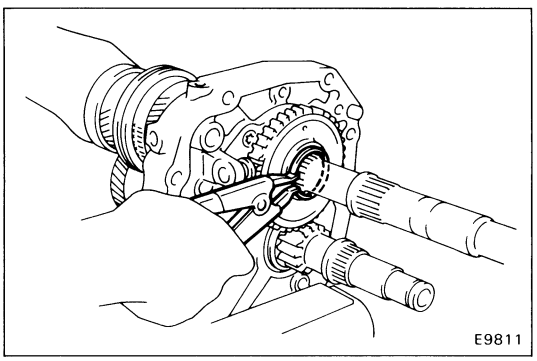

(b) Using a snap ring pliers, install snap ring.

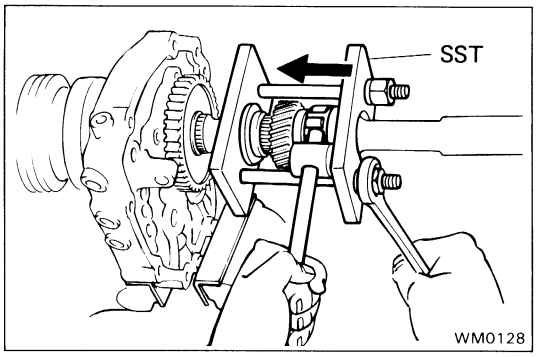

6. INSTALL FIFTH GEAR AND OUTPUT SHAFT REAR BEARING

Using SST, install the 5th gear and rear bearing.

SST 09312-20011

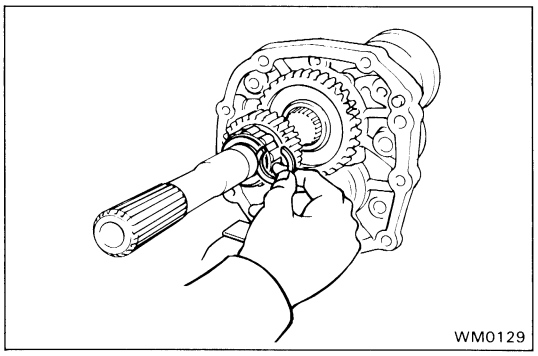

7. INSTALL SNAP RING

(a) Select a snap ring that will allow minimum axial play.

Mark	Thickness mm (in.)	Mark	Thickness mm (in.)
8	2.31 – 2.36 (0.0909 – 0.0929)	12	2.55 – 2.60 (0.1004 – 0.1024)
9	2.37 – 2.42 (0.0933 – 0.0953)	13	2.61 – 2.66 (0.1028 – 0.1047)
10	2.43 – 2.48 (0.0957 – 0.0976)	14	2.68 – 2.73 (0.1055 – 0.1075)
11	2.49 – 2.54 (0.0980 – 0.1000)	15	2.74 – 2.79 (0.1079 – 0.1098)

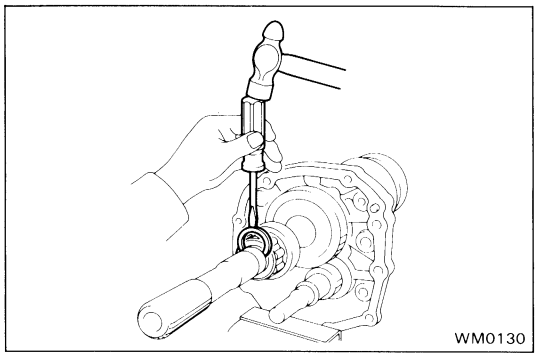

(b) Using a screw driver and hammer, install snap ring.

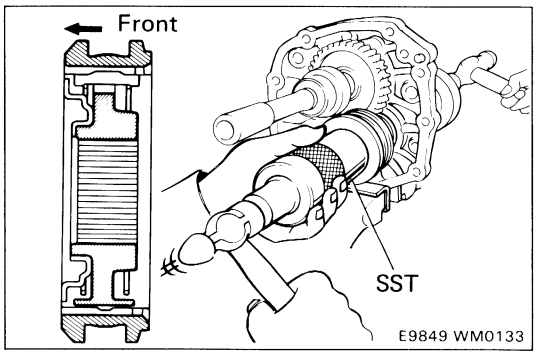

8. INSTALL NO.3 CLUTCH HUB

Using SST, drive in No.3 clutch hub.

SST 09316-60010 (09316-00010, 09316-00070)

HINT: When installing the clutch hub, support the countershaft in front with a 3-5 lb hammer or equivalent.

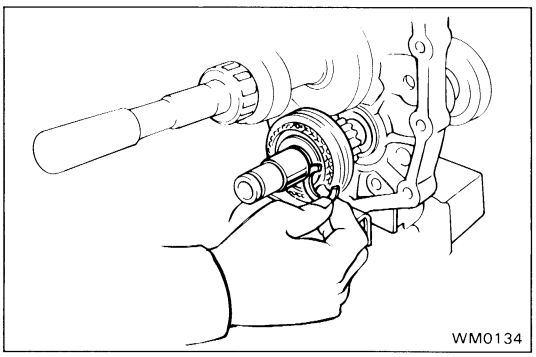

9. INSTALL SNAP RING

(a) Select a snap ring that will allow minimum axial play.

Mark	Thickness mm (in.)
2	2.06 – 2.11 (0.0811 – 0.0831)
3	2.12 – 2.17 (0.0835 – 0.0854)
4	2.18 – 2.23 (0.0858 – 0.0878)
5	2.24 – 2.29 (0.0882 – 0.0902)

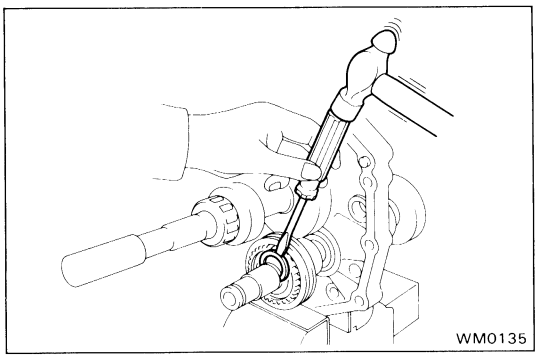

(b) Using a screwdriver and hammer, install snap ring.

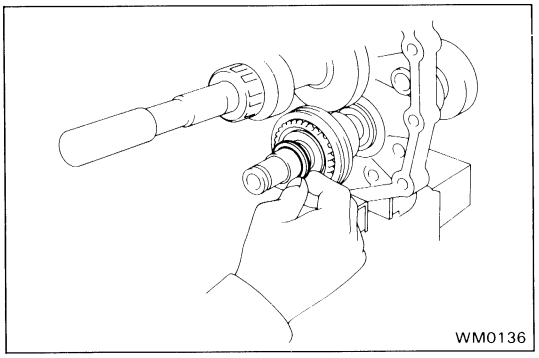

10. INSTALL SPACER, SYNCHRONIZER RING, NEEDLE ROLLER BEARING AND COUNTER FIFTH GEAR

(a) Install the bearing spacer.

(b) Apply gear oil to the needle roller bearings.

(c) Assemble the counter 5th gear, synchronizer ring and needle roller bearings.

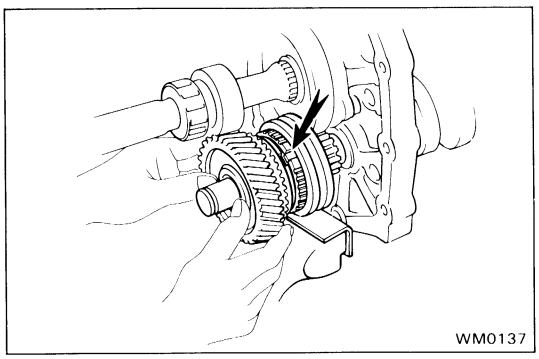

(d) Install the 5th gear assembly with the synchronizer ring slots aligned with the shifting keys.

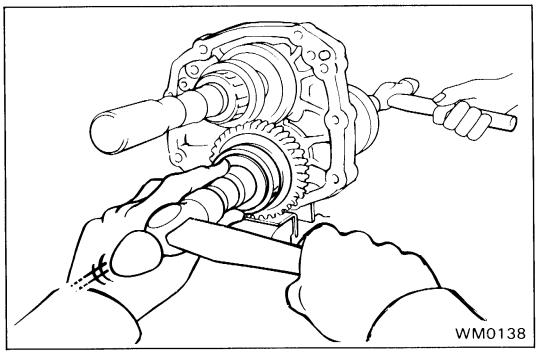

11. INSTALL SPACER AND BEARING

(a) Install the spacer.

(b) Install the bearing with the ball shield toward the rear.

(c) Using a hammer and socket wrench, drive in the bearing.

HINT: When driving in the bearing, support the countershaft in front with a 3-5 lb hammer or equivalent.

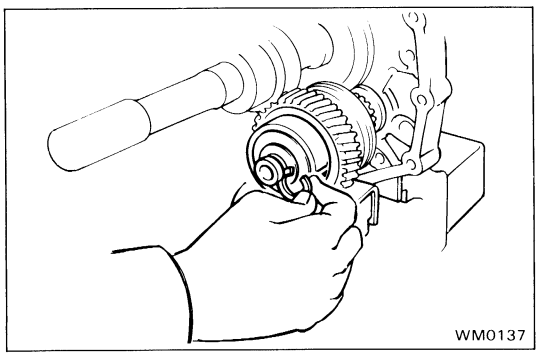

12. INSTALL SNAP RING

(a) Select a snap ring that will allow minimum axial play.

Mark	Thickness mm (in.)	Mark	Thickness mm (in.)
1	1.90 – 1.95 (0.0748 – 0.0768)	5	2.14 – 2.19 (0.0843 – 0.0862)
2	1.96 – 2.01 (0.0772 – 0.0791)	6	2.20 – 2.25 (0.0866 – 0.0886)
3	2.02 – 2.07 (0.0795 – 0.0815)	7	2.26 – 2.31 (0.0890 – 0.0909)
4	2.08 – 2.13 (0.0819 – 0.0839)		

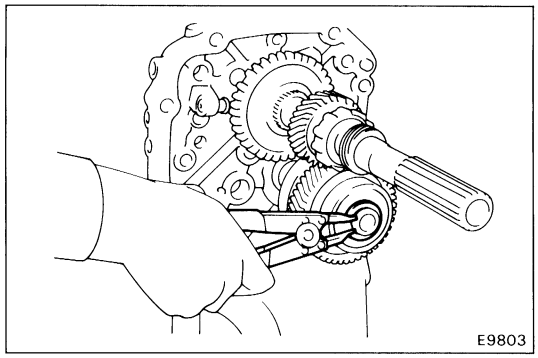

(b) Using a snap ring pliers, install snap ring.

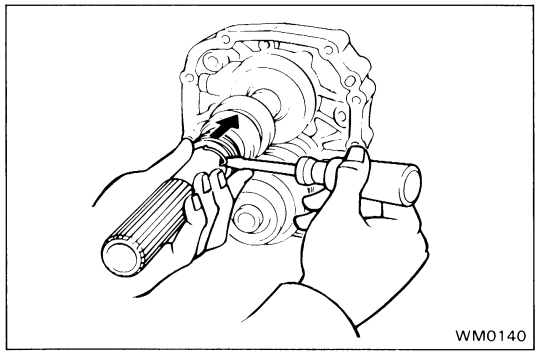

13. INSTALL SPEEDOMETER DRIVE GEAR

(a) Put a clip on the output shaft and install the drive gear clip into the slot.

(b) Slide the drive gear with clip and fit the clip into the holes.

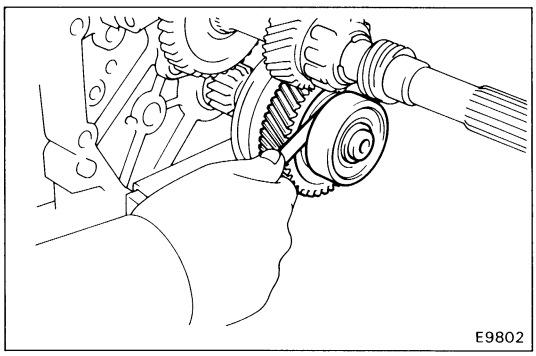

14. MEASURE COUNTER FIFTH GEAR THRUST CLEARANCE

Using a feeler gauge, measure counter 5th gear thrust clearance.

Standard clearance: 0.10 — 0.41 mm (0.0039 — 0.0161 in.)

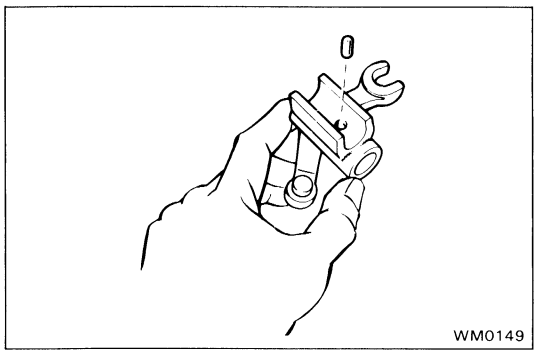

15. INSTALL SHIFT FORKS, SHIFT FORK SHAFTS AND REVERSE IDLER GEAR

(a) Install the reverse idler gear and shaft.

(b) Install No.3 shift fork, No.3 fork shaft and reverse shift arm.

(1) Coat the pin with MP grease and insert it into the reverse shift head hole.

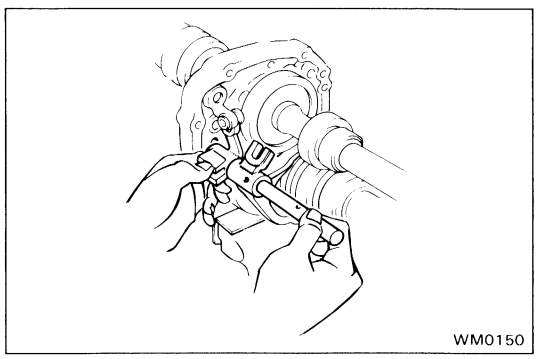

(2) Insert No.3 shift fork shaft through No.3 shift fork and the reverse shift arm.

(3) Align No.3 shift fork with the No.3 hub sleeve groove, put the reverse shift arm into the pivot of bearing retainer and align the reverse shift arm shoe with the reverse idler gear groove.Install No.3 shift fork shaft to the intermediate plate.

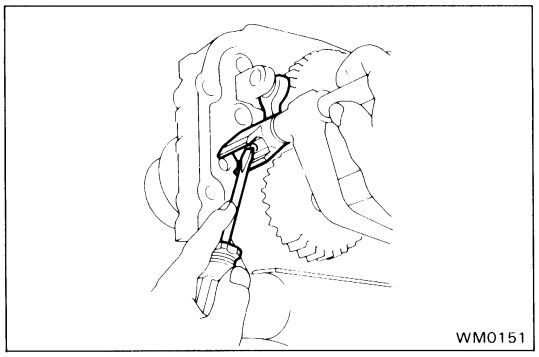

(c) Install No.4 shift fork shaft.

(1) Push the pin, which was inserted into the reverse shift arm hole, into the groove of No.3 shift fork shaft.

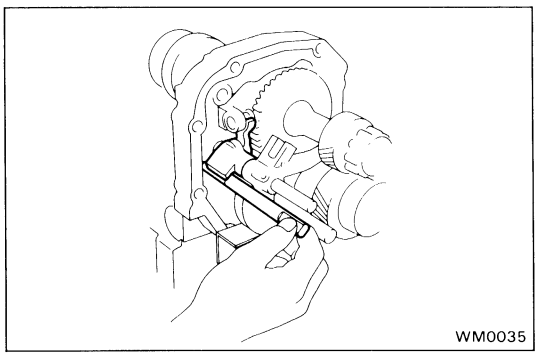

(2) Insert No.3 shift fork shaft through No.3 shift fork and the reverse shift arm.

(3) Align No.3 shift fork with the No.3 hub sleeve groove, put the reverse shift arm into the pivot of bearing retainer and align the reverse shift arm shoe with the reverse idler gear groove. Install No.3 shift fork shaft to the intermediate plate.

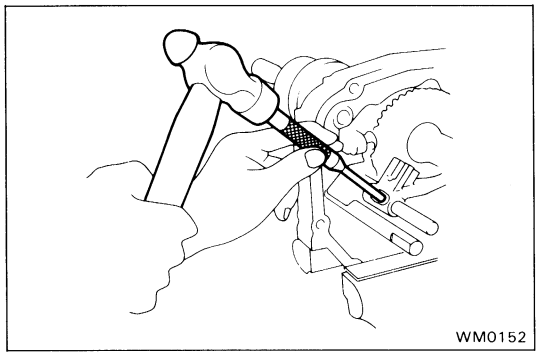

(d) Using a pin punch and hammer, drive in the slotted spring pin until it is flush with the fork.

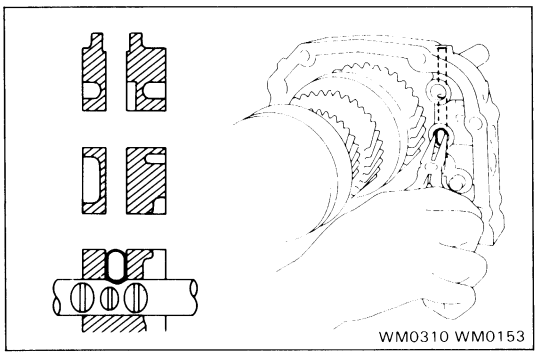

(e) Apply MP grease No.3 interlock pin and install the pin into the intermediate plate hole.

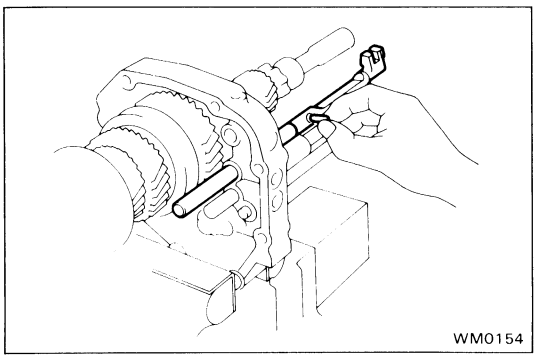

(f) Install No.2 shift fork and fork shaft.

(1) Apply MP grease to No.2 interlock pin and install the pin into the shaft hole.

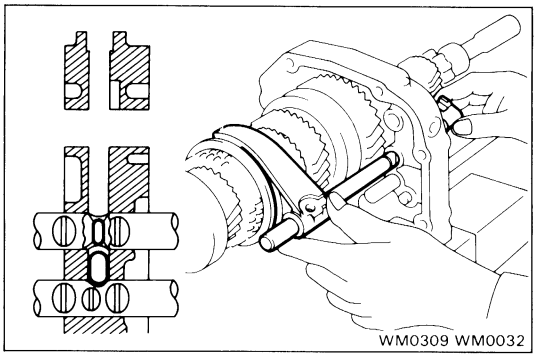

(2) Place No.2 shift fork into the groove of No.2 hub sleeve.

(3) Install No.2 fork shaft to the shift fork through the intermediate plate.

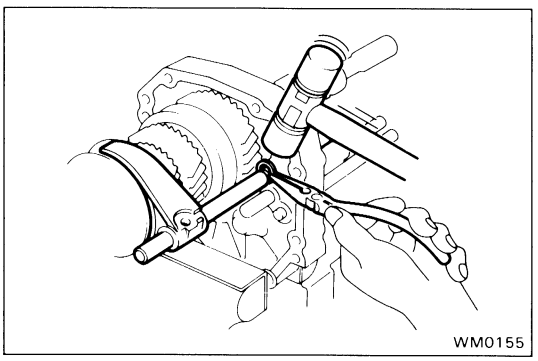

(g) Install the snap ring of No.2 fork shaft.

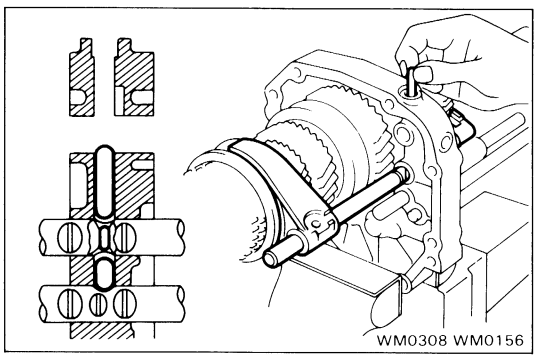

(h) Apply MP grease to No.1 interlock pin and install the pin into the intermediate plate.

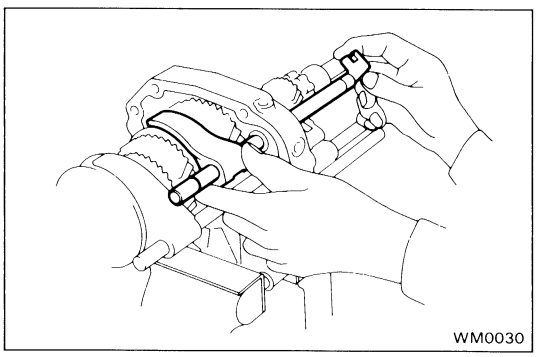

(i) Install No.1 shift fork and fork shaft.

(1) Install No.1 shift fork into the groove of No.1 hub sleeve.

(2) Insert No.1 fork shaft to the shift fork through the intermediate plate.

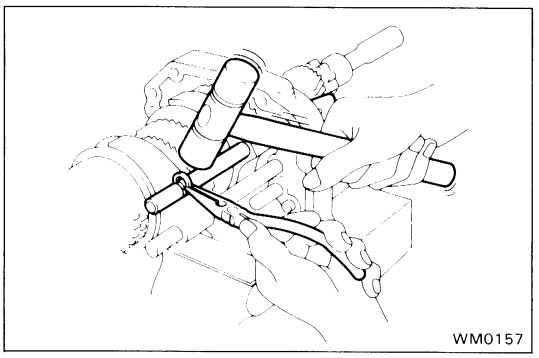

(j) Install the snap ring of No.1 fork shaft.

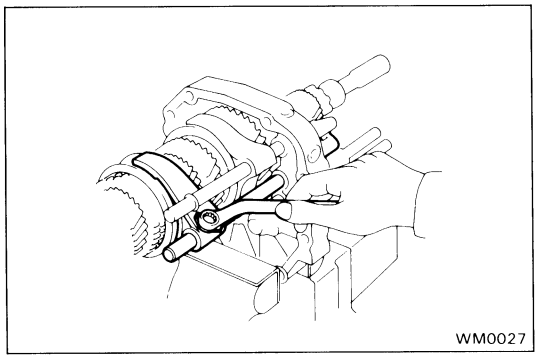

(k) Install the No.1 and No.2 shift fork set bolts with lock washers.

Torque: 125 kg-cm (9 ft-lb, 12 N·m)

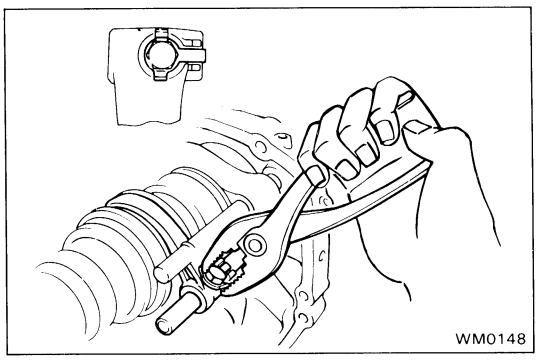

(l) Using pliers, stake the bolts with lock washers.

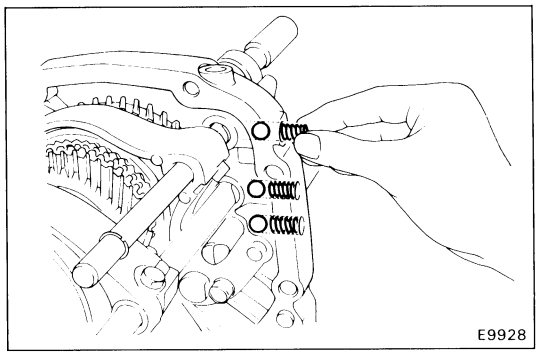

16. INSTALL LOCKING BALL AND SPRING

(a) Install the balls and spring into each hole.

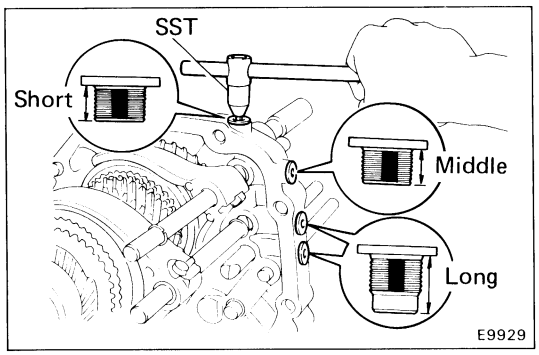

(b) Apply liquid sealer to the plug threads.

Sealant: Part No. 08833-00080, THREE BOND 1344, LOCTITE 242 or equivalent

(c) Using SST, tighten the four plugs.

SST 09313-30021

Torque: 250 kg-cm (18 ft-lb, 25 N·m)

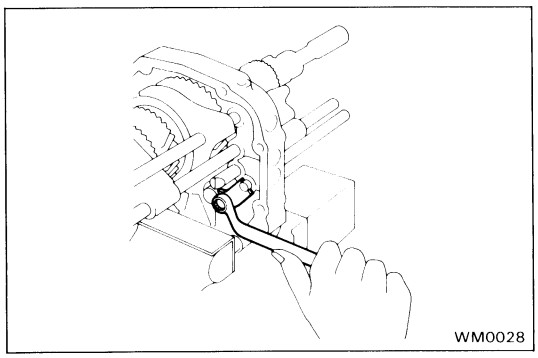

17. INSTALL REVERSE IDLER GEAR SHAFT STOPPER

Install the reverse idler gear shaft stopper and tighten the bolt.

Torque: 250 kg-cm (18 ft-lb, 25 N·m)

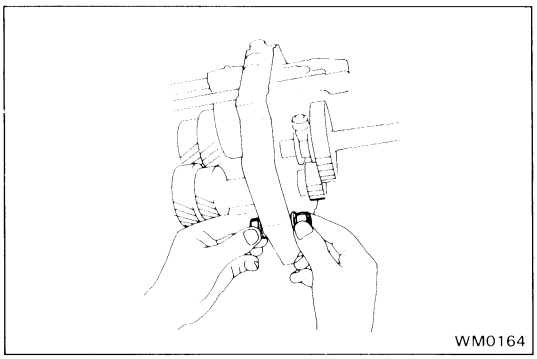

18. DISMOUNT INTERMEDIATE PLATE FROM VISE

(a) Dismount the intermediate plate from the vise.

(b) Remove the bolts, nuts, plate washers and gasket.

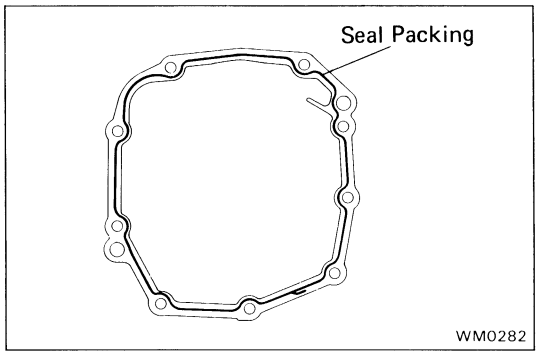

19. INSTALL TRANSMISSION CASE TO INTERMEDIATE PLATE

(a) Apply seal packing to the transmission case as shown.

Seal packing: Part No. 08826-00090, THREE BOND 1281 or equivalent

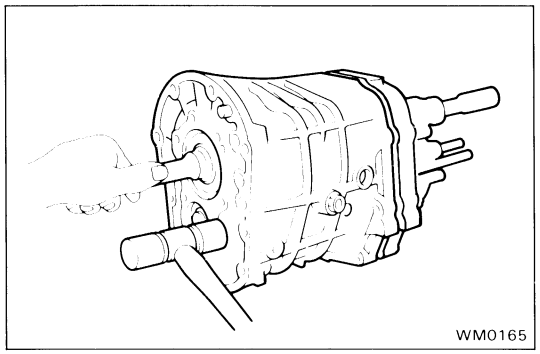

(a) Align each bearing outer race and each shift fork shaft end with the case holes.

(b) Using a plastic hammer, tap on the case to install it.

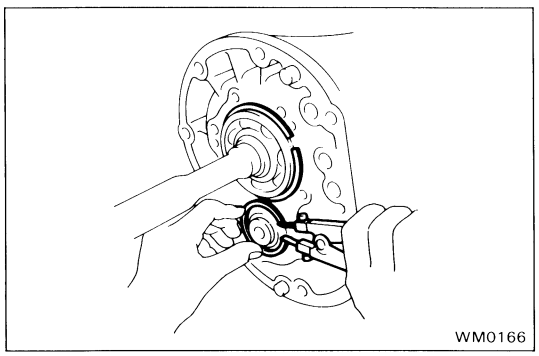

20. INSTALL BEARING SNAP RINGS

Using snap ring pliers, install the two snap rings.

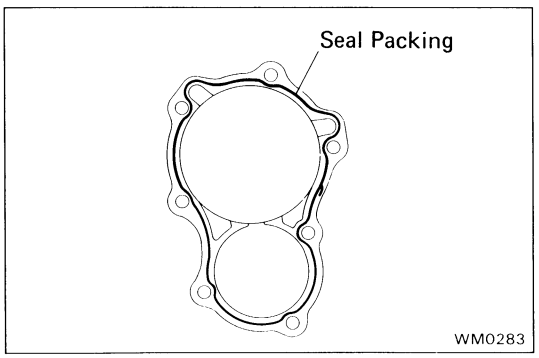

21. INSTALL FRONT BEARING RETAINER

(a) Apply seal packing to the retainer as shown, and install it to the transmission case.

Seal packing: Part No. 08826-00090, THREE BOND 1281 or equivalent

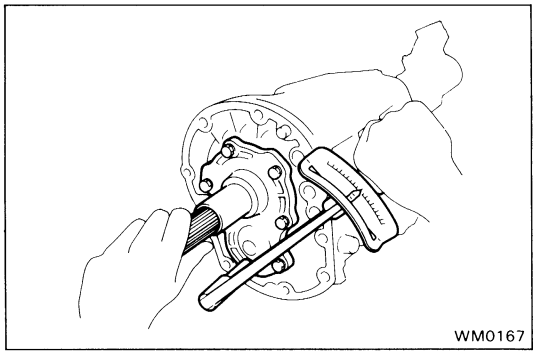

(b) Apply liquid sealer to the bolt threads.

Sealant: Part No. 08833-00080, THREE BOND 1344, LOCTITE 242 or equivalent

(c) Install and torque the bolts.

Torque: 250 kg-cm (18 ft-lb, 25 N·m)

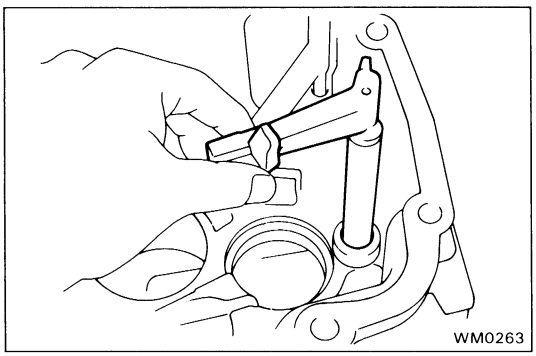

22. INSTALL EXTENSION HOUSING

(a) Insert shift and select lever into the extension housing.

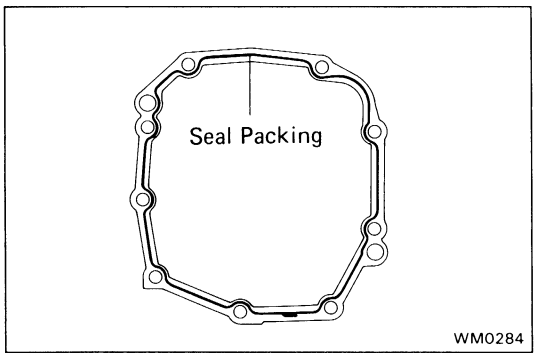

(b) Apply seal packing to the extension housing.

Seal packing: Part No. 08826-00090, THREE BOND 1281 or equivalent

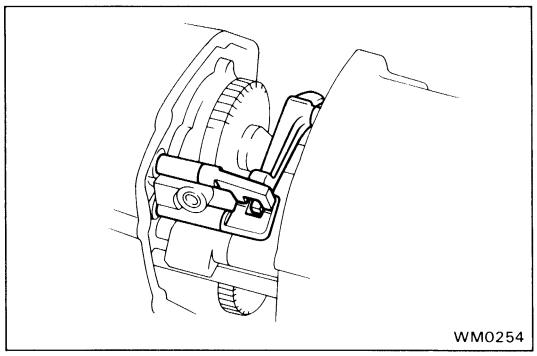

(c) Connect the shift and select lever to the shift fork shaft.

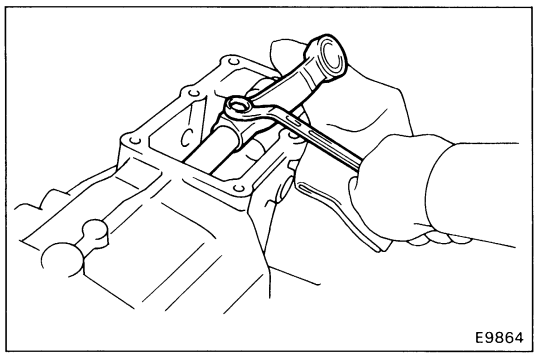

(d) Install shift lever housing to shift and select lever shaft, push in the extension housing.

(e) Install and torque the bolt.

Torque: 400 kg-cm (29 ft-lb, 39 N·m)

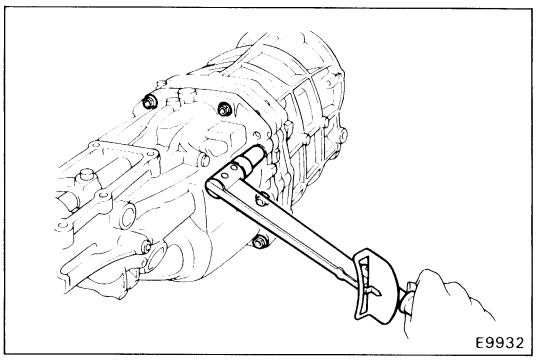

(f) Install nine bolts to the extension housing.

(g) Torque the bolts.

Torque: 375 kg-cm (27 ft-lb, 37 N·m)

23. AFTER INSTALLING EXTENSION HOUSING, CHECK FOLLOWING ITEMS:

(a) Check to see that input shaft and output shaft rotate smoothly.

(b) Check to see that shifting can be made smoothly to all positions.

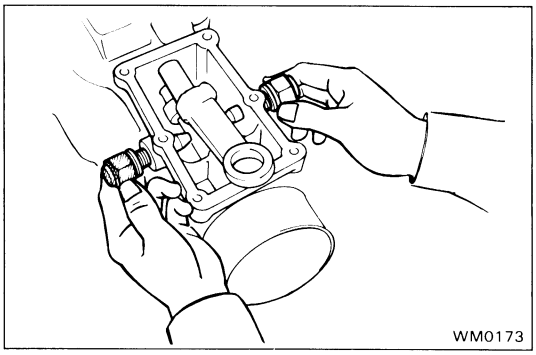

24. INSTALL RESTRICT PINS

(a) Install the restrict pins together with a gasket.

HINT: Install the black pin on the reverse gear/5th gear side.

(b) Torque the restrict pins.

Torque: 410 kg-cm (30 ft-lb, 40 N·m)

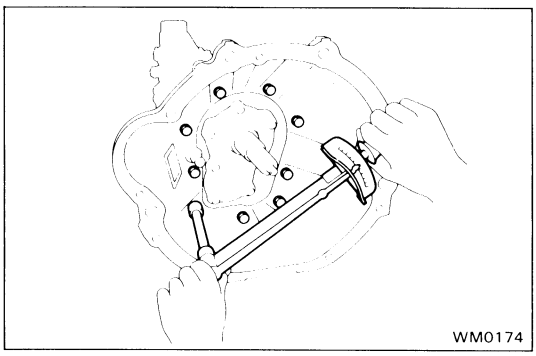

25. INSTALL CLUTCH HOUSING

(a) Install the clutch housing.

(b) Install and torque the nine bolts.

Torque: 375 kg-cm (27 ft-lb, 37 N·m)

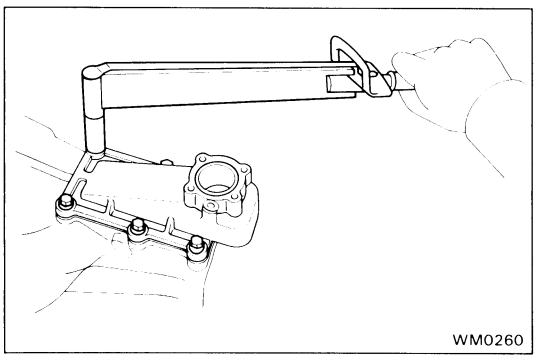

26. INSTALL SHIFT LEVER RETAINER

(a) Install the shift lever retainer with a oil baffle.

(b) Install and torque the six bolts.

Torque: 185 kg-cm (13 ft-lb, 18 N·m)

27. INSTALL SPEEDOMETER DRIVEN GEAR

(a) Install the speedometer driven gear.

(b) Install the bolt with lock plate.

(c) Torque the bolt.

Torque: 130 kg-cm (9 ft-lb, 13 N·m)

28. INSTALL BACK-UP LIGHT SWITCH

(a) Install and torque the back-up light switch.

Torque: 410 kg-cm (30 ft-lb, 40 N·m)

(b) Install the wire clamp.

29. INSTALL REAR SPEED SENSOR (w/ A.B.S.)

Components (R154 Transmission)

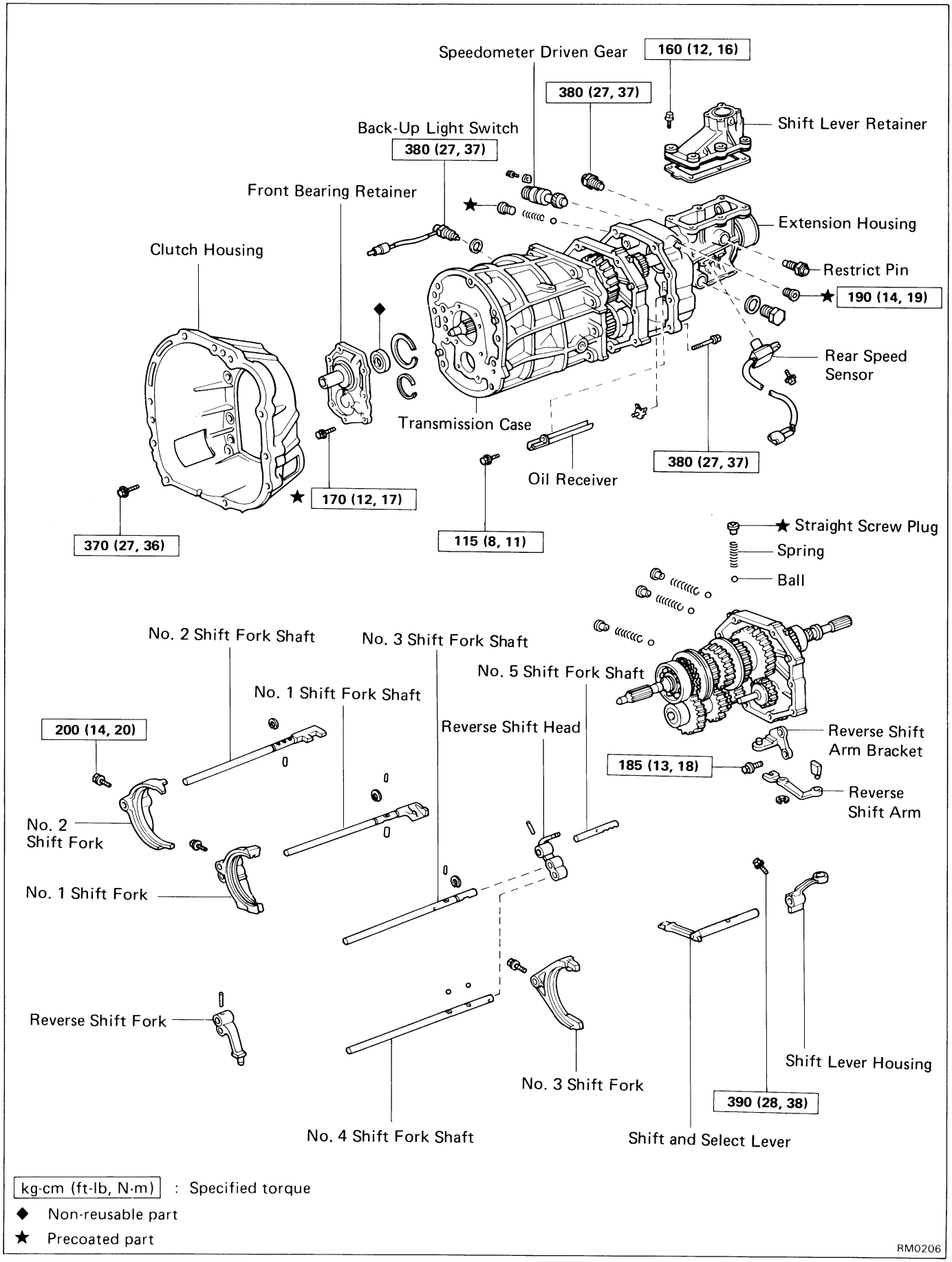

Components (Cont'd)

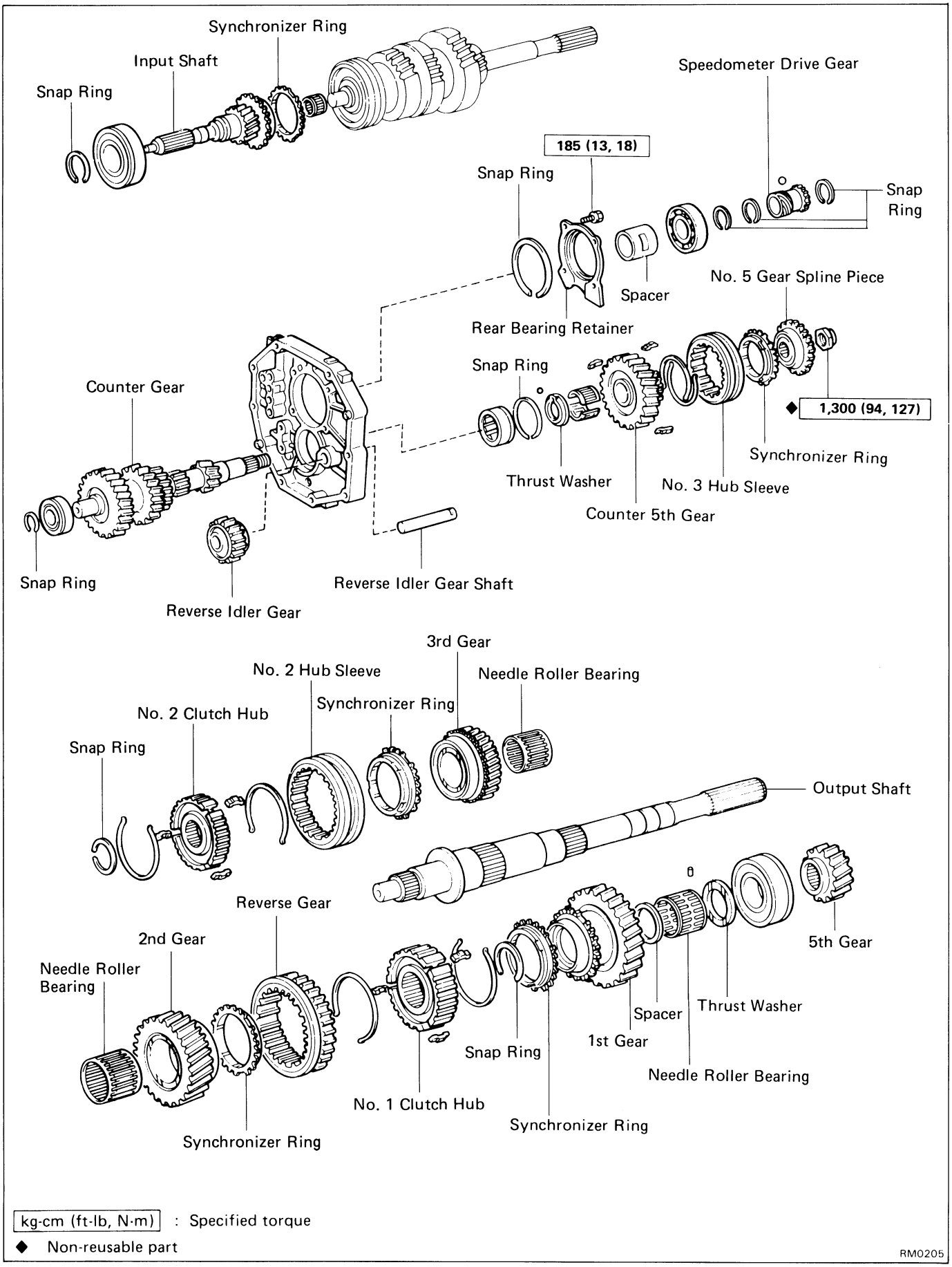

kg-cm (ft-lb, N·m) : Specified torque

◆ Non-reusable part

RM0205

DISASSEMBLY OF TRANSMISSION

(See pages MT-49, 50)

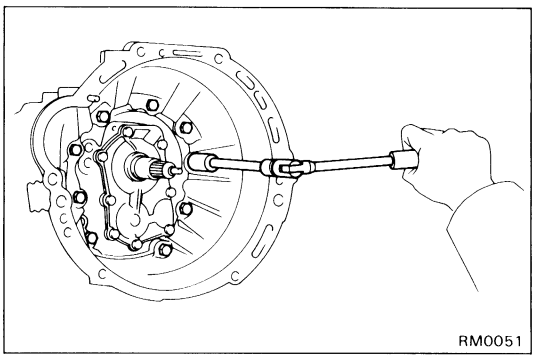
RM0051

1. **REMOVE RELEASE FORK AND BEARING**

2. **REMOVE BACK-UP LIGHT SWITCH, SPEEDOMETER DRIVEN GEAR, SHIFT LEVER RETAINER, REAR SPEED SENSOR (w/ A.B.S.) AND RESTRICT PINS**

3. **REMOVE CLUTCH HOUSING FROM TRANSMISSION CASE**

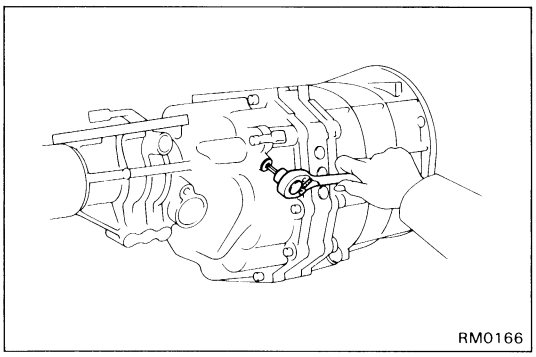
RM0166

4. **REMOVE STRAIGHT SCREW PLUG, SPRING AND BALL**
   (a) Using a torx socket wrench, remove the screw plug from the transfer adaptor.

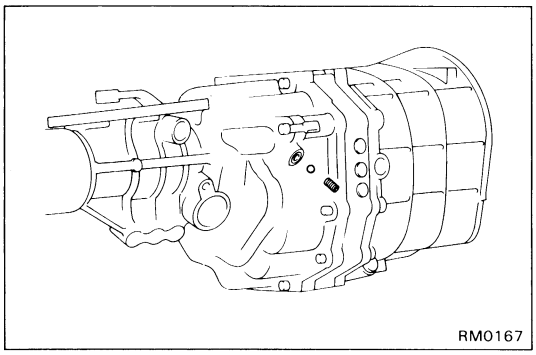
RM0167

   (b) Using a magnetic finger, remove the spring and ball.

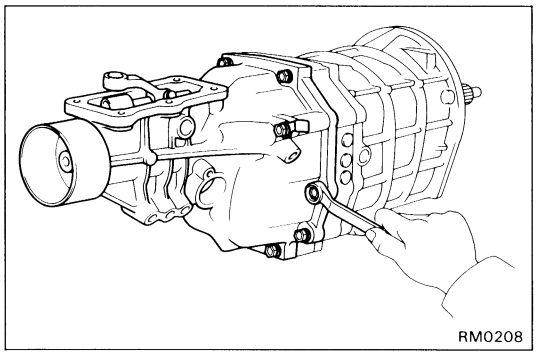
RM0208

5. **REMOVE EXTENSION HOUSING**
   (a) Remove the ten bolts.

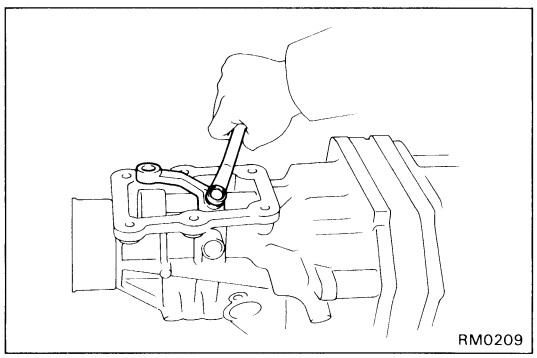
RM0209

   (b) Remove the shift lever housing set bolt.
   (c) Using a plastic hammer, tap the extension housing and remove the shift lever housing and shift and select lever.

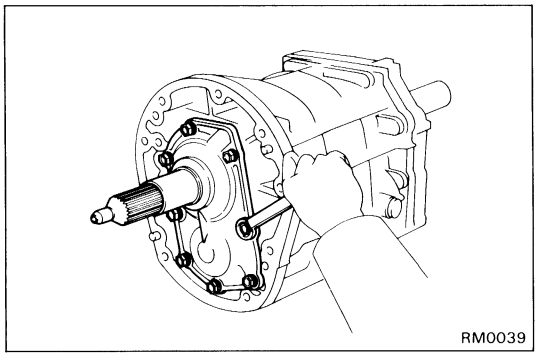

6. REMOVE FRONT BEARING RETAINER

(a) Remove the eight bolts.

(b) Using a plastic hammer, tap the front bearing retainer.

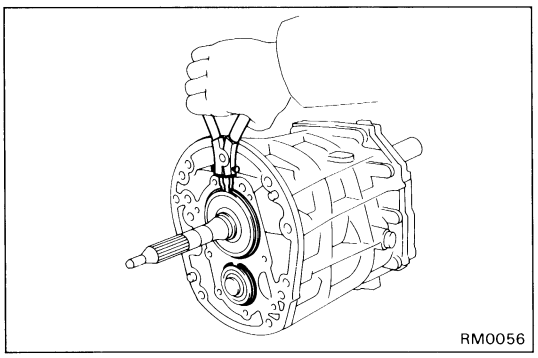

7. REMOVE BEARING SNAP RINGS

Using snap ring pliers, remove the two snap rings.

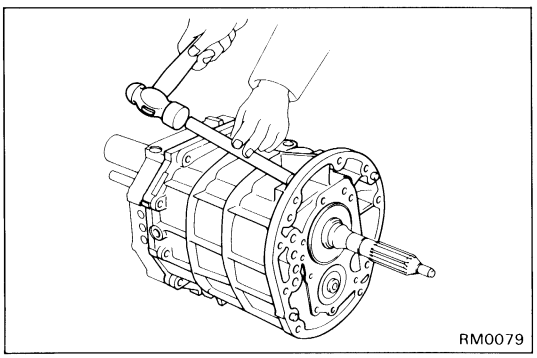

8. SEPARATE INTERMEDIATE PLATE FROM TRANSMISSION CASE

(a) Using a brass bar and hammer, carefully tap off the transmission case.

(b) Remove the transmission case from the intermediate plate.

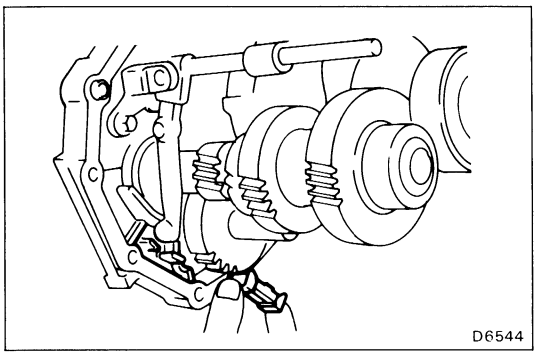

9. REMOVE MAGNET FROM INTERMEDIATE PLATE

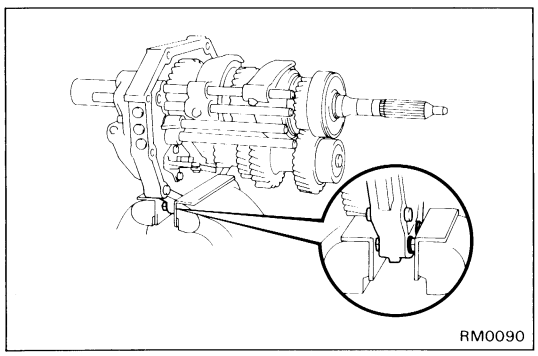

10. MOUNT INTERMEDIATE PLATE IN VISE

(a) Use two clutch housing bolts, plate washers and suitable nuts as shown.

NOTICE: Install the plate washers in reverse of normal. Increase or decrease plate washers so that the bolt tip and front tip surface of the nut are aligned.

(b) Mount the intermediate plate in a vise.

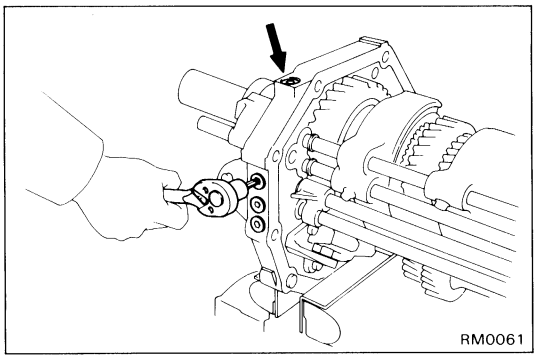

11. REMOVE STRAIGHT SCREW PLUGS, LOCKING BALLS AND SPRINGS

(a) Using a torx socket wrench, remove the four plugs.

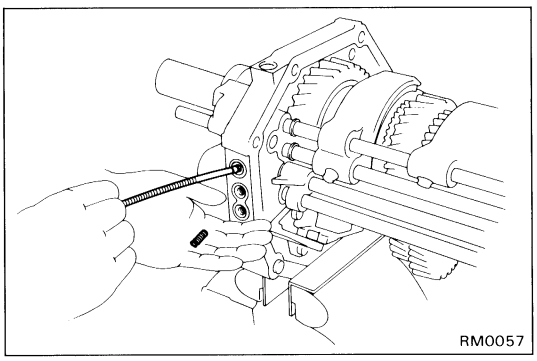

(b) Using a magnetic finger, remove the four springs and balls.

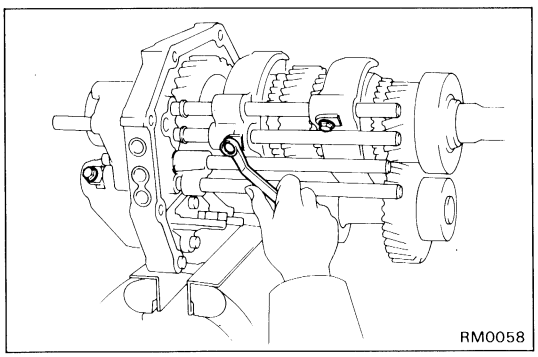

12. REMOVE SHIFT FORK SET BOLTS

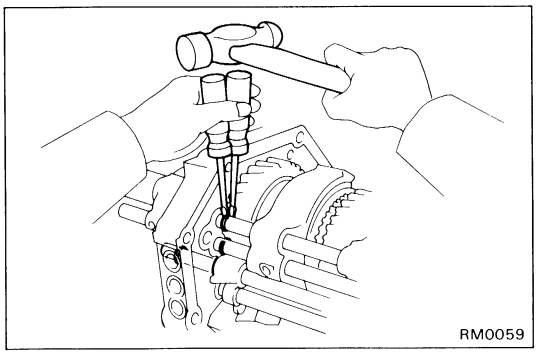

13. REMOVE SNAP RINGS

Using two screwdrivers and a hammer, remove the three snap rings.

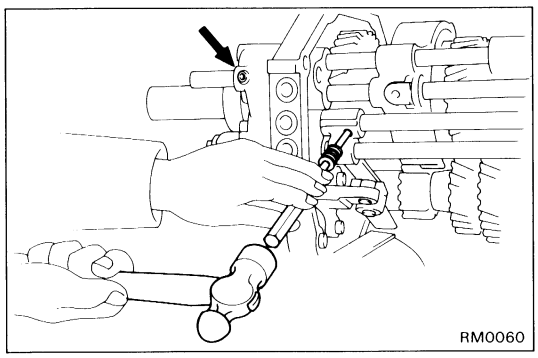

14. REMOVE SLOTTED SPRING PINS

Using a pin punch and hammer, drive out the two pins.

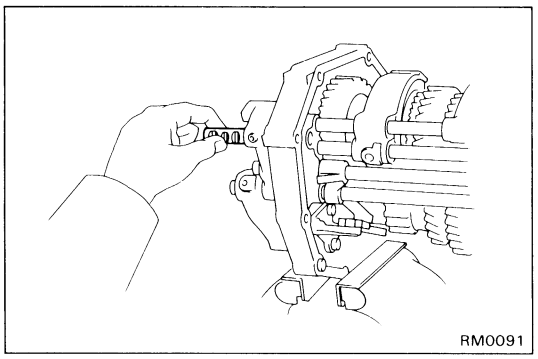

15. REMOVE NO.5 SHIFT FORK SHAFT

Pull out No.5 shift fork shaft from the intermediate plate.

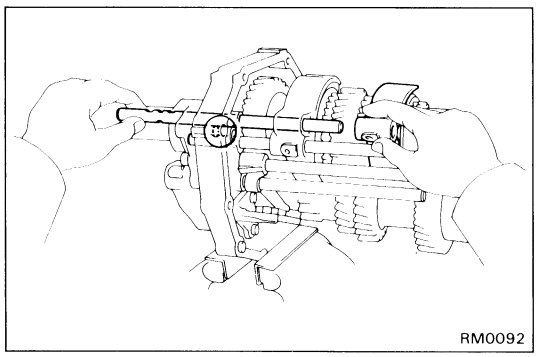

16. REMOVE NO.2 SHIFT FORK SHAFT AND SHIFT FORK

(a) Pull out No.2 shift fork shaft from the intermediate plate.

(b) Remove No.2 shift fork.

(c) Using a magnetic finger, remove the interlock pin from the intermediate plate.

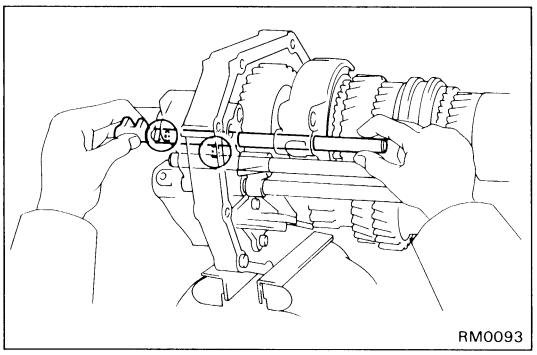

17. REMOVE NO.1 SHIFT FORK SHAFT

(a) Pull out No.1 shift fork shaft from the intermediate plate.

(b) Using a magnetic finger, remove the interlock pins from the shaft hole and intermediate plate.

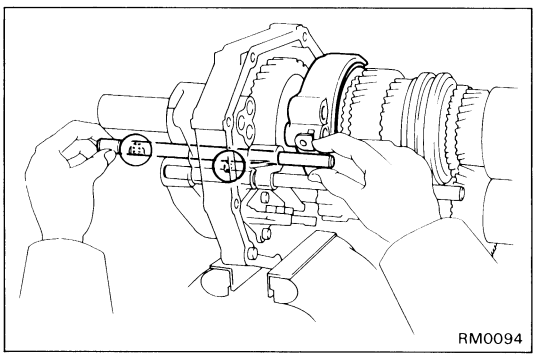

18. REMOVE NO.3 SHIFT FORK SHAFT AND NO.1 SHIFT FORK

(a) Pull out No.3 shift fork shaft from the intermediate plate.

(b) Remove No.1 shift fork.

(c) Using a magnetic finger, remove the interlock pin and locking ball from the shaft hole and intermediate plate.

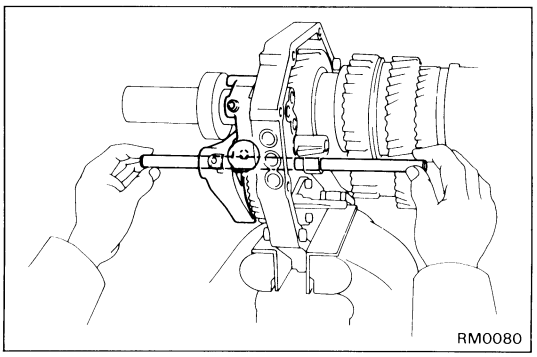

19. REMOVE NO.4 SHIFT FORK SHAFT, NO.3 SHIFT FORK AND REVERSE SHIFT HEAD

(a) Pull out No.4 shift fork shaft from the intermediate plate.

(b) Remove the reverse shift head and locking ball.

(c) Remove No.3 shift fork.

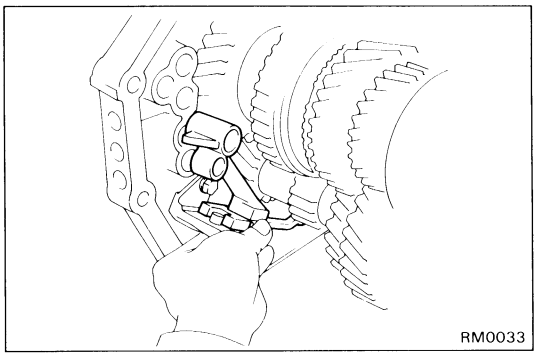

20. REMOVE REVERSE SHIFT ARM FROM REVERSE SHIFT ARM BRACKET

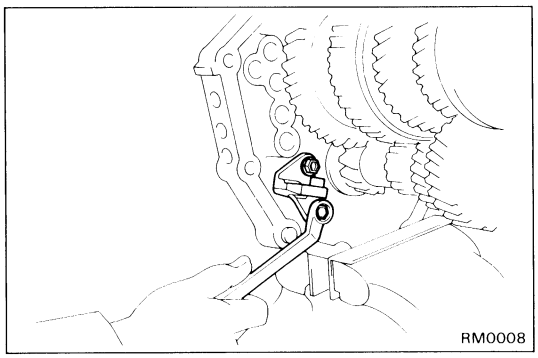

21. REMOVE REVERSE SHIFT ARM BRACKET

Remove the two bolts and the reverse shift arm bracket.

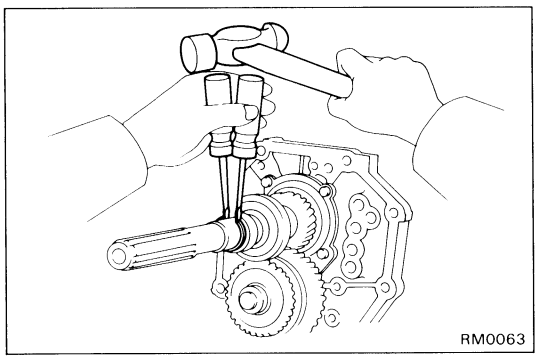

22. REMOVE SPEEDOMETER DRIVE GEAR

(a) Using two screwdrivers and a hammer, tap out the rear snap ring.

(b) Remove the speedometer drive gear and ball.

(c) Using two screwdrivers and a hammer, tap out the front snap ring.

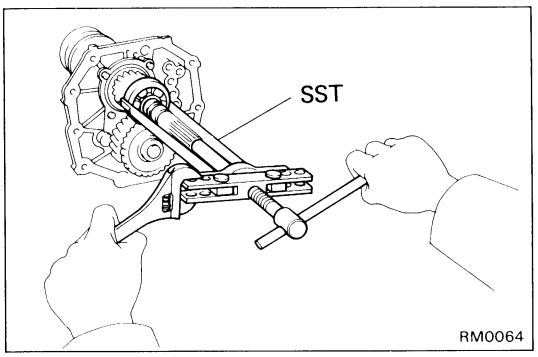

23. REMOVE OUTPUT SHAFT REAR BEARING

(a) Using two screwdrivers and a hammer, tap out the snap ring.

(b) Using SST, remove the rear bearing.

SST 09950-20017

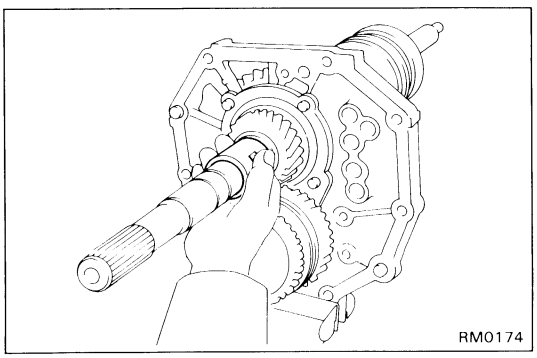

24. REMOVE SPACER

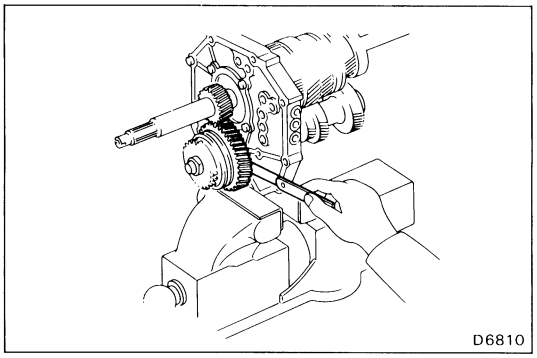

25. MEASURE COUNTER FIFTH GEAR THRUST CLEARANCE

Using a feeler gauge, measure the counter 5th gear thrust clearance.

Standard clearance: 0.10 — 0.35 mm (0.0039 — 0.0138 in.)
Maximum clearance: 0.40 mm (0.0157 in.)

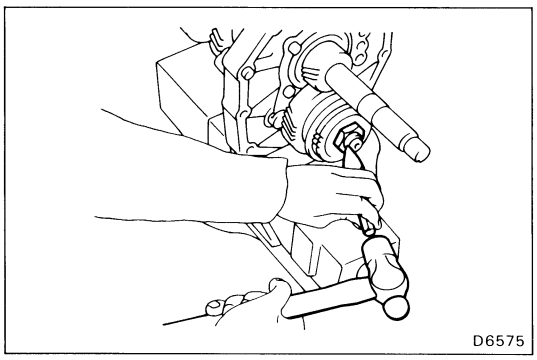

26. REMOVE NO.5 GEAR SPLINE PIECE, SYNCHRONIZER RING, NEEDLE ROLLER BEARING AND COUNTER FIFTH GEAR WITH NO.3 HUB SLEEVE

(a) Engage the gear double meshing.

(b) Using a hammer and chisel, loosen the staked part of the nut.

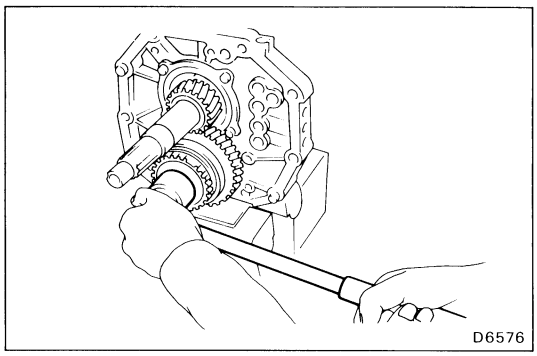

(c) Remove the lock nut.

(d) Disengage the gear double meshing.

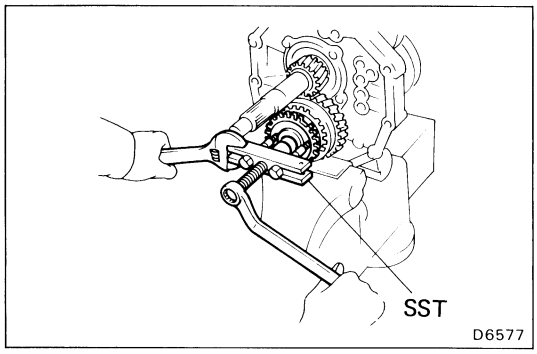

(e) Using SST, remove No.5 gear spline piece.

SST 09213-31021

(f) Remove the counter 5th gear with No.3 hub sleeve.

27. REMOVE SHIFTING KEYS AND SPRINGS FROM 5TH GEAR AND NO.3 HUB SLEEVE

Using a screwdriver, remove the three shifting keys and two springs.

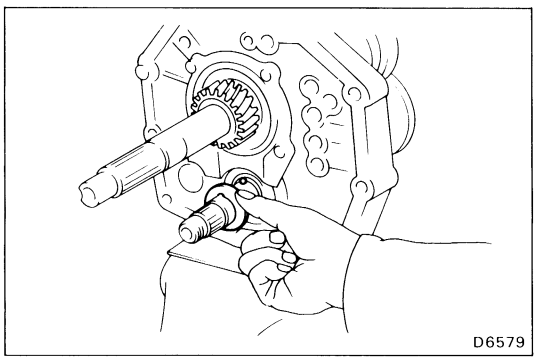

28. REMOVE THRUST WASHER AND BALL

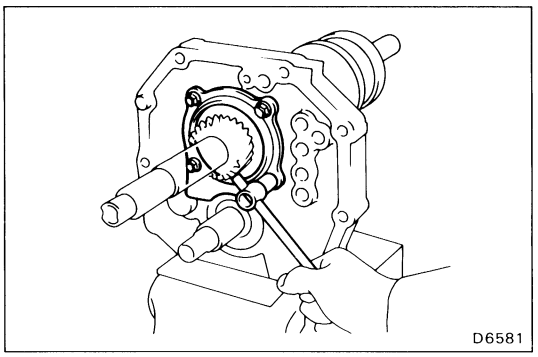

29. REMOVE REAR BEARING RETAINER

Remove the four bolts and rear bearing retainer.

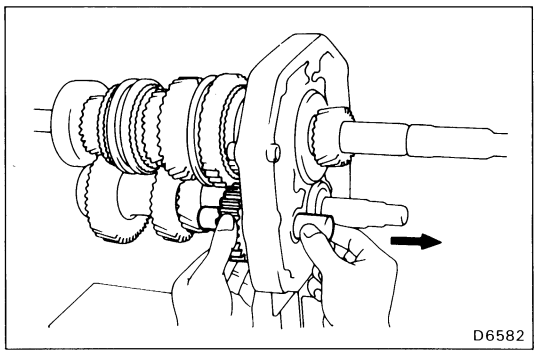

30. REMOVE REVERSE IDLER GEAR AND SHAFT

Pull out the shaft toward the rear.

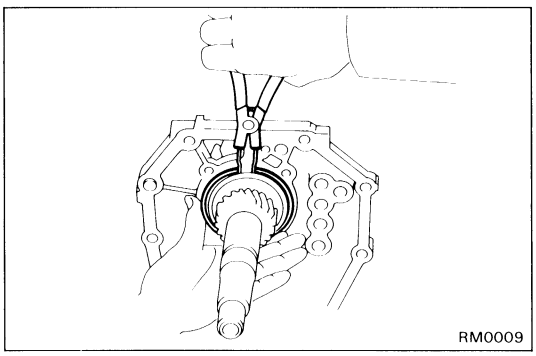

31. REMOVE BEARING SNAP RING

Using snap ring pliers, remove the snap ring.

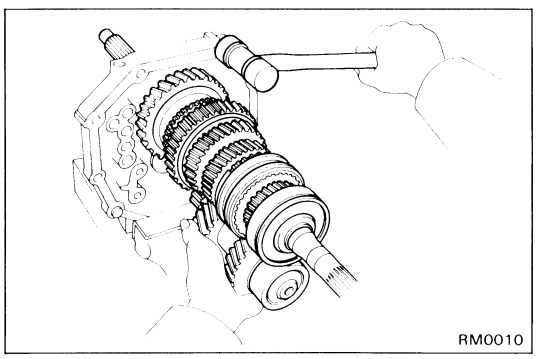

32. REMOVE OUTPUT SHAFT, COUNTER GEAR AND INPUT SHAFT AS A UNIT FROM INTERMEDIATE PLATE

(a) Remove the output shaft, counter gear and input shaft as a unit from the intermediate plate by pulling on the counter gear and tapping on the intermediate plate with a plastic hammer.

(b) Remove the input shaft with the needle roller bearing from the output shaft.

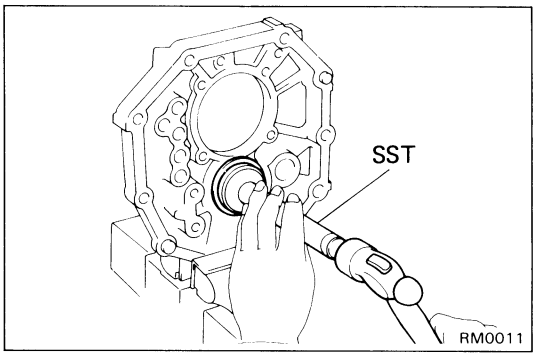

33. REMOVE COUNTER REAR BEARING FROM INTERMEDIATE PLATE

Using SST, remove the counter rear bearing.

SST 09608-12010 (09608-00020, 09608-00050)

COMPONENT PARTS

Input Shaft Assembly

COMPONENTS

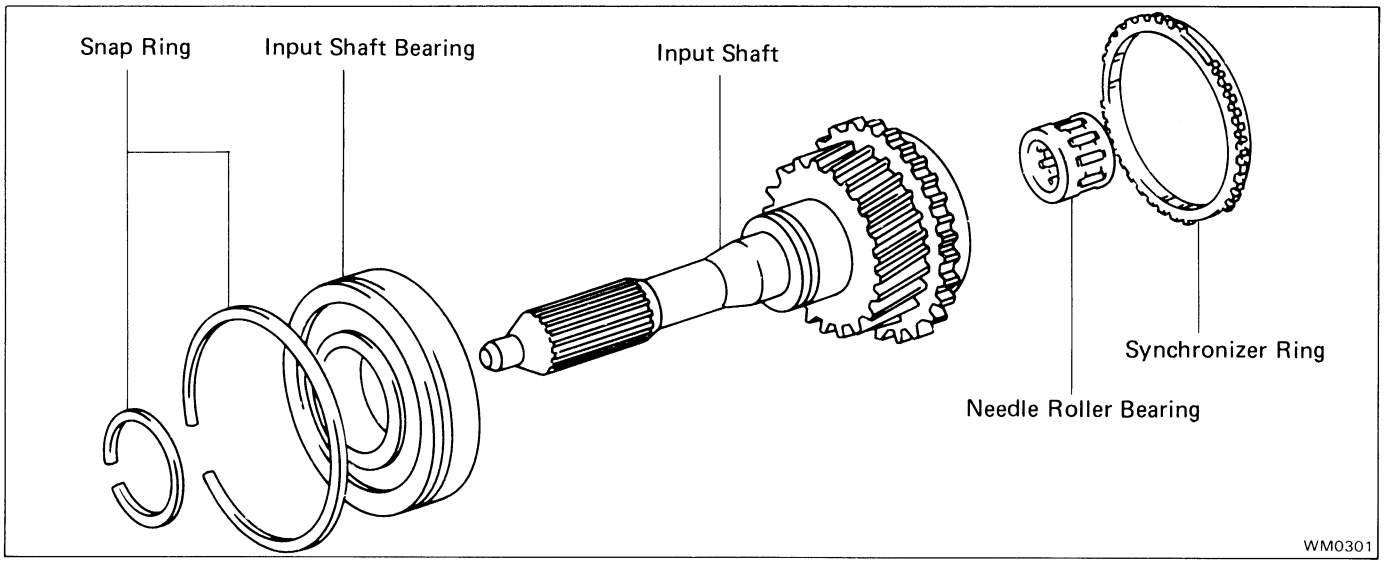

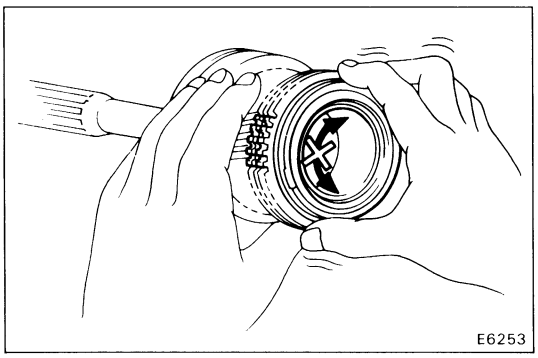

INSPECTION OF INPUT SHAFT

INSPECT SYNCHRONIZER RING

(a) Turn the ring and push it in to check the braking action.

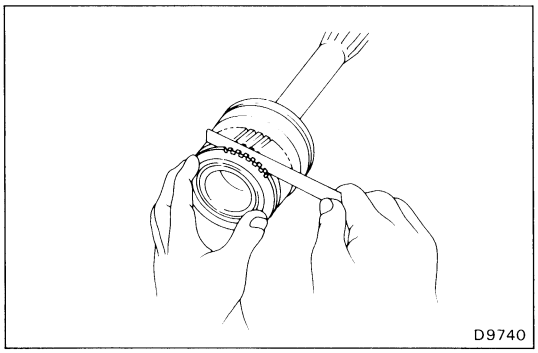

(b) Measure the clearance between the synchronizer ring back and the gear spline end.

Standard clearance: **0.8 — 1.6 mm (0.031 — 0.063 in.)**

Minimum clearance: **0.6 mm (0.024 in.)**

If the clearance is less than the limit, replace the synchronizer ring.

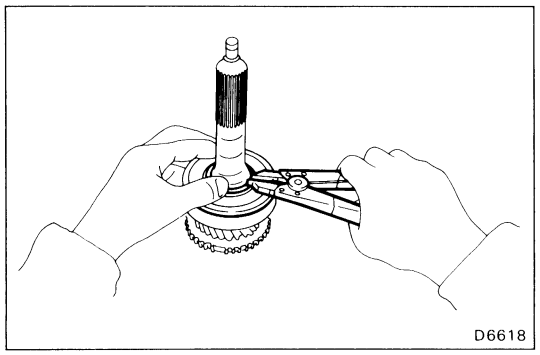

REPLACEMENT OF BEARING

IF NECESSARY, REPLACE INPUT SHAFT BEARING

(a) Using snap ring pliers, remove the snap ring.

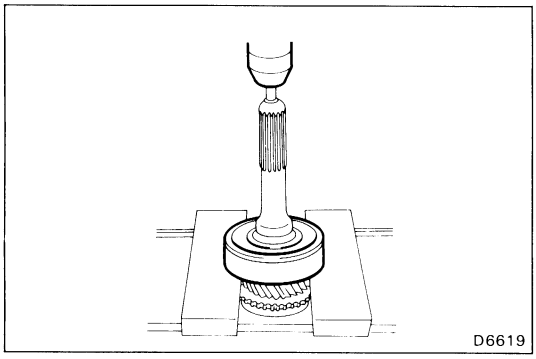

(b) Using a press, remove the bearing.

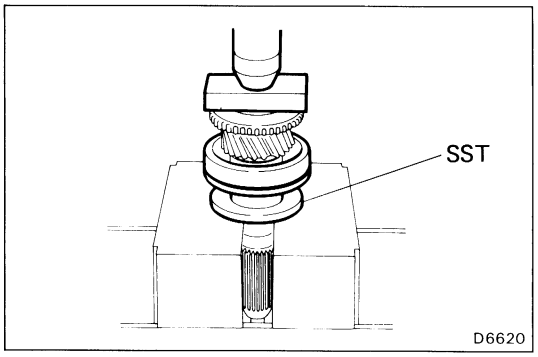

(c) Using a press and SST, install a new bearing.

SST 09506-35010

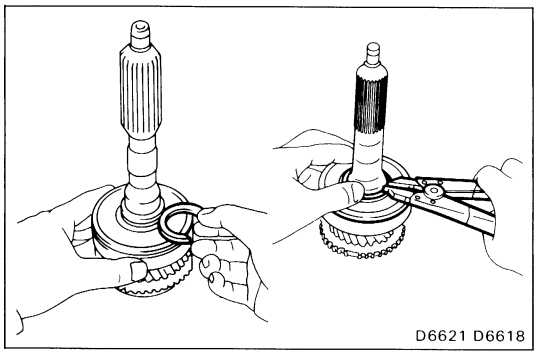

(d) Select a snap ring that will allow minimum axial play and install it on the shaft.

Mark	Thickness mm (in.)
A	2.10 – 2.15 (0.0827 – 0.0846)
B	2.15 – 2.20 (0.0846 – 0.0866)
C	2.20 – 2.25 (0.0866 – 0.0886)
D	2.25 – 2.30 (0.0886 – 0.0906)
E	2.30 – 2.35 (0.0906 – 0.0925)
F	2.35 – 2.40 (0.0925 – 0.0945)
G	2.40 – 2.45 (0.0945 – 0.0965)

Output Shaft Assembly

COMPONENTS

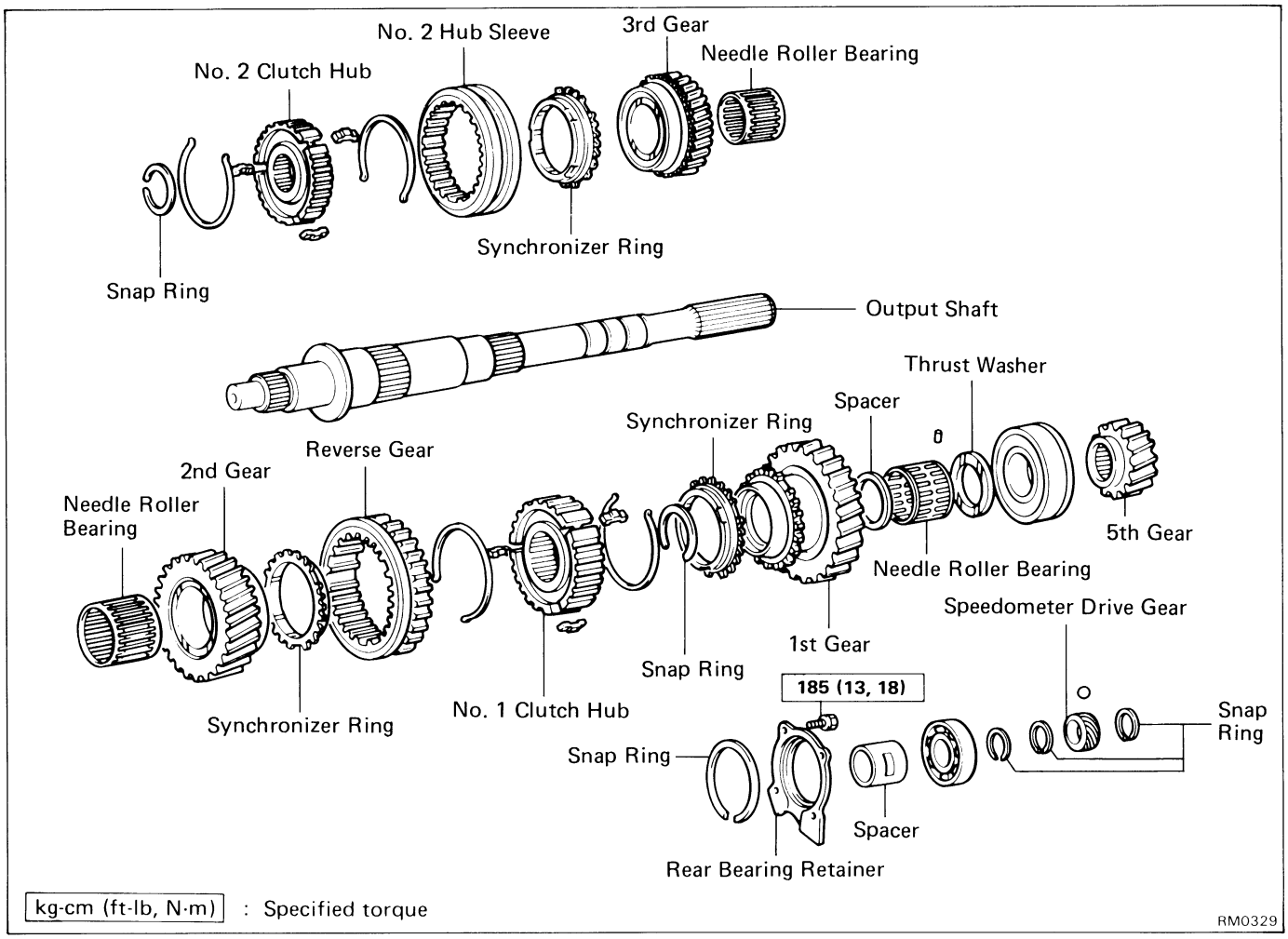

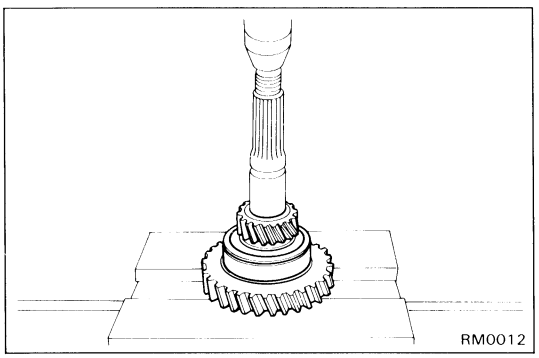

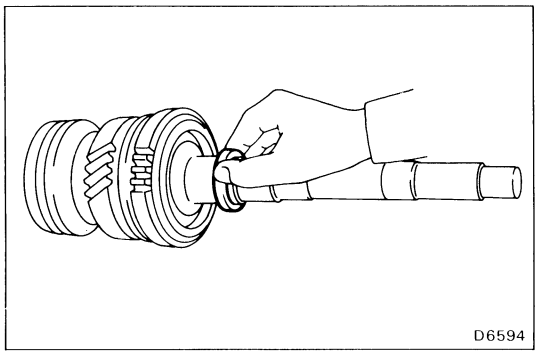

DISASSEMBLY OF OUTPUT SHAFT ASSEMBLY

1. REMOVE FIFTH GEAR, CENTER BEARING AND FIRST GEAR ASSEMBLY

(a) Using a press, remove the 5th gear, center bearing, thrust washer and 1st gear.

(b) Remove the synchronizer ring.

(c) Remove the straight pin and needle roller bearing.

(d) Remove the spacer.

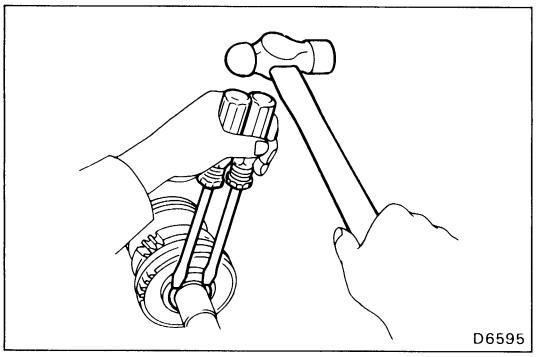

2. REMOVE NO.1 HUB SLEEVE ASSEMBLY AND SECOND GEAR ASSEMBLY

(a) Using two screwdrivers and a hammer, tap out the snap ring.

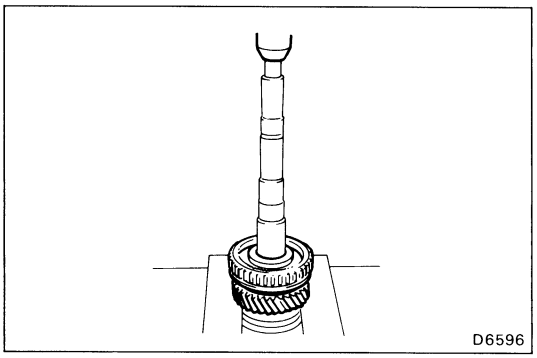

(b) Using a press, remove No.1 hub sleeve, synchronizer ring and 2nd gear.

(c) Remove the needle roller bearing.

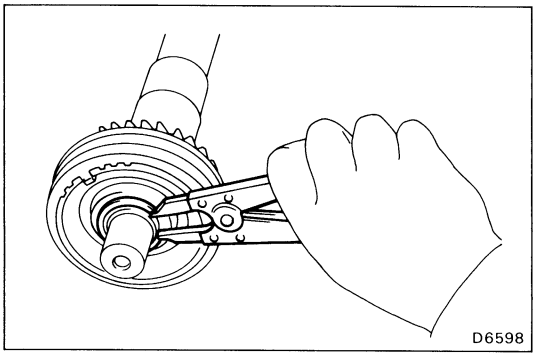

3. REMOVE NO.2 HUB SLEEVE ASSEMBLY AND THIRD GEAR ASSEMBLY

(a) Using snap ring pliers, remove the snap ring.

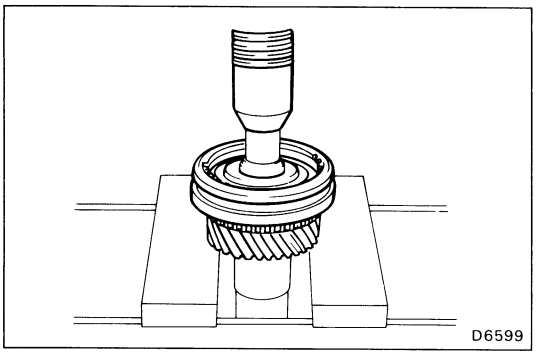

(b) Using a press, remove No.2 hub sleeve, synchronizer ring and 3rd gear.

(c) Remove the needle roller bearing.

4. REMOVE SHIFTING KEYS AND SPRINGS FROM HUB SLEEVE ASSEMBLY

Using screwdriver, remove the three shifting keys and two springs.

HINT: No.1 hub sleeve and No.2 hub sleeve.

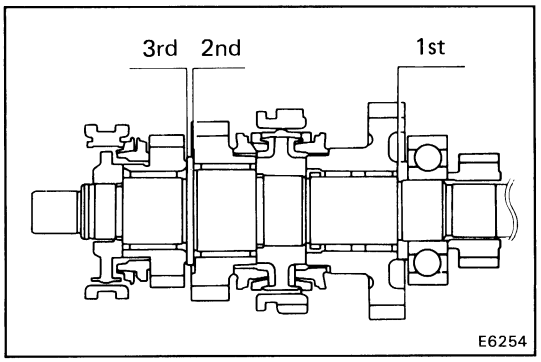

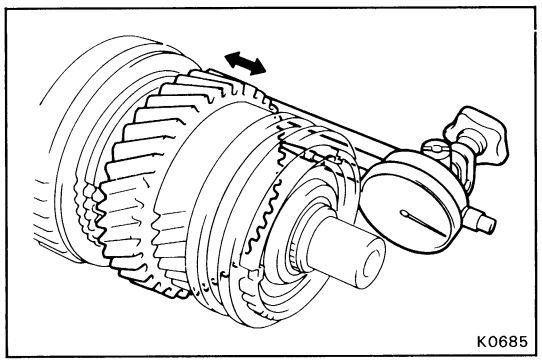

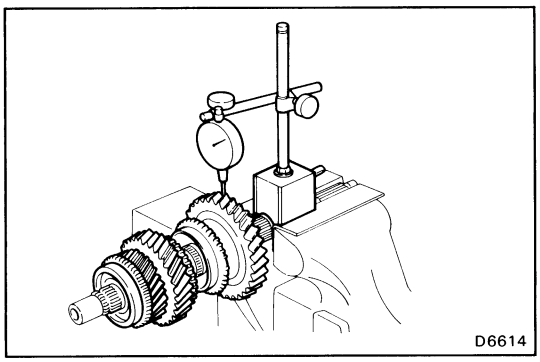

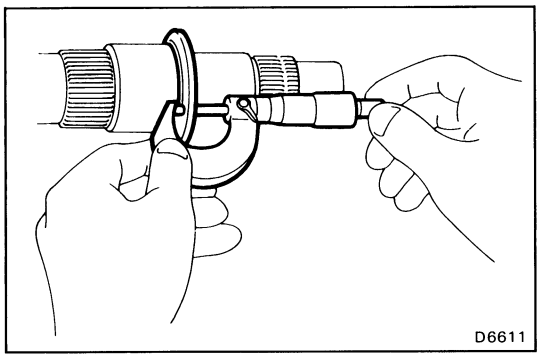

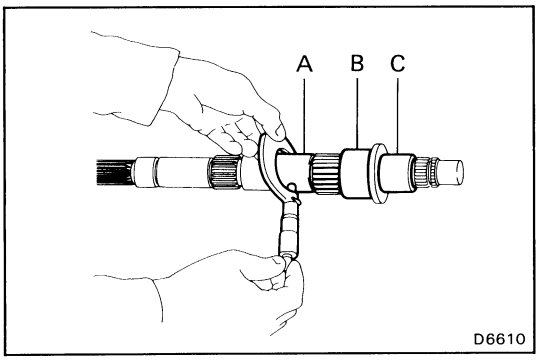

INSPECT OF OUTPUT SHAFT ASSEMBLY

1. MEASURE EACH GEAR THRUST CLEARANCE

(a) Using a feeler garge, measure the thrust clearance of 1st gear and 3rd gear.

(b) Using a dial indicator, measure the thrust clearance of 2nd gear.

1st gear

Standard clearance: 0.10 — 0.45 mm (0.0039 — 0.0177 in.)

Maximum clearance: 0.50 mm (0.0197in.)

2nd and 3rd gear

Standard clearance: 0.10 — 0.25 mm (0.0039 — 0.0098 in.)

Maximum clearance: 0.30 mm (0.0118in.)

2. CHECK OIL CLEARANCE OF EACH GEAR

Using a dial indicator, measure the oil clearance between the gear and shaft with the needle roller bearing installed.

1st gear

Standard clearance: 0.020 — 0.073 mm (0.0008 — 0.0029 in.)

Maximum clearance: 0.16 mm (0.0063 in.)

2nd and 3rd gear

Standard clearance: 0.015 — 0.068 mm (0.0006 — 0.0027 in.)

Maximum clearance: 0.16 mm (0.0063 in.)

If the clearance exceeds the limit, replace the gear, needle roller bearing or shaft.

3. INSPECT OUTPUT SHAFT

(a) Using a micrometer, measure the output shaft flange thickness.

Minimum thickness: 4.70 mm (0.1850 in.)

(b) Using a micrometer, measure the outer diameter of the output shaft journal.

Minimum diameter:

A 1st gear 38.860 mm (1.5299 in.)
B 2nd gear 46.860 mm (1.8449 in.)
C 3rd gear 37.860 mm (1.4905 in.)

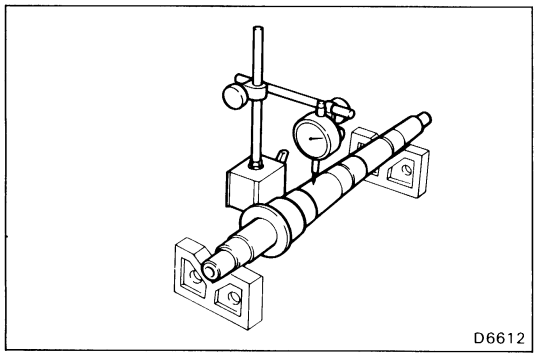

(c) Using a dial indicator, check the shaft runout.

Maximum runout: 0.06 mm (0.0024 in.)

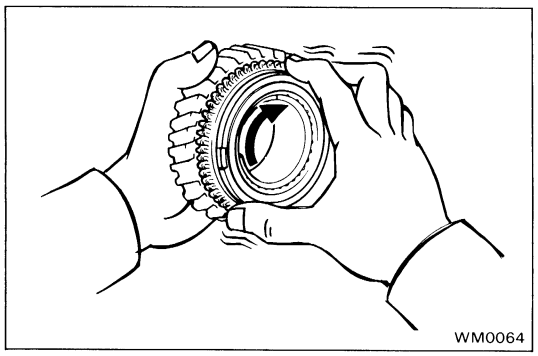

4. INSPECT SYNCHRONIZER RINGS

(a) Turn the ring and push it in to check the braking action.

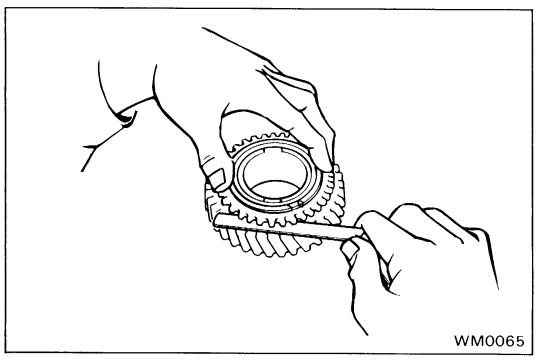

(b) Measure the clearance between the synchronizer ring back and the gear spline end.

Standard clearance: 0.8 — 1.6 mm (0.031 — 0.063 in.)

Minimum clearance: 0.6 mm (0.024 in.)

If the clearance is less than the limit, replace the synchronizer ring.

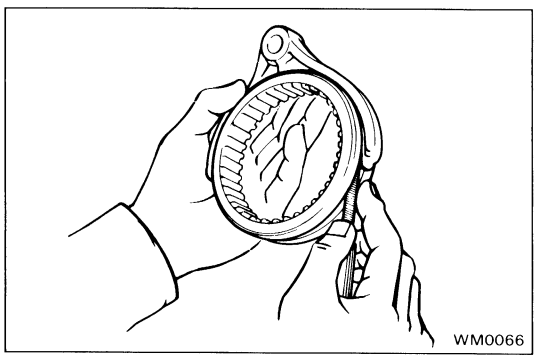

5. MEASURE CLEARANCE OF SHIFT FORKS AND HUB SLEEVES

Using a feeler gauge, measure the clearance between the hub sleeve and shift fork.

Maximum clearance: 1.0 mm (0.039 in.)

If the clearance exceeds the limit, replace the shift fork or hub sleeve.

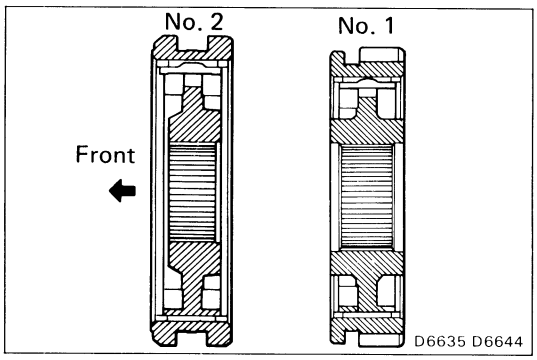

ASSEMBLY OF OUTPUT SHAFT ASSEMBLY

1. INSERT NO.1 AND NO.2 CLUTCH HUB INTO HUB SLEEVE

(a) Install the clutch hub and shifting keys to the hub sleeve.

(b) Install the shifting key springs under the shifting keys.

NOTICE: Install the key springs positioned so that their end gaps are not in line.

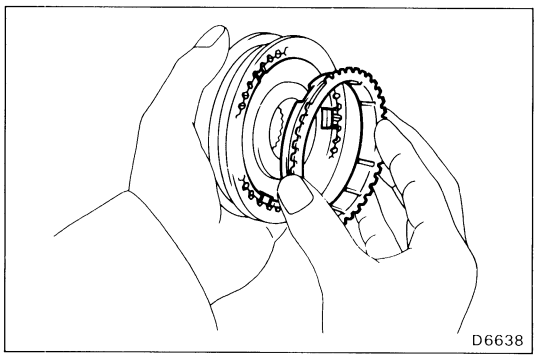

2. INSTALL THIRD GEAR AND NO.2 HUB SLEEVE ON OUTPUT SHAFT

(a) Apply gear oil to the shaft and needle roller bearing.

(b) Place the synchronizer ring on the gear and align the ring slots with the shifting keys.

(c) Install the needle roller bearing in the 3rd gear.

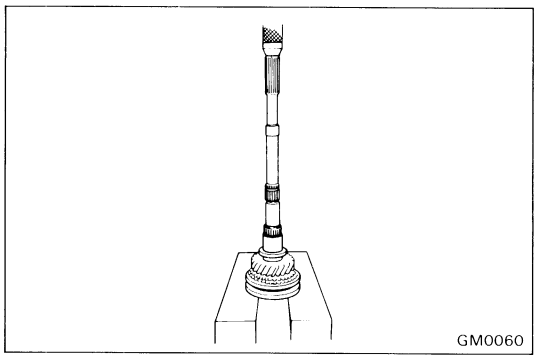

(d) Using a press, install the 3rd gear and No.2 hub sleeve.

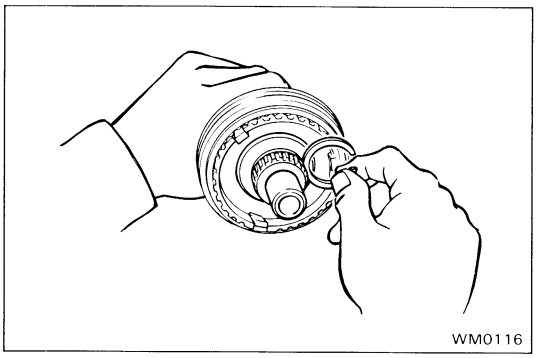

3. INSTALL SNAP RING

(a) Select a snap ring that will allow minimum axial play.

Mark	Thickness mm (in.)
A	1.80 – 1.85 (0.0709 – 0.0728)
B	1.85 – 1.90 (0.0728 – 0.0748)
C	1.90 – 1.95 (0.0748 – 0.0768)
D	1.95 – 2.00 (0.0768 – 0.0787)
E	2.00 – 2.05 (0.0787 – 0.0807)
F	2.05 – 2.10 (0.0807 – 0.0827)
G	2.10 – 2.15 (0.0827 – 0.0846)

(b) Using snap ring pliers, install the snap ring.

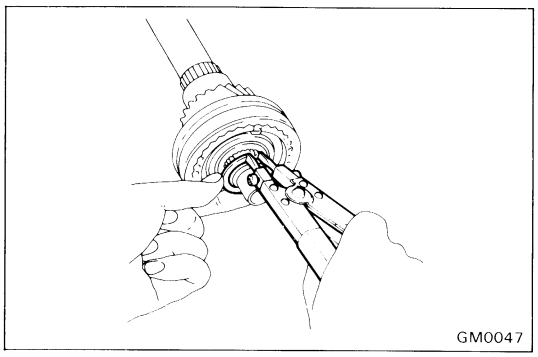

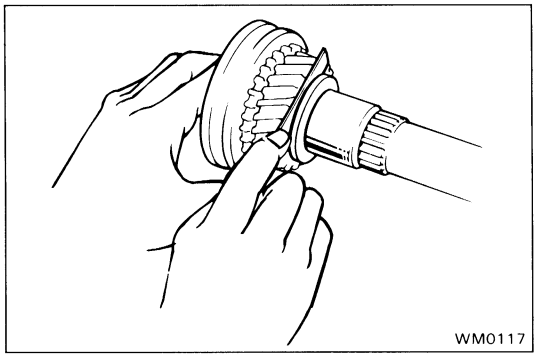

4. MEASURE THIRD GEAR THRUST CLEARANCE

Using a feeler gauge, measure the 3rd gear thrust clearance.

Standard clearance: 0.10 — 0.25 mm (0.0039 — 0.0098 in.)

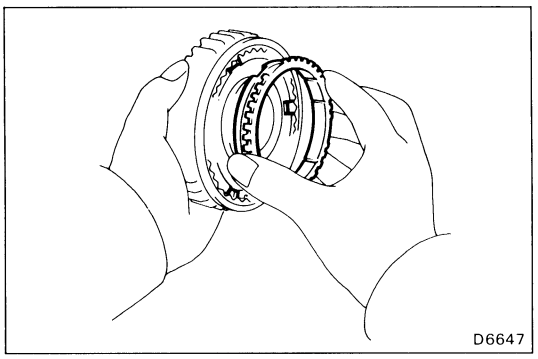

5. INSTALL SECOND GEAR AND NO.1 HUB SLEEVE

(a) Apply gear oil to the shaft and needle roller bearing.

(b) Place the synchronizer ring on the gear and align the ring slots with the shifting keys.

(c) Install the needle roller bearing in the 2nd gear.

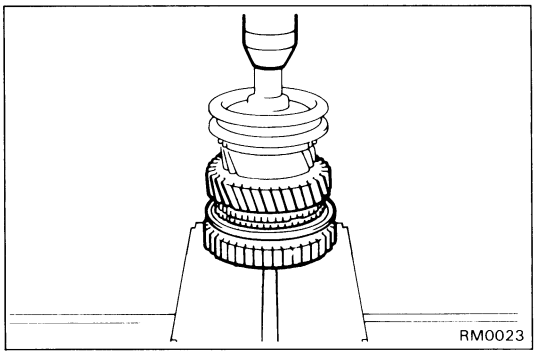

(d) Using a press, install the 2nd gear and No.1 hub sleeve.

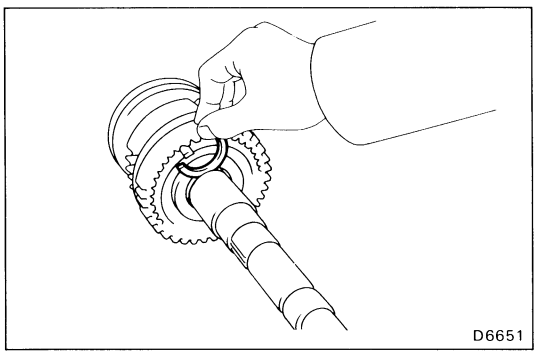

6. INSTALL SNAP RING

(a) Select a snap ring that will allow minimum axial play.

Mark	Thickness mm (in.)
A	2.30 — 2.35 (0.0906 — 0.0925)
B	2.35 — 2.40 (0.0925 — 0.0945)
C	2.40 — 2.45 (0.0945 — 0.0965)
D	2.45 — 2.50 (0.0965 — 0.0984)
E	2.50 — 2.55 (0.0984 — 0.1004)
F	2.55 — 2.60 (0.1004 — 0.1024)
G	2.60 — 2.65 (0.1024 — 0.1043)

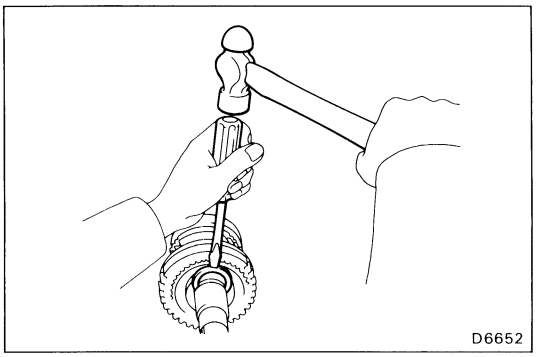

(b) Using a screwdriver and hammer, install the snap ring.

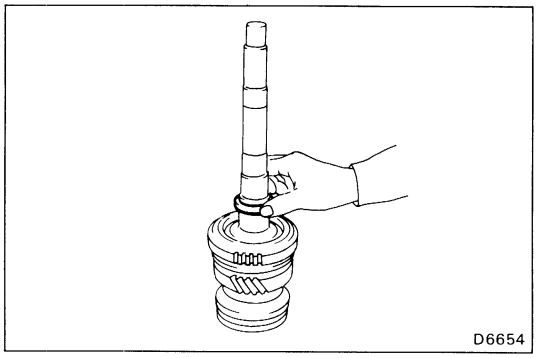

7. INSTALL SPACER AND FIRST GEAR ASSEMBLY

(a) Install the spacer on the output shaft.

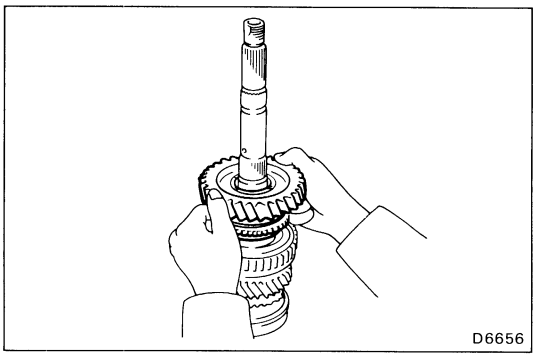

(b) Apply gear oil to the needle roller bearing.

(c) Assemble the 1st gear, synchronizer ring and needle roller bearing.

(d) Install the assembly on the output shaft with the synchronizer ring slots aligned with the shifting keys.

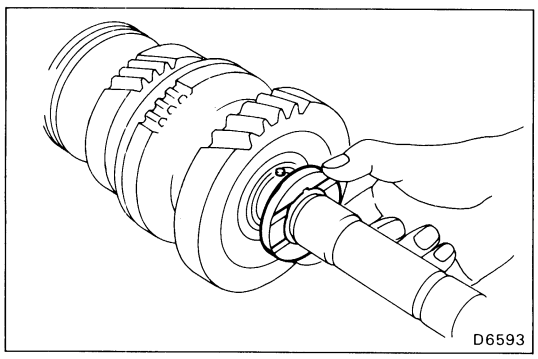

8. INSTALL STRAIGHT PIN AND FIRST GEAR THRUST WASHER

Install the 1st gear thrust washer onto the output shaft with the straight pin aligned with the 1st gear thrust washer.

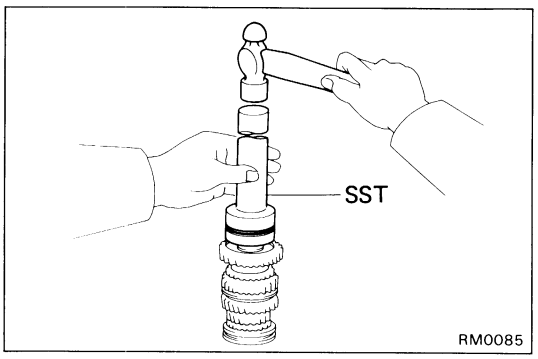

9. INSTALL OUTPUT SHAFT CENTER BEARING

Using SST, drive in the bearing with the outer race snap ring groove toward the rear.

SST 09309-35010

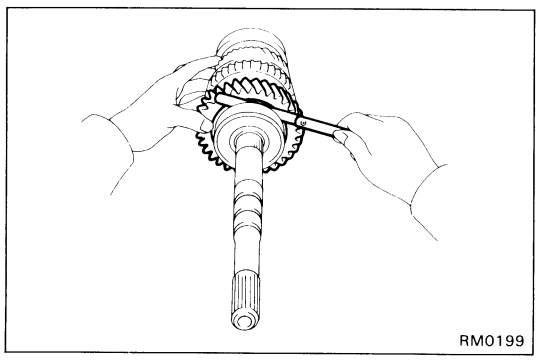

10. MEASURE FIRST GEAR THRUST CLEARANCE

Using a feeler gauge, measure the 1st gear thrust clearance.

Standard clearance: 0.10 — 0.45 mm (0.0039 — 0.0177 in.)

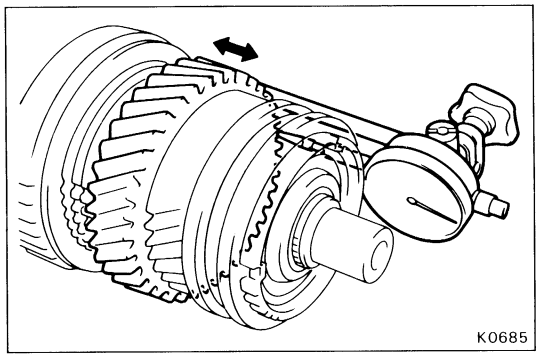

11. MEASURE SECOND GEAR THRUST CLEARANCE

Using a dial indicator, measure the 2nd gear thrust clearance.

Standard clearance: 0.10 — 0.25 mm (0.0039 — 0.0098in.)

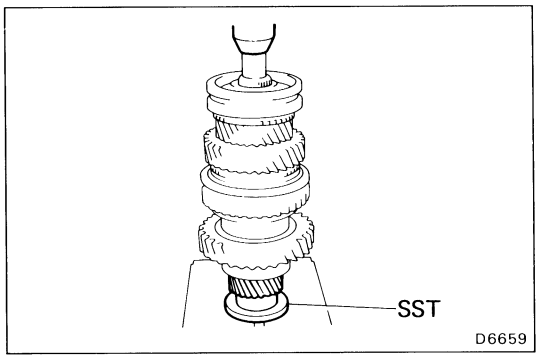

12. INSTALL FIFTH GEAR

Using SST and a press, install the 5th gear.

SST 09316-60010 (09316-00030)

Counter Gear and Reverse Idler Gear

COMPONENTS

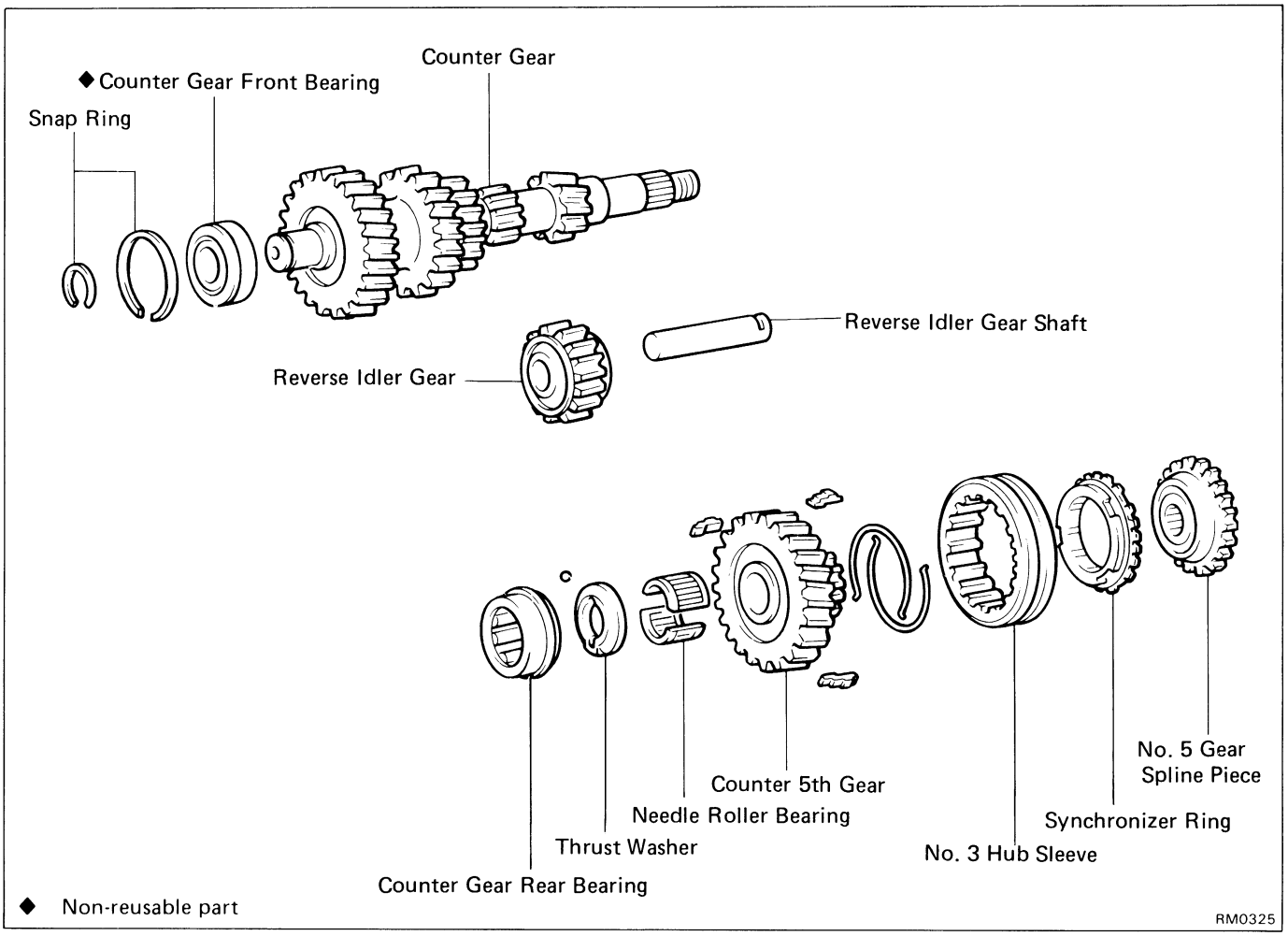

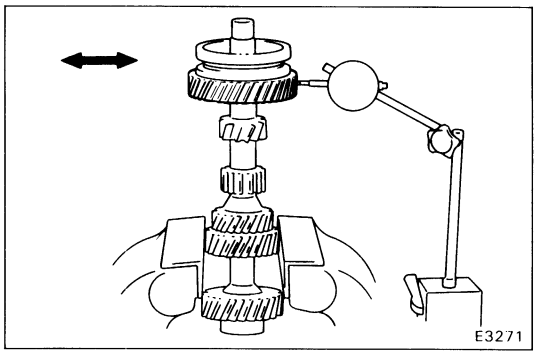

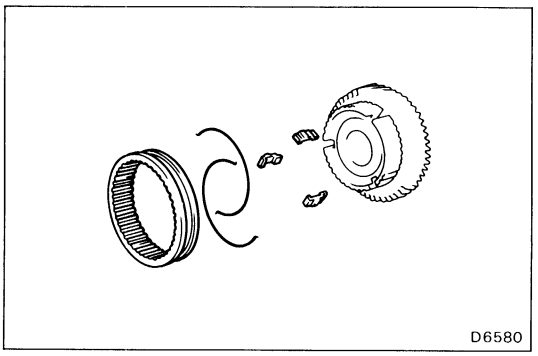

INSPECTION OF COUNTER GEAR

1. CHECK OIL CLEARANCE OF 5TH GEAR

(a) Install the spacer, counter 5th gear and needle roller bearings.

(b) Using a dial indicator, measure the counter 5th gear oil clearance.

Standard clearance: **0.015 — 0.068 mm (0.006 — 0.0027 in.)**
Maximum clearance: **0.16 mm (0.0063 in.)**

If the clearance exceeds the limit, replace the gear, bearing or shaft.

2. REMOVE HUB SLEEVE NO.3 SHIFTING KEYS AND SPRINGS FROM COUNTER 5TH GEAR

Using a screwdriver, remove three shifting keys and two springs from counter 5th gear.

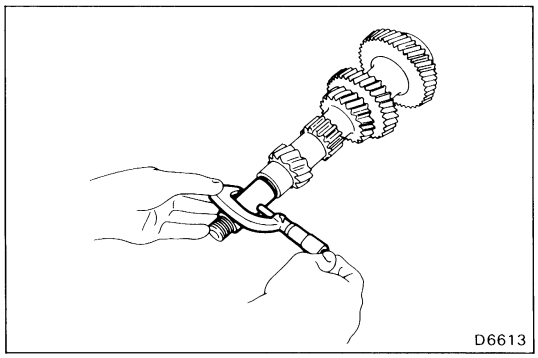

3. **INSPECT COUNTER GEAR**

Using a micrometer, measure the outer diameter of the counter gear journal.

Minimum diameter: 27.860 mm (1.0968 in.)

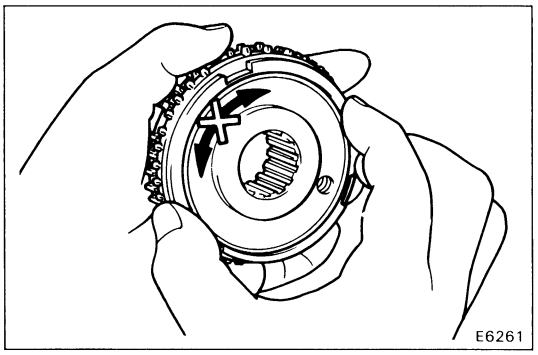

4. **INSPECT SYNCHRONIZER RINGS**

(a) Turn the ring and push it in to check the braking action.

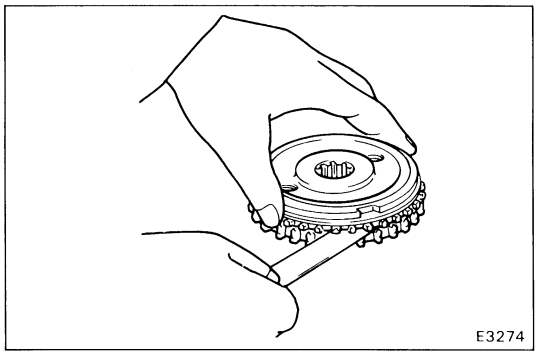

(b) Measure the clearance between the synchronizer ring back and the gear spline end.

Standard clearance: 0.8 — 1.6 mm (0.031 — 0.063 in.)

Minimum clearance: 0.6 mm (0.024 in.)

If the clearance is less than the limit, replace the synchronizer ring.

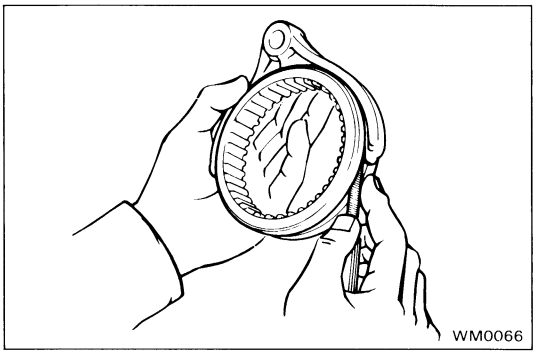

5. **MEASURE CLEARANCE OF SHIFT FORKS AND HUB SLEEVES**

Using a feeler gauge, measure the clearance between the hub sleeve and shift fork.

Maximum clearance: 1.0 mm (0.039 in.)

If the clearance exceeds the limit, replace the shift fork or hub sleeve.

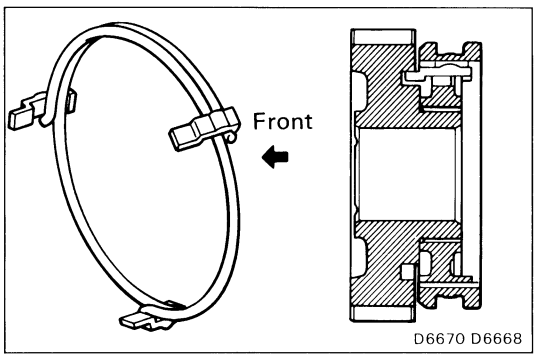

6. **INSTALL HUB SLEEVE NO.3 SHIFTING KEYS AND SPRINGS TO COUNTER 5TH GEAR**

(a) Install the counter 5th gear and shifting keys to the hub sleeve.

(b) Install the shifting key springs under the shifting keys.

NOTICE: Install the key springs positioned so that their end gaps are not in line.

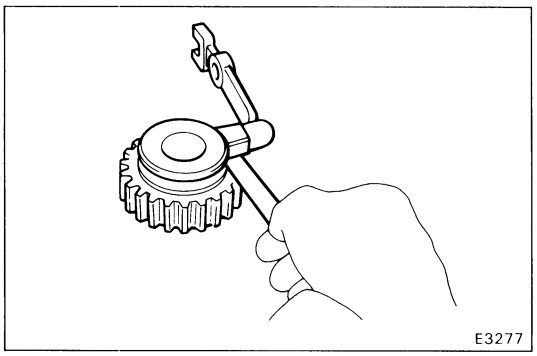

INSPECTION OF REVERSE IDLER GEAR

MEASURE CLEARANCE OF REVERSE IDLER GEAR AND SHIFT ARM SHOE

Using a feeler gauge, measure the clearance between the reverse idler gear and shift arm shoe.

Standard clearance: 0.05 — 0.25 mm (0.0020 — 0.0098 in.)
Maximum clearance: 0.5 mm (0.020 in.)

If the clearance exceeds the limit, replace the shift arm shoe or reverse idler gear.

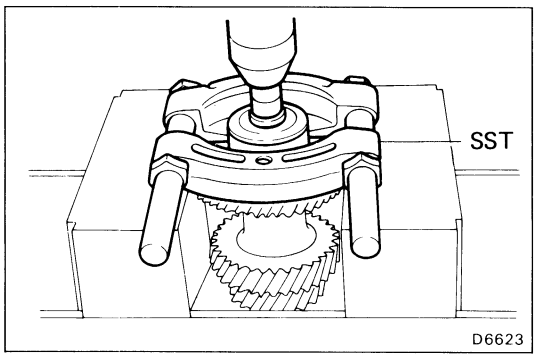

REPLACEMENT OF BEARING

IF NECESSARY, REPLACE COUNTER GEAR FRONT BEARING

(a) Using snap ring pliers, remove the snap ring.

(b) Using SST, press out the bearing.

SST 09950-00020

(c) Replace the side race.

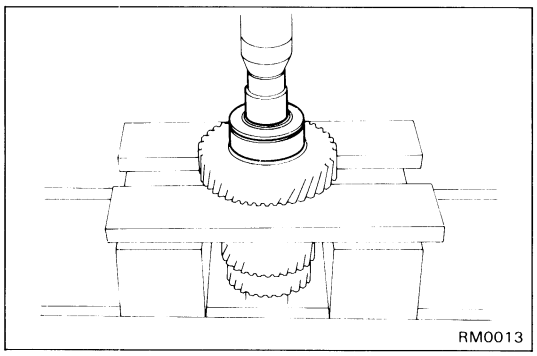

(d) Using a 24-mm socket wrench, press in the bearing and inner race.

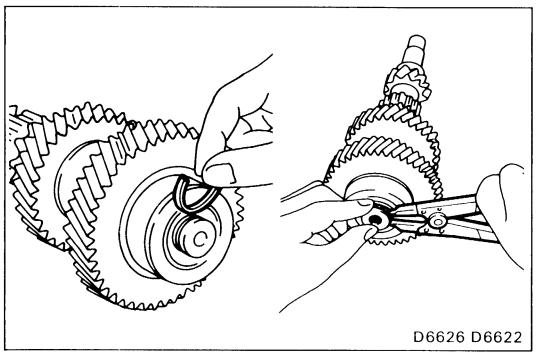

(e) Select a snap ring that will allow minimum axial play and install it on the shaft.

Mark	Thickness mm (in.)
A	2.00 — 2.05 (0.0787 — 0.0807)
B	2.05 — 2.10 (0.0807 — 0.0827)
C	2.10 — 2.15 (0.0827 — 0.0846)
D	2.15 — 2.20 (0.0846 — 0.0866)
E	2.20 — 2.25 (0.0866 — 0.0886)

Front Bearing Retainer

COMPONENTS

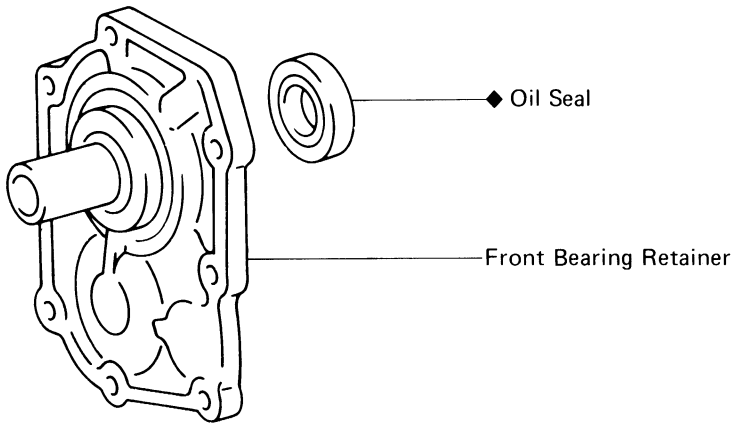

◆ Non-reusable part

RM0322

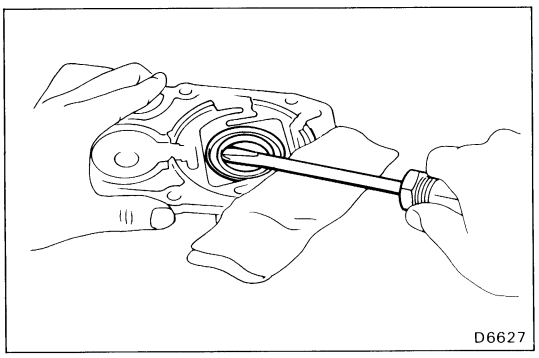

D6627

REPLACEMENT OF OIL SEAL

IF NECESSARY, REPLACE FRONT BEARING RETAINER OIL SEAL

(a) Using a screwdriver, pry out the oil seal.

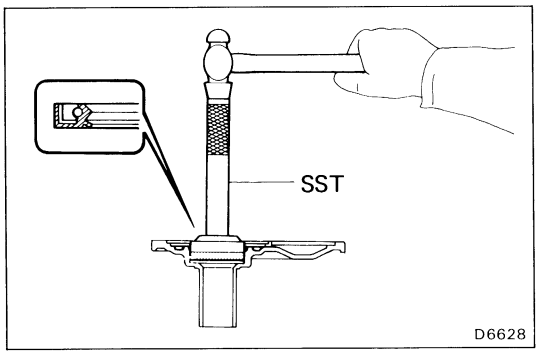

D6628

(b) Using SST, drive in a new oil seal.

SST 09608-35014 (09608-06020, 09608-06090)

Drive in depth: 11.2 — 12.2 mm (0.441 — 0.480 in.)
Transmission case installation surface

Extension Housing

COMPONENTS

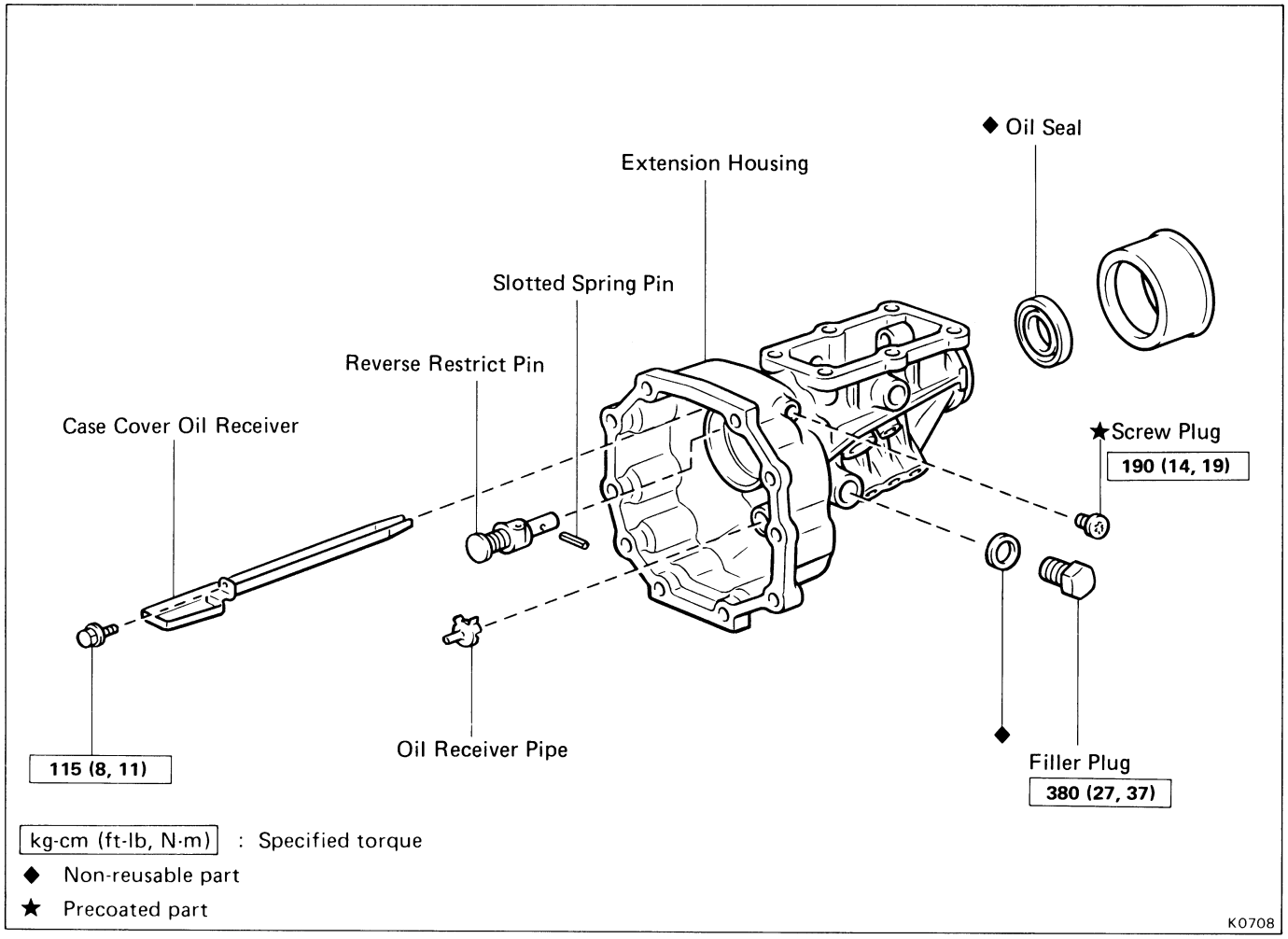

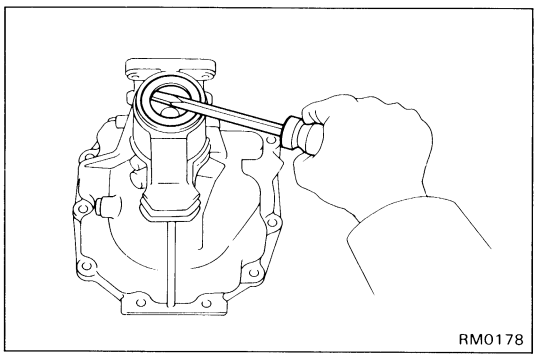

REPLACEMENT OF OIL SEAL

1. **IF NECESSARY, REPLACE EXTENSION HOUSING OIL SEAL**
   (a) Remove the dust deflector.
   (b) Using a screwdriver, pry out the oil seal.

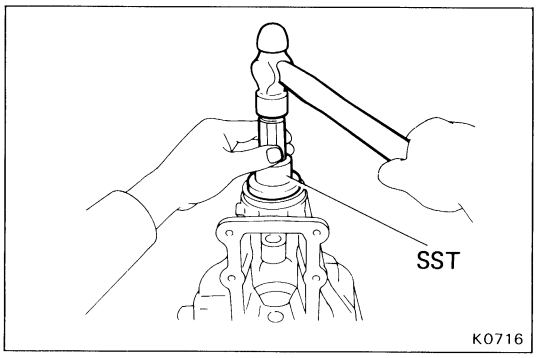

   (c) Using SST, drive in a new oil seal.
   SST 09325-40010
   (d) Install the dust deflector.

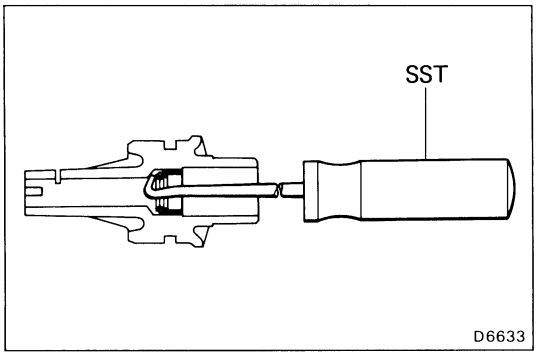

2. IF NECESSARY, REPLACE SPEEDOMETER DRIVEN GEAR OIL SEAL

(a) Using SST, pull out the oil seal.

SST 09921-00010

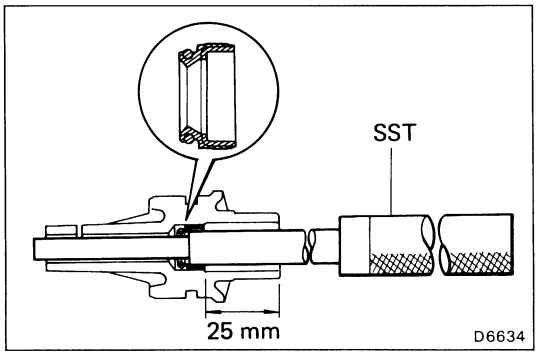

(b) Using SST, drive in a new oil seal into the sleeve.

SST 09201-60011

Drive in depth: 25 mm (0.98 in.)

INSPECTION AND REPLACEMENT OF REVERSE RESTRICT PIN

1. REMOVE REVERSE RESTRICT PIN

(a) Using a torx socket wrench, remove the screw plug.

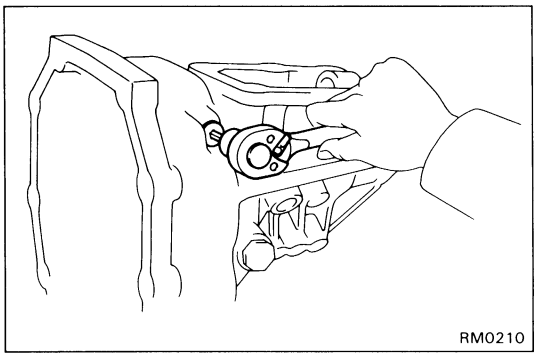

(b) Using a pin punch and hammer, drive out the slotted spring pin.

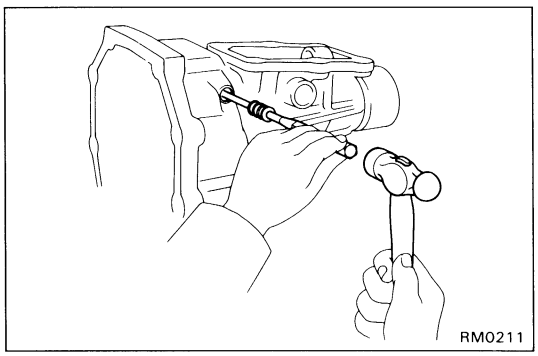

(c) Remove the reverse restrict pin.

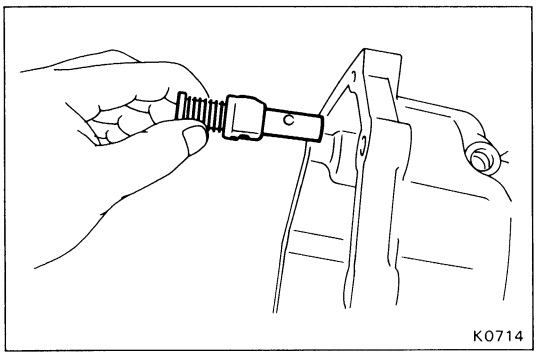

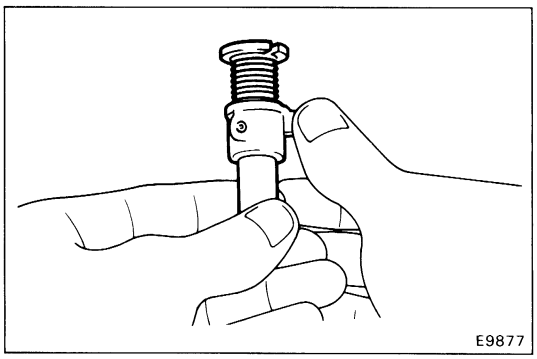

2. INSPECTION OF REVERSE RESTRICT PIN

Turn and push the reverse restrict pin by hand while applying direction.

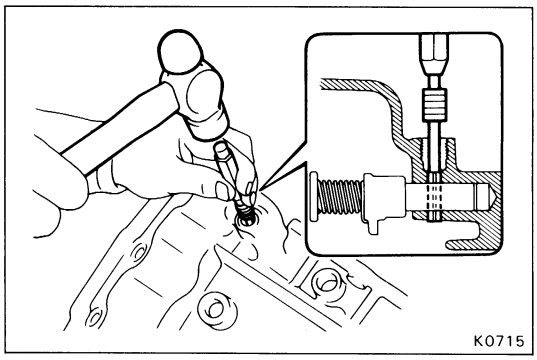

3. INSTALL REVERSE RESTRICT PIN

(a) Install the reverse restrict pin to the extension housing or transfer adaptor.

(b) Using pin punch and hammer, drive in the slotted spring pin.

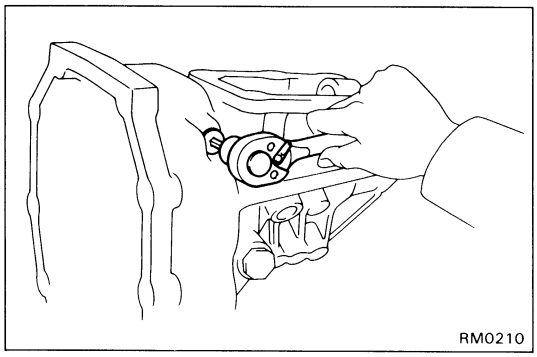

(c) Apply liquid sealer to the plug threads.

Sealant: Part No.08833-00080, THREE BOND 1344, LOCTITE 242 or equivalent

(d) Using a torx socket wrench, install and torque the screw plug.

Torque: 190 kg-cm (14 ft-lb, 19 N·m)

ASSEMBLY OF TRANSMISSION

(See pages MT-49, 50)

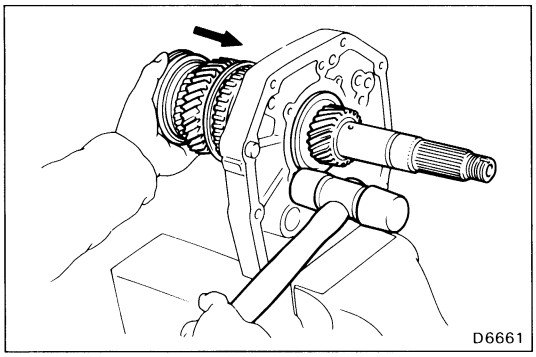

1. INSTALL OUTPUT SHAFT TO INTERMEDIATE PLATE

(a) Install the output shaft into the intermediate plate by pushing on the output shaft and tapping on the intermediate plate.

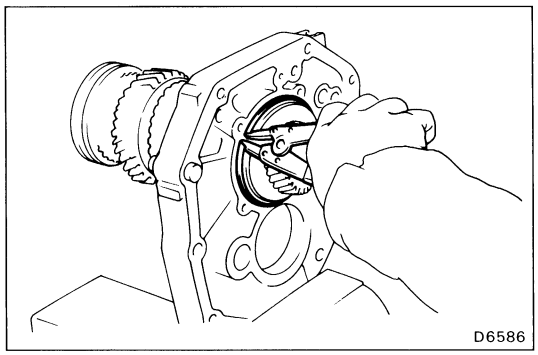

(b) Using snap ring pliers, install the snap ring.

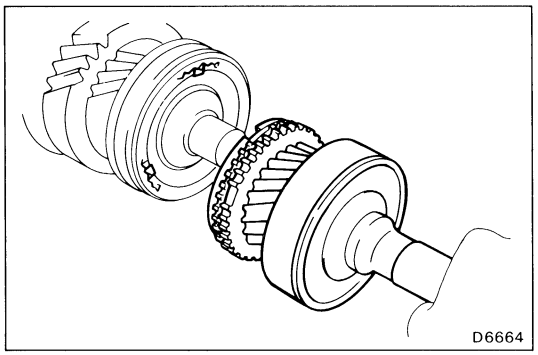

2. INSTALL INPUT SHAFT

(a) Apply gear oil to the needle roller bearing and install it into the input shaft.

(b) Install the input shaft to the output shaft with the synchronizer ring slots aligned with the shifting keys.

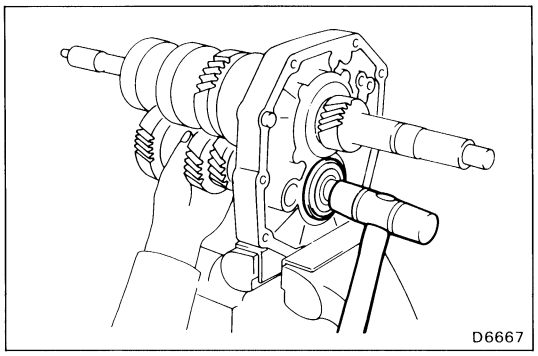

3. INSTALL COUNTER GEAR

Install the counter gear into the intermediate plate while holding the counter gear, and install the counter rear bearing with a plastic hammer.

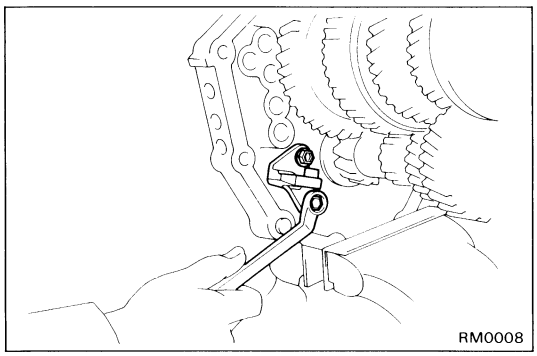

4. INSTALL REVERSE SHIFT ARM BRACKET

Install the reverse shift arm bracket and torque the bolts.

Torque: 185 kg-cm (13 ft-lb, 18 N·m)

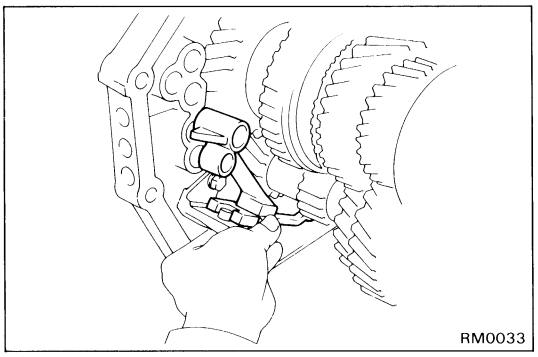

5. INSTALL REVERSE SHIFT ARM TO REVERSE SHIFT ARM BRACKET

Install the reverse shift arm to the pivot of the reverse shift arm bracket.

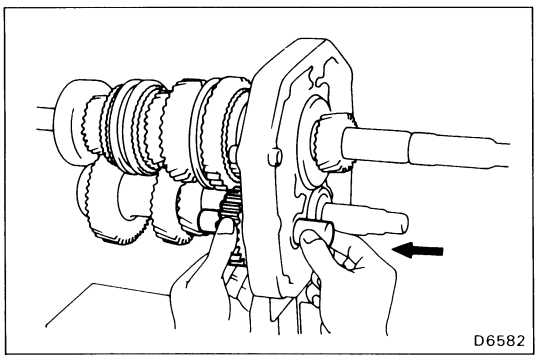

6. INSTALL REVERSE IDLER GEAR AND SHAFT

Align the reverse shift arm shoe to the reverse idler gear groove and insert the reverse idler gear shaft to the intermediate plate.

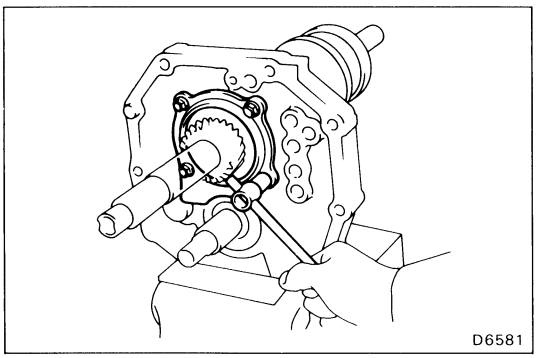

7. INSTALL REAR BEARING RETAINER

(a) Align the rear bearing retainer to the reverse idler gear shaft groove.

(b) Install and torque the bolts.

Torque: 185 kg-cm (13 ft-lb, 18 N·m)

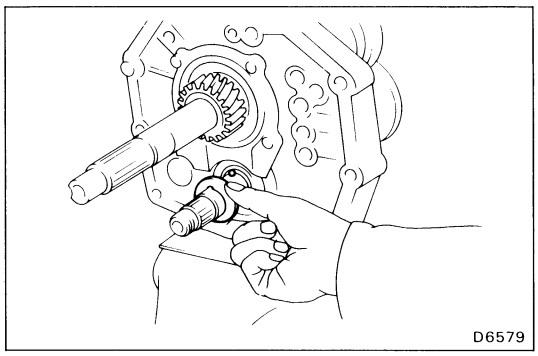

8. INSTALL BALL AND THRUST WASHER

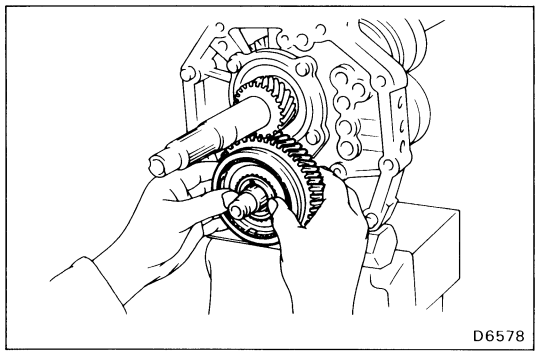

9. INSTALL COUNTER FIFTH GEAR WITH NO.3 HUB SLEEVE ASSEMBLY AND NEEDLE ROLLER BEARINGS

(a) Apply gear oil to the needle roller bearings.

(b) Install the counter 5th gear with No.3 hub sleeve and needle roller bearings.

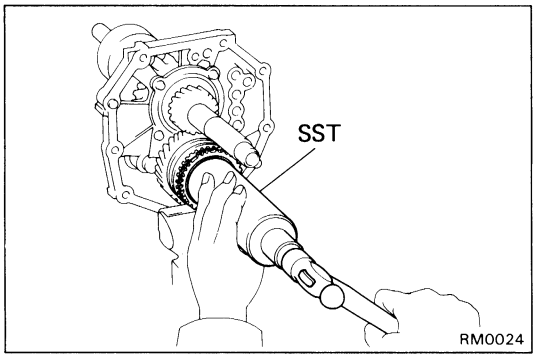

10. INSTALL SYNCHRONIZER RING AND NO.5 GEAR SPLINE PIECE

(a) Install the synchronizer ring on No.5 gear spline piece.

(b) Using SST, drive in No.5 gear spline piece with the synchronizer ring slots aligned with the shifting keys.

SST 09316-60010 (09316-00010)

HINT: When installing No.5 gear spline piece, support the counter gear in front with a 3-5 lb hammer or equivalent.

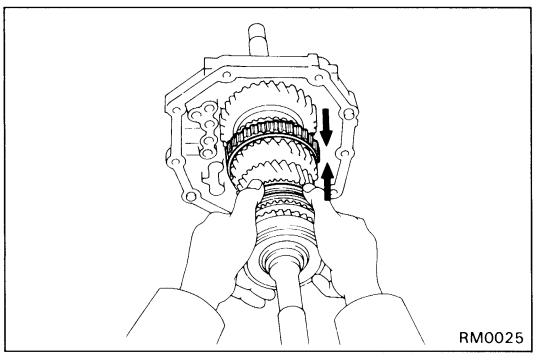

11. INSTALL LOCK NUT

(a) Engage the gear double meshing.

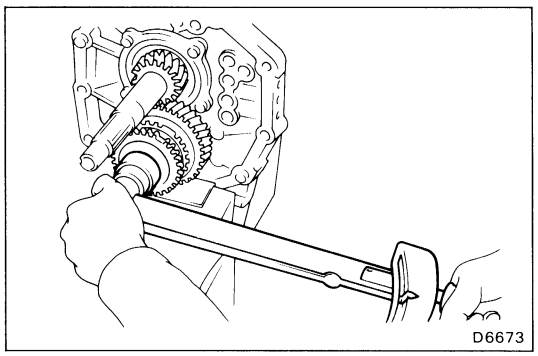

(b) Install and torque the lock nut.

Torque: 1,300 kg-cm (94 ft-lb, 127 N·m)

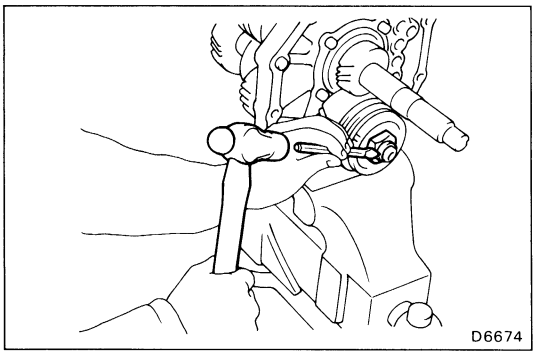

(c) Stake the lock nut.

(d) Disengage the gear double meshing.

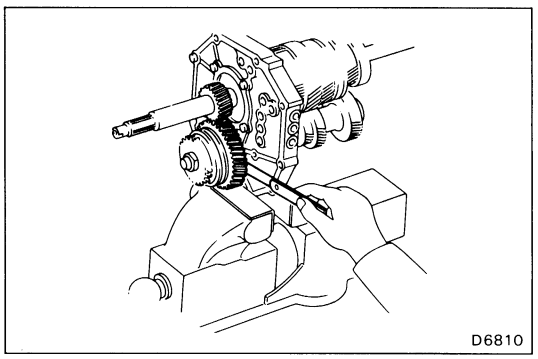

12. MEASURE COUNTER FIFTH GEAR THRUST CLEARANCE

Using a feeler gauge, measure the counter 5th gear thrust clearance.

Standard clearance: 0.10 — 0.35 mm (0.0039 — 0.0138 in.)

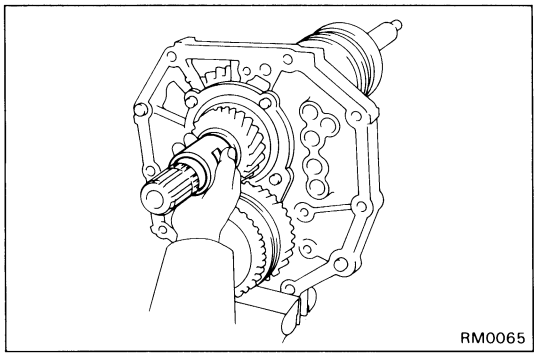

13. INSTALL SPACER

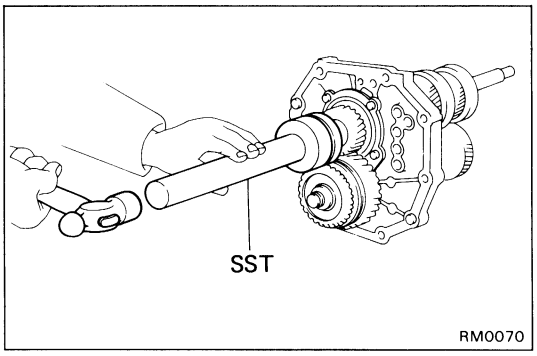

14. INSTALL OUTPUT SHAFT REAR BEARING

Using SST, drive in the rear bearing.

SST 09309-35010

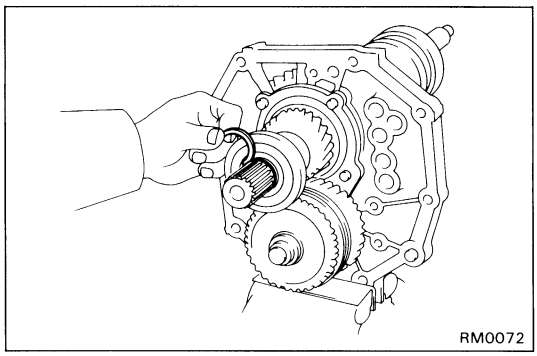

15. INSTALL SNAP RING

(a) Select a snap ring that will allow minimum axial play.

Mark	Thickness mm (in.)	Mark	Thickness mm (in.)
A	2.65 – 2.70 (0.1043 – 0.1063)	K	3.10 – 3.15 (0.1220 – 0.1240)
B	2.70 – 2.75 (0.1063 – 0.1083)	L	3.15 – 3.20 (0.1240 – 0.1260)
C	2.75 – 2.80 (0.1083 – 0.1102)	M	3.20 – 3.25 (0.1260 – 0.1280)
D	2.80 – 2.85 (0.1102 – 0.1122)	N	3.25 – 3.30 (0.1280 – 0.1299)
E	2.85 – 2.90 (0.1122 – 0.1142)	P	3.30 – 3.35 (0.1299 – 0.1319)
F	2.90 – 2.95 (0.1142 – 0.1161)	Q	3.35 – 3.40 (0.1319 – 0.1339)
G	2.95 – 3.00 (0.1161 – 0.1181)	R	3.40 – 3.45 (0.1339 – 0.1358)
H	3.00 – 3.05 (0.1181 – 0.1201)	S	3.45 – 3.50 (0.1358 – 0.1378)
J	3.05 – 3.10 (0.1201 – 0.1220)		

(b) Using a screwdriver and hammer, install the snap ring.

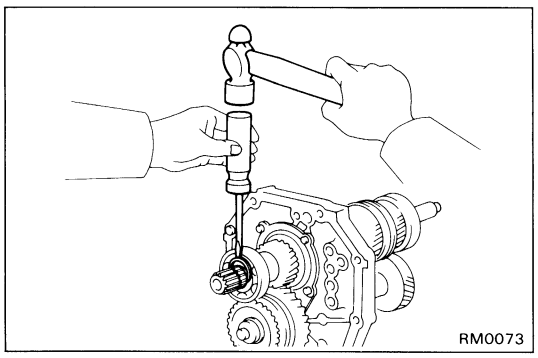

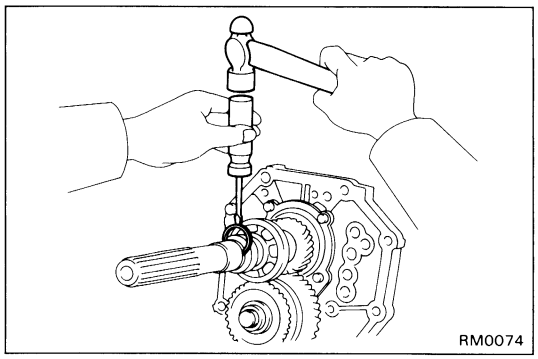

16. INSTALL SPEEDOMETER DRIVE GEAR

(a) Using a screwdriver and hammer, install the front snap ring.

(b) Install the ball and drive gear.

(c) Using a screwdriver and hammer, install the rear snap ring.

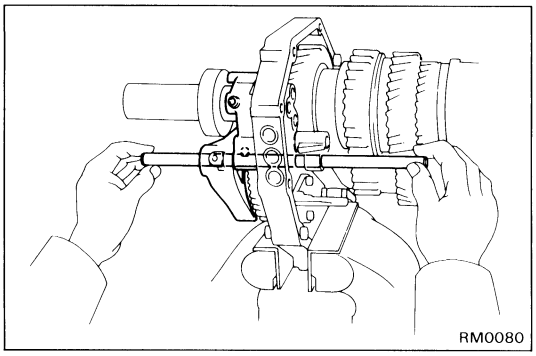

17. INSTALL NO.4 SHIFT FORK SHAFT, REVERSE SHIFT HEAD AND NO.3 SHIFT FORK

(a) Place No.3 shift fork into the groove of No.3 hub sleeve.

(b) Install No.4 shift fork shaft to No.3 shift fork, reverse shift head and shift fork through the intermediate plate.

(c) Install the locking ball into the reverse shift head.

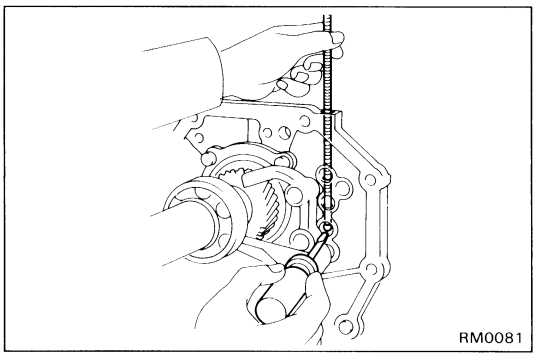

18. INSTALL NO.3 SHIFT FORK SHAFT AND NO.1 SHIFT FORK

(a) Using a magnetic finger and screwdriver, install the locking ball into the intermediate plate.

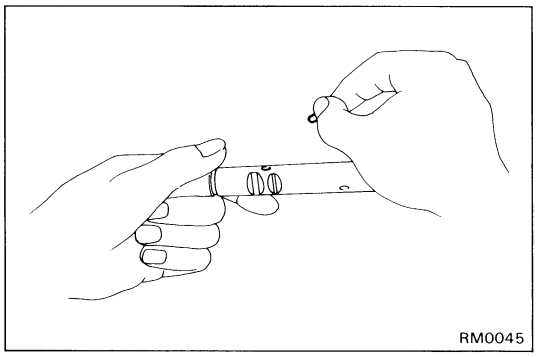

(b) Install the interlock pin into the shaft hole.

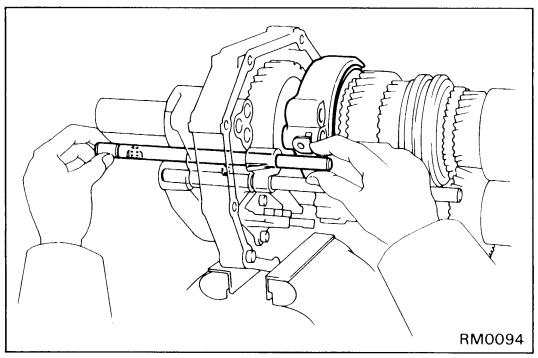

(c) Place No.1 shift fork into the groove of No.1 hub sleeve.

(d) Install No.3 fork shaft to the reverse shift fork and shift head through the intermediate plate.

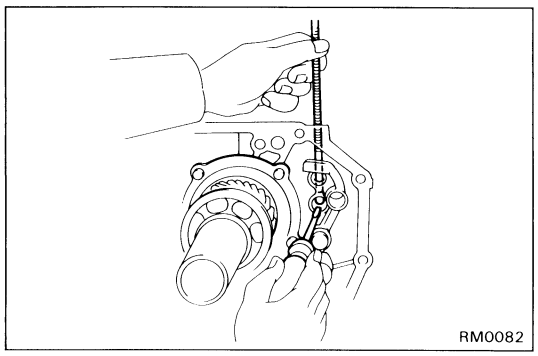

19. INSTALL NO.1 SHIFT FORK SHAFT

(a) Using a magnetic finger and screwdriver, install the interlock pin into the intermediate plate.

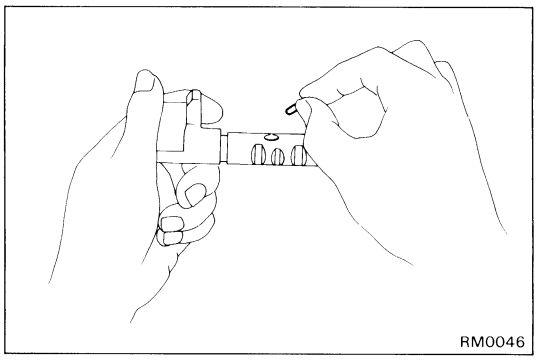

(b) Install the interlock pin into the shaft hole.

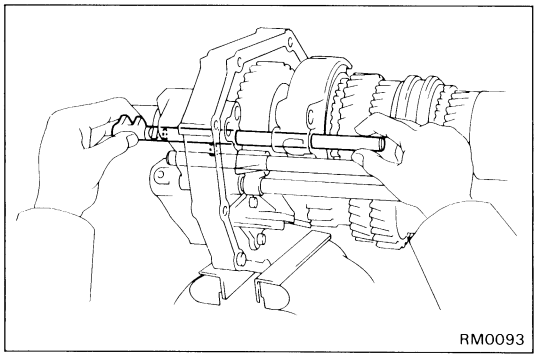

(c) Install No.1 fork shaft to No.1 shift fork through the intermediate plate.

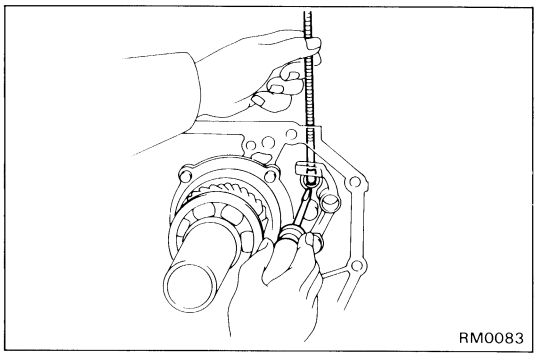

20. INSTALL NO.2 SHIFT FORK SHAFT AND SHIFT FORK

(a) Using a magnetic finger and screwdriver, install the interlock pin into the intermediate plate.

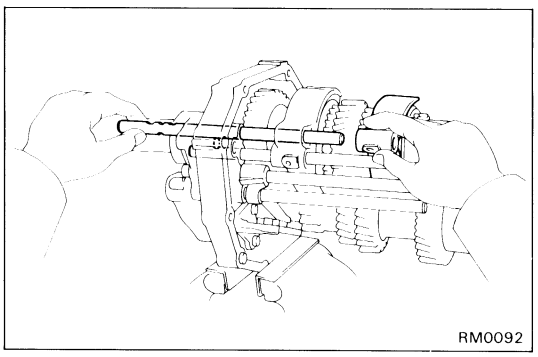

(b) Place No.2 shift fork into the groove of No.2 hub sleeve.

(c) Install No.2 fork shaft to No.1 and No.2 shift forks through the intermediate plate.

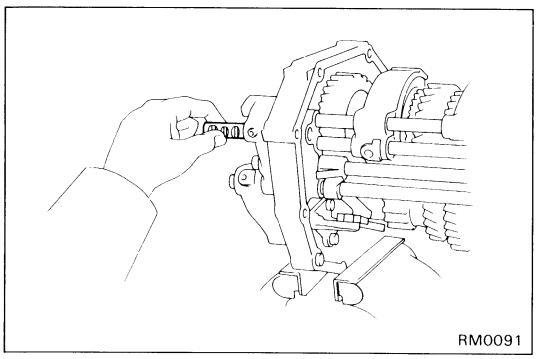

21. INSTALL NO.5 SHIFT FORK SHAFT

Install No.5 shift fork shaft to the reverse shift head through the intermediate plate.

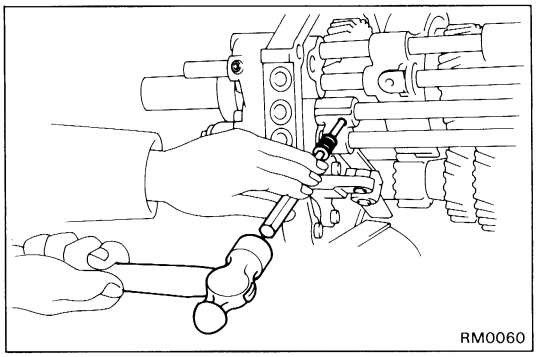

22. INSTALL SLOTTED SPRING PINS

Using a pin punch and hammer, drive in the two slotted spring pins to the reverse shift head and shift fork.

23. CHECK INTERLOCK

(a) Shift No.1 fork shaft to the 1st speed position.

(b) No.2, No.3, No.4 and No.5 fork shafts should not move.

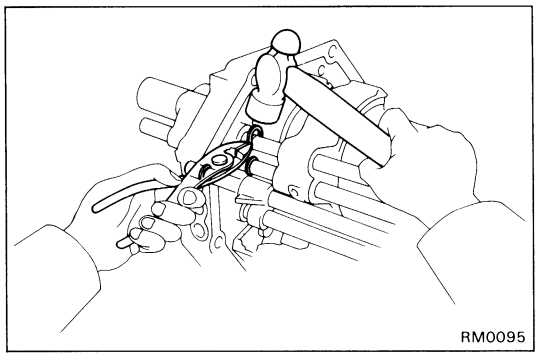

24. INSTALL SNAP RINGS

Using pliers and a hammer, install the three snap rings.

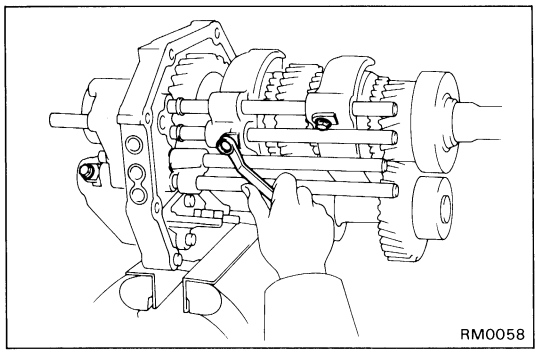

25. INSTALL SET BOLTS

Install and torque the three bolts.

Torque: 200 kg-cm (14 ft-lb, 20 N·m)

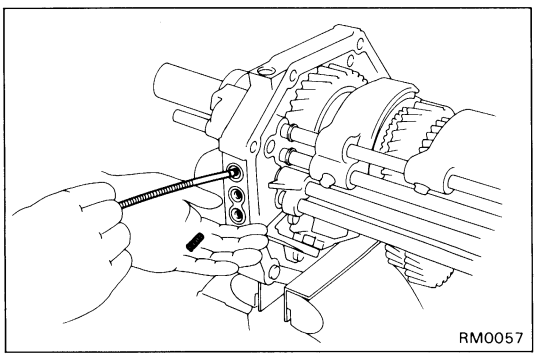

26. INSTALL LOCKING BALLS, SPRINGS AND SCREW PLUGS

(a) Apply liquid sealer to the plug threads.

Sealant: Part No.08833-00080, THREE BOND 1344, LOCTITE 242 or equivalent

(b) Install the four locking balls, springs and screw plugs.

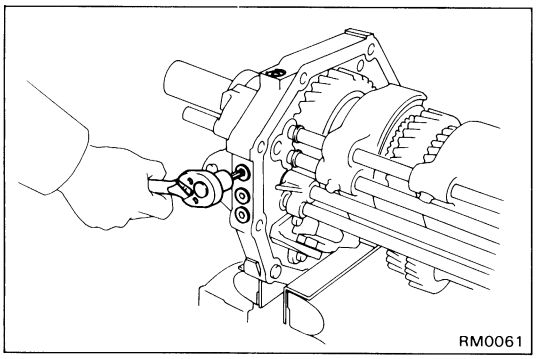

(c) Using a torx socket wrench, torque the screw plugs.

Torque: 190 kg-cm (14 ft-lb, 19 N·m)

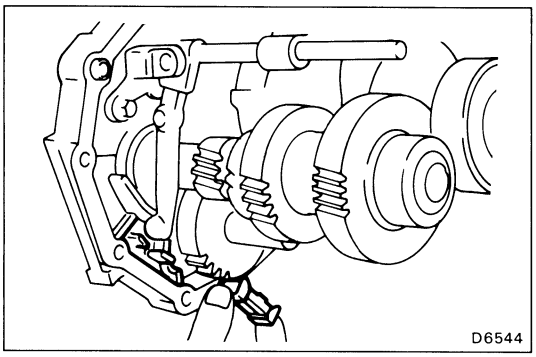

27. INSTALL MAGNET TO INTERMEDIATE PLATE

28. DISMOUNT INTERMEDIATE PLATE FROM VISE

(a) Dismount the intermediate plate from the vise.

(b) Remove the bolts, nuts and plate washers.

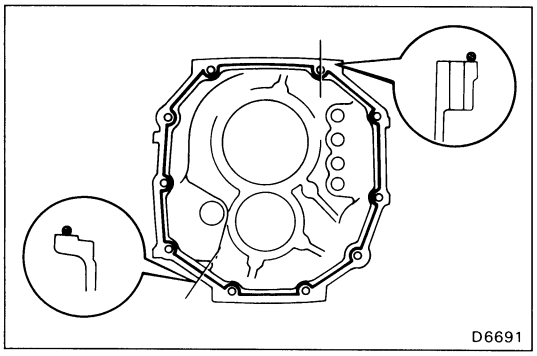

29. INSTALL TRANSMISSION CASE

(a) Apply seal packing to the transmission case as shown.

Seal packing: Part No.08826-00090, THREE BOND 1281 or equivalent

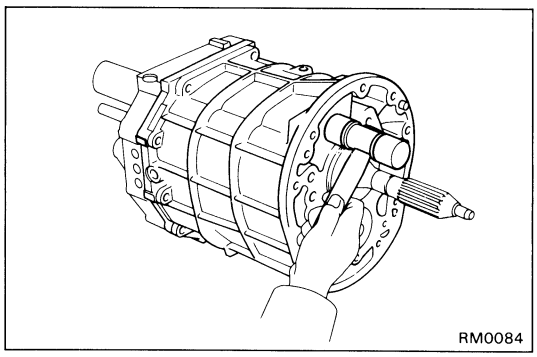

(b) Align each bearing outer race, each fork shaft end and reverse idler gear shaft end with the case installation holes, and install the case.

If necessary, tap on the case with a plastic hammer.

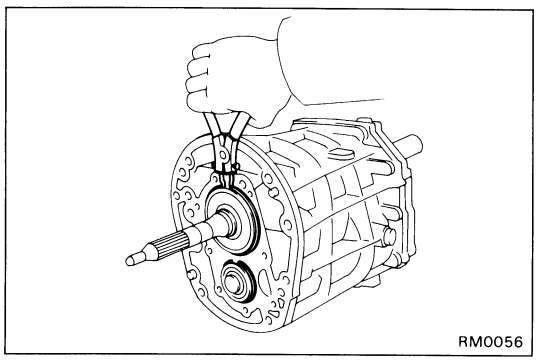

30. INSTALL BEARING SNAP RINGS

Using snap ring pliers, install the two snap rings to the input shaft bearing and counter gear front bearing.

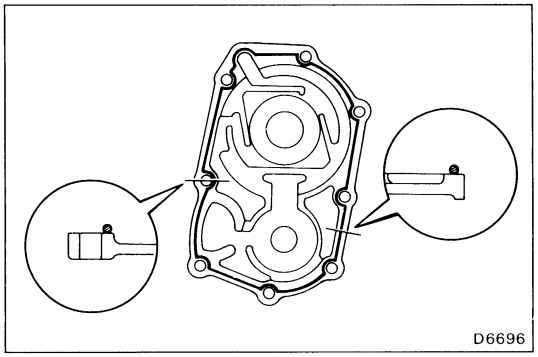

31. INSTALL FRONT BEARING RETAINER

(a) Apply seal packing to the retainer as shown, and install it to the transmission case.

Seal packing: Part No.08826-00090, THREE BOND 1281 or equivalent

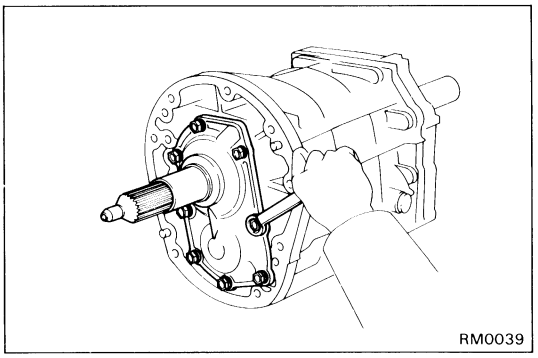

(b) Apply liquid sealer to the bolt threads.

Sealant: Part No.08833-00080, THREE BOND 1344, LOCTITE 242 or equivalent

(c) Install and torque the bolts.

Torque: 170 kg-cm (12 ft-lb, 17 N·m)

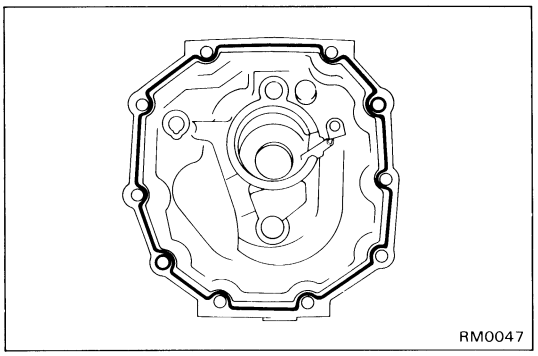

32. INSTALL EXTENSION HOUSING, SHIFT AND SELECT LEVER AND SHIFT LEVER HOUSING

(a) Apply seal packing to the extension housing as shown.

Seal packing: Part No.08826-00090, THREE BOND 1281 or equivalent

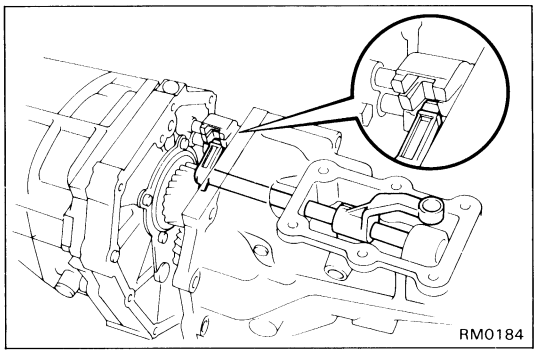

(b) Insert the shift and select lever into the extension housing.

(c) Connect the shift and select lever to the fork shaft and put in the shift lever housing.

(d) Align No.5 fork shaft to the extension housing installation hole and push in the extension housing.

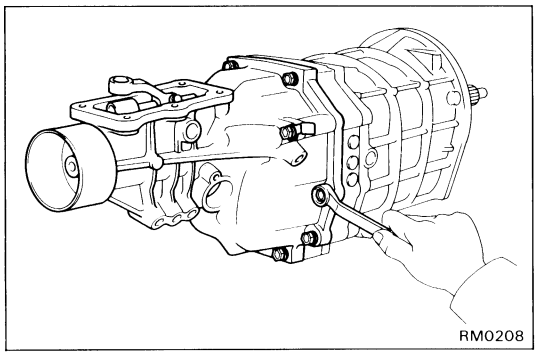

(e) Install and torque the extension housing bolts.

Torque: 380 kg-cm (27 ft-lb, 37 N·m)

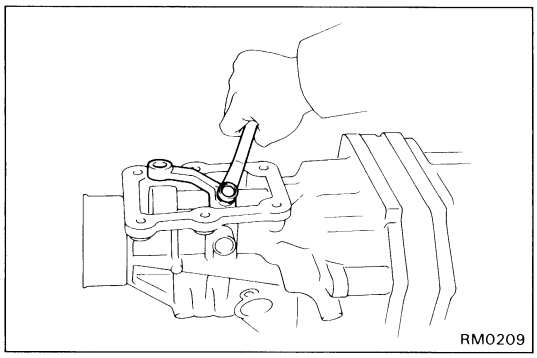

(f) Install and torque the shift lever housing bolt.

Torque: 390 kg-cm (28 ft-lb, 38 N·m)

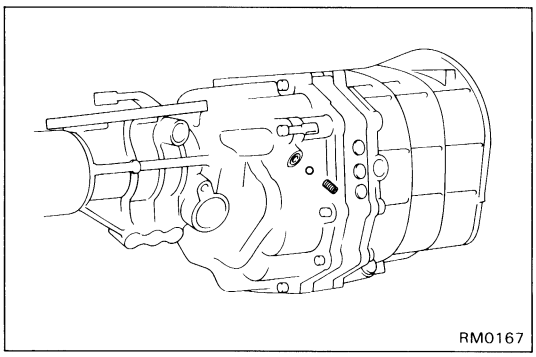

33. INSTALL LOCKING BALL, SPRING AND SCREW PLUG

(a) Apply liquid sealer to the plug threads.

Sealant: Part No.08833-00080, THREE BOND 1344, LOCTITE 242 or equivalent

(b) Install the locking ball, spring and plug.

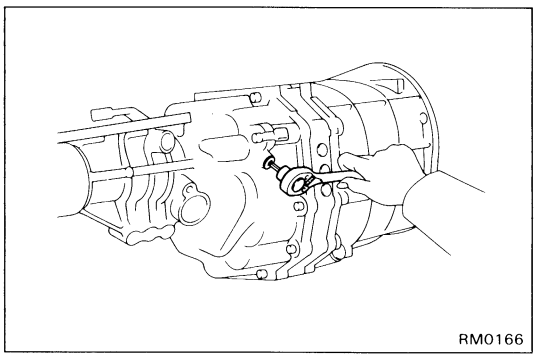

(c) Torque the plug.

Torque: 190 kg-cm (14 ft-lb, 19 N·m)

34. AFTER INSTALLING EXTENSION HOUSING OR TRANSFER ADAPTOR CHECK FOLLOWING ITEMS

(a) Check to see that the input and output shafts rotate smoothly.

(b) Check to see that shifting can be made smoothly to all positions.

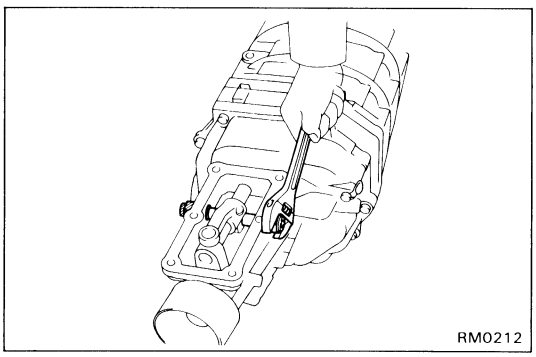

35. INSTALL RESTRICT PINS

(a) Install the black pin on the reverse gear/5th gear side.

(b) Install another pin and torque the pins.

Torque: 380 kg-cm (27 ft-lb, 37 N·m)

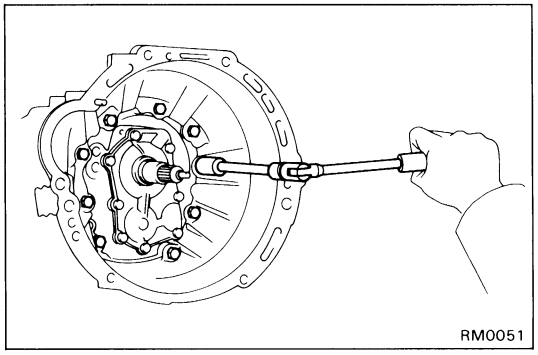

36. INSTALL CLUTCH HOUSING

(a) Install the clutch housing.

(b) Install and torque the nine bolts.

Torque: 370 kg-cm (27 ft-lb, 36 N·m)

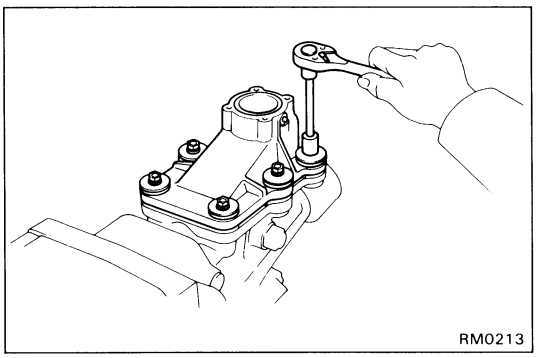

37. INSTALL SHIFT LEVER RETAINER

Torque: 160 kg-cm (12 ft-lb, 16 N·m)

39. INSTALL BACK-UP LIGHT SWITCH

Torque: 380 kg-cm (27 ft-lb, 37 N·m)

40. INSTALL SPEEDOMETER DRIVEN GEAR

41. INSTALL REAR SPEED SENSOR (w/ A.B.S.)

AUTOMATIC TRANSMISSION (A340E)

	Page
DESCRIPTION	AT-2
TROUBLESHOOTING	AT-9
Basic Troubleshooting	AT-9
General Troubleshooting	AT-10
Operating Mechanism for Each Gear	AT-12
Diagnosis System	AT-13
Preliminary Check	AT-18
Manual Shifting Test	AT-20
Electronic Control System	AT-21
Mechanical System Tests	AT-32
Automatic Shift Schedule	AT-40
Neutral Start Switch	AT-41
ON-VEHICLE REPAIR	AT-42
Valve Body	
Parking Lock Pawl	
Extension Housing	
Speedometer Driven Gear	
REMOVAL AND INSTALLATION OF TRANSMISSION	AT-43
TORQUE CONVERTER AND DRIVE PLATE	AT-45
REMOVAL OF COMPONENT PARTS	AT-46
COMPONENT PARTS	AT-65
General Notes	AT-65
Oil Pump	AT-66
Overdrive Planetary Gear, Overdrive Direct Clutch and Overdrive One-Way Clutch	AT-70
Overdrive Brake	AT-78
Direct Clutch	AT-82
Forward Clutch	AT-87
Second Coast Brake	AT-93
Front Planetary Gear	AT-95
Planetary Sun Gear and No. 1 One-Way Clutch	AT-96
Second Brake	AT-100
First and Reverse Brake	AT-103
Rear Planetary Gear, No. 2 One-Way Clutch and Output Shaft	AT-104
Valve Body	AT-109
• Disassembly of Valve Body	AT-109
• Upper Valve Body	AT-111
• Lower Valve Body	AT-114
• Assembly of Valve Body	AT-117
Transmission Case	AT-118
Extension Housing	AT-118
INSTALLATION OF COMPONENT PARTS	AT-119
SHIFT LOCK SYSTEM	AT-142

DESCRIPTION

GENERAL

The A340E is a 4-speed, Electronic Controlled Transmission (hereafter called ECT) developed for use with high-performance engines such as the 7M-GE and 7M-GTE. A lock-up mechanism is built into the torque converter.

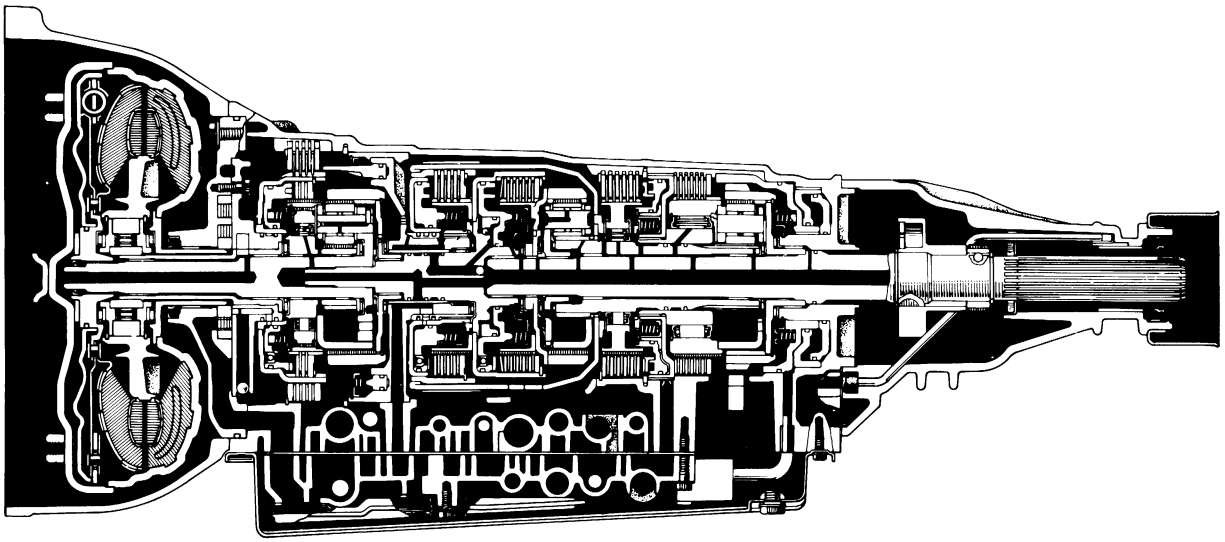

D1328

The A340E transmission is mainly composed of the torque converter, the overdrive (hereafter called O/D) planetary gear unit, 3-speed planetary gear unit, the hydraulic control system and the electronic control system.

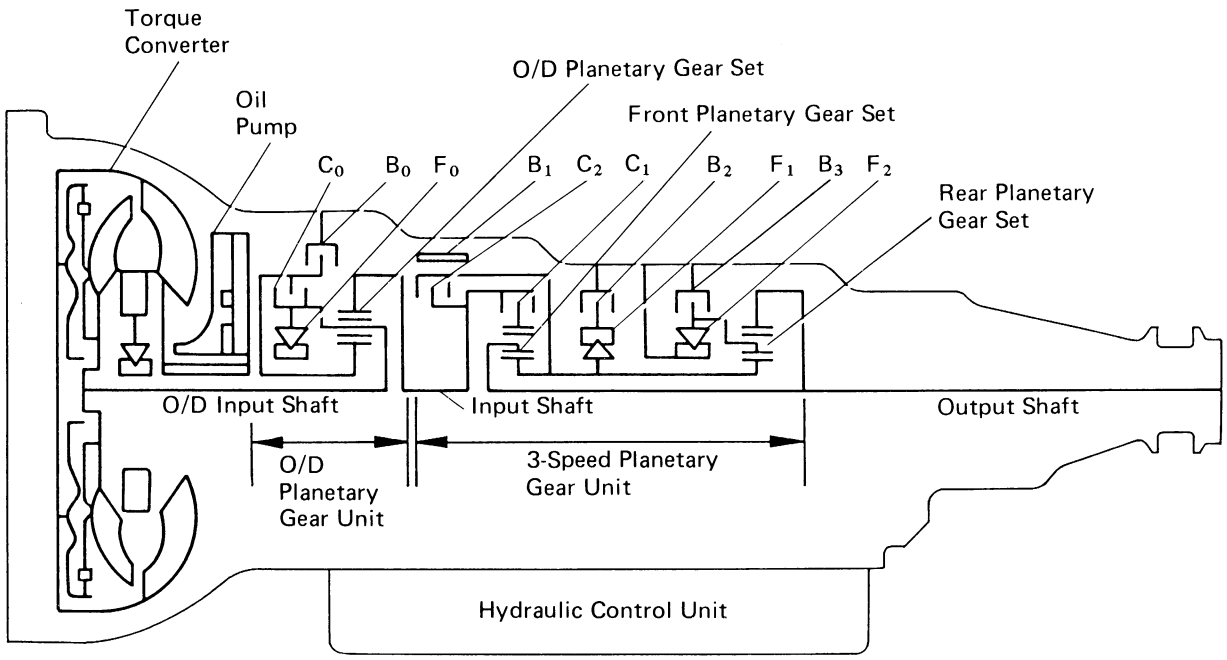

AT3253

Outline of ECT

The conventional automatic transmission operates by mechanically converting vehicle speed into governor pressure, and throttle opening into throttle pressure, and using these hydraulic pressures to control the operation of the clutches and brakes in the planetary gear unit, thus controlling the timing of up-shift and down-shift of the transmission. This is called the "hydraulic control method."

In the case of the ECT, on the other hand, sensors electronically sense the speed of the vehicle and the throttle opening and send these information to the electronic controlled unit (hereafter called ECU) in the form of electrical signals. The ECU then controls the operation of the clutches and brakes based on these data, thus controlling the timing of the shift points.

SHIFT CONTROL

- **Hydraulic Controlled Transmission**

  Shifting in the fully hydraulic controlled automatic transmission is carried out by the hydraulic control unit in the following way:

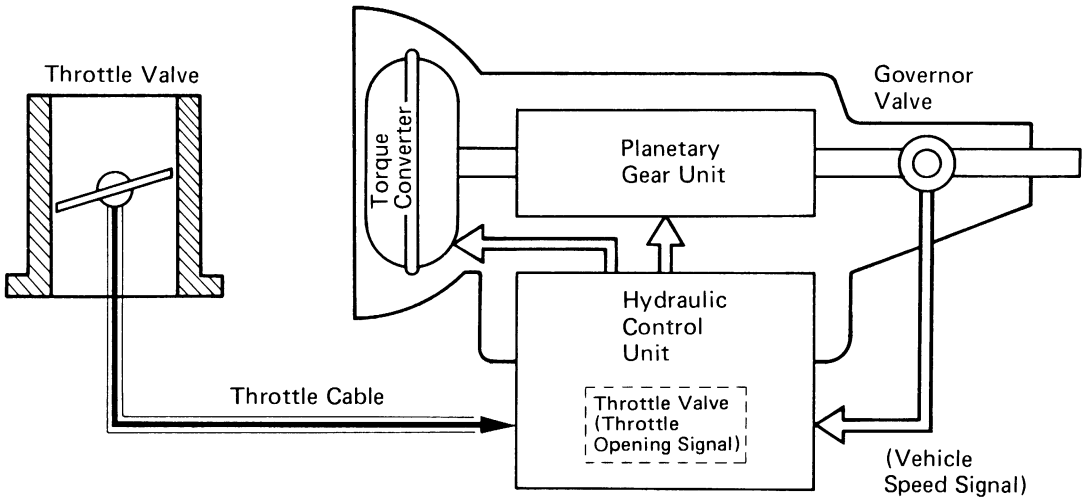

THROTTLE VALVE

The throttle valve in the hydraulic control unit generates hydraulic pressure in proportion to the amount that the accelerator pedal is depressed; this pressure (called "throttle pressure") acts as a throttle opening "signal" to the hydraulic control unit.

GOVERNOR VALVE

The governor valve generates hydraulic pressure in proportion to the speed of the vehicle; this pressure (called "governor pressure") acts as a vehicle speed "signal" to the hydraulic control unit.

HYDRAULIC CONTROL UNIT

Governor pressure and throttle pressure cause the shift valves in the hydraulic control unit to operate; the strengths of these pressures control the movements of these valves, and these valves control the fluid passage to the clutches and brakes in the planetary gear unit, which in turn control the shifting of the transmission.

- **ECT**

  Aside from having an ECU which controls shifting based upon electrical speed and throttle opening signals, the ECT is basically the same as a fully hydraulic controlled automatic transmission. The ECT controls shifting in the following manner:

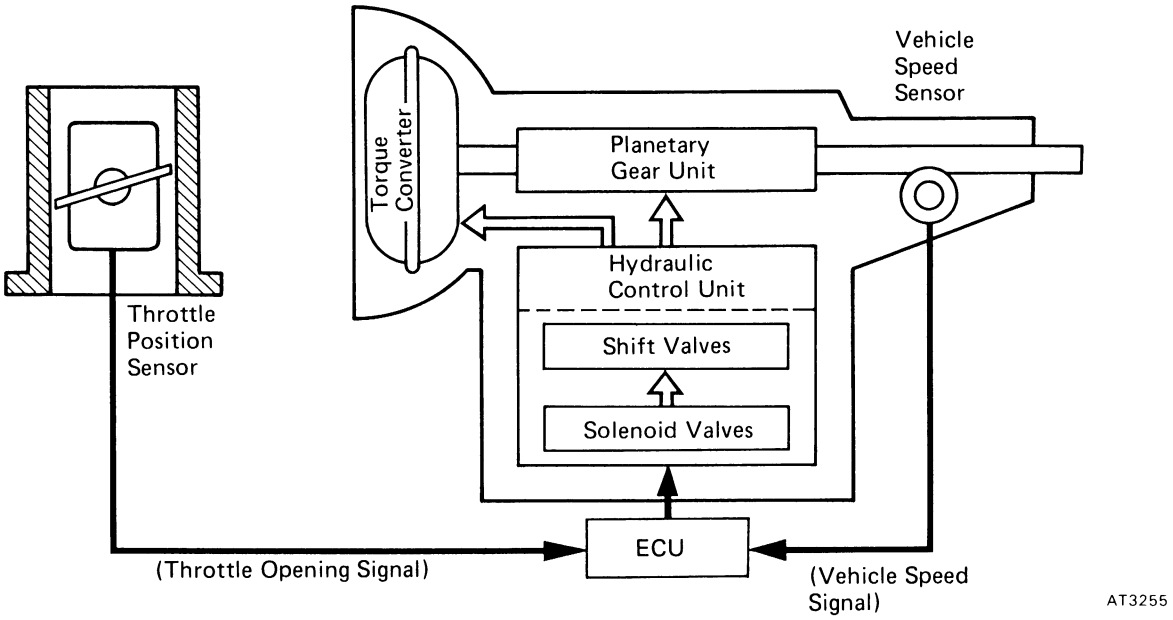

THROTTLE POSITION SENSOR

The throttle opening is sensed by the throttle position sensor, which sends this data to the ECU in the form of electrical signals.

VEHICLE SPEED SENSOR

The vehicle speed is sensed by the vehicle speed sensor, which sends this data to the ECU in the form of electrical signals.

ECU

The ECU determines the shift timing on the basis of the vehicle speed and throttle opening signals, and operates the solenoid valves in the hydraulic control unit, thus controlling the movement of the shift valves. These valves in turn control the fluid passage to the clutches and brakes in the planetary gear unit, which control the shifting of the transmission.

PLANETARY GEAR UNIT

The planetary gear unit is composed of three sets of planetary gears, three clutches which transmit power to the planetary gears, and four brakes and three one-way clutches which immobilize the planetary carrier and planetary sun gear.

Power from the engine transmitted the input shaft via the torque converter is then transmitted to the planetary gears by the operation of the clutches. By operation of the brakes and one-way clutches, either the planetary carrier or the planetary sun gear is immobilized, altering the speed of revolution of the planetary gear unit. Shift change is carried out by altering the combination of clutch and brake operation.

Each clutch and brake operates by hydraulic pressure; gear position is decided according to the throttle opening angle and vehicle speed, and shift change automatically occurs.

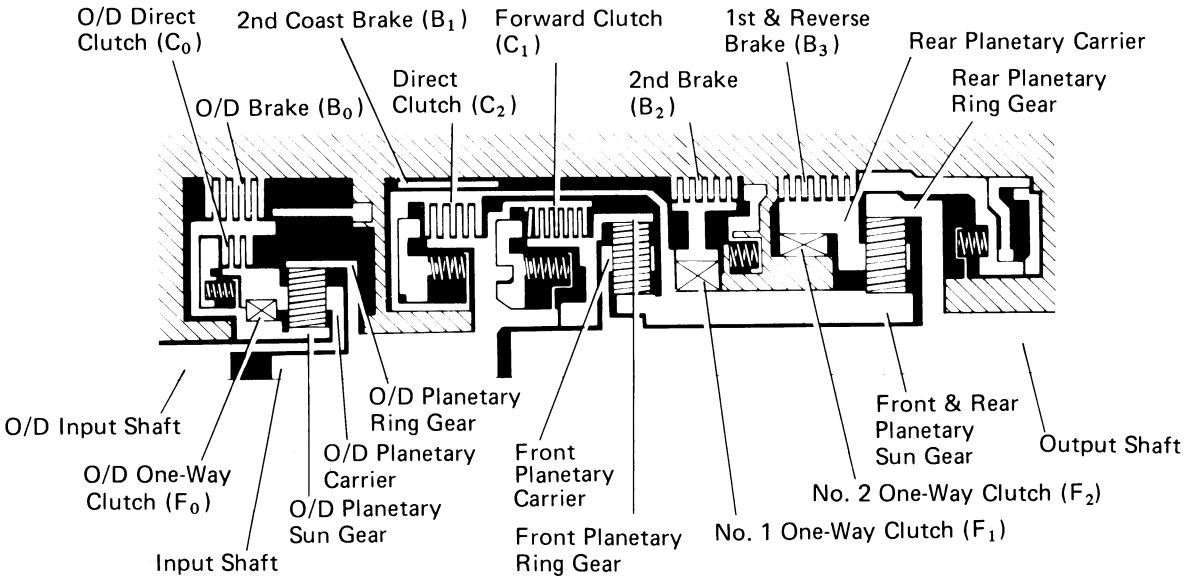

OPERATION OF EACH ELEMENT

NOMENCLATURE	OPERATION
O/D Direct Clutch (C_0)	Connects overdrive sun gear and overdrive carrier
O/D Brake (B_0)	Prevents overdrive sun gear from turning either clockwise or counterclockwise
O/D One-Way Clutch (F_0)	When transmission is being driven by engine, connects overdrive sun gear and overdrive carrier
Forward Clutch (C_1)	Connects input shaft and front planetary ring gear
Direct Clutch (C_2)	Connects input shaft and front & rear planetary sun gear
2nd Coast Brake (B_1)	Prevents front & rear planetary sun gear from turning either clockwise or counterclockwise
2nd Brake (B_2)	Prevents outer race of F_1 from turning either clockwise or counterclockwise, thus preventing front & rear planetary sun gear from turning counterclockwise
1st & Reverse Brake (B_3)	Prevents rear planetary carrier from turning either clockwise or counterclockwise
No. 1 One-Way Clutch (F_1)	When B_2 is operating, prevents front & rear planetary sun gear from turning counterclockwise
No. 2 One-Way Clutch (F_2)	Prevents rear planetary carrier from turning counterclockwise

OPERATING CONDITIONS FOR EACH GEAR
(See page AT-12)

HYDRAULIC CONTROL SYSTEM

The hydraulic control system is composed of the oil pump, the valve body, the solenoid valves, and the clutches and brakes, as well as the fluid passages which connect all of these components. Based on the hydraulic pressure created by the oil pump, the hydraulic control system governs the hydraulic pressure acting on the torque converter, clutches and brakes in accordance with the vehicle driving conditions.

There are three solenoid valves on the valve body. These solenoid valves are turned on and off by signals from the ECU to operate the shift valves. These shift valves then switch the fluid passages so that fluid goes to the torque converter and planetary gear units.

(Except for the solenoid valves, the hydraulic control system of the ECT is basically the same as that of the fully hydraulic controlled automatic transmission.)

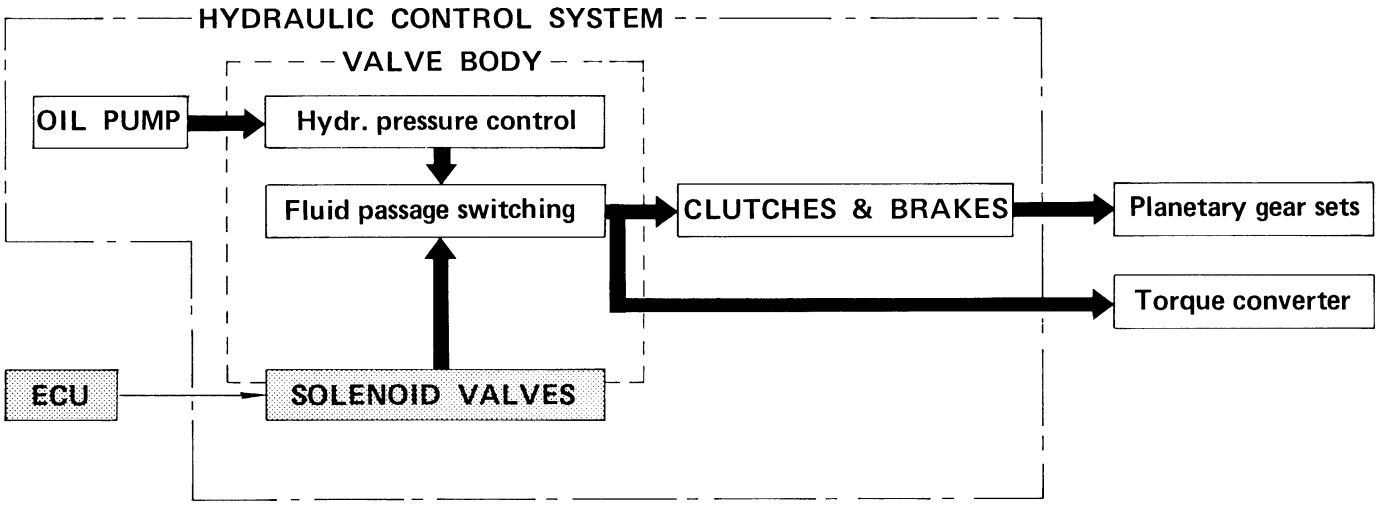

- **LINE PRESSURE**

  Line pressure is the most basic and important pressure used in the automatic transmission, because it is used to operate all of the clutches and brakes in the transmission.

  If the primary regulator valve does not operate correctly, line pressure will be either too high or too low. Line pressure that is too high will lead to shifting shock and consequent engine power loss due to the greater effort required of the oil pump; line pressure that is too low will cause slippage of clutches and brakes, which will, in extreme cases, prevent the vehicle from moving. Therefore, if either of these problems are noted, the line pressure should be measured to see if it is within standard.

- **THROTTLE PRESSURE**

  Throttle pressure is always kept in accordance with the opening angle of the engine throttle valve. This throttle pressure acts on the primary regulator valve and, accordingly, line pressure is regulated in response to the throttle valve opening.

  In the fully hydraulic controlled automatic transmission, throttle pressure is used for regulating line pressure and as signal pressure for up-shift and down-shift of the transmission. In the ECT, however, throttle pressure is used only for regulating line pressure. Consequently, improper adjustment of the transmission throttle cable may result in a line pressure that is too high or too low. This, in turn, will lead to shifting shock or clutch and brake slippage.

ELECTRONIC CONTROL SYSTEM

The electronic control system, which controls the shift points and the operation of the lock-up clutch, is composed of the following three parts:

1. **Sensors**

   These sensors sense the vehicle speed, throttle opening and other conditions and send this data to the ECU in the form of electrical signals.

2. **ECU**

   The ECU determines the shift and lock-up timing based upon the signals from sensors, and controls the solenoid valves of the hydraulic control unit accordingly.

3. **Actuators**

   These are three solenoid valves that control hydraulic pressure acting on the hydraulic valves to control shifting and lock-up timing.

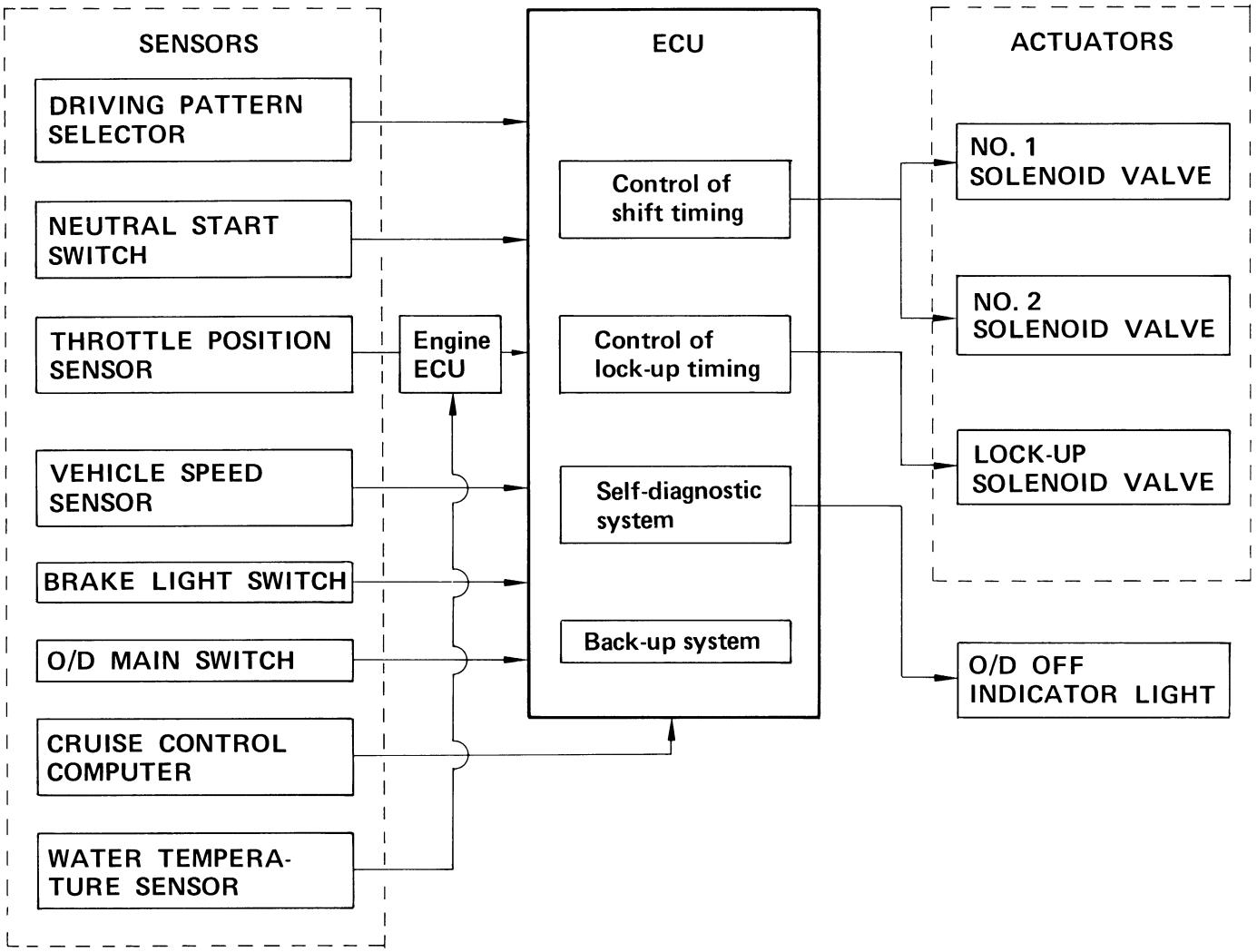

FUNCTION OF ECU

- **Control of Shift Timing**

The ECU has programmed into its memory the optimum shift pattern for each shift lever position (D, 2, L range) and driving mode (Normal or Power).

Based on the appropriate shift pattern, the ECU turns No. 1 and No. 2 solenoid valves on or off in accordance with the vehicle speed signal from the vehicle speed sensor and the throttle opening signal from the throttle position sensor. In this manner, the ECU operates each shift valve, opening or closing the fluid passages to the clutches and brakes to permit up-shift or down-shift of the transmission.

HINT: The electronic control system provides shift timing and lock-up control only while the vehicle is traveling forward. In REVERSE, PARK, and NEUTRAL, the transmission is mechanically, not electronically controlled.

- **Control of Overdrive**

Driving in overdrive is possible if the O/D main switch is on and the shift lever is in the D range. However, when the vehicle is being driven using the cruise control system (CCS), if the actual vehicle speed drops to about 4 km/h (2 mph) below the set speed while the vehicle is running in overdrive, the CCS computer sends a signal to the ECT ECU to release the overdrive and prevent the transmission from shifting back into overdrive until the actual vehicle speed reaches the speed set in the CCS memory.

On this model, if the coolant temperature falls below 60°C (140°F), the Engine ECU sends a signal to the ECT ECU, preventing the transmission from up-shifting into overdrive.

- **Control of Lock-Up System**

The ECT ECU has programmed in its memory a lock-up clutch operation pattern for each driving mode (Normal or Power). Based on this lock-up pattern, the ECU turns lock-up solenoid valve on or off in accordance with the vehicle speed signals received from the vehicle speed sensor and the throttle opening signals from the throttle position sensor.

Depending on whether lock-up solenoid valve is on or off, the lock-up relay valve performs changeover of the fluid passages for the converter pressure acting on the torque converter to engage or disengage the lock-up clutch.

(Mandatory Cancellation of Lock-up System)

If any of the following conditions exist, the ECU turns off lock-up solenoid valve to disengage the lock-up clutch.

1) The brake light switch comes on (during braking).
2) The IDL points of the throttle position sensor close (throttle valve fully closed).
3) The vehicle speed drops 4 km/h (2 mph) or more below the set speed while the cruise control system is operating.
4) The coolant temperature falls below 60°C (140°F) and vehicle speed is under 60 km/h (37 mph), or 35°C (95°F) and vehicle speed is under 40 km/h (25 mph).

The purpose of 1) and 2) above is to prevent the engine from stalling if the rear wheels lock up. The purpose of 3) is to cause the torque converter to operate to obtain torque multiplication. The purpose of 4) is both to improve general driveability, and to speed up transmission warm-up.

Also, while the lock-up system is in operation, the ECU will temporarily turn it off during up-shift or down-shift in order to decrease shifting shock.

TROUBLESHOOTING

Basic Troubleshooting

Before troubleshooting an ECT, first determine whether the problem is electrical or mechanical. To do this, just refer to the basic troubleshooting flow-chart provided below.

If the cause is already known, using the basic troubleshooting chart below along with the general troubleshooting chart on the following pages should speed the procedure.

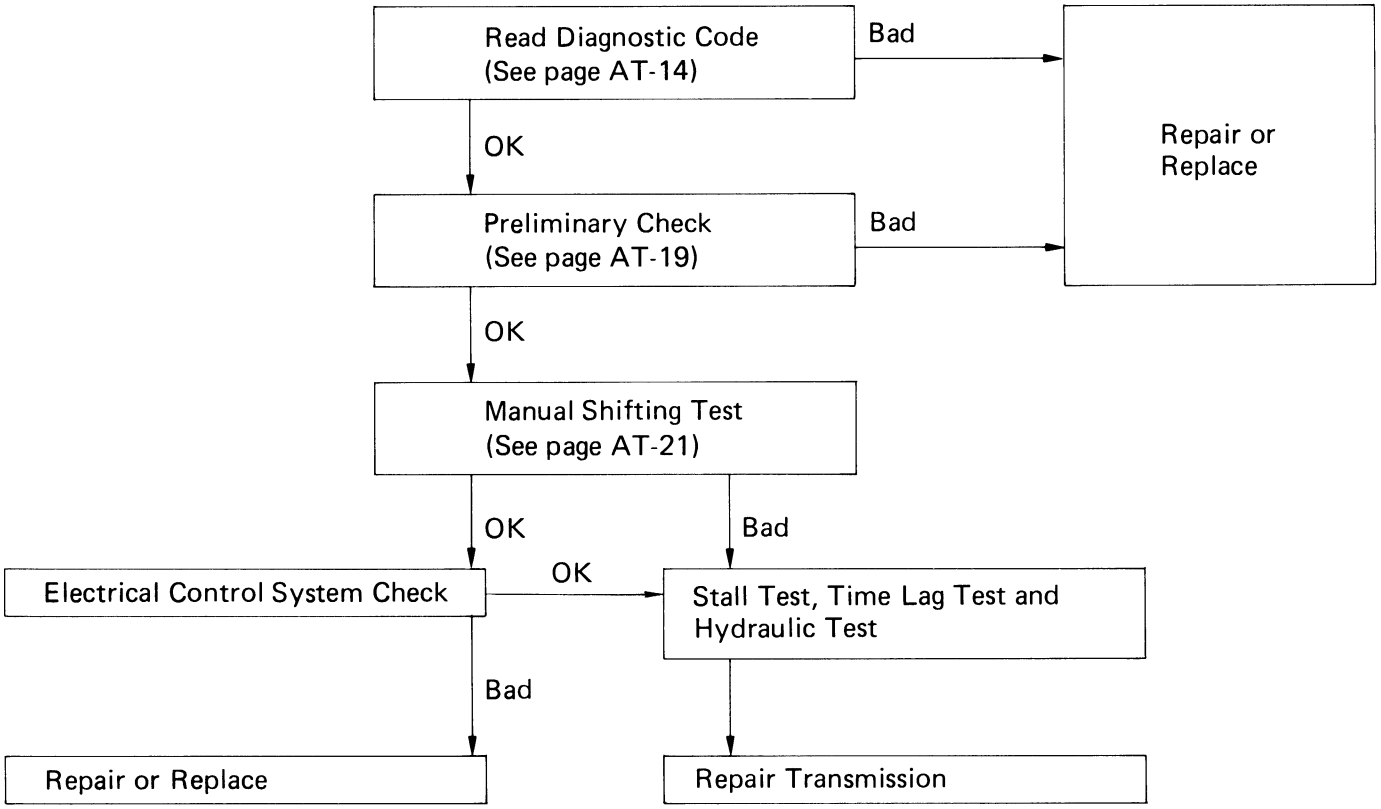

General Troubleshooting

Problem	Possible cause	Remedy	Page
Fluid discolored or smells burnt	Fluid contaminated	Replace fluid	AT-18
	Torque converter faulty	Replace torque converter	AT-43
	Transmission faulty	Disassemble and inspect transmission	AT-46
Vehicle does not move in any forward range or reverse	Manual linkage out of adjustment	Adjust linkage	AT-19
	Valve body or primary regulator faulty	Inspect valve body	AT-109
	Parking lock pawl faulty	Inspect parking lock pawl	AT-42
	Torque converter faulty	Replace torque converter	AT-43
	Converter drive plate broken	Replace drive plate	AT-43
	Oil pump intake screen blocked	Clean screen	AT-51
	Transmission faulty	Disassemble and inspect transmission	AT-46
Shift lever position incorrect	Manual linkage out of adjustment	Adjust linkage	AT-19
	Manual valve and lever faulty	Inspect valve body	AT-109
	Transmission faulty	Disassemble and inspect transmission	AT-46
Harsh engagement into any drive range	Throttle cable out of adjustment	Adjust throttle cable	AT-19
	Valve body or primary regulator faulty	Inspect valve body	AT-109
	Accumulator pistons faulty	Inspect accumulator pistons	AT-135, 136
	Transmission faulty	Disassemble and inspect transmission	AT-46
Delayed 1-2, 2-3 or 3-O/D up-shift, or down-shifts from O/D-3 or 3-2 and shifts back to O/D or 3	Electronic control faulty	Inspect electronic control	AT-21
	Valve body faulty	Inspect valve body	AT-109
	Solenoid valve faulty	Inspect solenoid valve	AT-30
Slips on 1-2, 2-3 or 3-O/D up-shift, or slips or shudders on acceleration	Manual linkage out of adjustment	Adjust linkage	AT-19
	Throttle cable out of adjustment	Adjust throttle cable	AT-19
	Valve body faulty	Inspect valve body	AT-109
	Solenoid valve faulty	Inspect solenoid valve	AT-30
	Transmission faulty	Disassemble and inspect transmission	AT-46
Drag, binding or tie-up on 1-2, 2-3 or 3-O/D up-shift	Manual linkage out of adjustment	Adjust linkage	AT-19
	Valve body faulty	Inspect valve body	AT-109
	Transmission faulty	Disassemble and inspect transmission	AT-46

General Troubleshooting (Cont'd)

Problem	Possible cause	Remedy	Page
No lock-up in 2nd, 3rd or O/D	Electronic control faulty	Inspect electronic control	AT-21
	Valve body faulty	Inspect valve body	AT-109
	Solenoid valve faulty	Inspect solenoid valve	AT-30
	Transmission faulty	Disassemble and inspect transmission	AT-46
Harsh down-shift	Throttle cable out of adjustment	Adjust throttle cable	AT-19
	Throttle cable and cam faulty	Inspect throttle cable and cam	AT-136
	Accumulator pistons faulty	Inspect accumulator pistons	AT-135, 136
	Valve body faulty	Inspect valve body	AT-109
	Transmission faulty	Disassemble and inspect transmission	AT-46
No down-shift when coasting	Valve body faulty	Inspect valve body	AT-109
	Solenoid valve faulty	Inspect solenoid valve	AT-30
	Electronic control faulty	Inspect electronic control	AT-21
Down-shift occurs too quickly or too late while coasting	Throttle cable faulty	Inspect throttle cable	AT-19
	Valve body faulty	Inspect valve body	AT-109
	Transmission faulty	Disassemble and inspect transmission	AT-46
	Solenoid valve faulty	Inspect solenoid valve	AT-30
	Electronic control faulty	Inspect electronic control	AT-21
No O/D-3, 3-2 or 2-1 kick-down	Solenoid valve faulty	Inspect solenoid valve	AT-30
	Electronic control faulty	Inspect electronic control	AT-21
	Valve body faulty	Inspect valve body	AT-109
No engine braking in 2 or L range	Solenoid valve faulty	Inspect solenoid valve	AT-30
	Electronic control faulty	Inspect electronic control	AT-21
	Valve body faulty	Inspect valve body	AT-109
	Transmission faulty	Disassemble and inspect transmission	AT-46
Vehicle does not hold in P	Manual linkage out of adjustment	Adjust linkage	AT-19
	Parking lock pawl cam and spring faulty	Inspect cam and spring	AT-42

Operating Mechanism for Each Gear

1. CLUTCH, BRAKE AND ONE-WAY CLUTCH

○ ..... Operating

Shift lever position	Gear position	C_0	C_1	C_2	B_0	B_1	B_2	B_3		F_0	F_1	F_2
								I.P.	O.P.			
P	Parking	○										
R	Reverse	○		○				○	○	○		
N	Neutral	○										
D	1st	○	○							○		○
	2nd	○	○				○			○	○	
	3rd	○	○	○			○			○		
	O/D		○	○	○		○					
2	1st	○	○							○		○
	2nd	○	○			○	○			○	○	
	3rd	○	○	○			○			○		
L	1st	○	○					○	○	○		○
	*2nd	○	○			○	○			○	○	

* Down-shift only in the L range and 2nd gear — no up-shift.

I.P. ..... Inner Piston
O.P..... Outer Piston

2. SOLENOID

Possible gear positions in accordance with solenoid operating conditions.

Range	NORMAL			NO. 1 SOLENOID MALFUNCTIONING			NO. 2 SOLENOID MALFUNCTIONING			BOTH SOLENOIDS MALFUNCTIONING		
	Solenoid Valve		Gear	Solenoid Valve		Gear	Solenoid Valve		Gear	Solenoid Valve		Gear
	No. 1	No. 2	Position	No. 1	No. 2	Position	No. 1	No. 2	Position	No. 1	No. 2	Position
D range	ON	OFF	1st	X	ON (OFF)	3rd (O/D)	ON	X	1st	X	X	O/D
	ON	ON	2nd	X	ON	3rd	OFF (ON)	X	O/D (1st)	X	X	O/D
	OFF	ON	3rd	X	ON	3rd	OFF	X	O/D	X	X	O/D
	OFF	OFF	O/D	X	OFF	O/D	OFF	X	O/D	X	X	O/D
2 range	ON	OFF	1st	X	ON (OFF)	3rd (O/D)	ON	X	1st	X	X	3rd
	ON	ON	2nd	X	ON	3rd	OFF (ON)	X	3rd (1st)	X	X	3rd
	OFF	ON	3rd	X	ON	3rd	OFF	X	3rd	X	X	3rd
L range	ON	OFF	1st	X	OFF	1st	ON	X	1st	X	X	1st
	ON	ON	2nd	X	ON	2nd	ON	X	1st	X	X	1st

( ): No fail-safe function X : Malfunctions

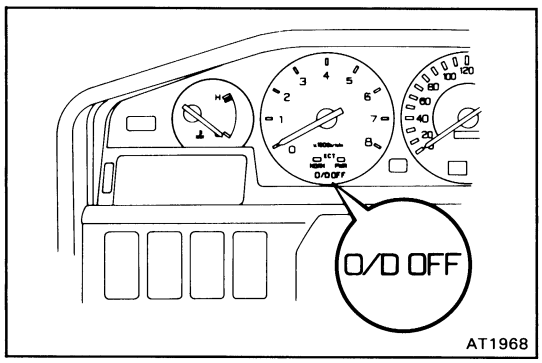

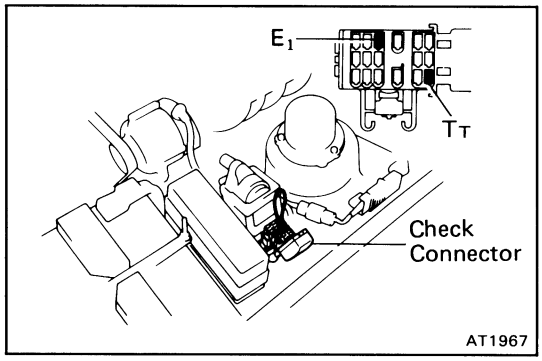

Diagnosis System

DESCRIPTION

1. A self-diagnosis function is built into the electrical control system. Warning is indicated by the overdrive OFF indicator light.

   HINT: Warning and diagnostic codes can be read only when the overdrive switch is ON. If OFF, the overdrive OFF light is lit continuously and will not blink.

   (a) If a malfunction occurs within the speed sensors (No. 1 or 2) or solenoids (No. 1 or 2), the overdrive OFF light will blink to warn the driver.
   However, there will be no warning of a malfunction with lock-up solenoid.

   (b) The diagnostic code can be read by the number of blinks of the overdrive OFF indicator light when connect check terminals T_T and E_1. (See page AT-14)

   (c) The throttle position sensor or brake signal are not indicated, but inspection can be made by checking the voltage at terminal T_T of the check connector (diagnosis).

   (d) The signals to each gear can be checked by measuring the voltage at terminal T_T of the check connector while driving.

2. The diagnostic code (trouble code) is retained in memory by the CPU (of ECT ECU) and due to back-up voltage, is not canceled out when the engine is turned off. Consequently, after repair, it is necessary to turn the ignition switch off and remove the fuse DOME (20A) or disconnect the ECT ECU connector to cancel out the diagnostic (trouble) code. (See page AT-15)

   HINT:
   - Low battery voltage will cause faulty operation of the diagnosis system. Therefore, always check the battery first.
   - Use a voltmeter and ohmmeter that have an impedance of at least 10kΩ/V.

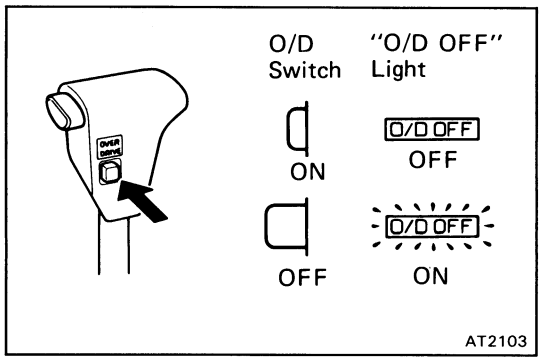

CHECK "O/D OFF" INDICATOR LIGHT

1. Turn the ignition switch ON.
2. The "O/D OFF" light will come on when the O/D switch is placed at OFF.
3. When the O/D switch is set to ON, the "O/D OFF" light should go out.

If the "O/D OFF" light flashes when the O/D switch is set to ON, the electronic control system is faulty.

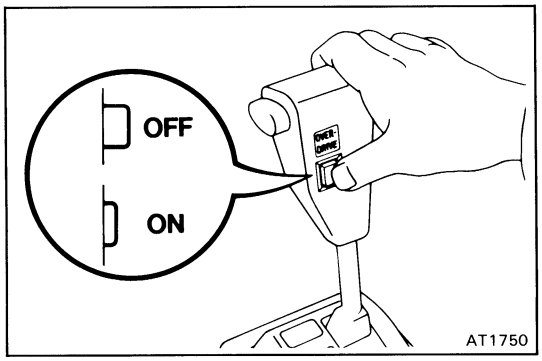

READ DIAGNOSTIC CODE

1. TURN IGNITION SWITCH AND O/D SWITCH TO ON

Do not start the engine.

HINT: Warning and diagnostic codes can be read only when the overdrive switch is ON. If OFF, the overdrive OFF light will light continuously and will not blink.

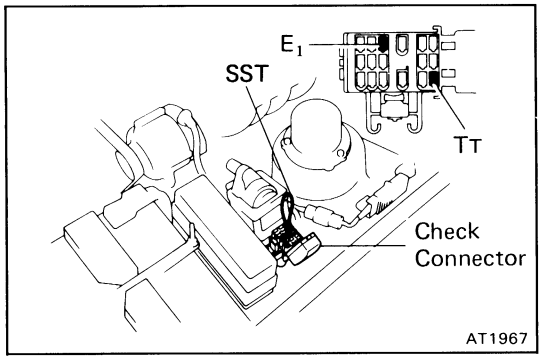

2. CONNECT T_T AND E_1 TERMINALS OF CHECK CONNECTOR

Using SST, connect terminals T_T and E_1 of the check connector.

SST 09843-18020

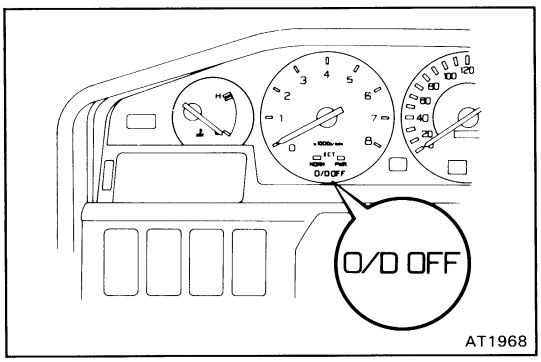

3. READ DIAGNOSTIC CODE

Read the diagnostic code as indicated by the number of times the O/D OFF light flashes.

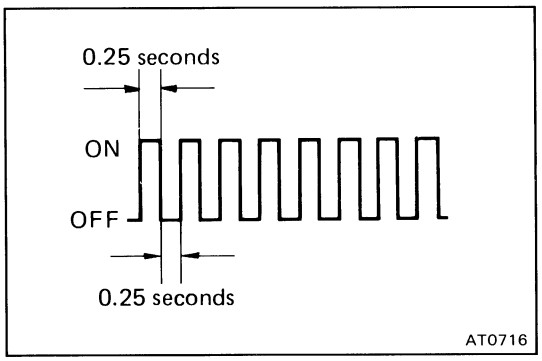

(Diagnostic Code Indication)

- If the system is operating normally, the light will flash 2 times per second.

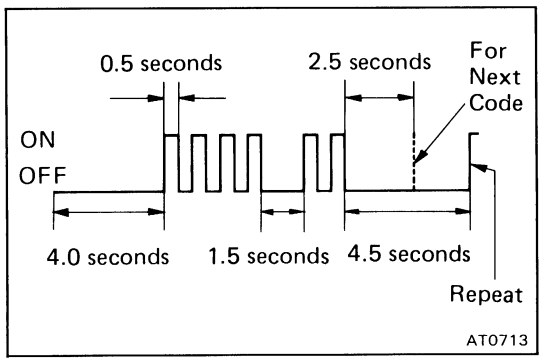

- In the event of a malfunction, the light will flash 1 time per second. The number of blinks will equal the first number and, after 1.5 seconds pause, the second number of the two digit diagnostic code. If there are two or more codes, there will be a 2.5 seconds pause between each.

HINT: In the event of several trouble codes occuring simultaneously, indication will begin from the smaller value and continue to the larger.

4. REMOVE SST

DIAGNOSTIC CODES

Code No.	Light Pattern	Diagnosis System
–		Normal
42		Defective No. 1 speed sensor (in combination meter) – severed wire harness or short circuit
61		Defective No. 2 speed sensor (in ATM) – severed wire harness or short circuit
62		Severed No. 1 solenoid or short circuit – severed wire harness or short circuit
63		Severed No. 2 solenoid or short circuit – severed wire harness or short circuit
64		Severed lock-up solenoid or short circuit – severed wire harness or short circuit

AT2020

HINT: If codes 62, 63 or 64 appear, there is an electrical malfunction in the solenoid.

Causes due to mechanical failure, such as a stuck valve, will not appear.

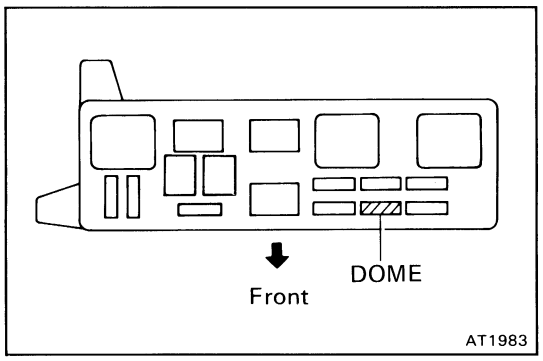

CANCEL OUT DIAGNOSTIC CODE

1. After repair of the trouble area, the diagnostic code retained in memory by the ECT ECU must be canceled by removing the fuse DOME (20A) for 10 seconds or more, depending on ambient temperature (the lower the temperature, the longer the fuse must be left out) with the ignition switch OFF.

   HINT:
   - Cancellation can be also done by removing the battery negative (—) terminal, but in this case other memory systems (TCCS diagnosis memory, etc.) will be also canceled out.
   - The diagnostic code can be also canceled out by disconnecting the ECT ECU connector.
   - If the diagnostic code is not canceled out, it will be retained by the ECT ECU and appear along with a new code in event of future trouble.
2. After cancellation, perform a road test to confirm that a ''normal code'' is now read on the O/D OFF light.

TROUBLESHOOTING FLOW-CHART

HINT:

- If diagnostic code Nos. 42, 61, 62 or 63 are output, the overdrive OFF indicator light will begin to blink immediately to warn the driver. However, an impact or shock may cause the blinking to stop; but the code will still be retained in the ECT ECU memory until canceled out.
- There is no warning for diagnostic code No. 64.
- In the event of a simultaneous malfunction of both No. 1 and No. 2 speed sensors, no diagnostic code will appear and the fail-safe system will not function. However, when driving in the D range, the transmission will not up-shift from first gear, regardless of the vehicle speed.

Diagnostic code 42 (No. 1 speed sensor circuitry)

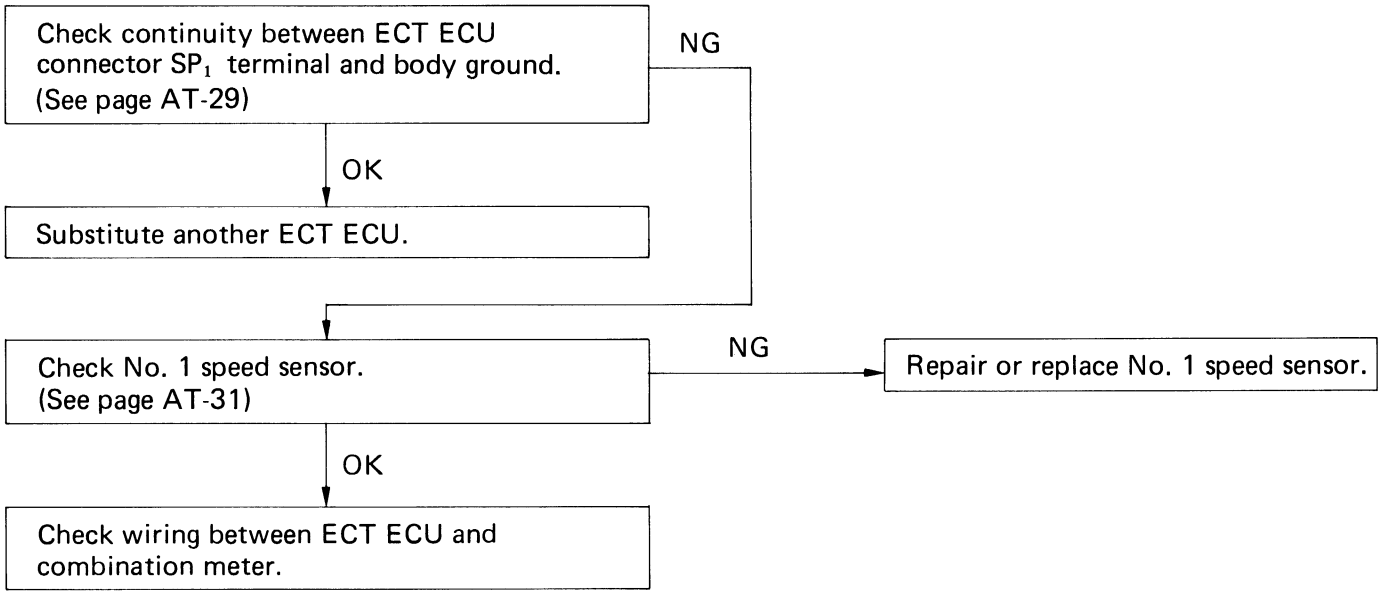

Diagnostic code 61 (No. 2 speed sensor circuitry)

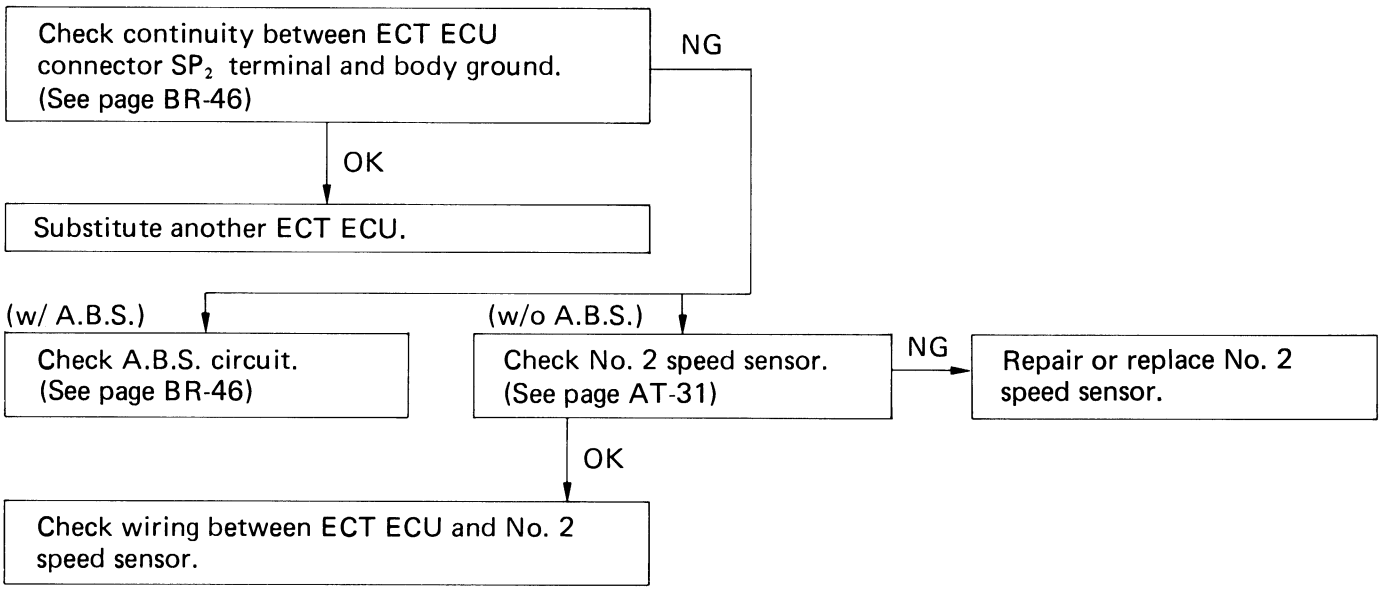

Diagnostic code 62 (No. 1 solenoid valve circuitry)

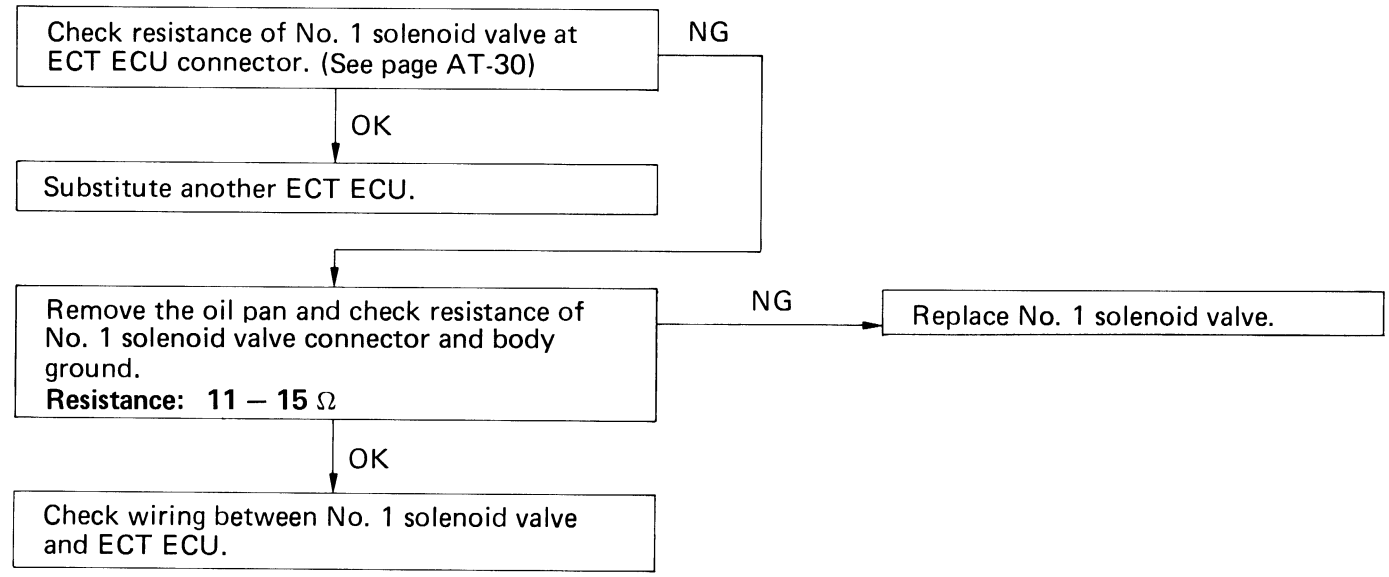

Diagnostic code 63 (No. 2 solenoid valve circuitry)

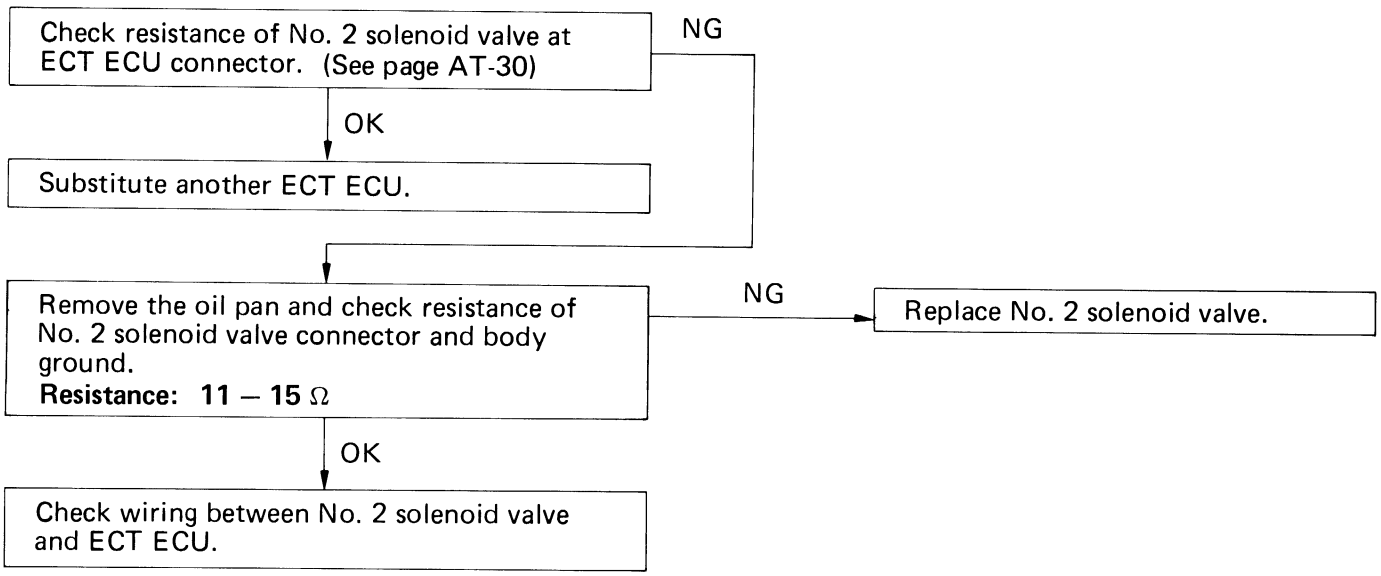

Diagnostic code 64 (Lock-up solenoid valve circuitry)

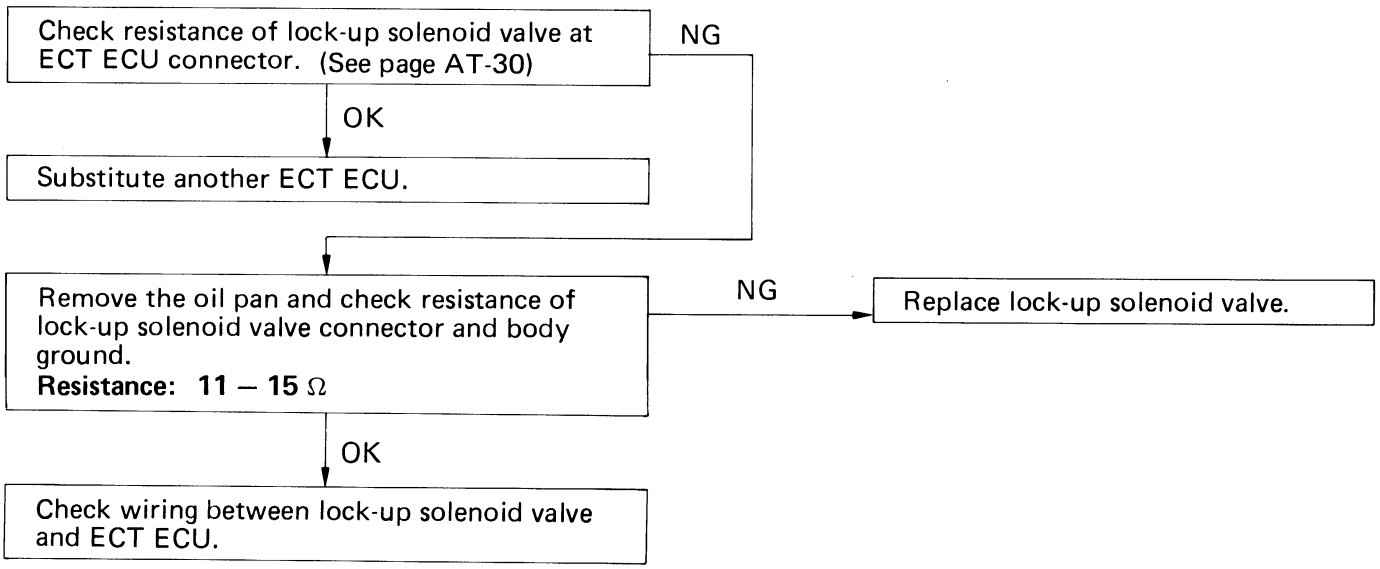

Preliminary Check

1. CHECK FLUID LEVEL

HINT:

- The vehicle must have been driven so that the engine and transmission are at normal operating temperature. (Fluid temperature: 70 — 80°C or 158 — 176°F)
- Only use the COOL range on the dipstick as a rough referance when the fluid is replaced or the engine does not run.

(a) Park the vehicle on a level surface, set the parking brake.

(b) With the engine idling, shift the shift lever into all positions from P to L position and return to P position.

(c) Pull out the transmission dipstick and wipe it clean.

(d) Push it back fully into the tube.

(e) Pull it out and check that the fluid level is in the HOT range.

If the level is at the low side, add fluid.

Fluid type: ATF DEXRON® II

NOTICE: Do not overfill.

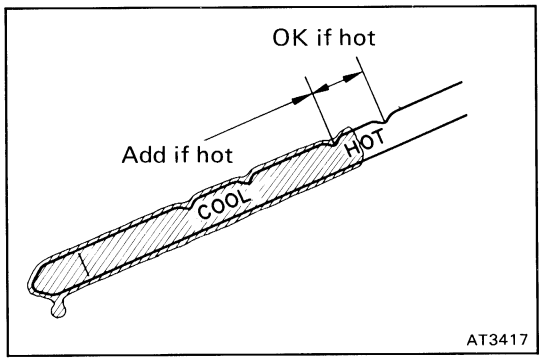

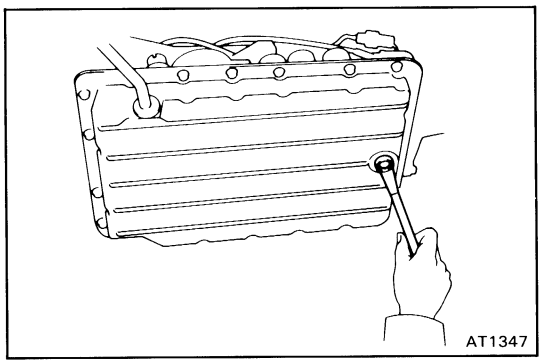

2. CHECK FLUID CONDITION

If the fluid smells burnt or is black, replace it as following procedures.

(a) Remove the drain plug and drain the fluid.

(b) Reinstall the drain plug securely.

(c) With the engine OFF, add new fluid through the oil filler tube.

Fluid type: ATF DEXRON® II

Capacity:

Total: 7.2 liters (7.6 US qts, 6.3 Imp.qts)

Drain and refill: 1.6 liters (1.7 US qts, 1.4 Imp.qts)

(d) Start the engine and shift the shift lever into all positions from P to L position and then shift into P position.

(e) With the engine idling, check the fluid level. Add fluid up to the COOL level on the dipstick.

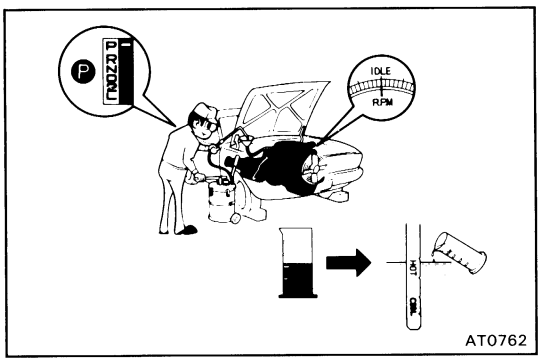

(f) Check the fluid level with the normal operating temperature (70 — 80°C or 158 — 176°F) and add as necessary.

NOTICE: Do not overfill.

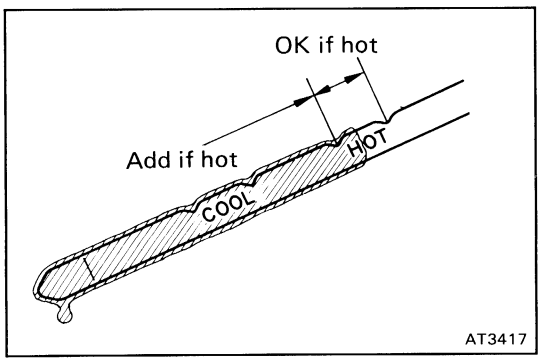

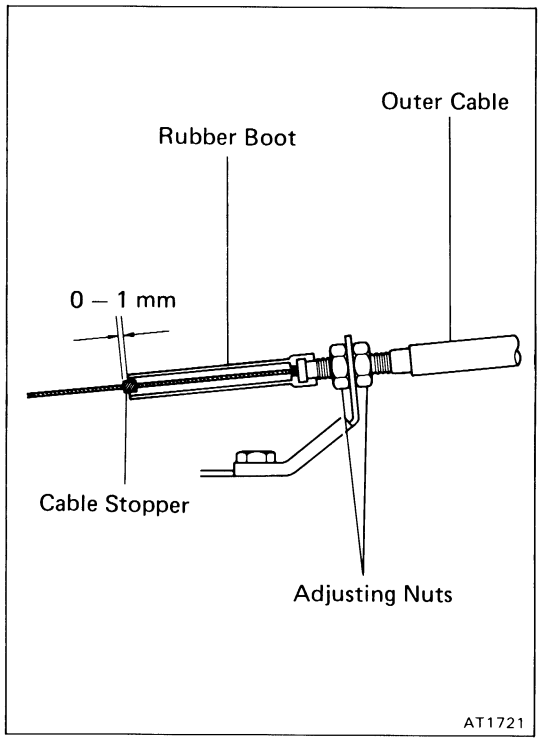

3. INSPECT THROTTLE CABLE

(a) Depress the accelerator pedal all the way and check that the throttle valve opens fully.

HINT: If the valve does not open fully, adjust the accelerator cable.

(b) Fully depress the accelerator pedal.

(c) Measure the distance between the end of the boot and stopper on the cable.

Standard distance: 0 – 1 mm (0 – 0.04 in.)

If the distance is not standard, adjust the cable by the adjusting nuts.

4. INSPECT SHIFT LEVER POSITION

When shifting the shift lever from the N position to other positions, check that the lever can be shifted smoothly and accurately to each position and that the position indicator correctly indicates the position.

If the indicator is not aligned with the correct position, carry out the following adjustment procedures.

(a) Loosen the nut on the shift lever.

(b) Push the control shaft lever fully rearward.

(c) Return the control shaft lever two notches to N position.

(d) Set the shift lever to N position.

(e) While holding the shift lever lightly toward the R position side, tighten the shift lever nut.

(f) Start the engine and make sure that the vehicle moves forward when shifting the lever from the N to D position and reverse when shifting it to the R position.

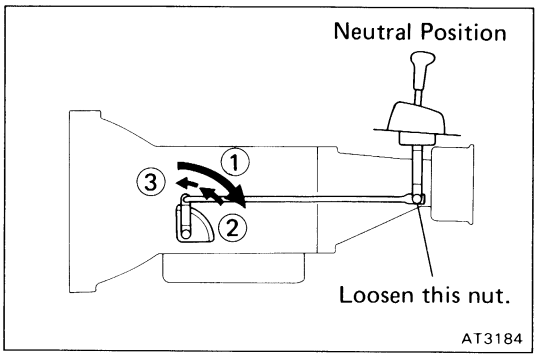

5. INSPECT NEUTRAL START SWITCH

Check that the engine can be started with the shift lever only in the N or P position, but not in other positions.

If not as stated above, carry out the following adjustment procedures.

(a) Loosen the neutral start switch bolt and set the shift lever to the N position.

(b) Align the groove and neutral basic line.

(c) Hold in position and tighten the bolt.

Torque: 130 kg-cm (9 ft-lb, 13 N·m)

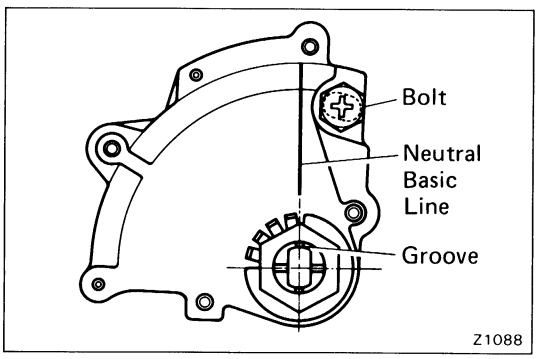

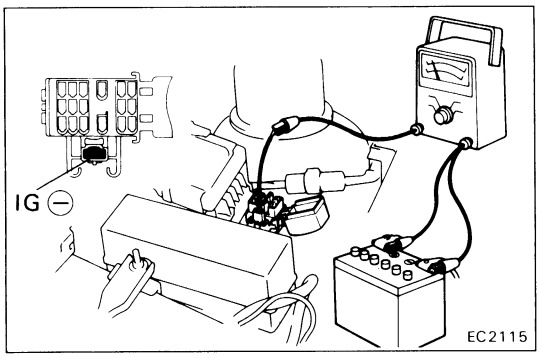

6. INSPECT IDLE SPEED (N RANGE)

Connect a tachometer test probe to the check connector terminal IG ⊖, inspect the idle speed.

Idle speed: 7M-GE 700 rpm
7M-GTE 650 rpm

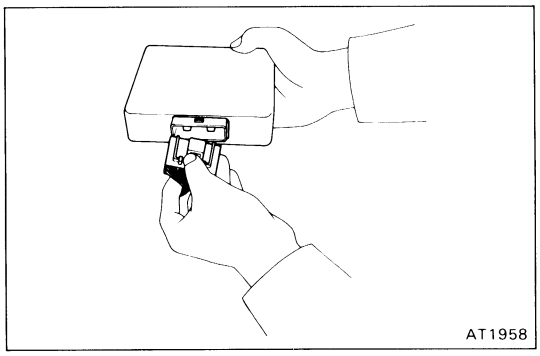

Manual Shifting Test

HINT: With this test, it can be determined whether the trouble lies within the electrical circuit or is a mechanical problem in the transmission.

1. DISCONNECT ECT ECU CONNECTOR

(a) Remove the cowl side trim of passenger side.

(b) With the engine OFF, disconnect the ECT ECU connector.

2. INSPECT MANUAL DRIVING OPERATION

Check that the shift and gear positions correspond with the table below.

Shift position	D range	2 range	L range	R range	P range
Gear position	O/D	3rd	1st	Reverse	Pawl Lock

HINT: If the L, 2 and D range gear positions are difficult to distinguish, perform the following road test.

- While driving, shift through the L, 2 and D ranges. Check that the gear change corresponds to the shift position.

If any abnormality is found in the above test, the problem lies in transmission itself.

3. CONNECT ECT ECU CONNECTOR

(a) Connect the ECT ECU connector.

(b) Install the cowl side trim of passenger side.

Electronic Control System

PRECAUTION

Do not open the cover or the case of the ECU and various computer unless absolutely necessary. (If the IC terminals are touched, the IC may be destroyed by static electricity.)

ELECTRONIC CONTROL CIRCUIT

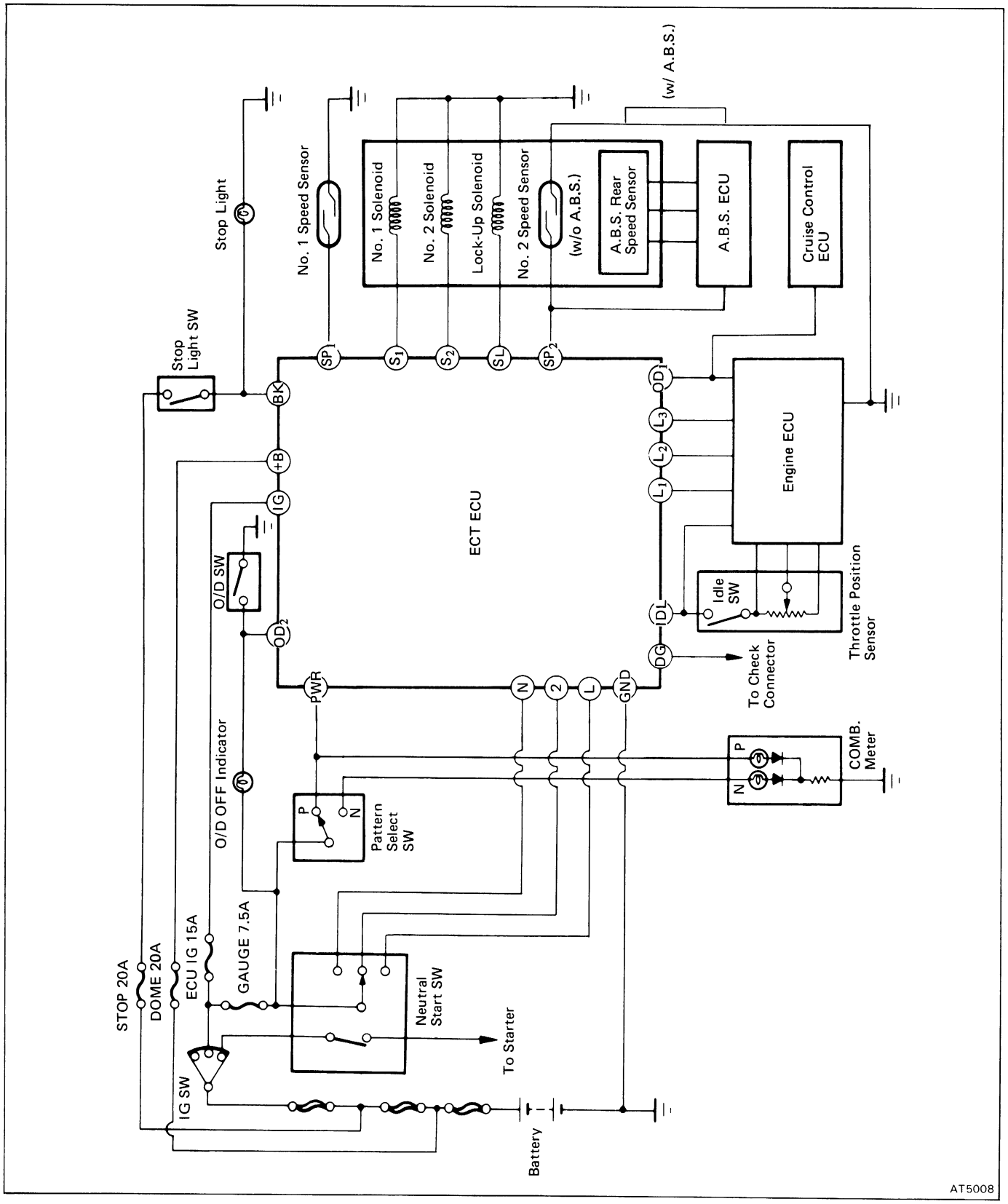

ELECTRONIC CONTROL COMPONENTS

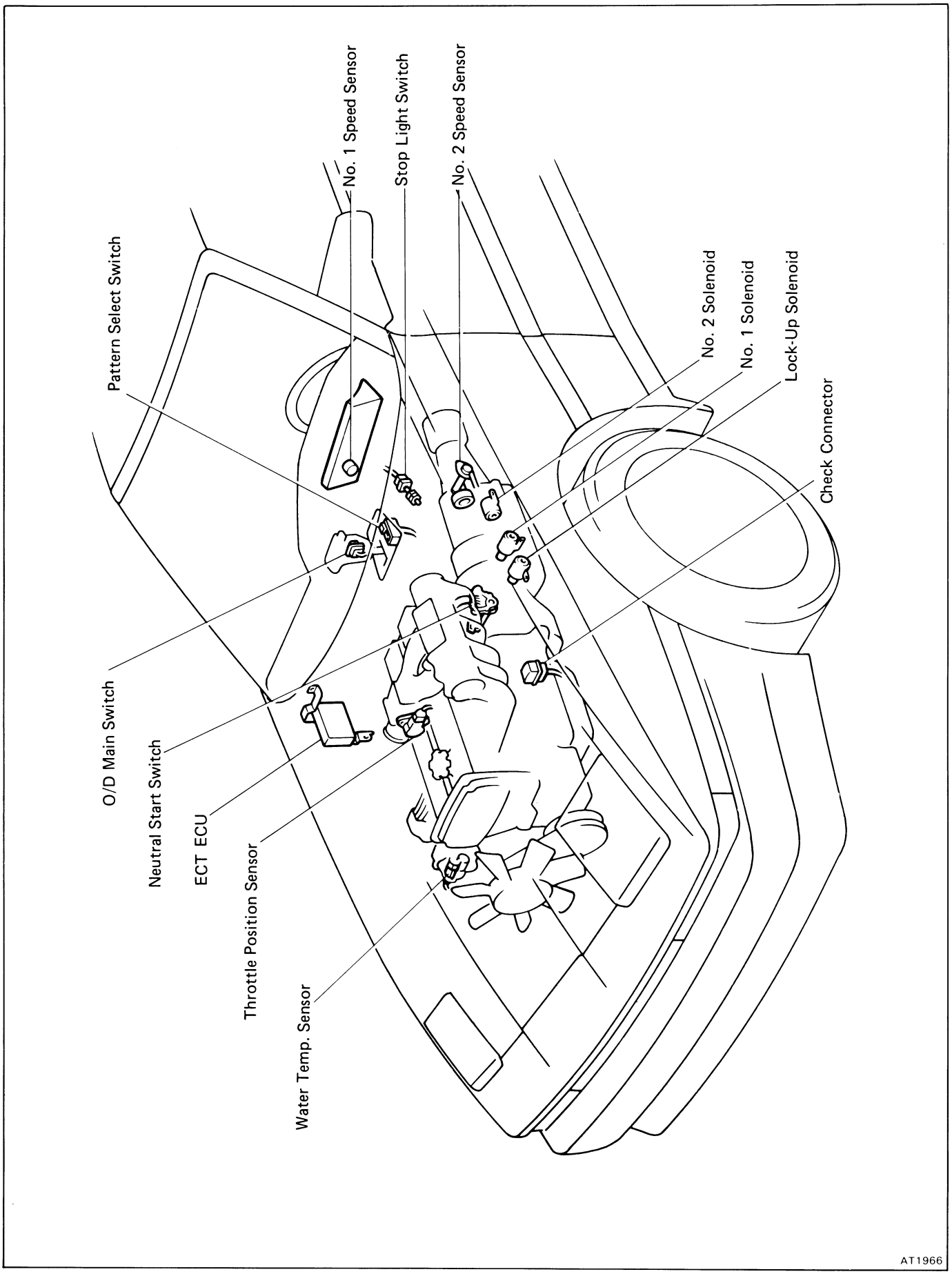

TROUBLESHOOTING FLOW-CHART

Trouble No. 1 No Shifting

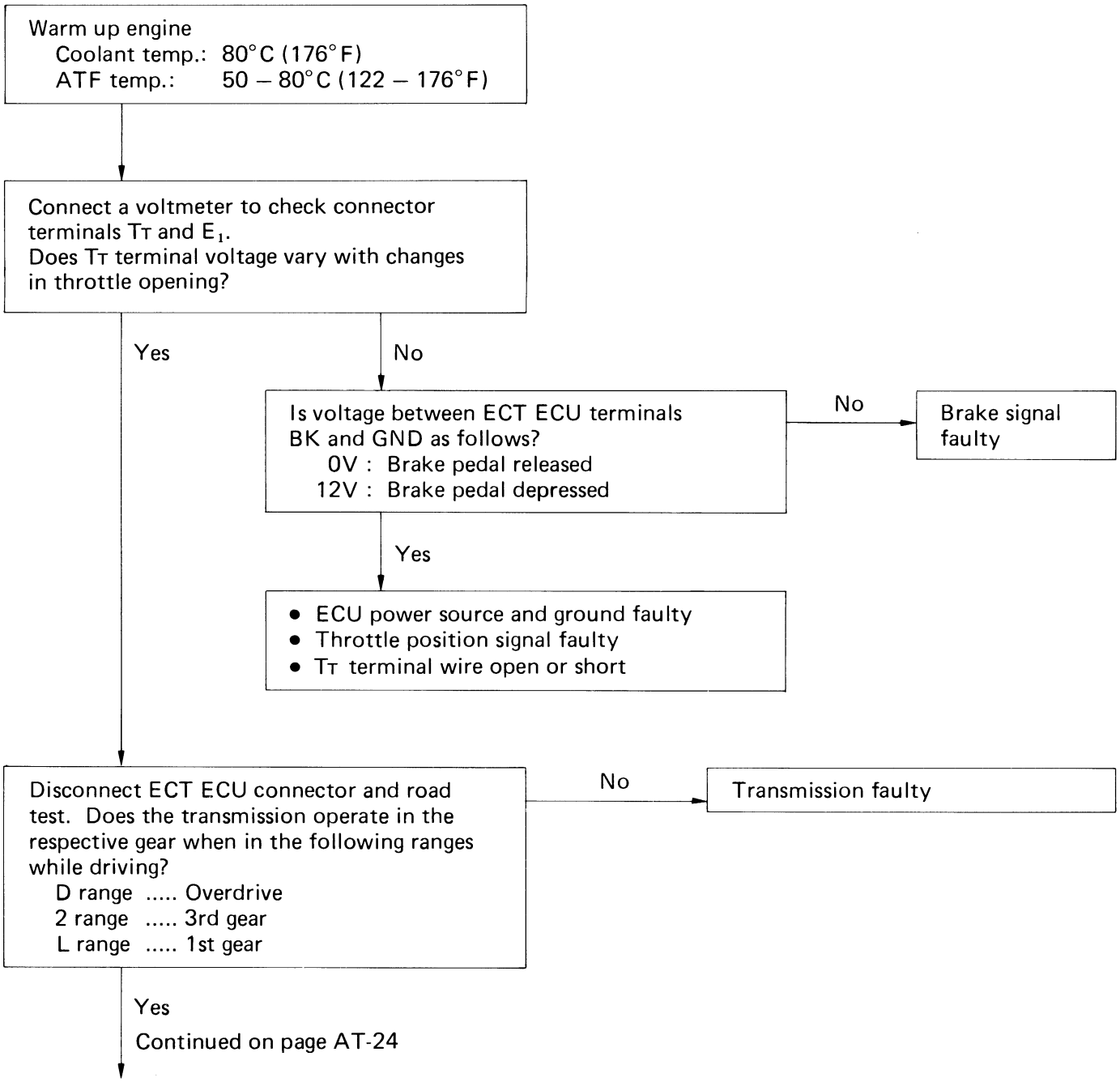

Continued on page AT-24

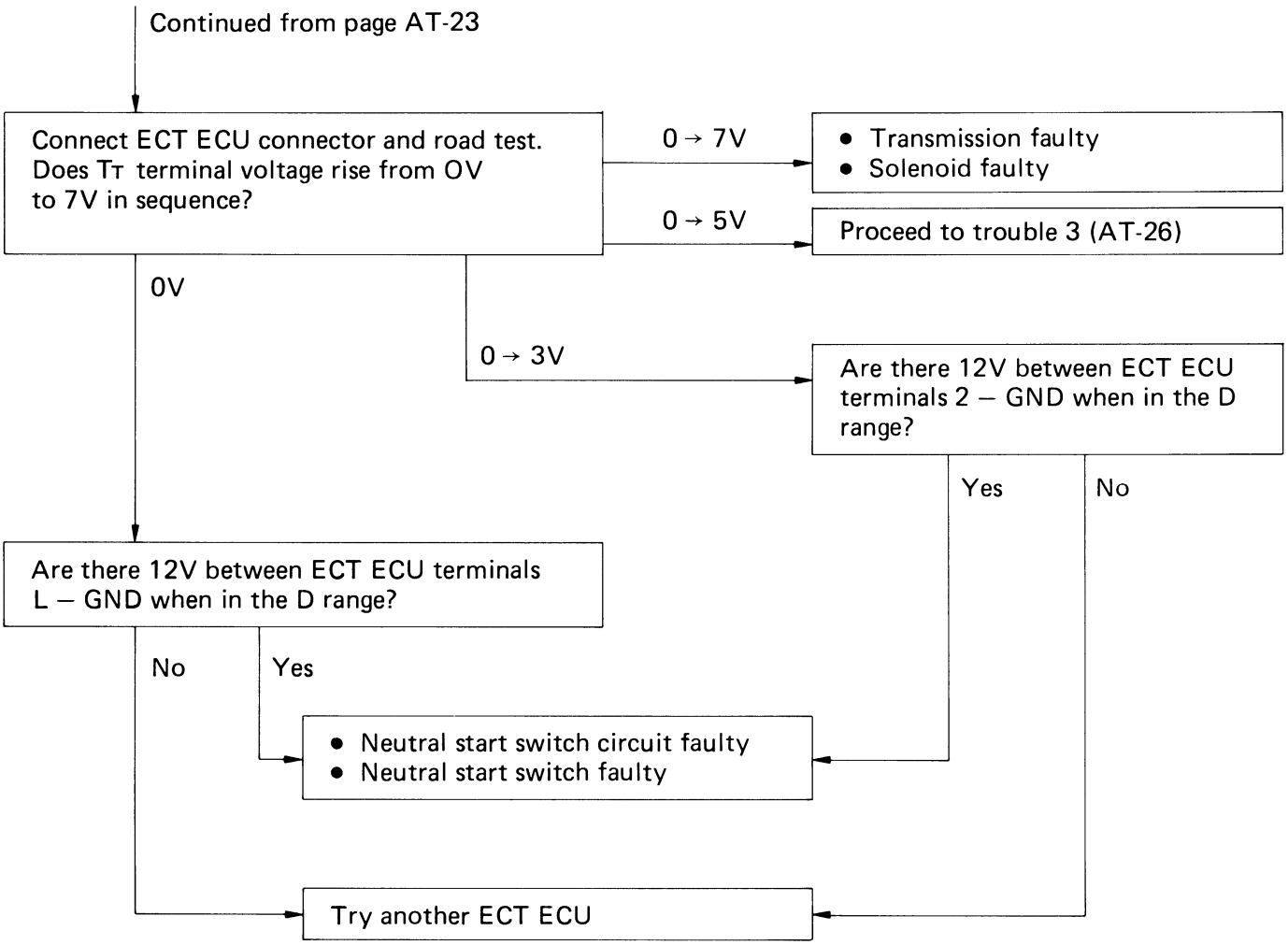
Continued from page AT-23
Connect ECT ECU connector and road test. Does TT terminal voltage rise from OV to 7V in sequence?
0 → 7V
• Transmission faulty
• Solenoid faulty
0 → 5V
Proceed to trouble 3 (AT-26)
0V
0 → 3V
Are there 12V between ECT ECU terminals 2 — GND when in the D range?
Yes
No
Are there 12V between ECT ECU terminals L — GND when in the D range?
No
Yes
• Neutral start switch circuit faulty
• Neutral start switch faulty
Try another ECT ECU

Trouble No. 2 Shift point too high or too low

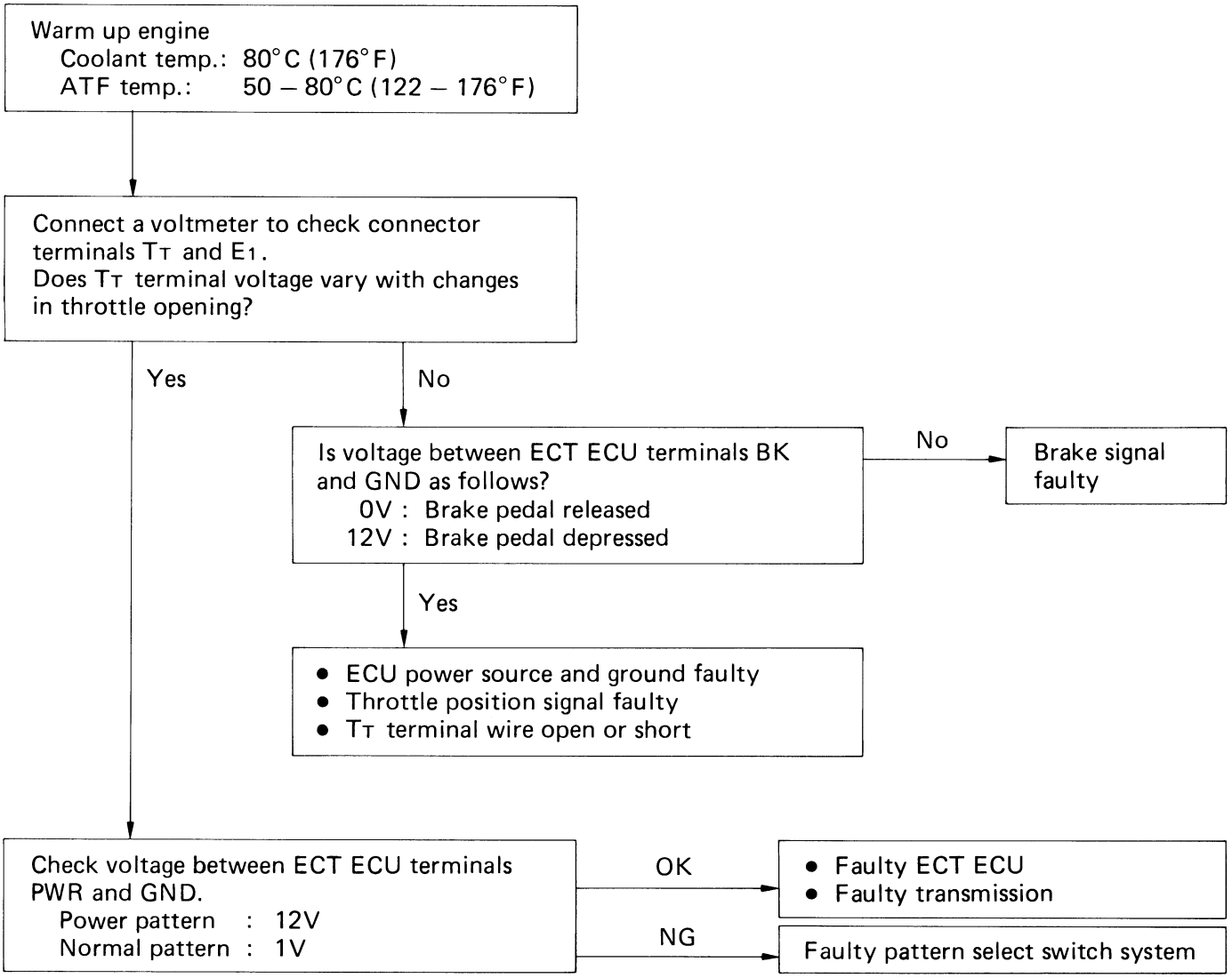

Trouble No. 3 No up-shift to overdrive (After warm-up)

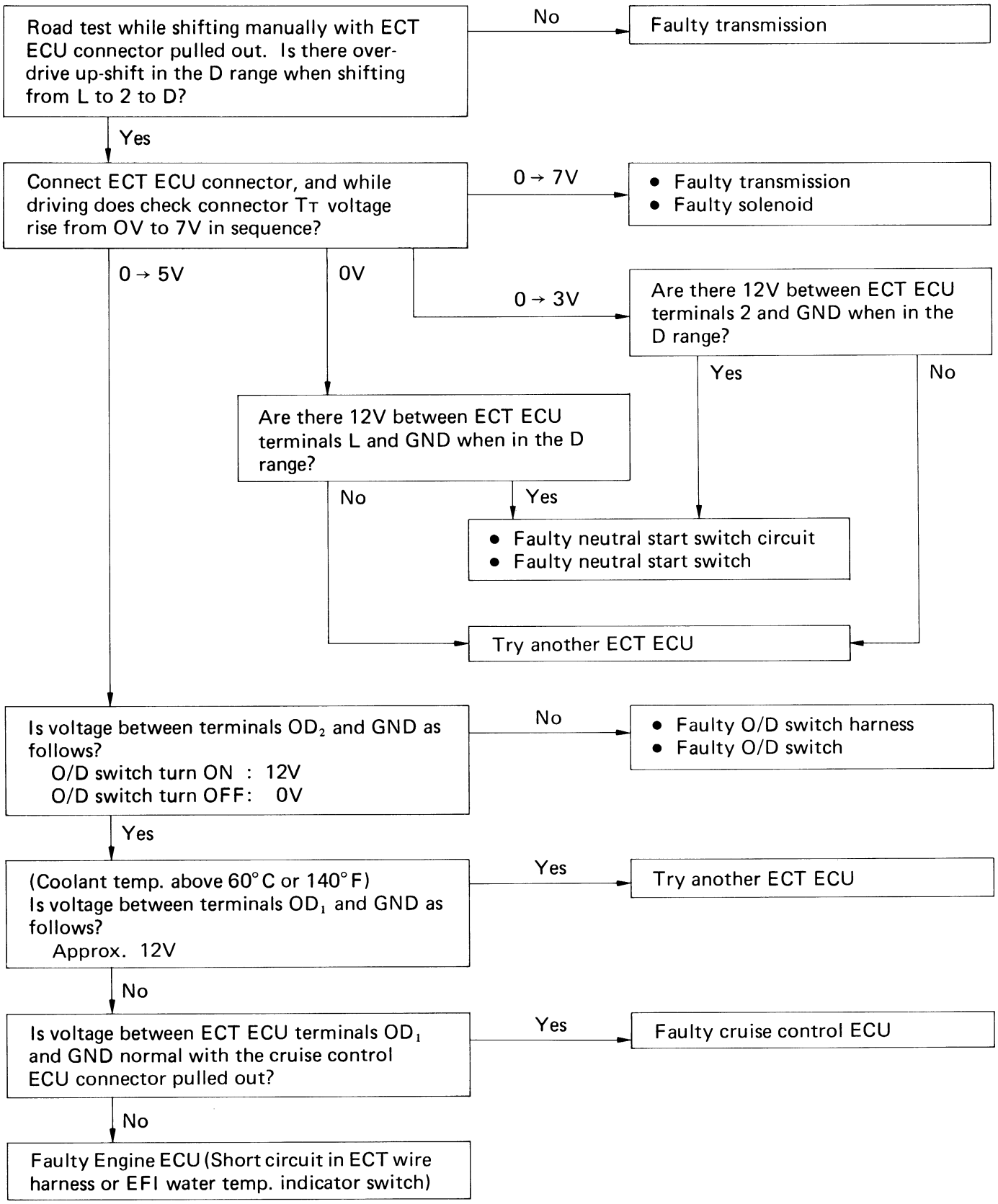

Trouble No. 4 No lock-up (After warm-up)

Warm up engine
Coolant temp.: 80°C (176°F)
ATF temp.: 50 – 80°C (122 – 176°F)

↓

Road test
Connect a voltmeter to check connector terminals T_T and E_1.
Is there 7, 5 or 3V in the lock-up range while driving?

→ Yes →
- Lock-up solenoid stuck
- Faulty transmission
- Faulty lock-up mechanism

↓ No

Is voltage between ECT ECU BK and GND terminals as follows?
Brake pedal depressed: 12V
Brake pedal released: 0V

→ No → Faulty brake signal

↓ Yes

- Faulty ECU power source and ground
- Faulty throttle position signal

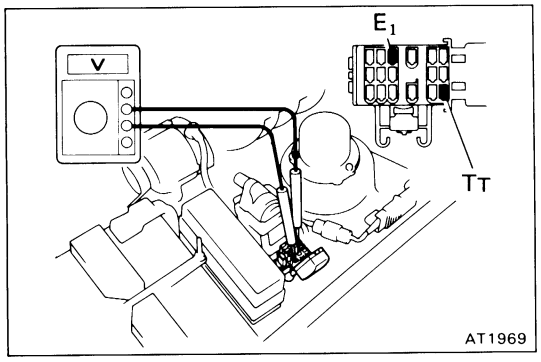

INSPECTION OF T_T TERMINAL VOLTAGE

1. INSPECT THROTTLE POSITION SENSOR SIGNAL

(a) Turn the ignition switch to ON. Do not start the engine.

(b) Connect a voltmeter to check connector terminals T_T and E_1.

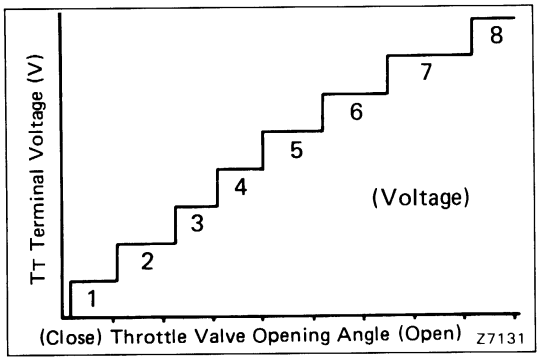

(c) While slowly depressing the accelerator pedal, check that T_T terminal voltage rises in sequence.

If the voltage does not change in proportion to the throttle opening angle, there is a malfunction in the throttle position sensor or circuit.

2. INSPECT BRAKE SIGNAL

(a) Depress the accelerator pedal until the T_T terminal indicates 8V.

(b) Depress the brake pedal and check the voltage reading from the T_T terminal.
Brake pedal depressed..... 0V
Brake pedal released..... 8V

If not as indicated, there is a malfunction in either the stop light switch or circuit.

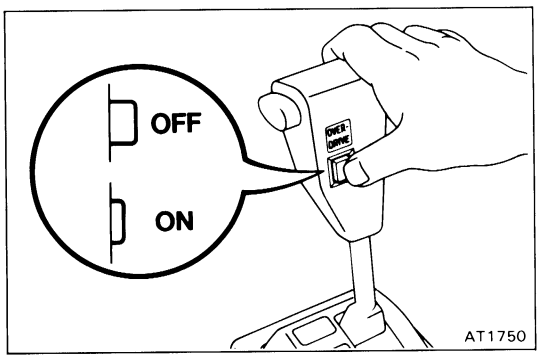

3. INSPECT EACH UP-SHIFT POSITION

(a) Warm up the engine.

Coolant temperature: 80°C (176°F)

(b) Turn the O/D switch to "ON".

(c) Place the pattern select switch in "Normal" and the shift lever into the D range.

(d) During a road test (above 10 km/h or 6 mph) check that voltage at the T_T terminal is as indicated below for each up-shift position.

If the voltage rises from 0V to 7V in the sequence shown, the control system is okay.

The chart on the left shows the voltmeter reading and corresponding gears.

T_T Terminal (V)	Gear Position
0	1st
2	2nd
3	2nd Lock-up
4	3rd
5	3rd Lock-up
6	O/D
7	O/D Lock-up

HINT: Determine the gear position by a light shock or change in engine rpm when shifting. The lock-up clutch will turn ON only infrequently during normal 2nd and 3rd gear operation. To trigger this action, press the accelerator pedal to 50% or more of its stroke. At less than 50%, the voltage may change in the sequence 2V — 4V — 6V — 7V.

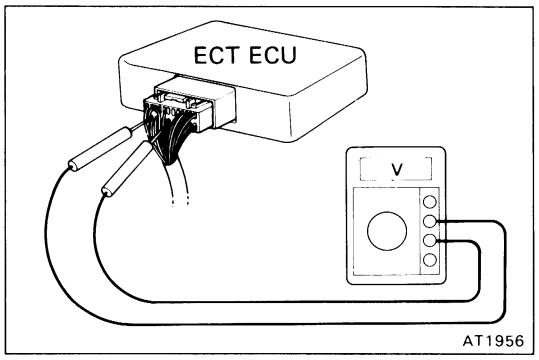

INSPECTION OF ELECTRONIC CONTROL COMPONENTS

1. INSPECT VOLTAGE OF ECT ECU CONNECTOR

(a) Remove the cowl side trim of passenger side.

(b) Turn on the ignition switch.

(c) Measure the voltage at each terminal.

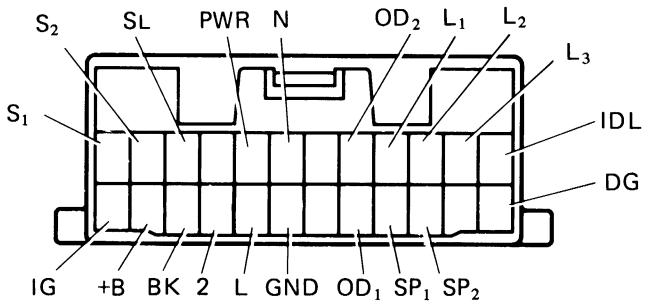

Terminal	Measuring condition		Voltage (V)
L_1 – GND	Throttle valve fully closed		12
	Throttle valve fully closed to fully open		12 to 0
	Throttle valve fully open		0
L_2 – GND	Throttle valve fully closed		12
	Throttle valve fully closed to fully open		12 to 0 to 12
	Throttle valve fully open		12
L_3 – GND	Throttle valve fully closed		12
	Throttle valve fully closed to fully open		12 to 0 to 12 to 0 to 12
	Throttle valve fully open		12
IDL – GND	Throttle valve fully closed		0
	Throttle valve opening above 1.5°		12
SP_1 – GND	Cruise control main switch OFF	Standing still	5 or 0
		Engine running, vehicle moving	2.5
BK – GND	When brake pedal is depressed		12
	When brake pedal is not depressed		0
2 – GND	"2" range		10 – 16
	Except "2" range		0 – 2
L – GND	"L" range		10 – 16
	Except "L" range		0 – 2
N – GND	"N" range		10 – 16
	Except "N" range		0 – 2

Terminal	Measuring condition	Voltage (V)
S_1 – GND	–	12
S_2, S_L – GND	–	0
OD_1 – GND	Coolant temp. below 60°C (140°F)	0
	Coolant temp. above 60°C (140°F)	12
OD_2 – GND	O/D main switch turned ON	12
	O/D main switch turned OFF	0
IG – GND	Ignition switch ON	12
SP_2 – GND	Standing still	5 or 0
	Vehicle moving	4
PWR – GND	PWR pattern	12
	NORM pattern	0 – 2
+B – GND	–	12

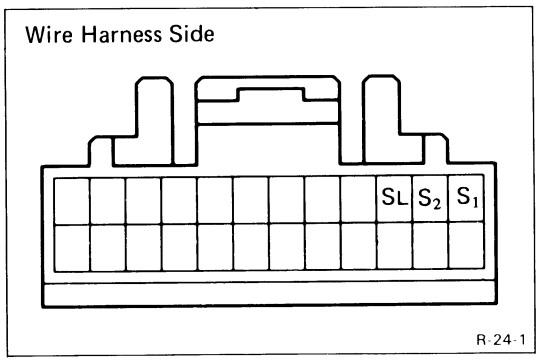

2. INSPECT SOLENOID

(a) Disconnect the connector from the ECT ECU.

(b) Measure the resistance between S_1, S_2, S_L and ground.

STD: 11 – 15 Ω

(c) Apply battery voltage to the solenoid. Check that an operation noise can be heard from the solenoid.

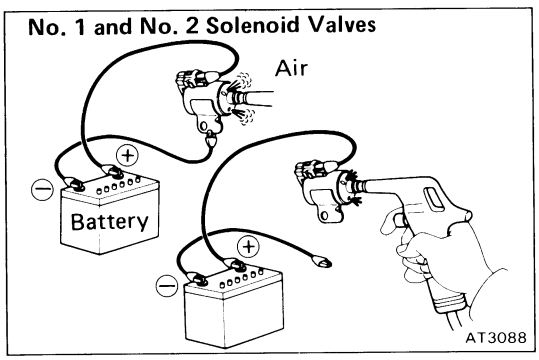

3. CHECK SOLENOID SEALS

If there is foreign material in the solenoid valve, there will be no fluid control even with solenoid operation.

(a) Check No. 1 and No. 2 solenoid valves.

- Check that the solenoid valve does not leak when low-pressure compressed air is applied.
- When supply battery voltage to the solenoid, check that the solenoid valve opens.

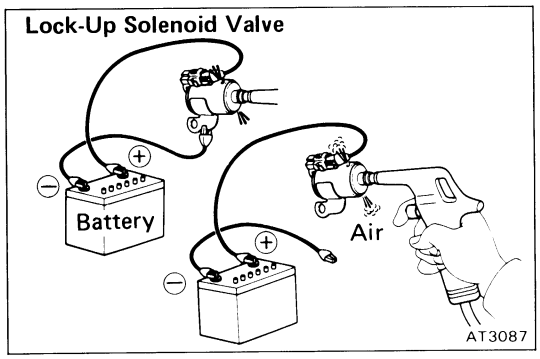

(b) Check the lock-up solenoid valve.

- Applying 5 kg/cm² (71 psi, 490 kPa) of compressed air, check that the solenoid valve opens.
- When supply battery voltage to the solenoid, check that the solenoid valve does not leak the air.

If a malfunction is found during voltage inspection (step 1.), inspect the components listed below.

4. INSPECT NEUTRAL START SWITCH
(See page AT-41)

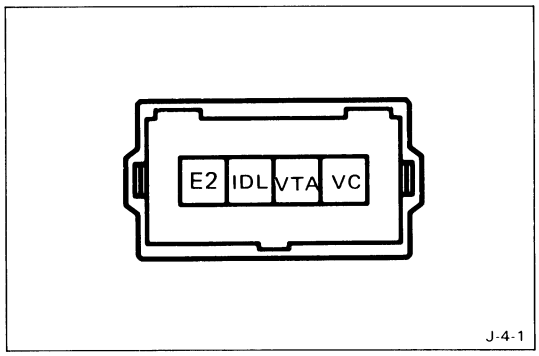

5. INSPECT THROTTLE POSITION SENSOR

Using an ohmmeter, check the resistance between each terminal.

Terminal	Throttle valve condition	Resistance (kΩ)
IDL – E_2	Fully closed	0 – 2.3
	Open	Infinity
VC – E_2	–	3 – 7
VTA – E_2	Fully closed	0.2 – 0.8
	Fully open	3 – 7

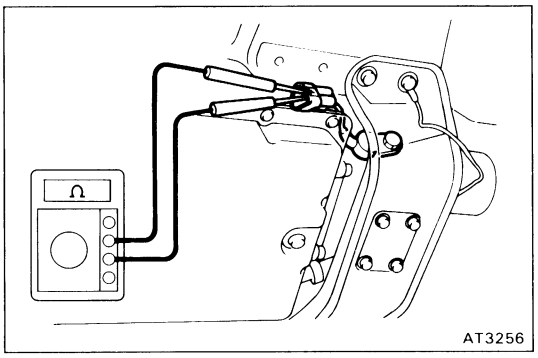

6. (w/o A.B.S.)
INSPECT NO. 2 SPEED SENSOR

(a) Jack up the rear wheel on one side.

(b) Connect an ohmmeter between the connector and ground.

(c) Spin the wheel and check that the meter needle deflects from 0 Ω to ∞ Ω.

HINT: For vehicles with A.B.S., the A.B.S. rear speed sensor is used by the ECT in stead of the No. 2 speed sensor.

See page BR-46 for the vehicle with A.B.S.

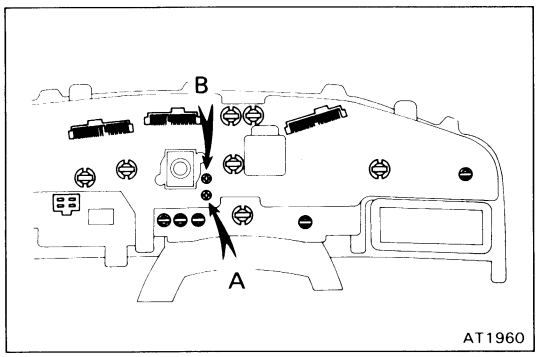

7. INSPECT NO. 1 SPEED SENSOR IN COMBINATION METER

(a) Remove the combination meter.

(b) Connect an ohmmeter between terminals A and B.

(c) Revolve the meter shaft and check that the meter needle repeatedly deflects from 0 Ω to ∞ Ω.

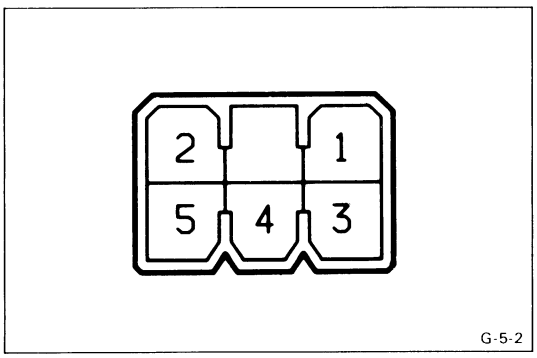

8. INSPECT PATTERN SELECT SWITCH

Inspect that there is continuity between 2 and each terminal.

HINT: As there are diodes inside, be careful of the tester probe polarity.

Pattern \ Terminal	2	3	4
PWR	○	○	
NORM	○		○

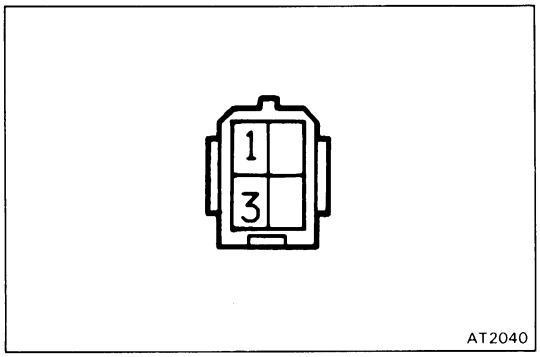

9. INSPECT O/D SWITCH

Inspect that there is continuity between terminals 1 and 3.

SW position \ Terminal	1	3
ON		
OFF	○	○

10. INSPECT WATER TEMPERATURE SENSOR (See page FI-101)

Mechanical System Tests

STALL TEST

The object of this test is to check the overall performance of the transmission and engine by measuring the stall speeds in the D and R ranges.

NOTICE:

- **Perform the test at normal operating fluid temperature (50 — 80°C or 122 — 176°F).**
- **Do not continuously run this test longer than 5 seconds.**
- **To ensure safety, conduct this test in a wide, clear, level area, which provides good traction.**
- **The stall test should always be carried out in pairs. One should observe the conditions of wheels or wheel stoppers outside the vehicle while the other is performing the test.**

MEASURE STALL SPEED

(a) Chock the four wheels.

(b) Connect a tachometer to the engine.

(c) Fully apply the parking brake.

(d) Keep your left foot pressed firmly on the brake pedal.

(e) Start the engine.

(f) Shift into the D range. Step all the way down on the accelerator pedal with your right foot. Quickly read the stall speed at this time.

NOTICE: Release the accelerator pedal and stop test if the rear wheels begin to rotate before the engine speed reaches specified stall speed.

Stall speed: 7M-GE 2,200 ± 150 rpm
7M-GTE 2,500 ± 150 rpm

(g) Perform the same test in R range.

EVALUATION

(a) Usually the rear wheels begin to rotate when the engine speed (depending on the brake force) reaches approximately 1,800 — 1,900 rpm. If so, the stall speed may be within the standard range. As a result, it can be assumed that there are no problems regarding the stall test explained in the following (b), (c), (d) and (e).

(b) If the stall speed is the same for both ranges without the rear wheels rotating but lower than specified value:
- Engine output may be insufficient
- Stator one-way clutch is not operating properly

HINT: If more than 600 rpm below the specified value, the torque converter could be faulty.

(c) If the stall speed in D range is higher than specified without the rear wheels rotating:
- Line pressure too low
- Forward clutch slipping
- No. 2 one-way clutch not operating properly
- O/D one-way clutch not operating properly

(d) If the stall speed in R range is higher than specified without the rear wheels rotating:
- Line pressure too low
- Direct clutch slipping
- First and reverse brake slipping
- O/D one-way clutch not operating properly

(e) If the stall speed in both R and D ranges are higher than specified without the rear wheels rotating:
- Line pressure too low
- Improper fluid level
- O/D one-way clutch not operating properly

STALL TEST

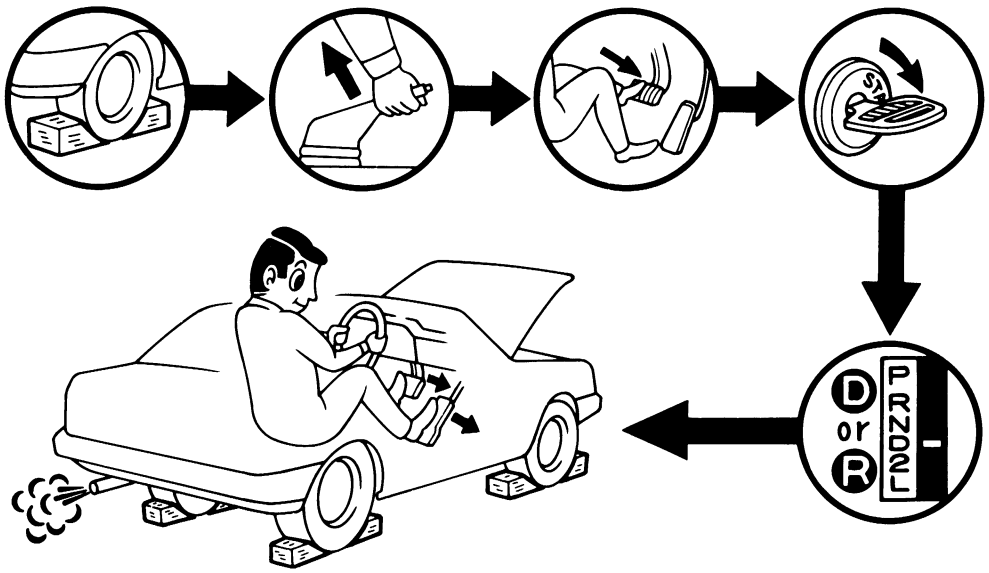

TE0047

TIME LAG TEST

When the shift lever is shifted while the engine is idling, there will be a certain time elapse or lag before the shock can be felt. This is used for checking the condition of the O/D direct clutch, forward clutch, direct clutch and first and reverse brake.

NOTICE:
- **Perform the test at normal operating fluid temperature (50 — 80°C or 122 — 176°F).**
- **Be sure to allow one minute interval between tests.**
- **Make three measurements and take the average value.**

MEASURE TIME LAG

(a) Fully apply the parking brake.

(b) Start the engine and check the idle speed.

Idle speed: 7M-GE 700 rpm
(N range) 7M-GTE 650 rpm

(c) Shift the shift lever from N to D position. Using a stop watch, measure the time it takes from shifting the lever until the shock is felt.

Time lag: Less than 1.2 seconds

(d) In same manner, measure the time lag for N → R.

Time lag: Less than 1.5 seconds

EVALUATION

(a) If N → D time lag is longer than specified:
- Line pressure too low
- Forward clutch worn
- O/D one-way clutch not operating properly

(b) If N → R time lag is longer than specified:
- Line pressure too low
- Direct clutch worn
- First and reverse brake worn
- O/D one-way clutch not operating properly

TIME LAG TEST

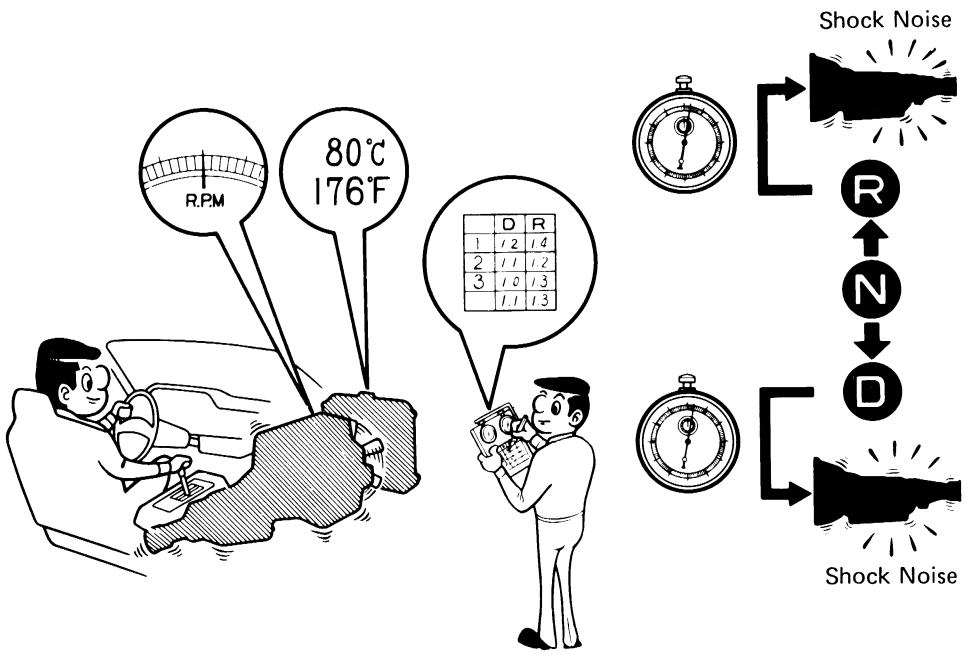

TE0009

HYDRAULIC TEST

PREPARATION

(a) Warm up the transmission fluid.

(b) Remove the transmission case test plug and connect the hydraulic pressure gauge.

SST 09992-00094 (Oil pressure gauge)

NOTICE:
- **Perform the test at normal operating fluid temperature (50 — 80°C or 122 — 176°F).**
- **The line pressure test should always be carried out in pairs. One should observe the conditions of wheels or wheel stoppers outside the vehicle while the other is performing the test.**

MEASURE LINE PRESSURE

(a) Fully apply the parking brake and chock the four wheels.

(b) Start the engine and check idling rpm.

(c) Keep your left foot pressed firmly on the brake pedal and shift into D range.

(d) Measure the line pressure when the engine is idling.

(e) Press the accelerator pedal all the way down. Quickly read the highest line pressure when engine speed reaches approximately 1,700 rpm.

NOTICE: Release the accelerator pedal and stop test if the rear wheels begin to rotate. Usually the rear wheels begin to rotate when the engine speed (depending on the brake force) reaches approximately 1,800 — 1,900 rpm.

(f) In the same manner, perform the test in R range.

kg/cm² (psi, kPa)

Engine	D range		R range	
	Idling	Stall	Idling	Stall
7M-GE	3.5 – 4.3 (50 – 61, 343 – 422)	8.8 – 11.5 (125 – 164, 863 – 1,128)	4.9 – 6.1 (70 – 87, 481 – 598)	12.2 – 15.9 (174 – 226, 1,196 – 1,559)
7M-GTE	4.1 – 4.9 (58 – 70, 402 – 481)	12.3 – 15.0 (175 – 213, 1,206 – 1,471)	5.0 – 6.2 (71 – 88, 490 – 608)	15.1 – 18.8 (215 – 267, 1,481 – 1,844)

If the measured pressures are not up to specified values, recheck the throttle cable adjustment and perform a retest.

EVALUATION

(a) If the measured values at all ranges are higher than specified:
- Throttle cable out of adjustment
- Throttle valve defective
- Regulator valve defective

(b) If the measured values at all ranges are lower than specified:
- Throttle cable out of adjustment
- Throttle valve defective
- Regulator valve defective
- Oil pump defective
- O/D direct clutch defective

(c) If pressure is low in the D range only:
- D range circuit fluid leakage
- Forward clutch defective

(d) If pressure is low in the R range only:
- R range circuit fluid leakage
- Direct clutch defective
- First and reverse brake defective

HYDRAULIC TEST

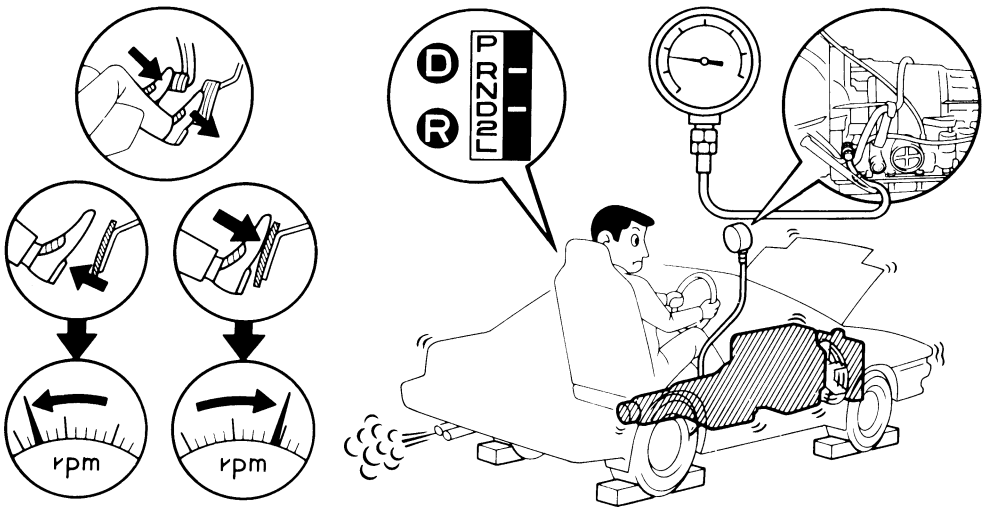

AT1961

ROAD TEST

NOTICE: Perform the test at normal operating fluid temperature (50 — 80°C or 122 — 176°F).

1. D RANGE TEST IN NORM AND PWR PATTERN RANGES

Shift into the D range and hold the accelerator pedal constant at the full throttle valve opening position.

Check the following:

(a) 1-2, 2-3 and 3-O/D up-shifts should take place, and shift points should conform to those shown in the automatic shift schedule.

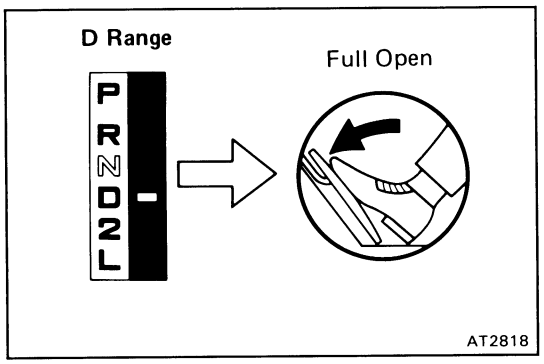

Conduct a test under both Normal and Power patterns.

HINT:
- There is no O/D up-shift or lock-up when the coolant temp. is below 60°C (140°F) and speed is under 60 km/h (37 mph), or if there is a 10 km/h (6 mph) difference between the set cruise control speed.
- There is no 3rd up-shift or lock-up when coolant temp. is below 35°C (95°F) and speed is under 40 km/h (25 mph).

EVALUATION

(1) If there is no 1 → 2 up-shift:
- No. 2 solenoid is stuck
- 1-2 shift valve is stuck

(2) If there is no 2 → 3 up-shift:
- No. 1 solenoid is stuck
- 2-3 shift valve is stuck

(3) If there is no 3 → O/D up-shift:
- 3-4 shift valve is stuck

(4) If the shift point is defective:
- Throttle valve, 1-2 shift valve, 2-3 shift valve, 3-4 shift valve etc., are defective

(5) If the lock-up is defective:
- Lock-up solenoid is stuck
- Lock-up relay valve is stuck

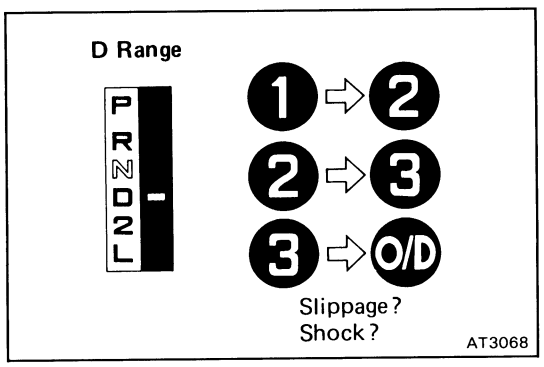

(b) In the same manner, check the shock and slip at the 1 → 2, 2 → 3, and 3 → O/D up-shifts.

EVALUATION

If the shock is excessive:
- Line pressure is too high
- Accumulator is defective
- Check ball is defective

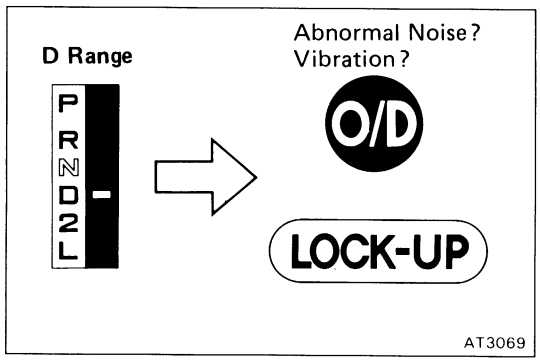

(c) Run at the D range lock-up or O/D gear and check for abnormal noise and vibration.

HINT: The check for the cause of abnormal noise and vibration must be made with extreme care as it could also be due to loss of balance in the propeller shaft, differential, torque converter, etc.

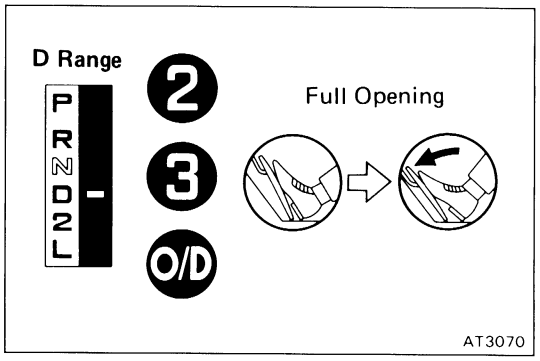

(d) While running in the D range, 2nd, 3rd and O/D gears, check to see that the possible kick-down vehicle speed limits for 2 → 1, 3 → 2 and O/D → 3 kick-downs conform to those indicated on the automatic shift schedule.

(e) Check for abnormal shock and slip at kick-down.

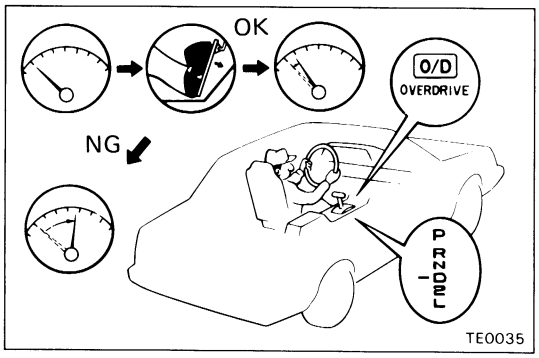

(f) Check for the lock-up mechanism.
  (1) Drive in D range, O/D gear, at a steady speed (lock-up ON) of about 75 km/h (47 mph).
  (2) Lightly depress the accelerator pedal and check that the engine rpm does not change abruptly.

If there is a big jump in engine rpm, there is no lock-up.

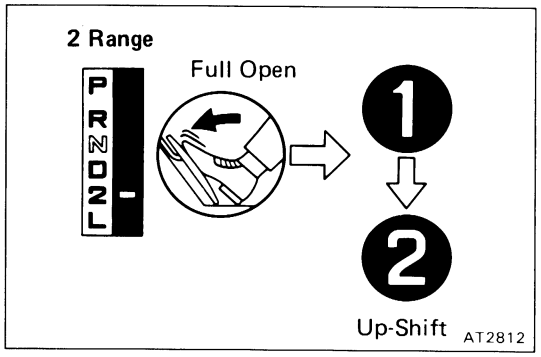

2. 2 RANGE TEST

Shift into the 2 range and, while driving with the accelerator pedal held constantly at the full throttle valve opening position, push in one of the pattern selectors and check on the following points.

(a) Check to see that the 1 → 2 up-shift takes place and that the shift point conforms to it shown on the automatic shift schedule.

HINT:
- There is no O/D up-shift and lock-up in the 2 range.
- To prevent overrun, the transmission up-shifts into 3rd gear at around 110 km/h (68 mph) [7M-GE] or 114 km/h (71 mph) [7M-GTE].

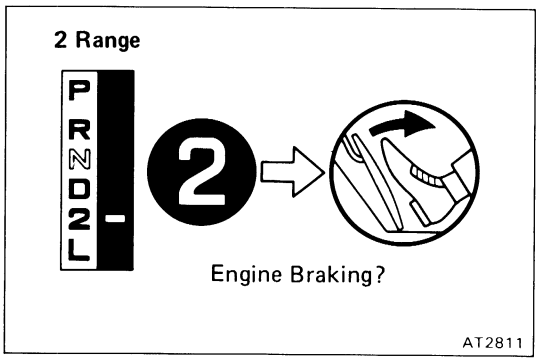

(b) While running in the 2 range and 2nd gear, release the accelerator pedal and check the engine braking effect.

EVALUATION

If there is no engine braking effect:
- Second coast brake is defective

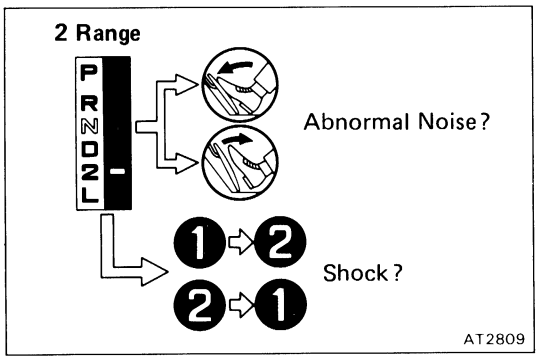

(c) Check for abnormal noise at acceleration and deceleration, and for shock at up-shift and down-shift.

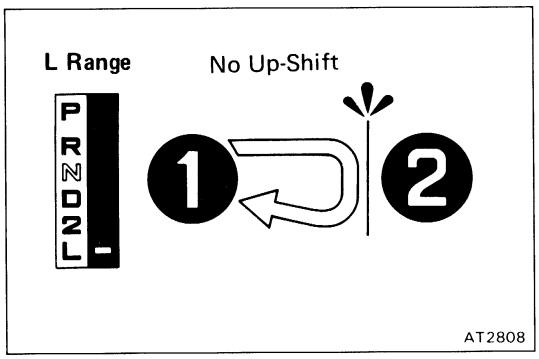

3. L RANGE TEST

(a) While running in the L range, check to see that there is no up-shift to 2nd gear.

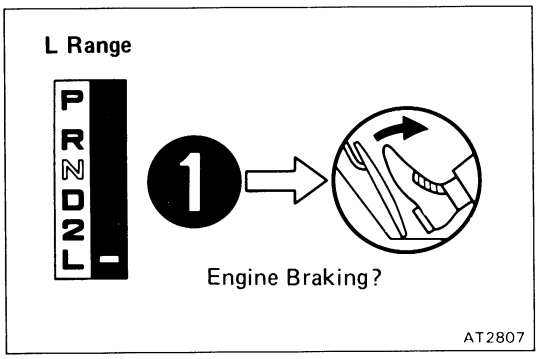

(b) While running in the L range, release the accelerator pedal and check the engine braking effect.

EVALUATION

If there is no engine braking effect:
- First and reverse brake is defective

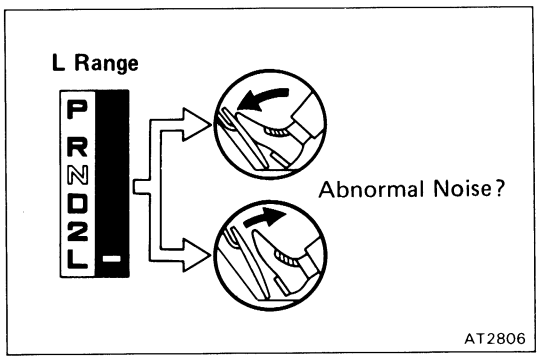

(c) Check for abnormal noise during acceleration and deceleration.

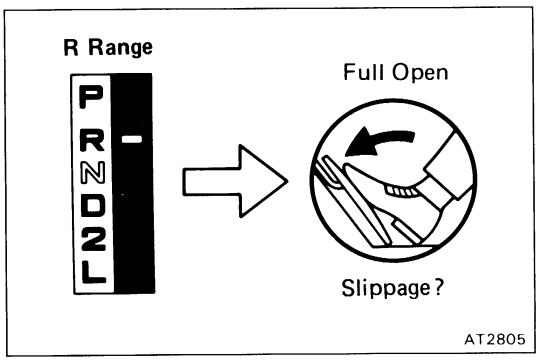

4. R RANGE TEST

Shift into the R range and, while starting at full throttle, check for slipping.

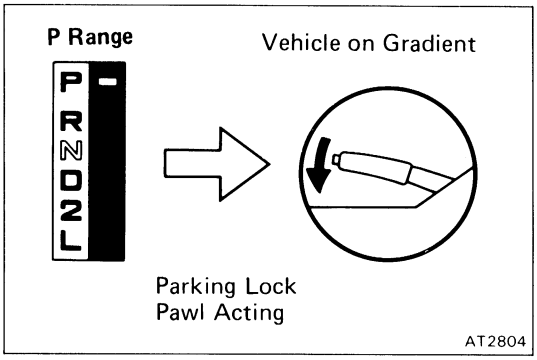

5. P RANGE TEST

Stop the vehicle on a gradient (more than 5°) and after shifting into the P range, release the parking brake.

Then check to see that the parking lock pawl holds the vehicle in place.

Automatic Shift Schedule

(7M-GE)

		Throttle valve fully open [ ] Fully closed km/h (mph)							
		1 → 2	2 → 3	3 → O/D	[3 → O/D]	[O/D → 3]	O/D → 3	3 → 2	2 → 1
D range	NORM	44–48 (27–30)	92–99 (57–62)	146–155 (91–96)	[34–38 (21–24)]	[25–29 (16–18)]	141–150 (88–93)	85–93 (53–58)	39–43 (24–27)
	PWR	47–51 (29–32)	101–107 (63–66)	161–168 (100–104)	[41–45 (25–28)]	[25–29 (16–18)]	155–168 (96–101)	94–100 (58–62)	42–46 (26–29)
2 range	NORM PWR	44–48 (27–30)	106–114 (66–71)	–	–	–	–	93–101 (58–63)	39–43 (24–27)
L range	NORM PWR	–	–	–	–	–	–	–	46–50 (29–31)

		Throttle valve opening 5% km/h (mph)					
		Lock-up ON			Lock-up OFF		
		2nd	*3rd	O/D	2nd	*3rd	O/D
D range	NORM	–	73–78 (45–48)	58–62 (36–39)	–	68–72 (42–45)	55–58 (34–36)
	PWR	–	73–78 (45–48)	63–66 (39 – 41)	–	68–72 (42 – 45)	57–61 (35–38)

* : O/D switch OFF

(7M-GTE)

		Throttle valve fully open [ ] Fully closed km/h (mph)							
		1 → 2	2 → 3	3 → O/D	[3 → O/D]	[O/D → 3]	O/D → 3	3 → 2	2 → 1
D range	NORM	40–44 (25–27)	94–99 (58–62)	149–159 (93–99)	[38–41 (24–25)]	[28–32 (17–20)]	143–153 (89–95)	86–94 (53–58)	34–39 (21–24)
	PWR	47–51 (30–32)	102–111 (63–69)	173–183 (108–114)	[45–50 (28–31)]	[28–32 (17–20)]	166–177 (103–110)	95–103 (59–64)	41–45 (25–28)
2 range	NORM PWR	40–44 (25–27)	110–118 (68–73)	–	–	–	–	102–111 (63–69)	34–39 (21–24)
L range	NORM PWR	–	–	–	–	–	–	–	51–56 (32–35)

		Throttle valve opening 5% km/h (mph)					
		Lock-up ON			Lock-up OFF		
		2nd	*3rd	O/D	2nd	*3rd	O/D
D range	NORM	–	80–85 (50–53)	60–65 (37–40)	–	74–79 (46–49)	57–62 (35–39)
	PWR	–	80–85 (50–53)	69–73 (43–45)	–	74–79 (46–49)	63–67 (39–42)

* : O/D switch OFF

HINT:
(1) Lock-up will not occur in 2nd gear unless the throttle valve opening is greater than 35%.
(2) There is no lock-up in the 2 and L ranges.
(3) In the following cases, the lock-up will be released regardless of the lock-up pattern.
- When the throttle is completely closed.
- When the brake light switch is ON.

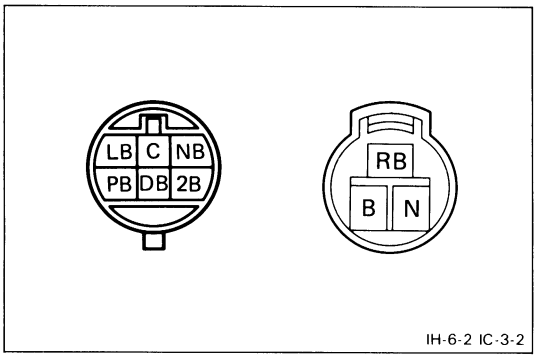

Neutral Start Switch

INSPECTION OF NEUTRAL START SWITCH

Inspect that there is continuity between each terminals.

O—O : Continuity

Shift Position \ Terminal	B	N	PB	RB	NB	DB	2B	LB	C
P	O	O	O						O
R				O					O
N	O	O			O				O
D						O			O
2							O		O
L								O	O

ON-VEHICLE REPAIR

HINT: The components mentioned below can be replaced on the vehicle as they are without any necessity for removal of the transmission. For the respective operating procedures refer to the following pages:

Components	Removal	Installation	Remarks
Valve Body, Solenoid Valve	Steps 11 to 16 on pages AT-51 to 52	Steps 30 to 37 on pages AT-135 to 138	
Parking Lock Pawl	Step 32 on page AT-60	Step 8 on page AT-125	Remove the parking lock pawl after removing the valve body.
Extension Housing	AT-43 and Step 8 on page AT-50	AT-43 and Step 40 on page AT-139	For replacement of the oil seal, see page AT-118
Speedometer Driven Gear Oil Seal	See below	See below	

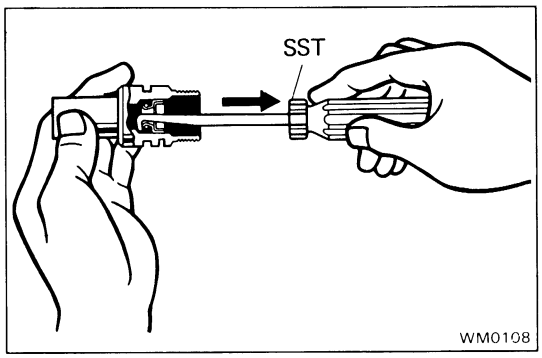

REPLACEMENT OF SPEEDOMETER DRIVEN GEAR OIL SEAL

REMOVE SPEEDOMETER DRIVEN GEAR OIL SEAL

Using SST, remove the oil seal.

SST 09921-00010

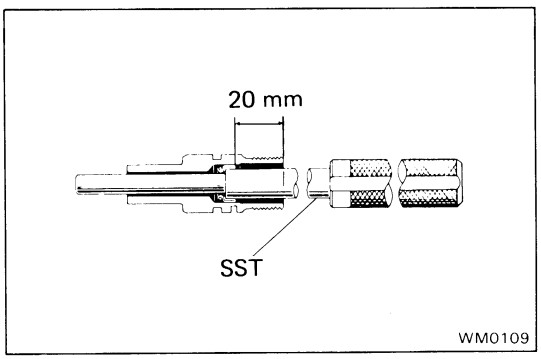

INSTALL SPEEDOMETER DRIVEN GEAR OIL SEAL

Using SST, install a new oil seal.

SST 09201-60011

Drive in depth: 20 mm (0.79 in.)

REMOVAL AND INSTALLATION OF TRANSMISSION

Remove and install the parts as shown.

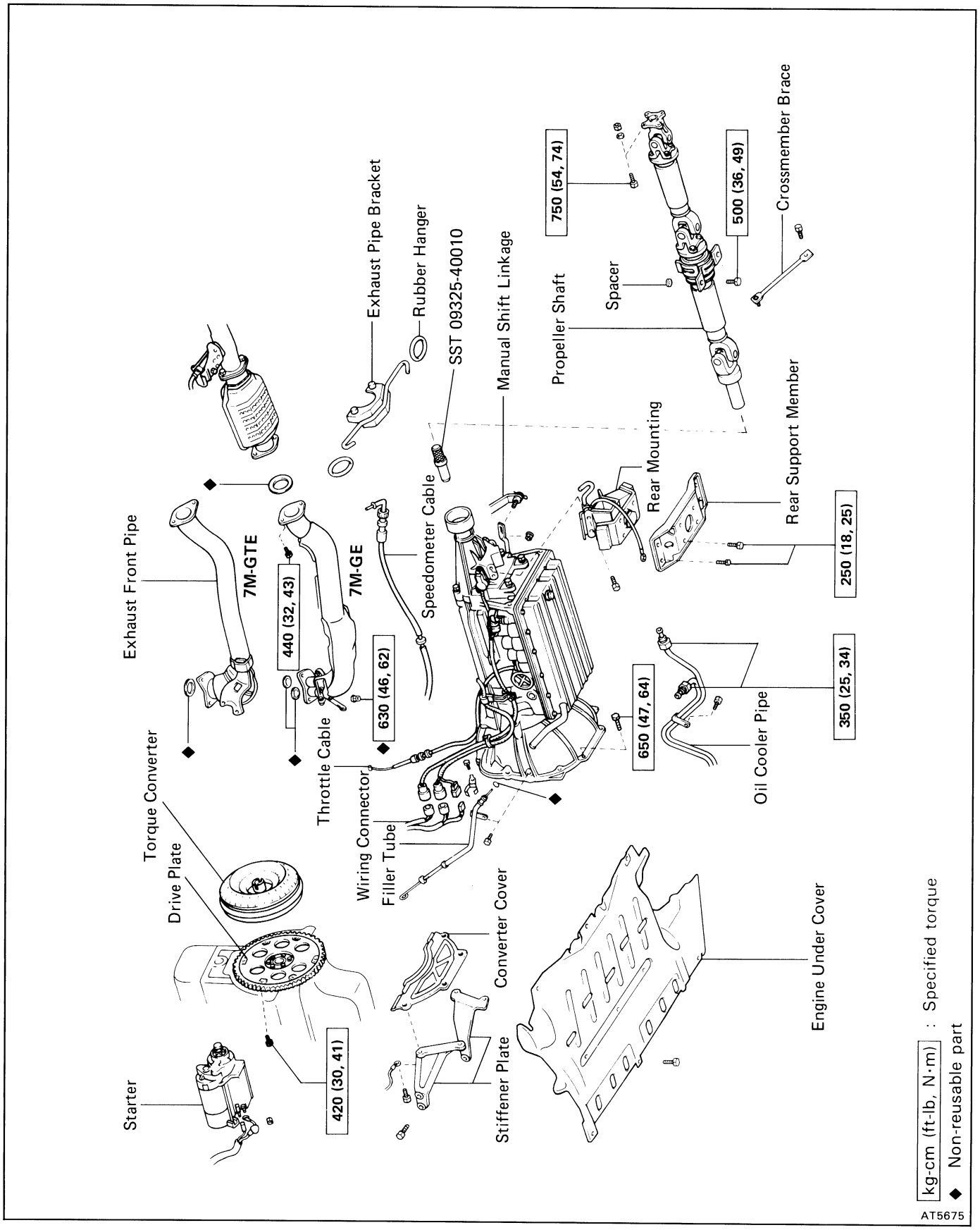

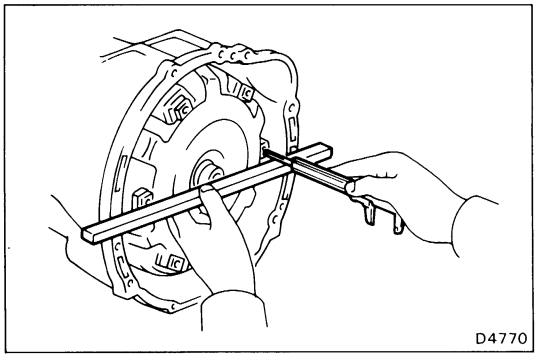

(MAIN POINT OF INSTALLATION)

1. **CHECK TORQUE CONVERTER INSTALLATION**

   Using calipers and a straight edge, measure from the installed surface of the torque converter to the front surface of the transmission housing.

   Correct distance: 26.4 mm (1.039 in.)

   If the distance is less than the standard, check for an improper installation.

2. **ADJUST TRANSMISSION THROTTLE CABLE**
   (See page AT-19)

3. **FILL TRANSMISSION WITH ATF AND CHECK FLUID LEVEL**

   Fluid type: ATF DEXRON® II

   NOTICE: Do not overfill.

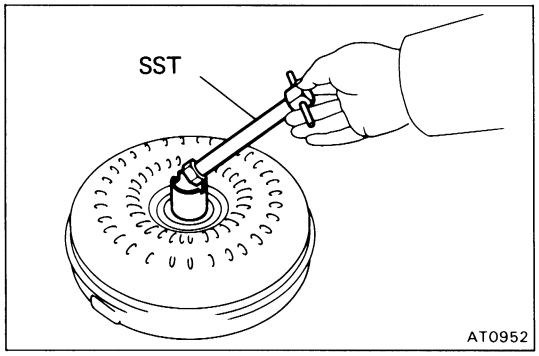

TORQUE CONVERTER AND DRIVE PLATE

INSPECTION OF TORQUE CONVERTER AND DRIVE PLATE

1. INSPECT ONE-WAY CLUTCH

(a) Insert SST into the inner race of the one-way clutch.

SST 09350-30020 (09351-32010)

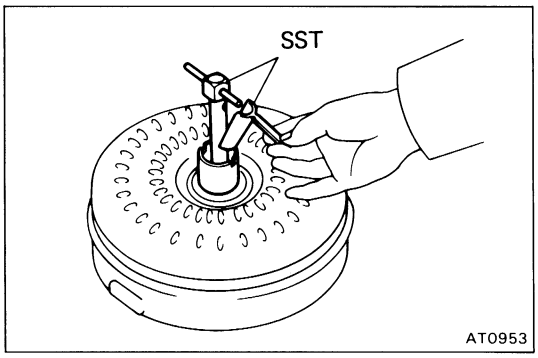

(b) Insert SST so that it fits in the notch of the converter hub and outer race of the one-way clutch.

SST 09350-30020 (09351-32020)

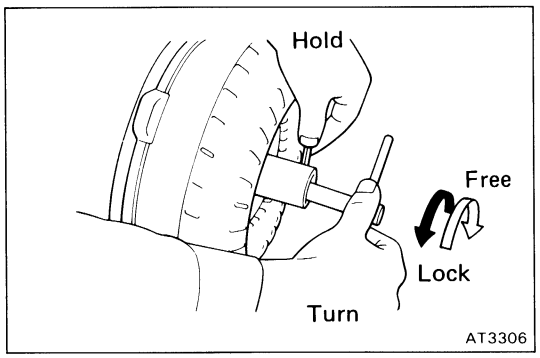

(c) With the torque converter standing on its side, the clutch locks when turned counterclockwise, and rotates freely and smoothly clockwise.

If necessary, clean the converter and retest the clutch. Replace the converter if the clutch still fails the test.

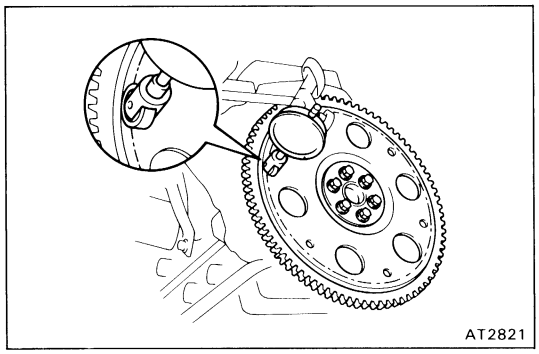

2. MEASURE DRIVE PLATE RUNOUT AND INSPECT RING GEAR

Set up a dial indicator and measure the drive plate runout.

If runout exceeds 0.20 mm (0.0079 in.) or if the ring gear is damaged, replace the drive plate. If installing a new drive plate, note the orientation of spacers and tighten the bolts.

Torque: 750 kg-cm (54 ft-lb, 74 N·m)

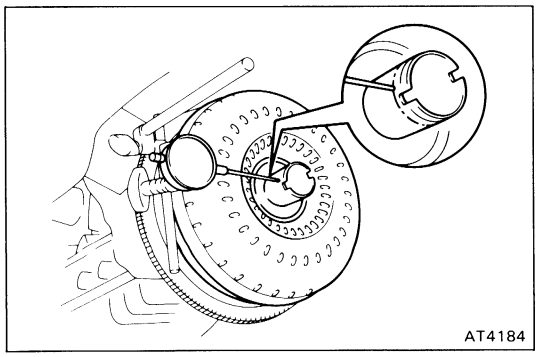

3. MEASURE TORQUE CONVERTER SLEEVE RUNOUT

(a) Temporarily mount the torque converter to the drive plate. Set up a dial indicator.

If runout exceeds 0.30 mm (0.0118 in.), try to correct by reorienting the installation of the converter. If excessive runout cannot be corrected, replace the torque converter.

HINT: Mark the position of the converter to ensure correct installation.

(b) Remove the torque converter.

REMOVAL OF COMPONENT PARTS

COMPONENTS

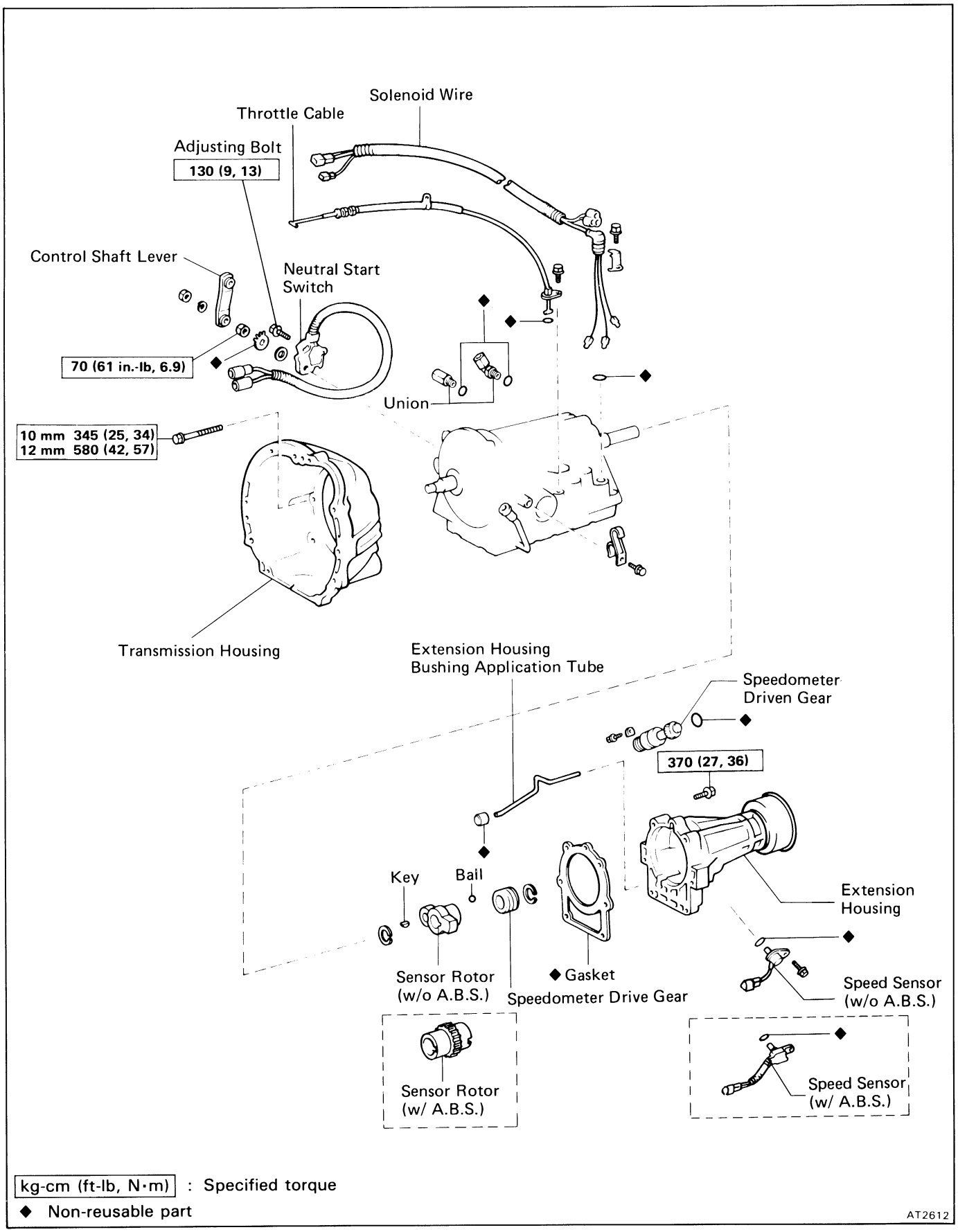

kg-cm (ft-lb, N·m) : Specified torque

◆ Non-reusable part

AT2612

COMPONENTS (Cont'd)

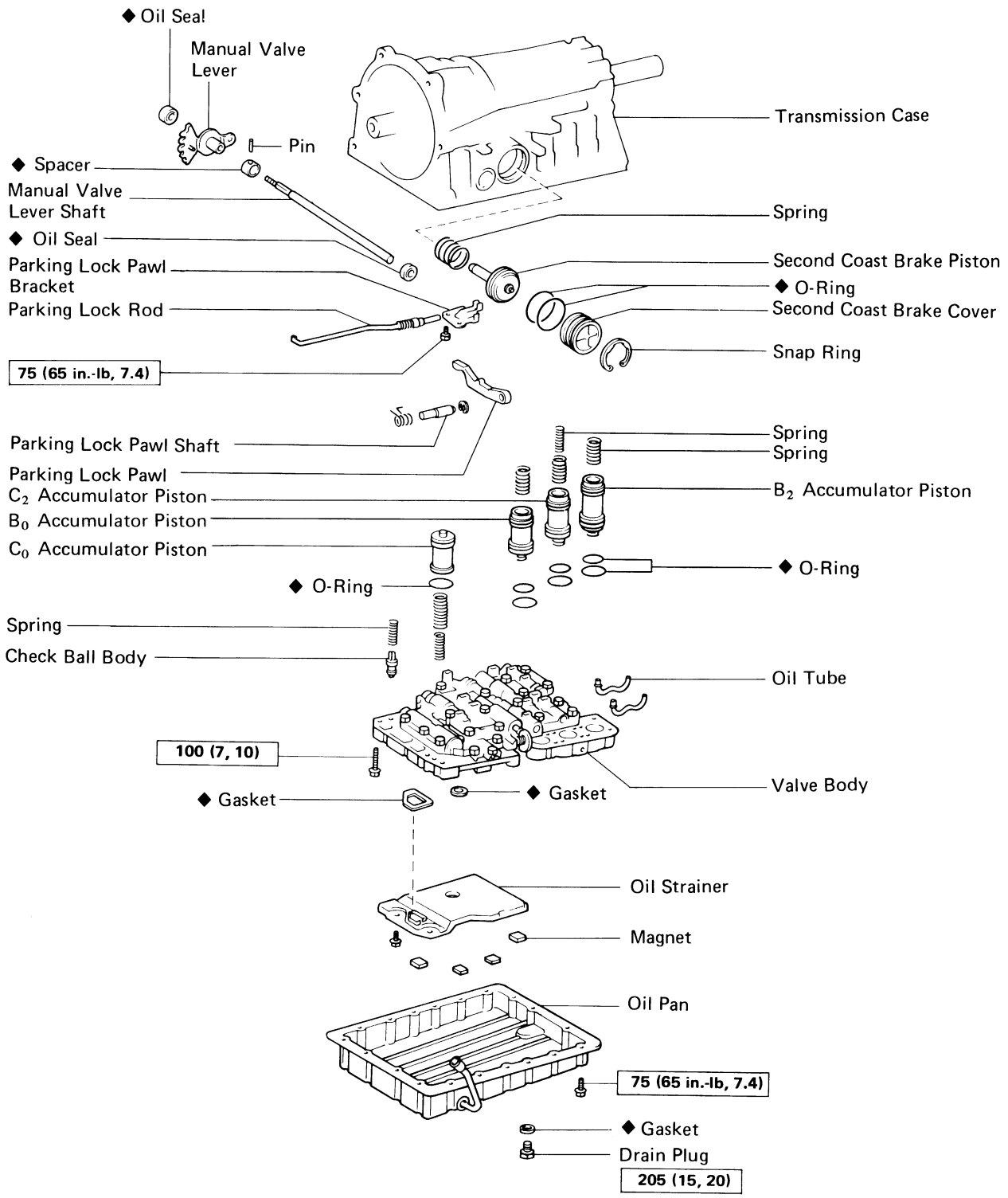

kg-cm (ft-lb, N·m) : Specified torque

◆ Non-reusable part

AT5014

COMPONENTS (Cont'd)

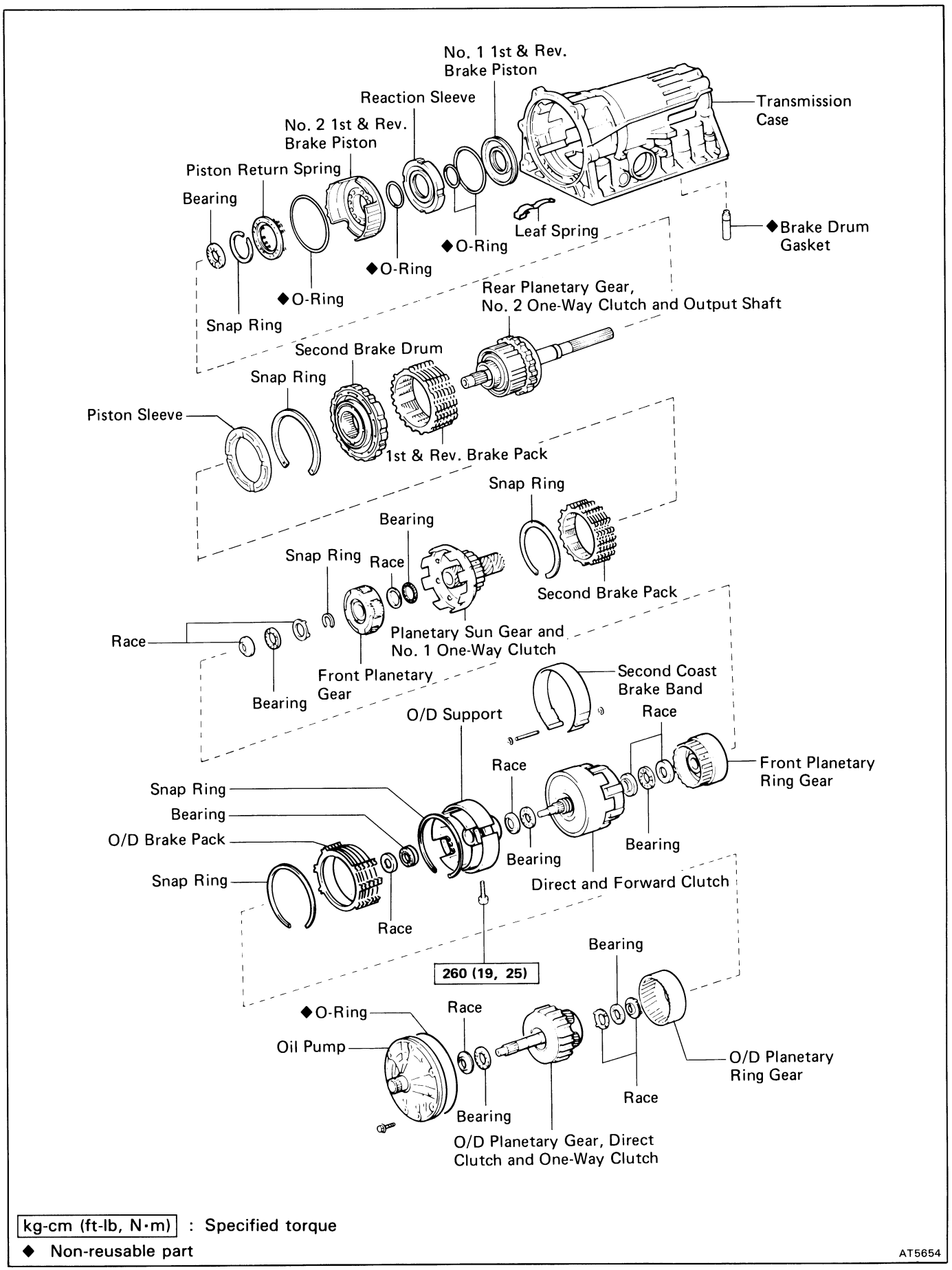

kg-cm (ft-lb, N·m) : Specified torque

◆ Non-reusable part

AT5654

SEPARATE BASIC SUBASSEMBLY

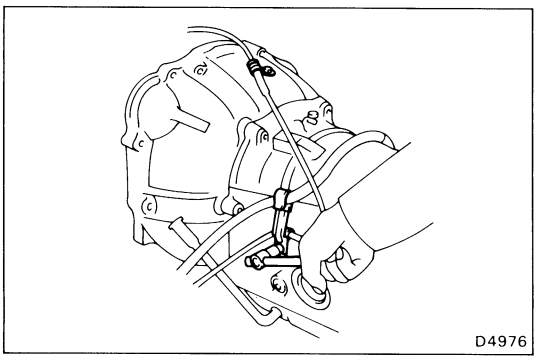
D4976

1. REMOVE WIRE HARNESS CLAMP AND THROTTLE CABLE CLAMP

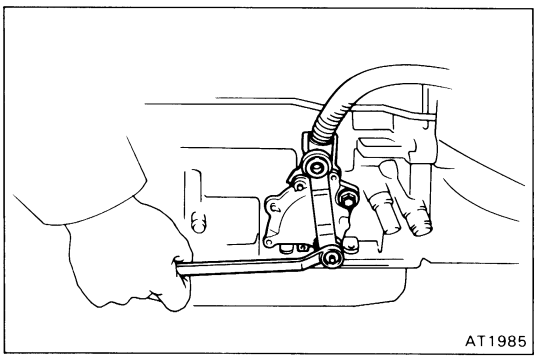
AT1985

2. REMOVE CONTROL SHAFT LEVER

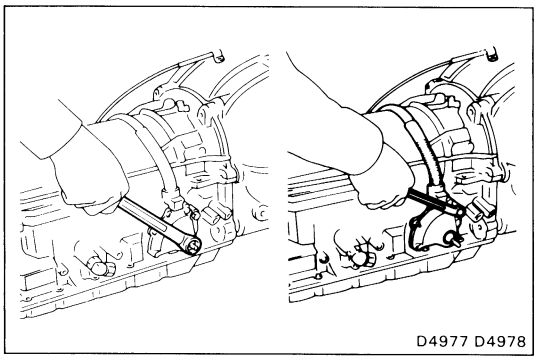
D4977 D4978

3. REMOVE NEUTRAL START SWITCH

(a) Unstake the lock washer.

(b) Remove the nut and bolt, and then remove the neutral start switch.

(c) Remove the lock washer and grommet.

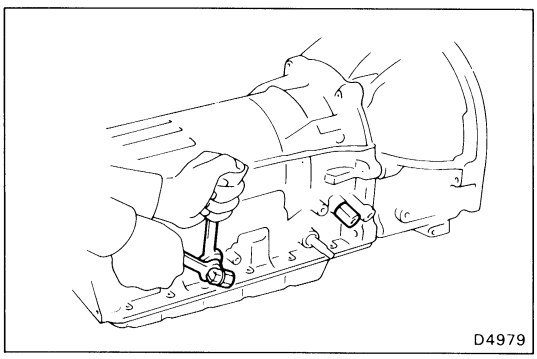
D4979

4. REMOVE UNIONS

(a) Remove the two unions.

(b) Remove the O-ring from the both unions.

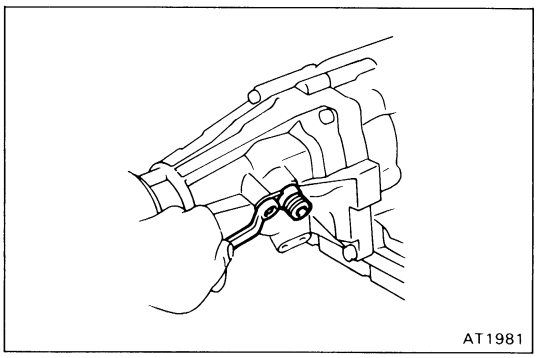
AT1981

5. REMOVE SPEEDOMETER DRIVEN GEAR

(a) Remove the speedometer driven gear.

(b) Remove the O-ring from it.

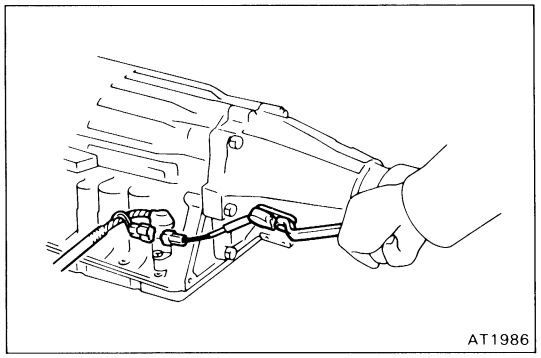

6. REMOVE SPEED SENSOR

(a) Disconnect the connector.

(b) Remove the speed sensor.

(c) Remove the O-ring from it.

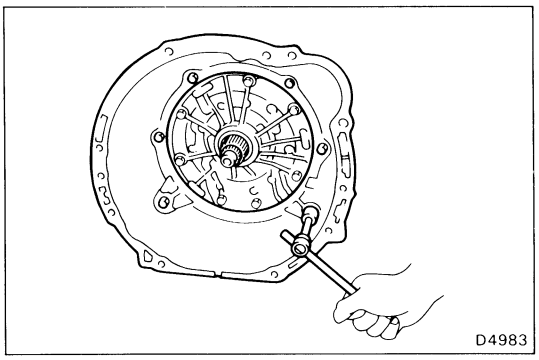

7. REMOVE TRANSMISSION HOUSING

(a) Remove the six bolts.

(b) Remove the transmission housing.

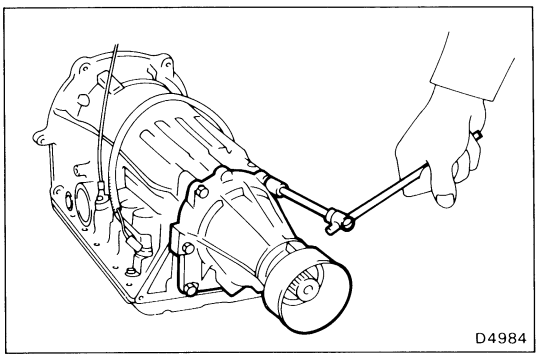

8. REMOVE EXTENSION HOUSING AND GASKET

(a) Remove the six bolts.

(b) Remove the extension housing and gasket.

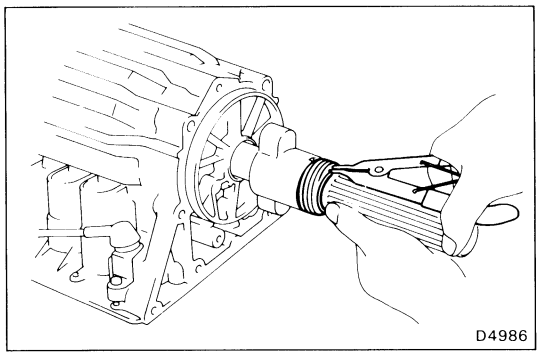

9. REMOVE SPEEDOMETER DRIVE GEAR AND BALL

(a) Using snap ring pliers, remove the snap ring.

(b) Remove the speedometer drive gear and ball.

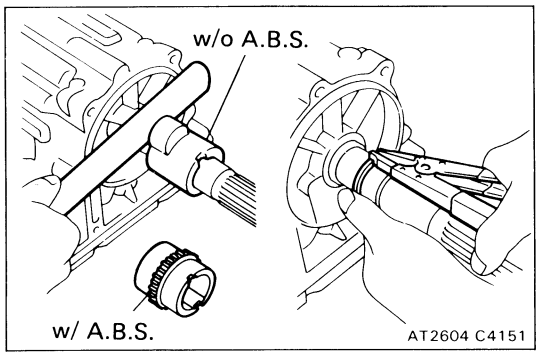

10. REMOVE SENSOR ROTOR AND KEY

(a) Remove the sensor rotor and key.

(b) Using snap ring pliers, remove the snap ring.

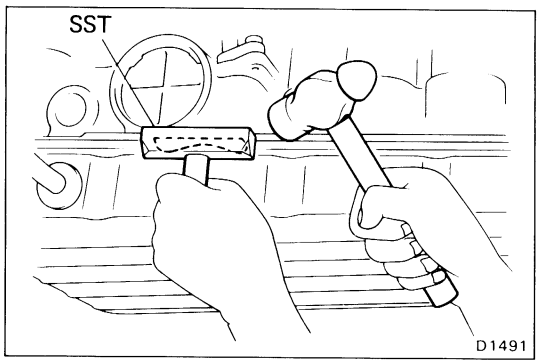

11. REMOVE OIL PAN

NOTICE: Do not turn the transmission over as this will contaminate the valve body with any foreign matter at the bottom of the pan.

(a) Remove the nineteen bolts.

(b) Insert the blade of SST between the transmission case and oil pan, cut off applied sealer.

SST 09032-00100

NOTICE: Be careful not to damage the oil pan flange.

(c) Remove pan by lifting the transmission case.

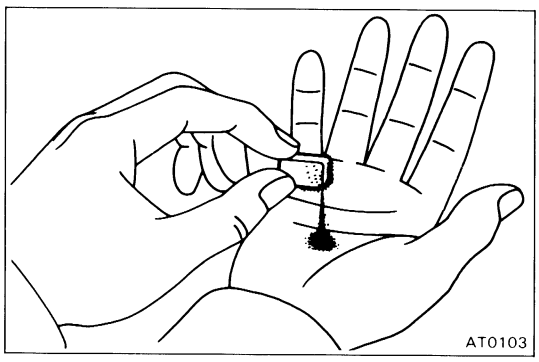

12. EXAMINE PARTICLES IN PAN

Remove the magnets and use them to collect steel particles.

Carefully look at the foreign matter and particles in the pan and on the magnets to anticipate the type of wear you will find in the transmission:

Steel (magnetic) ..... bearing, gear and clutch plate wear
Brass (non-magnetic) ... bushing wear

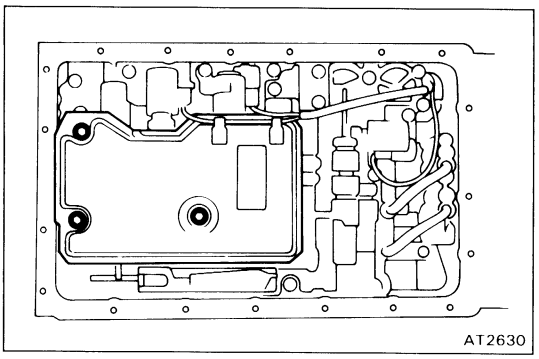

13. REMOVE OIL STRAINER AND GASKETS

(a) Turn over the transmission.

(b) Remove the three bolts holding the oil strainer to the valve body.

(c) Remove the oil strainer and two gaskets.

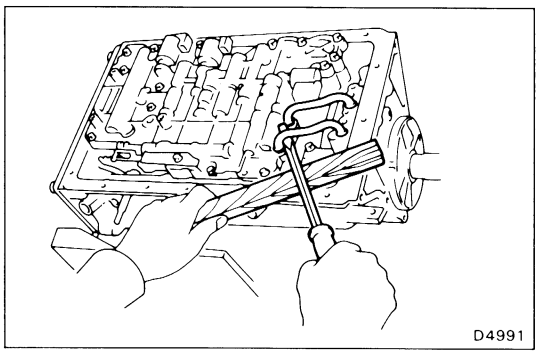

14. REMOVE OIL TUBES

Pry up both tube ends with a large screwdriver and remove the two tubes.

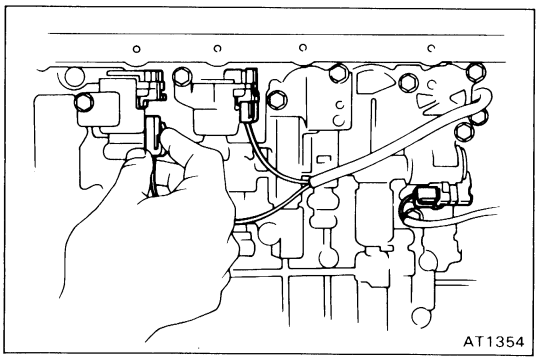

15. REMOVE SOLENOID WIRING

(a) Disconnect the three connectors from No. 1, No. 2 and lock-up solenoids.

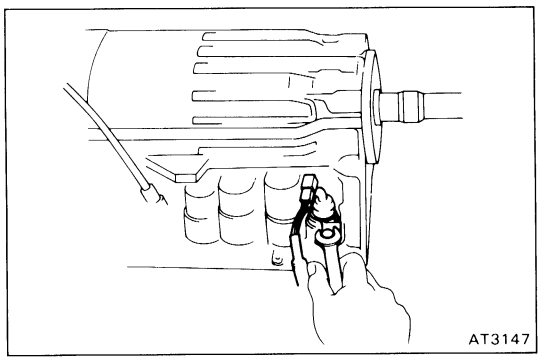

(b) Turn over transmission, remove the stopper plate from the case.

(c) Pull the wiring out of the transmission case.

(d) Remove the O-ring from the grommet.

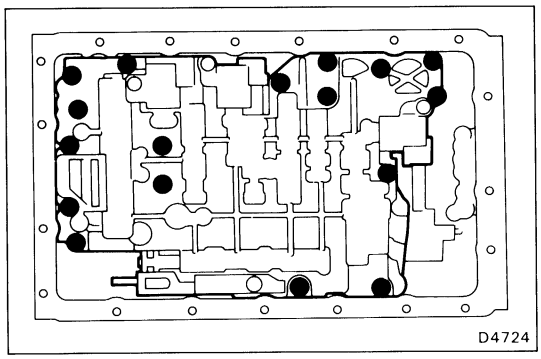

16. REMOVE VALVE BODY

(a) Remove the seventeen bolts.

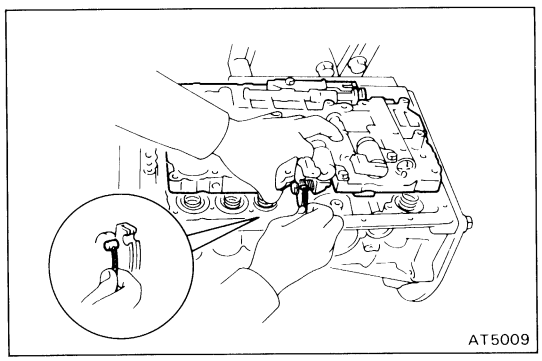

(b) Disconnect the throttle cable from the cam and remove the valve body.

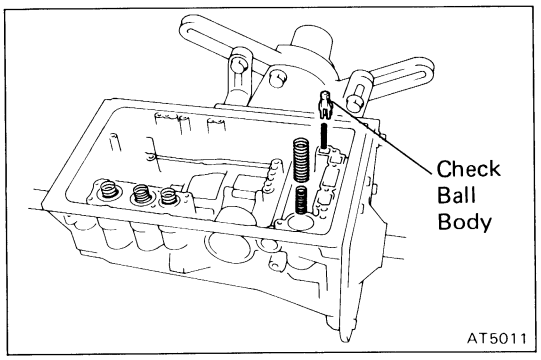

17. REMOVE CHECK BALL BODY, ACCUMULATOR SPRINGS, PINS AND PISTONS

(a) Remove the check ball body and spring.

(b) Remove the two springs from the C_0 accumulator piston.

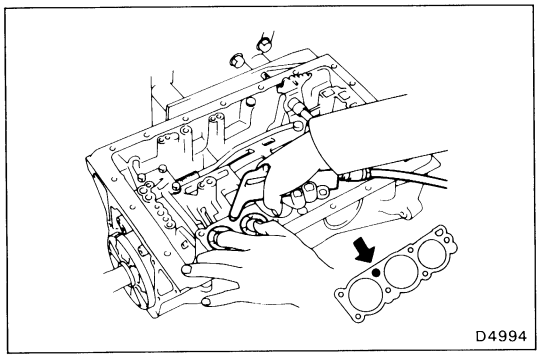

(c) Applying compressed air to the oil hole, remove the B_2 and C_2 accumulator pistons and three springs.

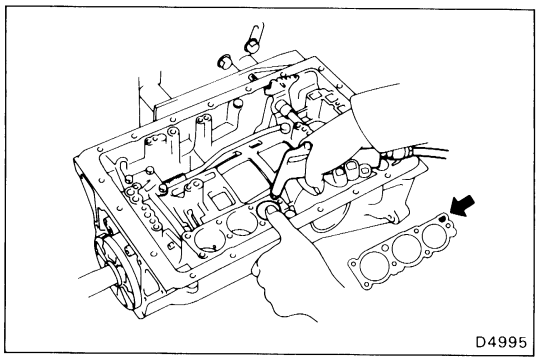

(d) Applying compressed air to the oil hole, remove the B_0 accumulator piston and spring.

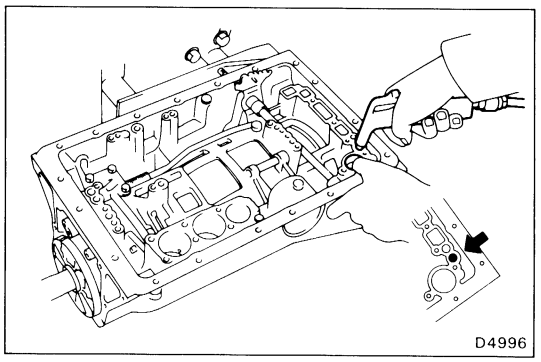

(e) Applying compressed air to the oil hole, remove the C_0 accumulator piston.

(f) Remove the O-rings from each piston.

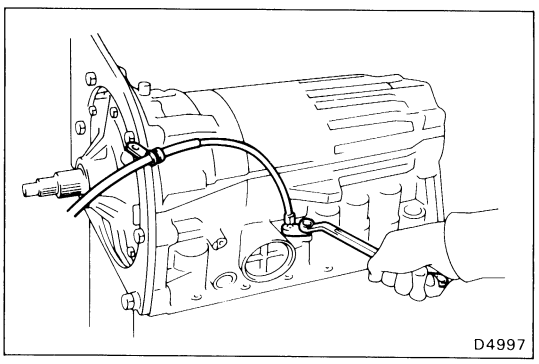

18. REMOVE THROTTLE CABLE

(a) Turn over the transmission.

(b) Remove the retaining bolt and pull out the throttle cable.

(c) Remove the O-ring from the cable.

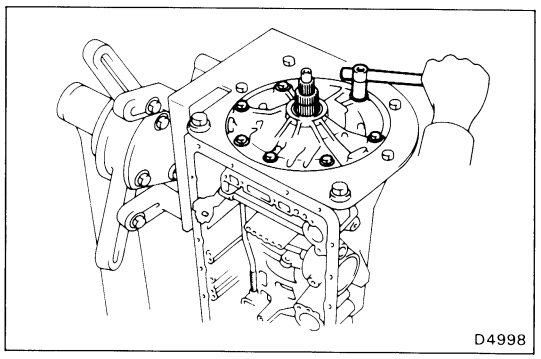

19. REMOVE OIL PUMP

(a) Stand up the transmission.

(b) Remove the seven bolts holding the oil pump to the transmission case.

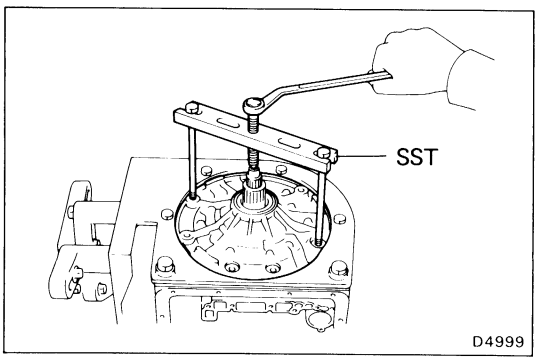

(c) Using SST, remove the oil pump.

SST 09350-30020 (09350-07020)

(d) Remove the O-ring from it.

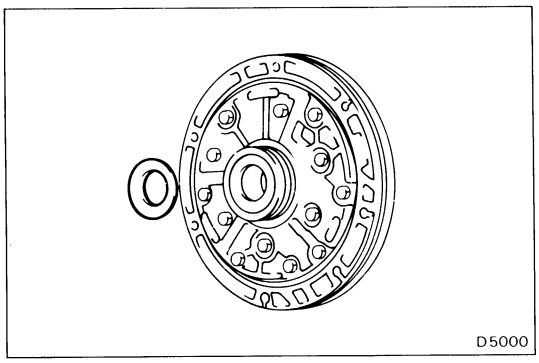

(e) Remove the race from the oil pump.

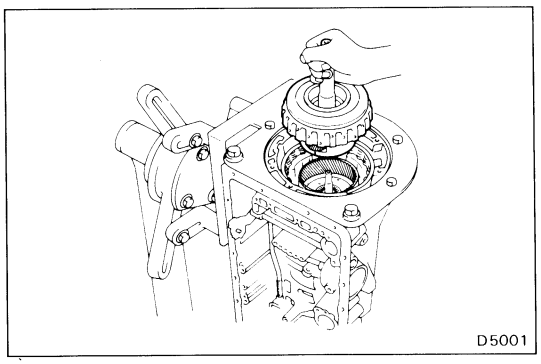

20. REMOVE OVERDRIVE PLANETARY GEAR UNIT WITH OVERDRIVE DIRECT CLUTCH AND ONE-WAY CLUTCH

(a) Remove the overdrive planetary gear with the overdrive direct clutch and one-way clutch from the transmission case.

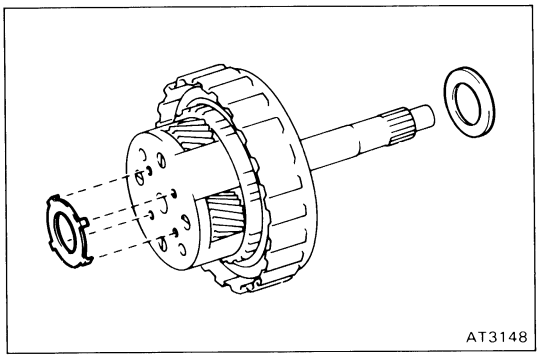

(b) Remove the race and assembled bearing and race.

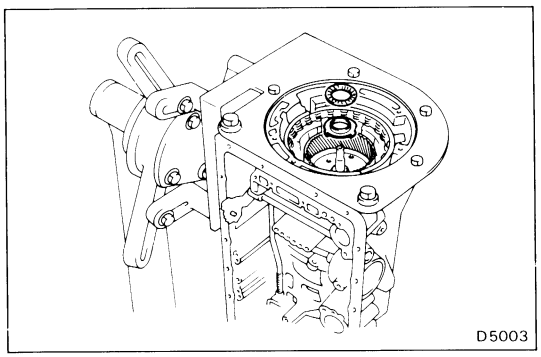

(c) Remove the bearing and race.

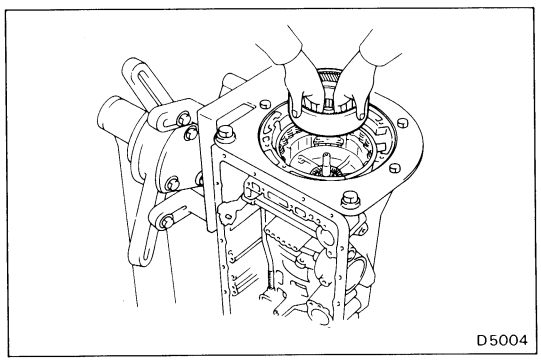

(d) Remove the overdrive planetary ring gear from the transmission case.

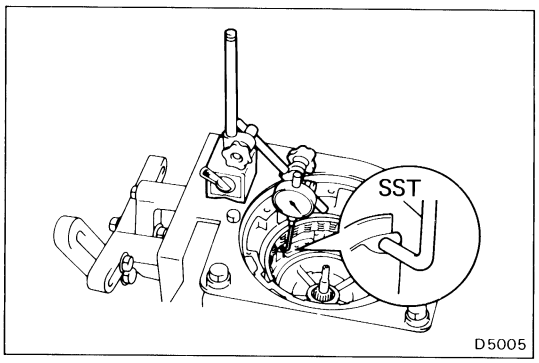

21. CHECK PISTON STROKE OF OVERDRIVE BRAKE

(a) Place SST and a dial indicator onto the overdrive brake piston as shown in the figure.

SST 09350-30020 (09350-06120)

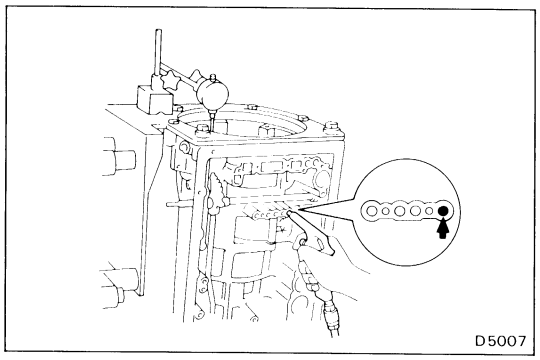

(b) Measure the stroke applying and releasing the compressed air (4 — 8 kg/cm², 57 — 114 psi or 392 — 785 kPa) as shown in the figure.

Piston stroke:

7M-GE 1.40 — 1.70 mm (0.0551 — 0.0669 in.)
7M-GTE 1.75 — 2.05 mm (0.0689 — 0.0807 in.)

If the values are nonstandard, inspect the discs. (See page AT-80)

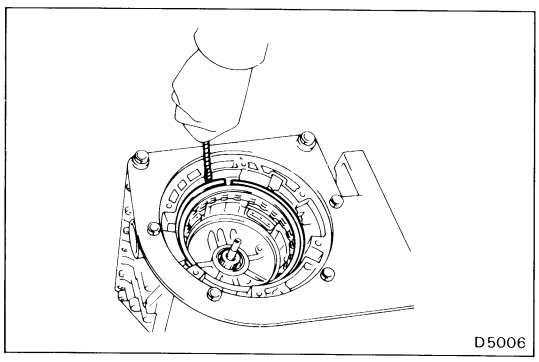

22. REMOVE FLANGES, PLATES AND DISCS OF OVERDRIVE BRAKE

(a) Remove the snap ring.

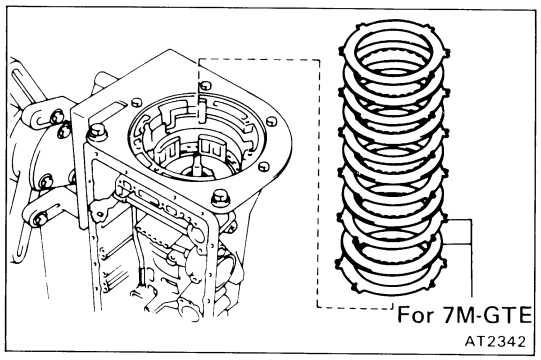

(b) Remove the flanges, plates and discs as a set.

7M-GE: Two flanges, three plates and four discs
7M-GTE: Two flanges, four plates and five discs

The method of inspection, refer to AT-80.

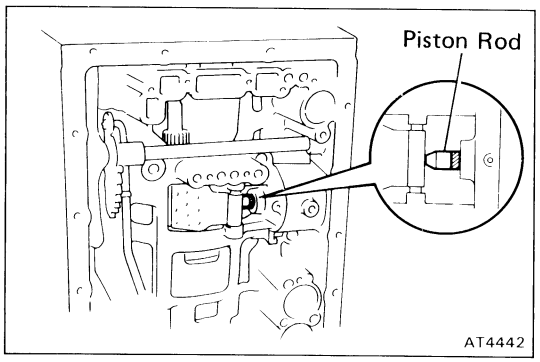

23. CHECK PISTON ROD STROKE OF SECOND COAST BRAKE

(a) Place a mark on the second coast brake piston rod as shown in the figure.

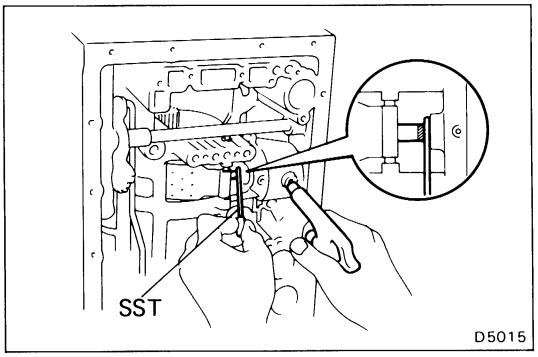

(b) Using SST, measure the stroke applying the compressed air (4 — 8 kg/cm², 57 — 114 psi or 392 — 785 kPa) as shown in the figure.

SST 09240-00020

Piston rod stroke: 1.5 — 3.0 mm (0.059 — 0.118 in.)

If the values are nonstandard, inspect the brake band. (See page AT-93)

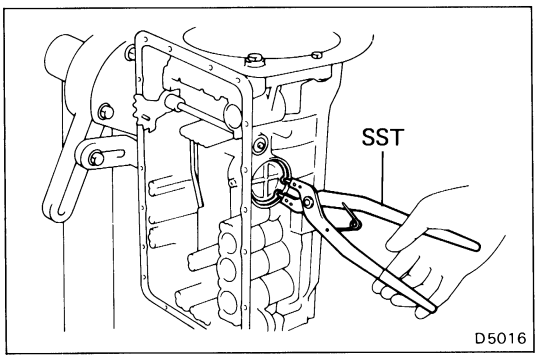

24. REMOVE SECOND COAST BRAKE COVER, PISTON ASSEMBLY AND SPRING

(a) Using SST, remove the snap ring.

SST 09350-30020 (09350-07060)

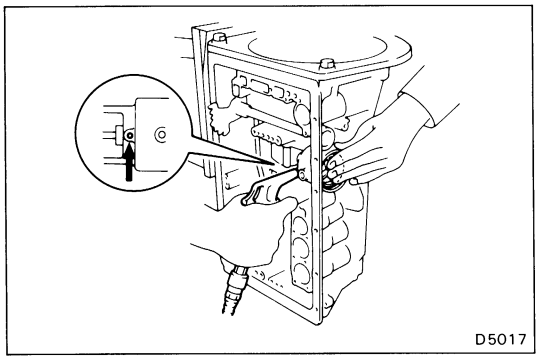

(b) Applying compressed air to the oil hole, remove the second coast brake cover, piston assembly and spring.

(c) Remove the two O-rings from the cover.

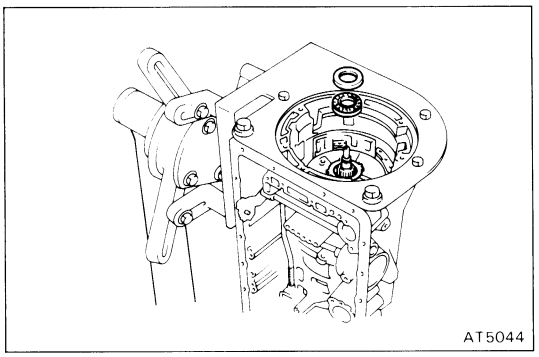

25. REMOVE OVERDRIVE SUPPORT ASSEMBLY

(a) Remove the bearing and race.

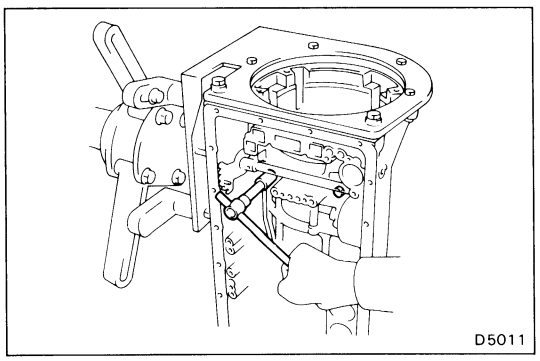

(b) Remove the two bolts holding the overdrive support assembly to the case.

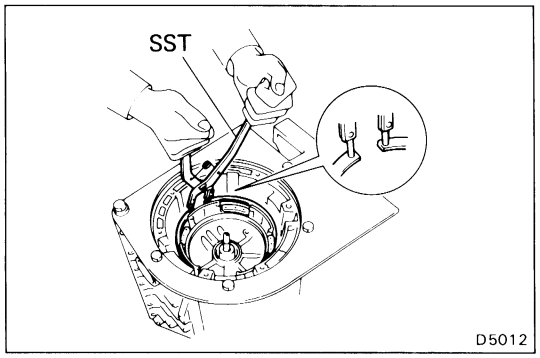

(c) Using SST, remove the snap ring.
SST 09350-30020 (09350-07060)

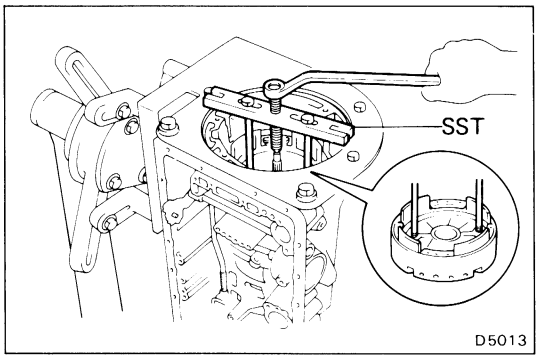

(d) Using SST, remove the overdrive support assembly.
SST 09350-30020 (09350-07020)

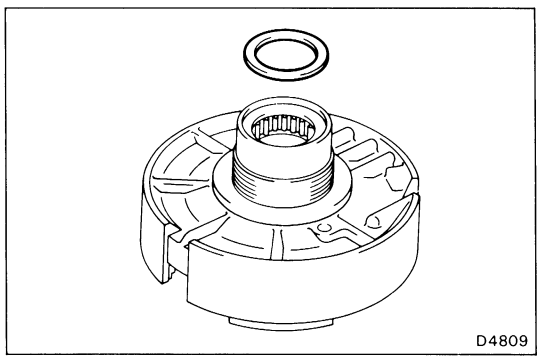

(e) Remove the race.

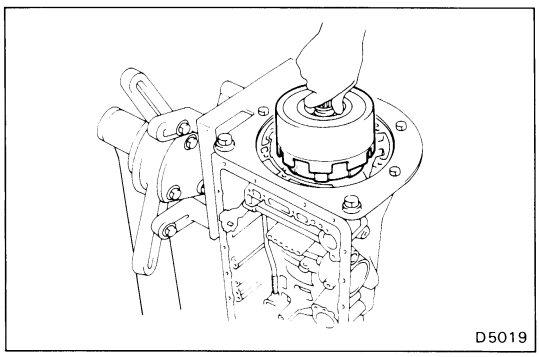

26. REMOVE DIRECT CLUTCH WITH FORWARD CLUTCH

(a) Remove the direct clutch with forward clutch from the case.

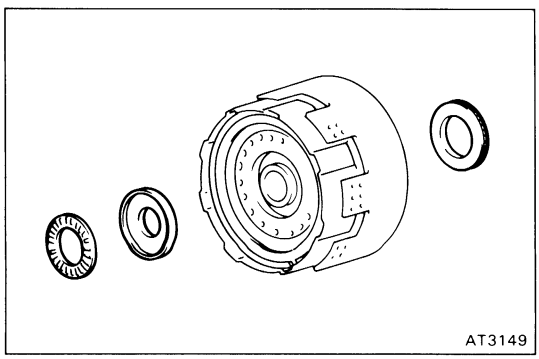

(b) Remove the two bearings and race.

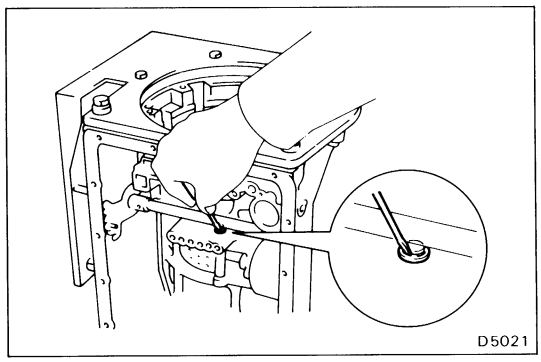

27. REMOVE SECOND COAST BRAKE BAND

(a) Remove the E-ring from the pin.

(b) Remove the pin from the brake band.

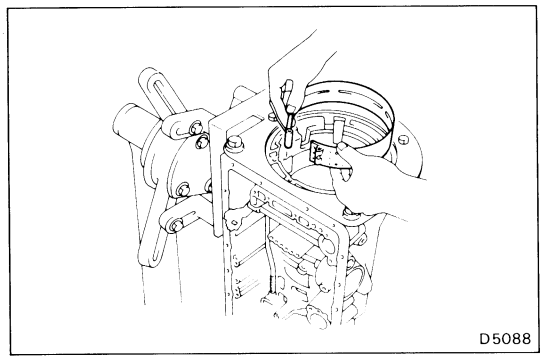

(c) Remove the second coast brake band from the case.

For the method of inspection, refer to AT-93.

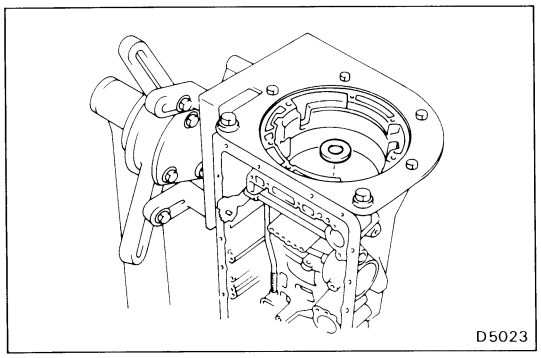

28. REMOVE FRONT PLANETARY GEAR UNIT

(a) Remove the race.

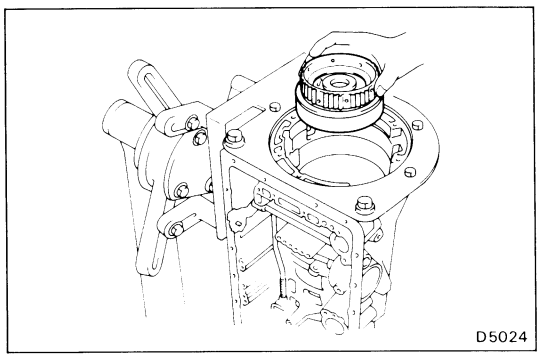

(b) Remove the front planetary ring gear from the case.

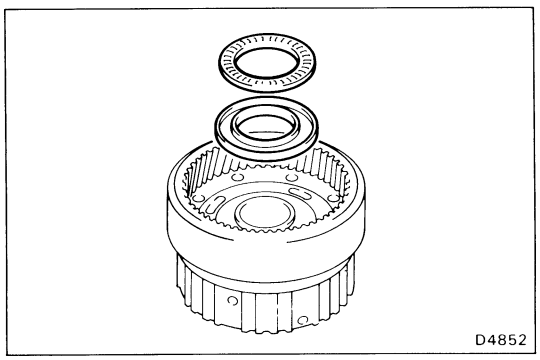

(c) Remove the bearing and race.

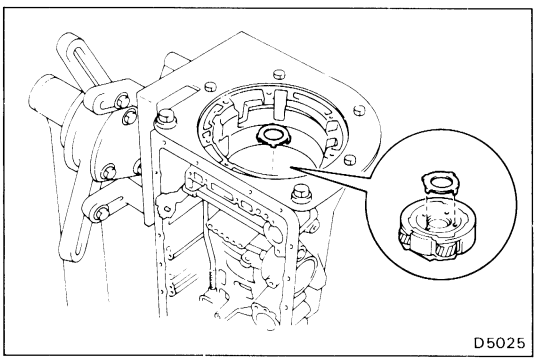

(d) Remove the race.

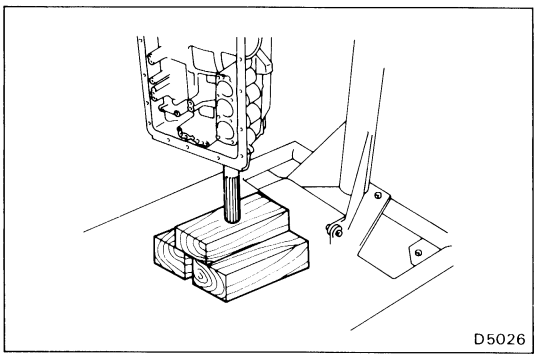

(e) With wooden blocks under the output shaft, stand the transmission on the output shaft.

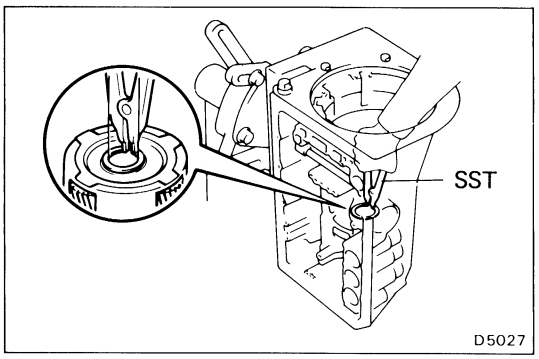

(f) Using SST, remove the snap ring.

SST 09350-30020 (09350-07070)

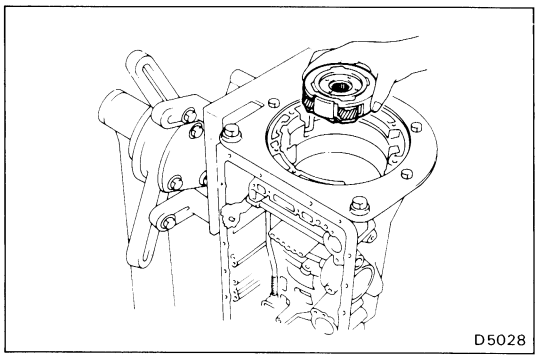

(g) Remove the front planetary gear from the case.

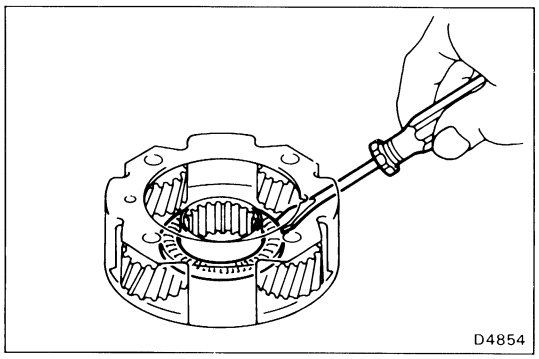

(h) Remove the bearing and race from the front planetary gear.

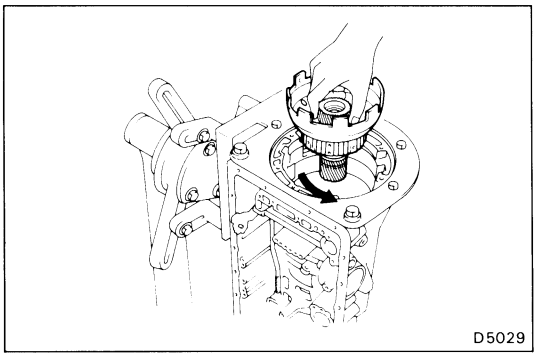

29. REMOVE PLANETARY SUN GEAR WITH NO. 1 ONE-WAY CLUTCH

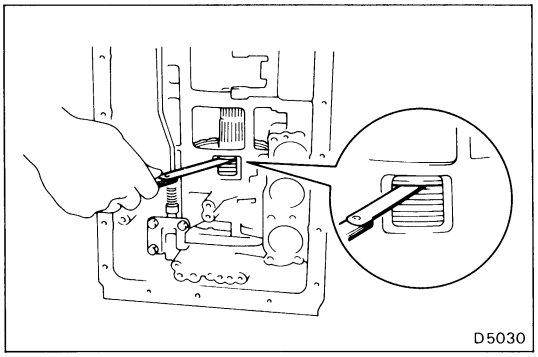

30. CHECK PACK CLEARANCE OF SECOND BRAKE

Using a thickness gauge, measure the clearance between the snap ring and flange as shown in the figure.

Clearance: 0.62 — 1.98 mm (0.0244 — 0.0780 in.)

If the values are nonstandard, inspect the discs. (See page AT-101)

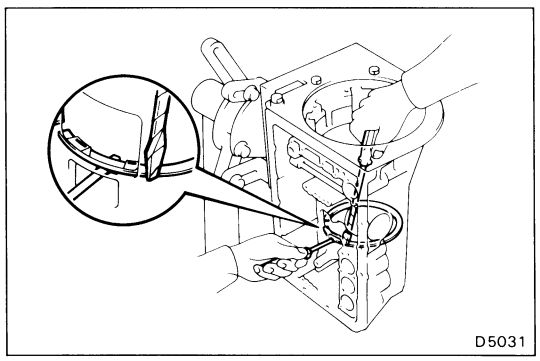

31. REMOVE FLANGE, PLATES AND DISCS OF SECOND BRAKE

(a) Remove the snap ring.

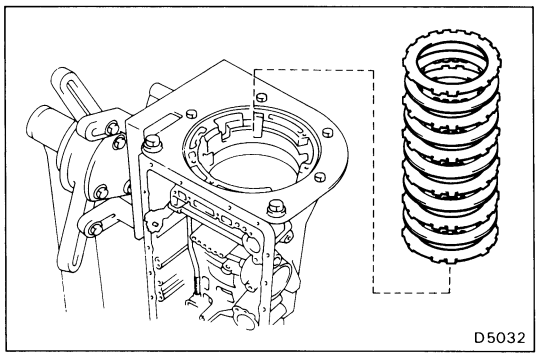

(b) Remove the flange, five plates and five discs as a set.

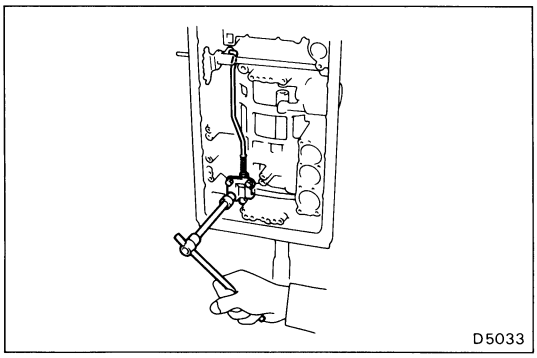

32. REMOVE PARKING LOCK ROD AND PAWL

(a) Remove the parking lock pawl bracket.

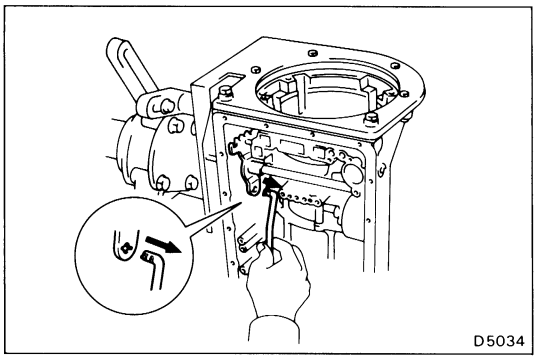

(b) Disconnect the parking lock rod from the manual valve lever.

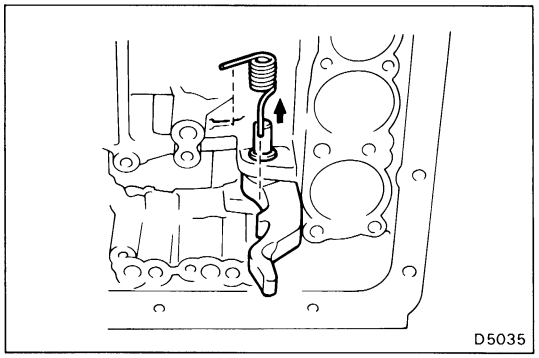

(c) Remove the spring, parking lock pawl and shaft.

(d) Remove the E-ring from the shaft.

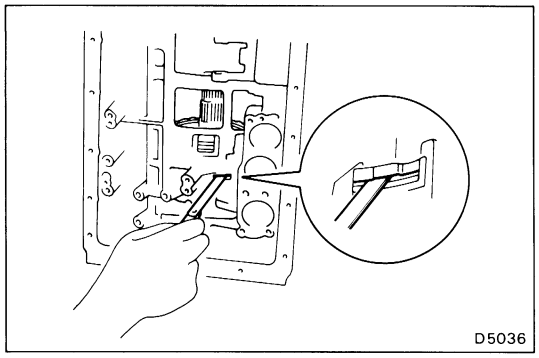

33. CHECK PACK CLEARANCE OF FIRST AND REVERSE BRAKE

Using a thickness gauge, measure the clearance between the plate and second brake drum as shown in the figure.

Clearance:

7M-GE 0.60 — 1.12 mm (0.0236 — 0.0441 in.)
7M-GTE 0.70 — 1.22 mm (0.0276 — 0.0480 in.)

If the values are nonstandard, inspect the discs.
(See page AT-103)

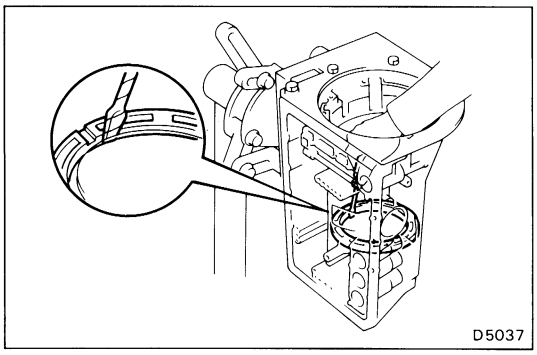

34. REMOVE SECOND BRAKE PISTON SLEEVE

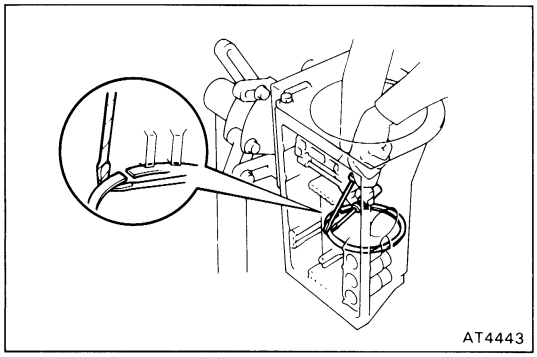

35. REMOVE REAR PLANETARY GEAR UNIT WITH SECOND BRAKE DRUM, FIRST AND REVERSE BRAKE PACK AND OUTPUT SHAFT

(a) Using two screwdrivers, remove the snap ring.

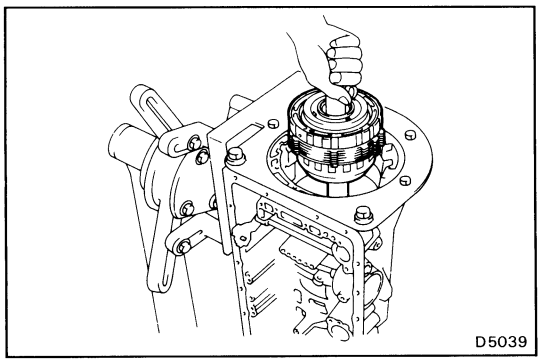

(b) Remove the rear planetary gear, second brake drum, first and reverse brake pack and output shaft as an assembly.

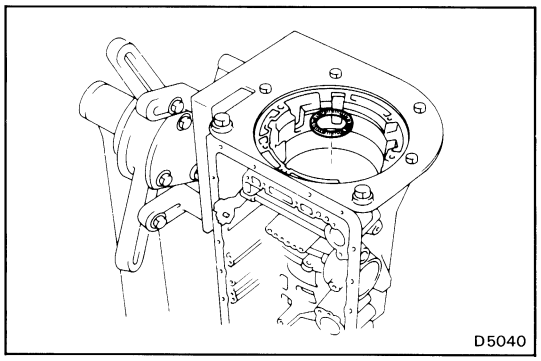

(c) Remove the assembled thrust bearing and race from the case.

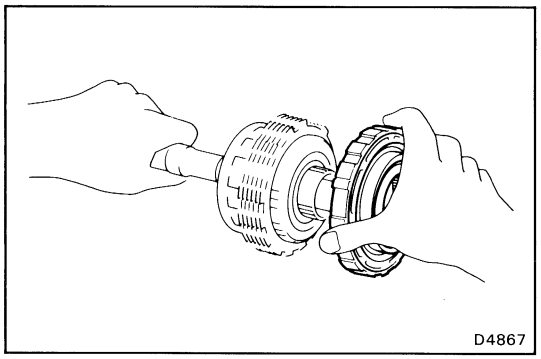

(d) Remove the second brake drum assembly.

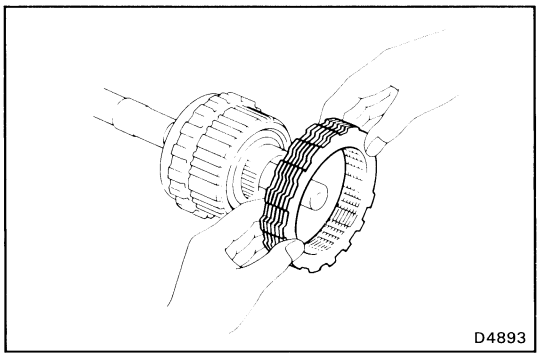

(e) Remove the flange, plates and discs of the first and reverse brake.

7M-GE: One flange, six plates and six discs
7M-GTE: One flange, seven plates and seven discs

For the method of inspection, refer to AT-103.

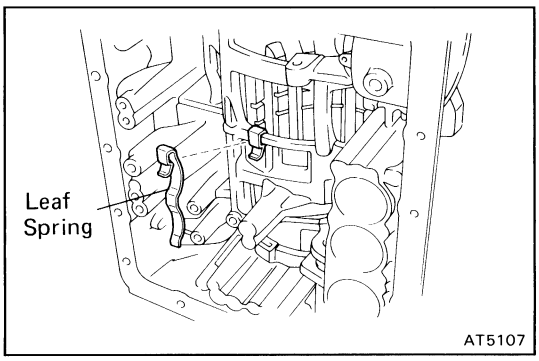

36. REMOVE LEAF SPRING

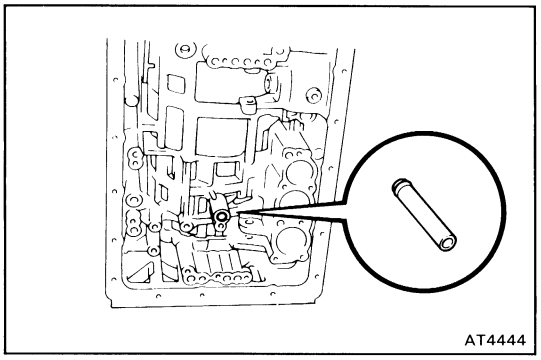

37. REMOVE BRAKE DRUM GASKET

Using a screwdriver, remove the gasket.

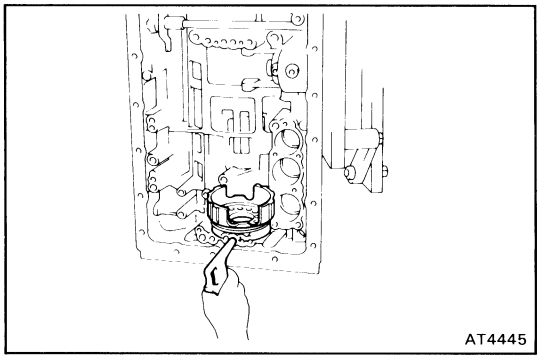

38. CHECK FIRST AND REVERSE BRAKE PISTONS MOVING

Make sure the first and reverse brake pistons move smoothly when applying and releasing the compressed air into the transmission case.

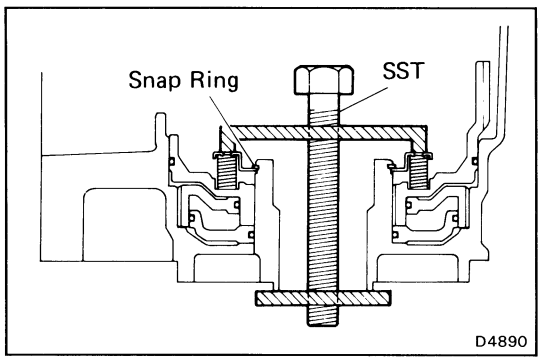

39. REMOVE COMPONENTS OF FIRST AND REVERSE BRAKE PISTON

(a) Set SST on the spring retainer, and compress the return spring.

SST 09350-30020 (09350-07050)

(b) Remove the snap ring with snap ring pliers.

(c) Remove the piston return spring.

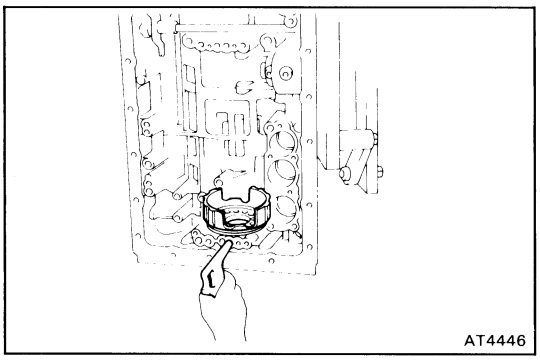

(d) Hold No. 2 first and reverse brake piston with hand, apply compressed air to transmission case to remove No. 2 first and reverse brake piston.

(e) Remove No. 2 first and reverse brake piston.

If the piston does not pop out with compressed air, lift the piston out with needle-nose pliers.

(f) Remove the O-ring from No. 2 piston.

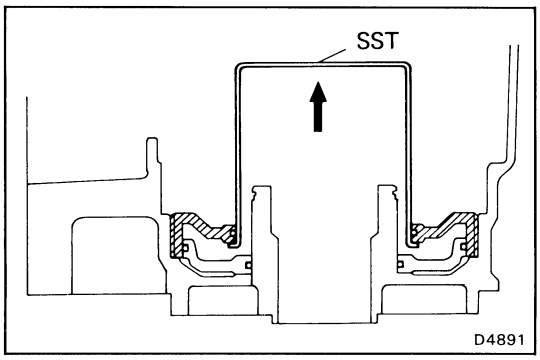

(g) Insert SST behind the reaction sleeve and gradually lift it out of the transmission case.

SST 09350-30020 (09350-07080)

(h) Remove the O-ring from the reaction sleeve.

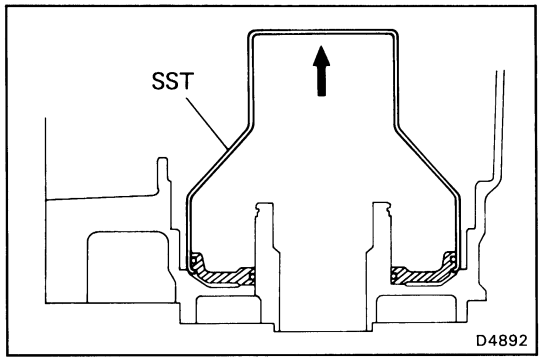

(i) Insert SST behind No. 1 brake piston and gradually lift it out of the transmission case.

SST 09350-30020 (09350-07090)

(j) Remove the two O-rings from No. 1 piston.

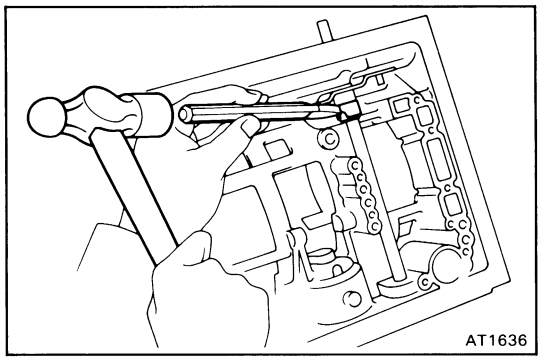

40. REMOVE MANUAL VALVE LEVER, SHAFT AND OIL SEALS

(a) Using a chisel, cut off the spacer and remove it from the shaft.

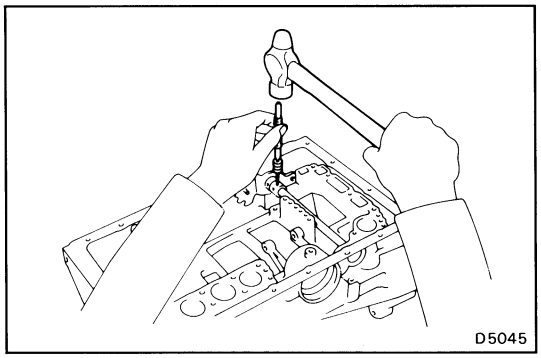

(b) Using a pin punch, drive out the pin.

(c) Pull the manual valve lever shaft out through the case and remove the lever.

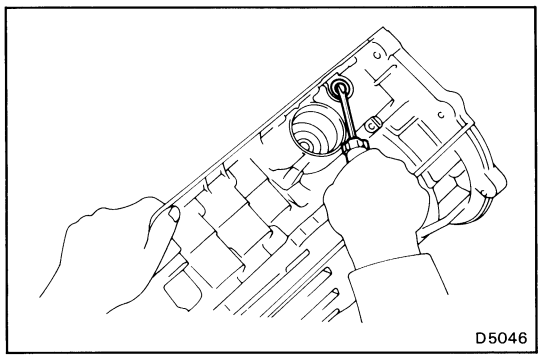

(d) Using a screwdriver, remove the two oil seals.

COMPONENT PARTS

General Notes

The instructions here are organized so that you work on only one component group at a time.
This will help avoid confusion from similar-looking parts of different subassemblies being on your workbench at the same time.
The component groups are inspected and repaired from the converter housing side.
As much as possible, complete the inspection, repair and assembly before proceeding to the next component group. If a component group can not be assembled because parts are being ordered, be sure to keep all parts of that group in a separate container while proceeding with disassembly, inspection, repair and assembly of other component groups.
Recommended ATF: DEXRON® II

GENERAL CLEANING NOTES:

1. All disassembled parts should be washed clean, with any fluid passages and holes blown through with compressed air.
2. When using compressed air to dry parts, always aim away from yourself to prevent accidentally spraying automatic transmission fluid or kerosene on your face.
3. The recommended automatic transmission fluid or kerosene should be used for cleaning.

PARTS ARRANGEMENT:

1. After cleaning, the parts should be arranged in proper order to allow efficient inspection, repairs, and reassembly.
2. When disassembling a valve body, be sure to keep each valve together with the corresponding spring.
3. New brakes and clutches that are to be used for replacement must be soaked in transmission fluid for at least two hours before assembly.

GENERAL ASSEMBLY:

1. All oil seal rings, clutch discs, clutch plates, rotating parts, and sliding surfaces should be coated with transmission fluid prior to reassembly.
2. All gaskets and rubber O-rings should be replaced.
3. Make sure that the ends of a snap ring are not aligned with one of the cutouts and are installed in the groove correctly.
4. If a worn bushing is to be replaced, the subassembly containing that bushing must also be replaced.
5. Check thrust bearings and races for wear or damage. Replace if necessary.
6. Use petroleum jelly to keep parts in place.

Oil Pump

COMPONENTS

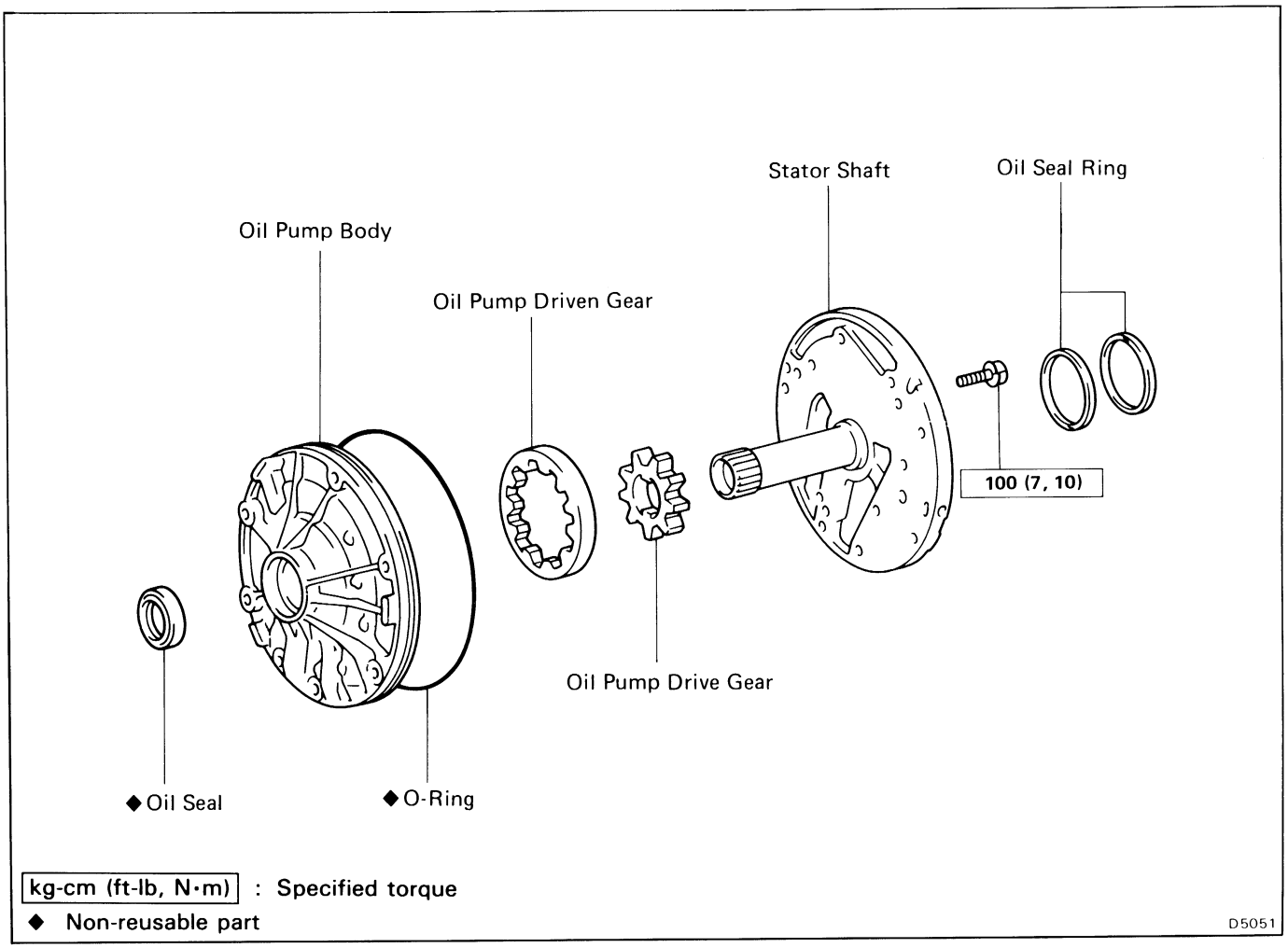

DISASSEMBLY OF OIL PUMP

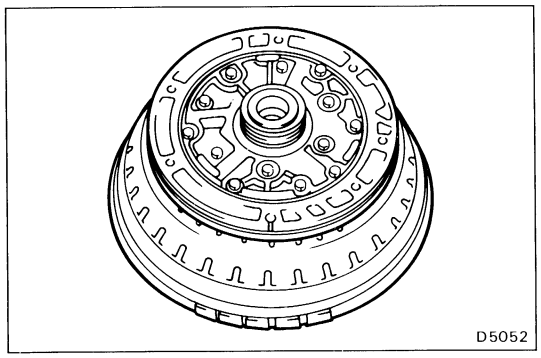

1. USE TORQUE CONVERTER AS WORK STAND

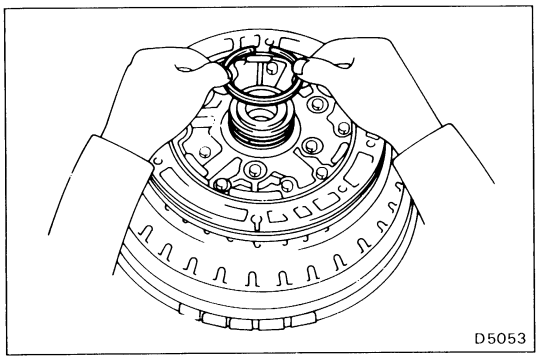

2. REMOVE OIL SEAL RINGS

Remove the two oil seal rings.

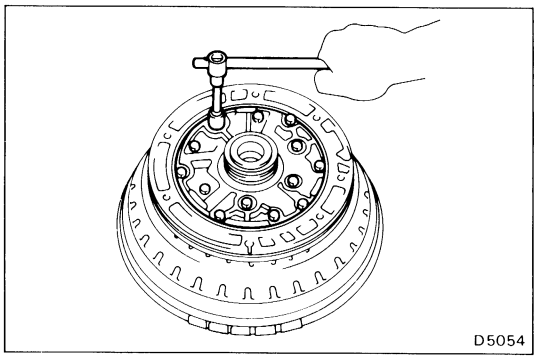

3. **REMOVE STATOR SHAFT**

Remove the thirteen bolts, and then remove the stator shaft from the oil pump body.

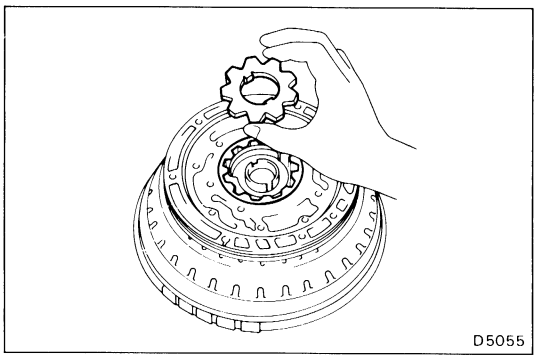

4. **REMOVE OIL PUMP DRIVE GEAR AND DRIVEN GEAR**

INSPECTION OF OIL PUMP

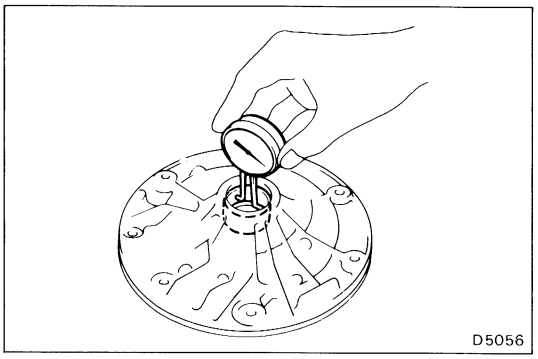

1. **CHECK OIL PUMP BODY BUSHING**

Using a dial indicator, measure the inside diameter of the oil pump body bushing.

Maximum inside diameter: 38.19 mm (1.5035 in.)

If the inside diameter is greater than the maximum, replace the oil pump body.

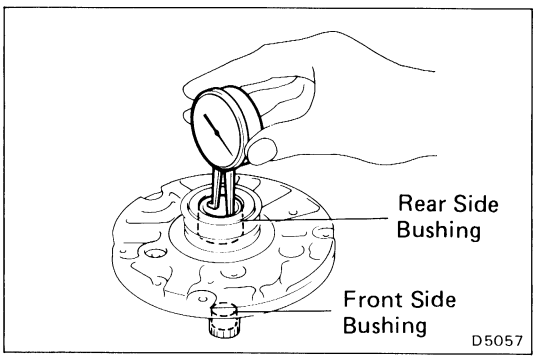

2. **CHECK STATOR SHAFT BUSHING**

Using a dial indicator, measure the inside diameter of the stator shaft bushing.

Maximum inside diameter:
Front side 21.58 mm (0.8496 in.)
Rear side 27.08 mm (1.0661 in.)

If the inside diameter is greater than the maximum, replace the stator shaft.

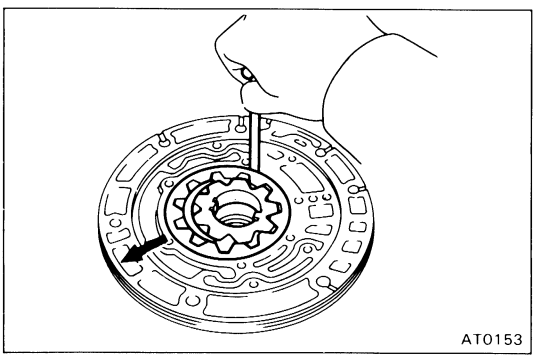

3. **CHECK BODY CLEARANCE OF DRIVEN GEAR**

Push the driven gear to one side of the body.

Using a feeler gauge, measure the clearance.

Standard body clearance: 0.07 — 0.15 mm (0.0028 — 0.0059 in.)

Maximum body clearance: 0.3 mm (0.012 in.)

If the body clearance is greater than the maximum, replace the drive gear, driven gear or pump body.

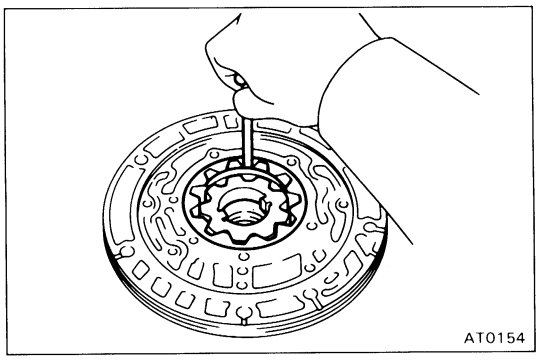

4. CHECK TIP CLEARANCE OF DRIVEN GEAR

Measure between the driven gear teeth and the crescent-shaped part of the pump body.

Standard tip clearance: 0.11 — 0.14 mm (0.0043 — 0.0055 in.)

Maximum tip clearance: 0.3 mm (0.012 in.)

If the tip clearance is greater than the maximum, replace the drive gear, driven gear or pump body.

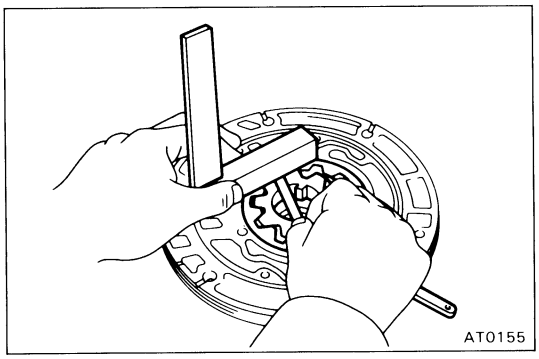

5. CHECK SIDE CLEARANCE OF BOTH GEARS

Using a steel straight edge and a feeler gauge, measure the side clearance of both gears.

Standard side clearance: 0.02 — 0.05 mm (0.0008 — 0.0020 in.)

Maximum side clearance: 0.1 mm (0.004 in.)

If the side clearance is greater than the maximum, replace the drive gear, driven gear or pump body.

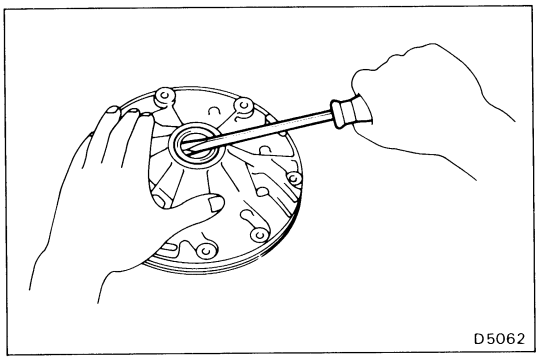

6. IF NECESSARY, REPLACE OIL SEAL

(a) Pry off the oil seal with a screwdriver.

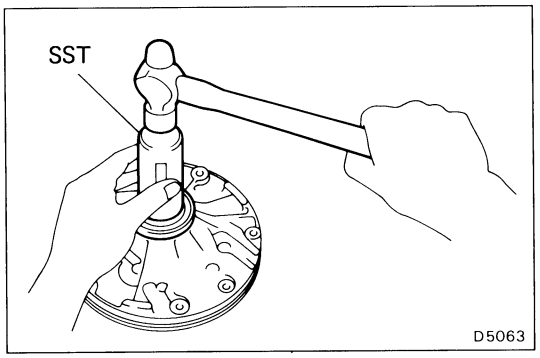

(b) Using SST, install a new oil seal.

The oil seal end should be flushed with the outer edge of the pump body.

SST 09350-30020 (09351-32140)

(c) Coat the oil seal lip with MP grease.

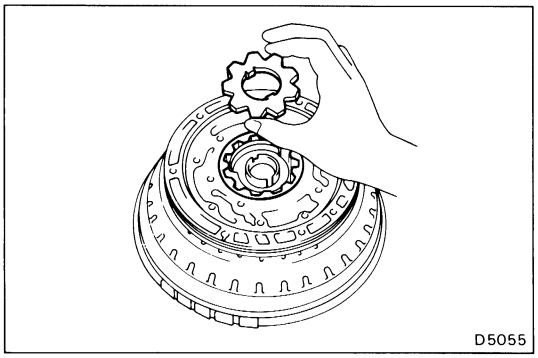

ASSEMBLY OF OIL PUMP

1. INSTALL DRIVEN GEAR AND DRIVE GEAR TO OIL PUMP BODY

(a) Place the oil pump body on the torque converter.

(b) Coat the driven gear and drive gear with ATF.

(c) Install the driven gear and drive gear.

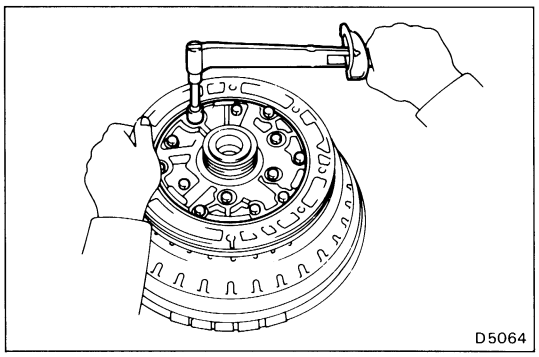

2. INSTALL STATOR SHAFT TO OIL PUMP BODY

(a) Align the stator shaft with each bolt hole.

(b) Tighten the thirteen bolts.

Torque: 100 kg-cm (7 ft-lb, 10 N·m)

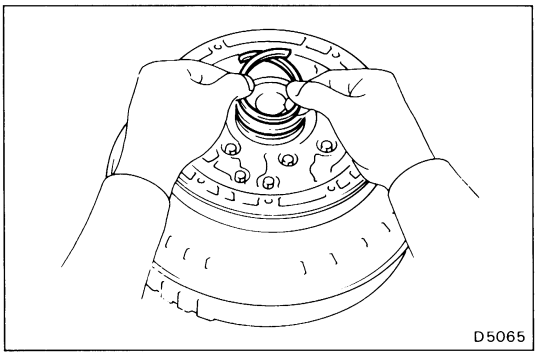

3. INSTALL OIL SEAL RINGS

(a) Coat the two oil seal rings with ATF.

(b) Contract the oil seal rings as shown, and install them onto the stator shaft.

NOTICE: Do not spread the ring ends too much.

HINT: After installing the oil seal rings, check that they rotate smoothly.

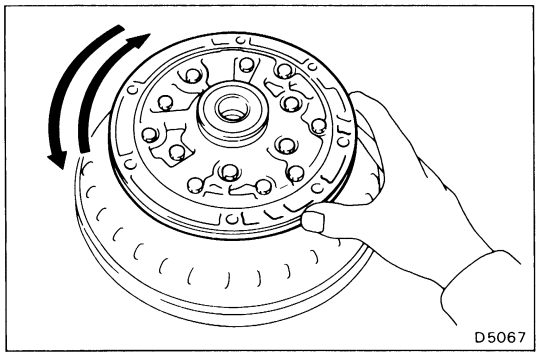

4. CHECK OIL PUMP DRIVE GEAR ROTATION

Make sure the drive gear rotates smoothly.

Overdrive Planetary Gear, Overdrive Direct Clutch and Overdrive One-Way Clutch

COMPONENTS

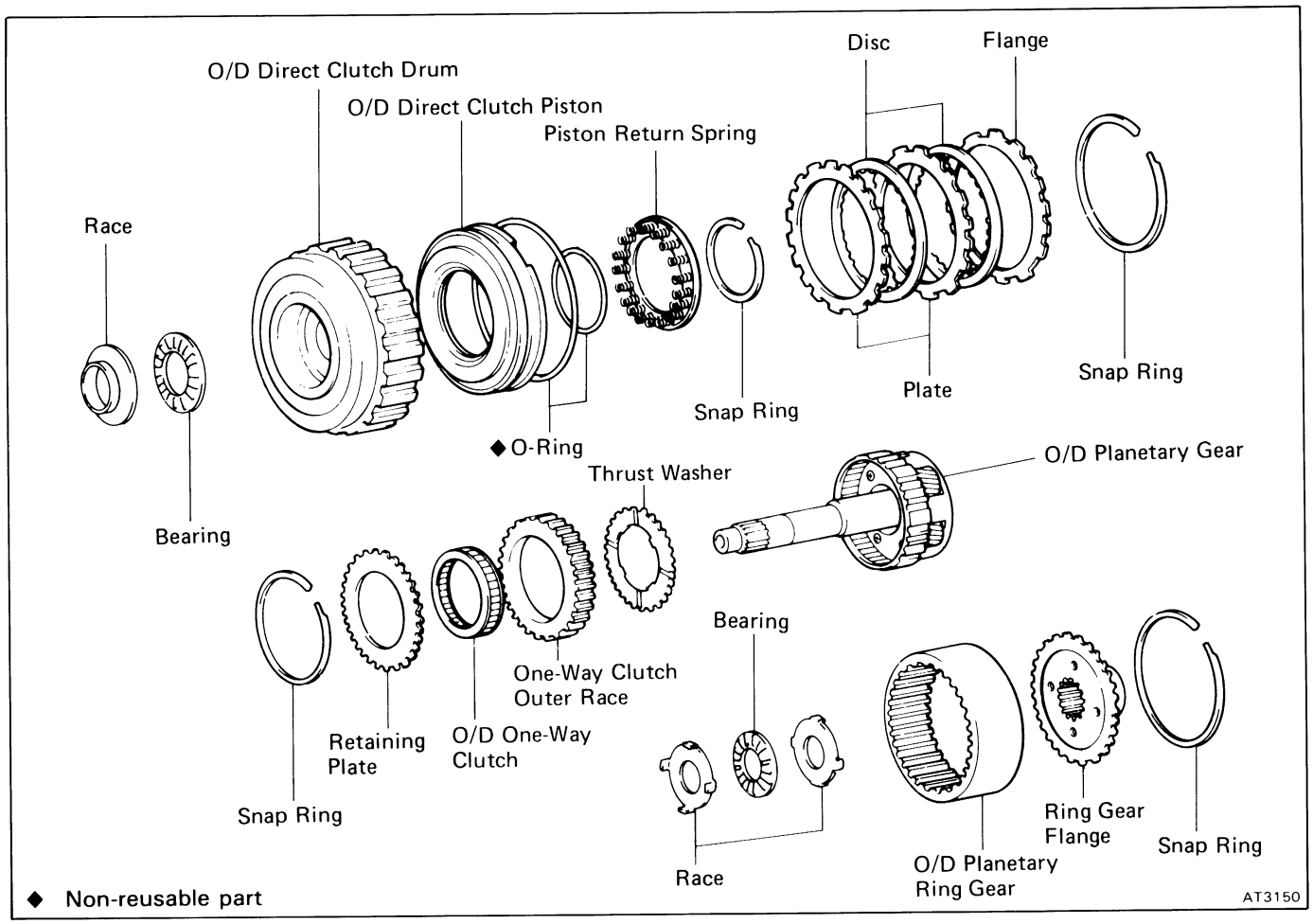

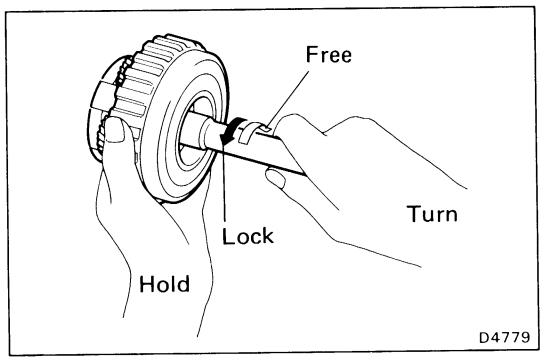

DISASSEMBLY OF OVERDRIVE PLANETARY GEAR, OVERDRIVE DIRECT CLUTCH AND OVERDRIVE ONE-WAY CLUTCH

1. CHECK OPERATION OF ONE-WAY CLUTCH

Hold the O/D direct clutch drum and turn the input shaft. The input shaft turns freely clockwise and locks counter-clockwise.

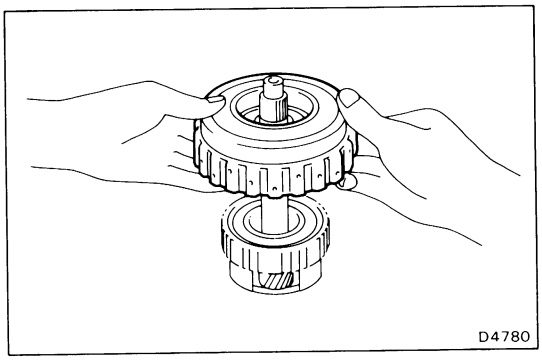

2. REMOVE OVERDRIVE DIRECT CLUTCH ASSEMBLY FROM OVERDRIVE PLANETARY GEAR

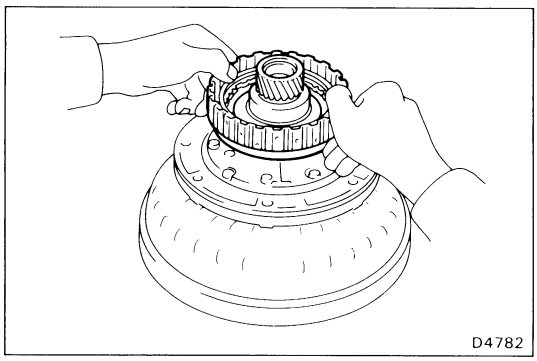

3. CHECK PISTON STROKE OF OVERDRIVE DIRECT CLUTCH

(a) Place the oil pump onto the torque converter, and then place the O/D direct clutch assembly onto the oil pump.

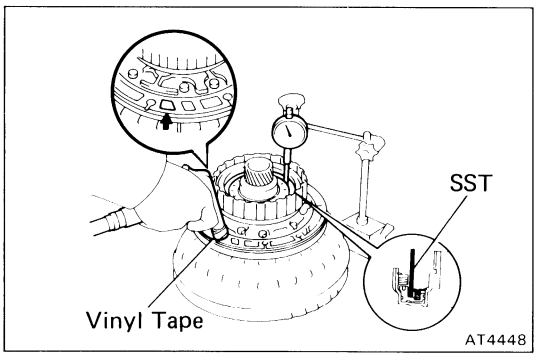

(b) Using SST and a dial indicator, measure the O/D direct clutch piston stroke applying and releasing the compressed air (4 — 8 kg/cm², 57 — 114 psi or 392 — 785 kPa) as shown.

SST 09350-30020 (09350-06120)

Piston stroke: 1.85 — 2.15 mm (0.0728 — 0.0846 in.)

If the values are nonstandard, inspect the discs.

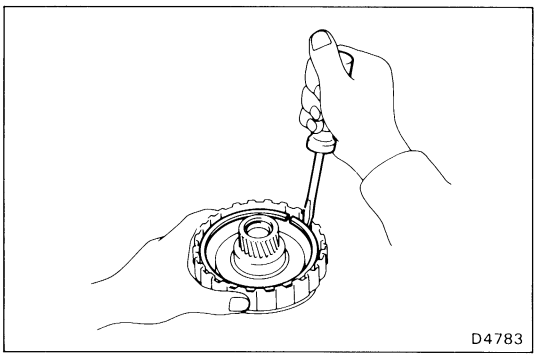

4. REMOVE FLANGE, PLATES AND DISCS

(a) Remove the snap ring from the O/D direct clutch drum.

(b) Remove the flange, two plates and two discs.

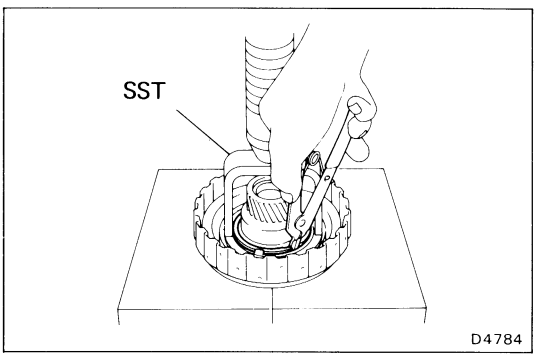

5. REMOVE PISTON RETURN SPRING

(a) Place SST on the spring retainer and compress the return spring with a shop press.

SST 09350-30020 (09350-07040)

(b) Using snap ring pliers, remove the snap ring.

(c) Remove the piston return spring.

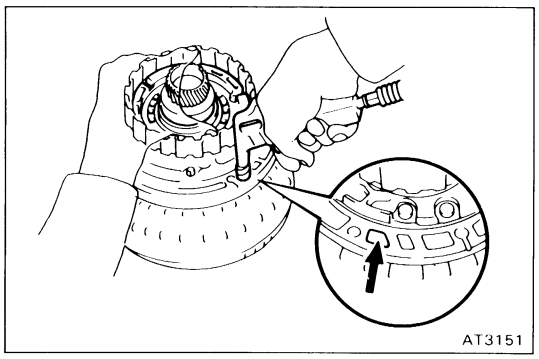

6. REMOVE OVERDRIVE DIRECT CLUTCH PISTON

(a) Place the oil pump onto the torque converter and then place the O/D direct clutch onto the oil pump.

(b) Hold the O/D direct clutch piston with hand, apply compressed air to the oil pump to remove the O/D direct clutch piston.

(c) Remove the O/D direct clutch piston.

(d) Remove the two O-rings from the piston.

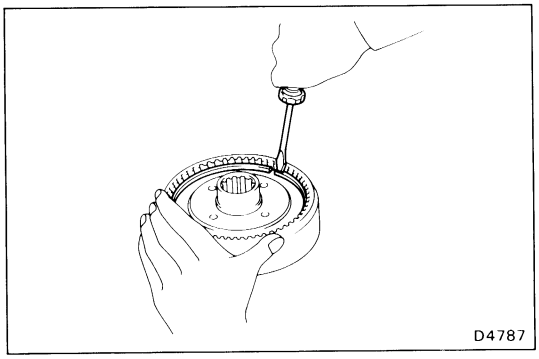

7. REMOVE RING GEAR FLANGE

(a) Remove the snap ring.

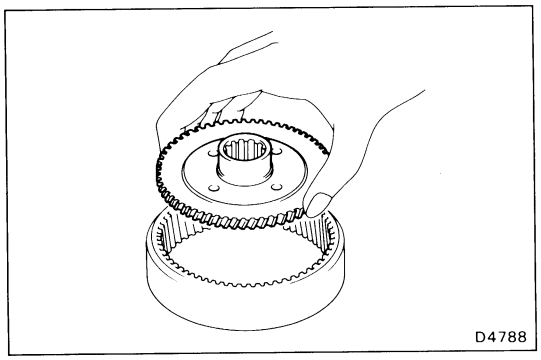

(b) Remove the ring gear flange.

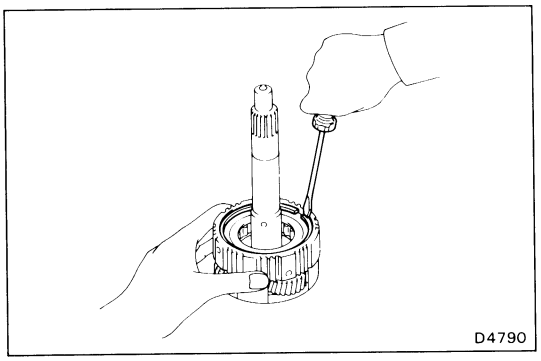

8. REMOVE RETAINING PLATE

(a) Remove the snap ring.

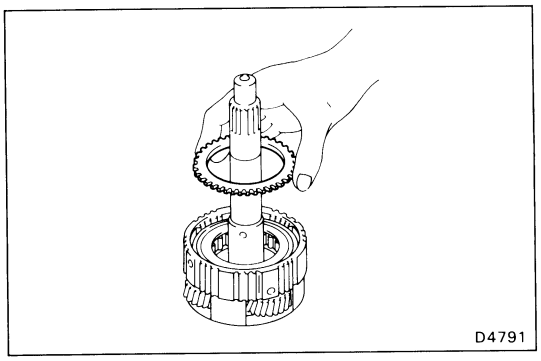

(b) Remove the retaining plate.

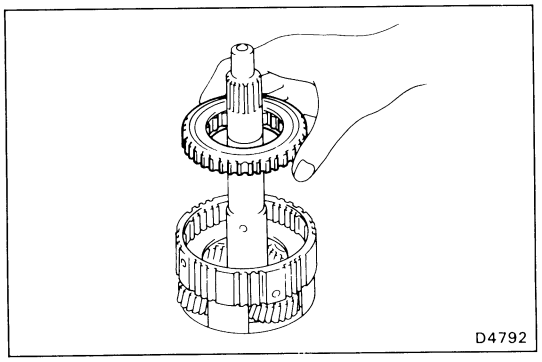

9. REMOVE OVERDRIVE ONE-WAY CLUTCH WITH OUTER RACE

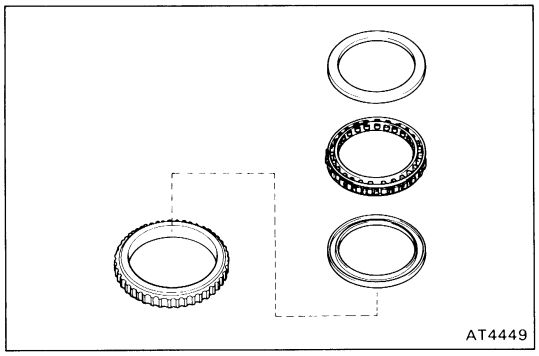

10. REMOVE ONE-WAY CLUTCH FROM OUTER RACE

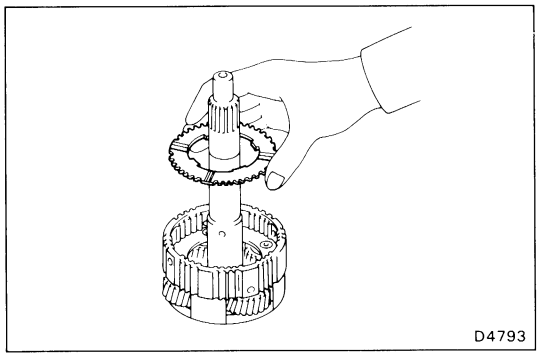

11. REMOVE THRUST WASHER

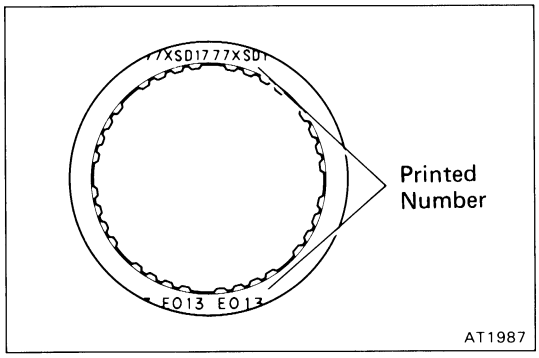

INSPECTION OF OVERDRIVE PLANETARY GEAR AND OVERDRIVE DIRECT CLUTCH

1. INSPECT DISC, PLATE AND FLANGE

Check to see if the sliding surface of the disc, plate and flange are worn or burnt. If necessary, replace them.

HINT:

- If the lining of the disc is peeling off or discolored, or even if part of the printed numbers are defaced, replace all discs.
- Before assembling new discs, soak them in ATF for at least two hours.

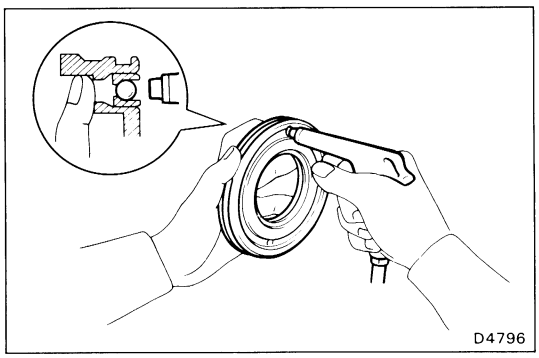

2. CHECK OVERDRIVE DIRECT CLUTCH PISTON

(a) Check that check ball is free by shaking the piston.

(b) Check that the valve does not leak by applying low-pressure compressed air.

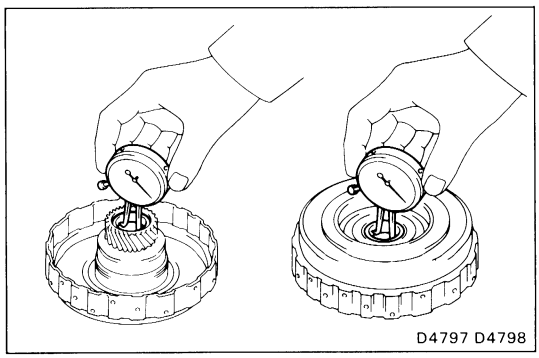

3. CHECK OVERDRIVE DIRECT CLUTCH DRUM BUSHINGS

Using a dial indicator, measure the inside diameter of the clutch drum bushings.

Maximum inside diameter: 27.11 mm (1.0673 in.)

If the inside diameter is greater than the maximum, replace the clutch drum.

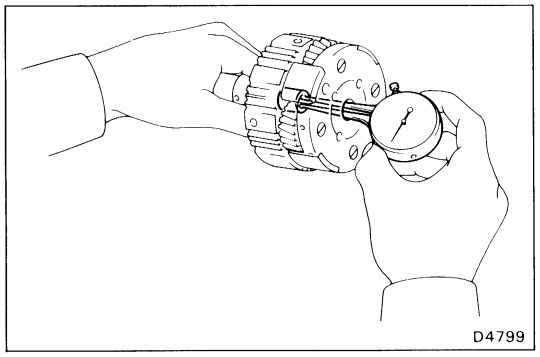

4. **CHECK OVERDRIVE PLANETARY GEAR BUSHING**

Using a dial indicator, measure the inside diameter of the planetary gear bushing.

Maximum inside diameter: 11.27 mm (0.4437 in.)

If the inside diameter is greater than the maximum, replace the planetary gear.

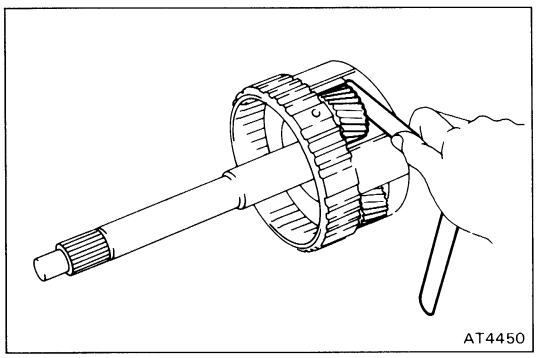

5. **MEASURE PLANETARY PINION GEAR THRUST CLEARANCE**

Using a feeler gauge, measure the planetary pinion gear thrust clearance.

Standard clearance: 0.20 – 0.60 mm (0.0079 – 0.0236 in.)

Maximum clearance: 1.00 mm (0.0394 in.)

If the clearance is greater than the maximum, replace the planetary gear assembly.

ASSEMBLY OF OVERDRIVE PLANETARY GEAR, OVERDRIVE DIRECT CLUTCH AND OVERDRIVE ONE-WAY CLUTCH

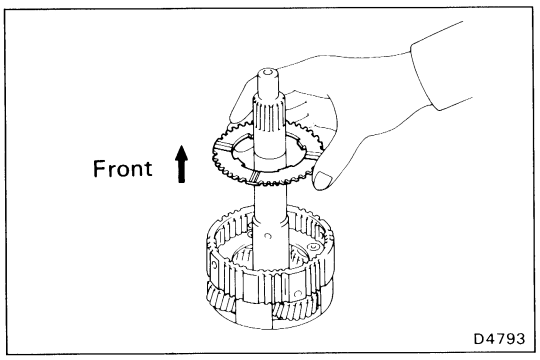

1. **INSTALL THRUST WASHER TO OVERDRIVE PLANETARY GEAR**

Install the thrust washer to the overdrive planetary gear, the grooved side facing upward.

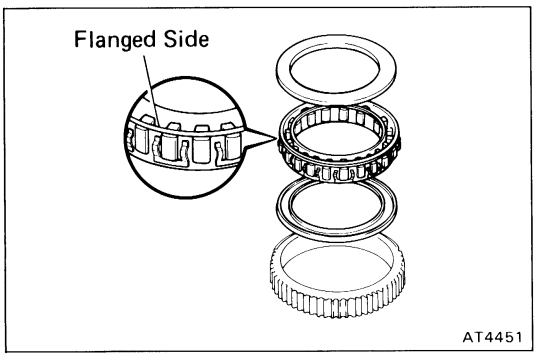

2. **INSTALL OVERDRIVE ONE-WAY CLUTCH**

(a) Install the one-way clutch into the outer race, the flanged side of the one-way clutch facing upward.

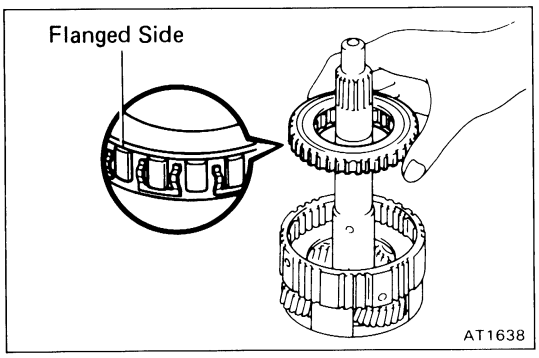

(b) Install the overdrive one-way clutch with the outer race to the overdrive planetary gear.

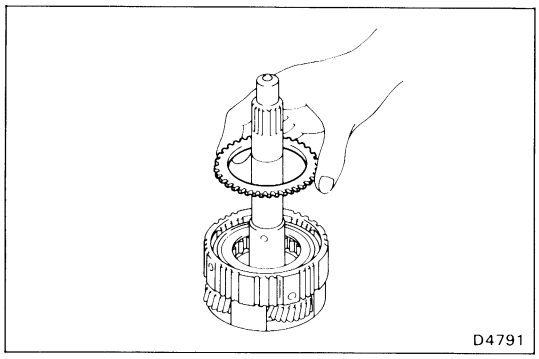

3. INSTALL RETAINING PLATE

(a) Install the retaining plate.

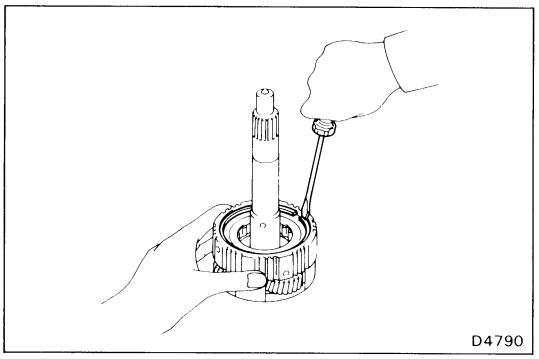

(b) Install the snap ring.

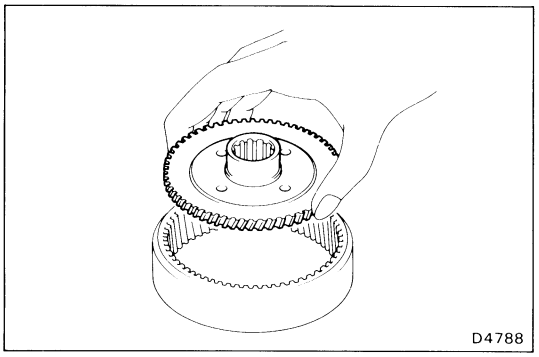

4. INSTALL RING GEAR FLANGE TO OVERDRIVE PLANETARY RING GEAR

(a) Install the ring gear flange as shown.

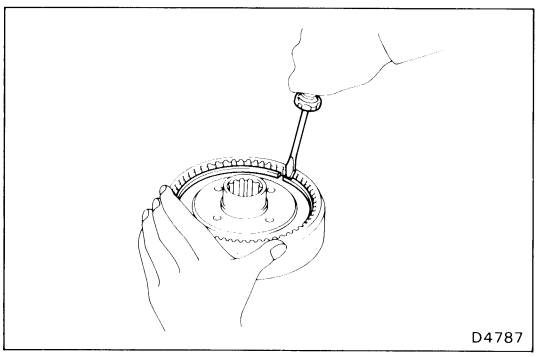

(b) Install the snap ring.

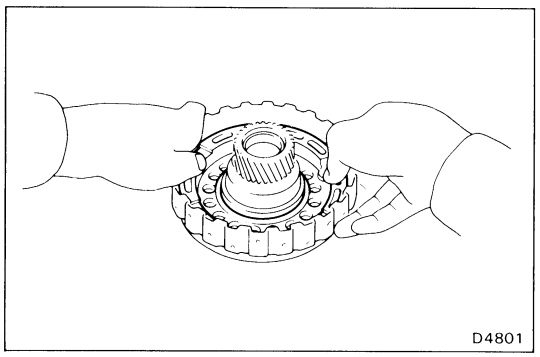

5. INSTALL OVERDRIVE DIRECT CLUTCH PISTON

(a) Coat new O-rings with ATF and install them on the O/D direct clutch piston.

(b) Being careful not to damage the O-rings, press in the direct clutch piston into the clutch drum with both hands.

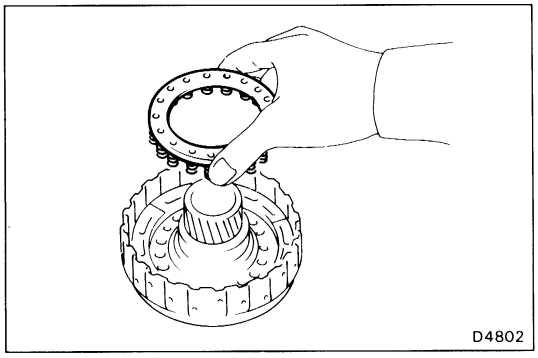

6. INSTALL PISTON RETURN SPRING

(a) Install the piston return spring to the piston.

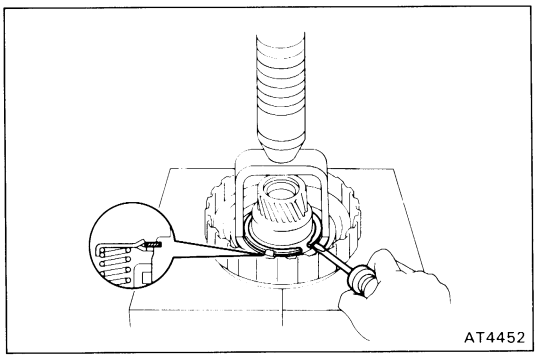

(b) Place SST on the spring retainer, and compress the return spring with a shop press.

SST 09350-30020 (09350-07040)

(c) Install the snap ring with a screwdriver. Be sure the end gap of the snap ring is not aligned with the spring retainer claw.

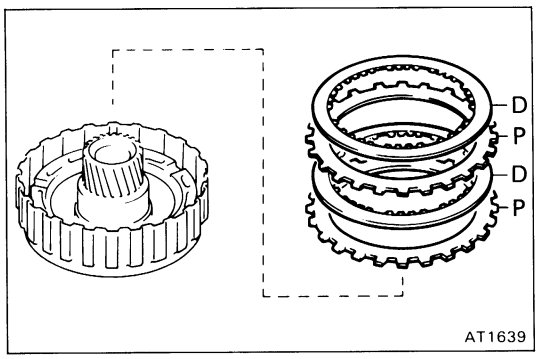

7. INSTALL PLATES, DISCS AND FLANGE

(a) Install the plates and discs.

Install in order: P = Plate D = Disc
P — D — P — D

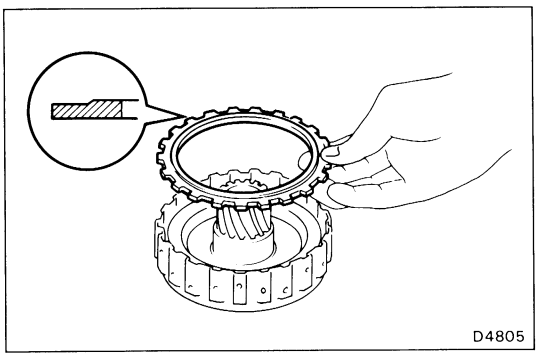

(b) Install the flange, the flat end facing downward.

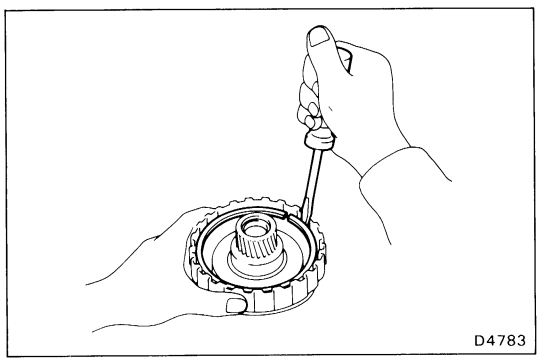

(c) Install the snap ring.

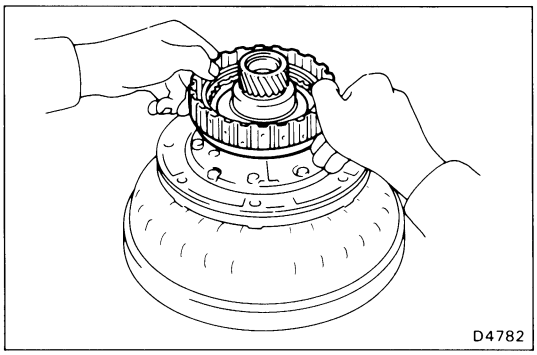

8. CHECK PISTON STROKE OF OVERDRIVE DIRECT CLUTCH

(a) Place the oil pump onto the torque converter, and then place the O/D direct clutch assembly onto the oil pump.

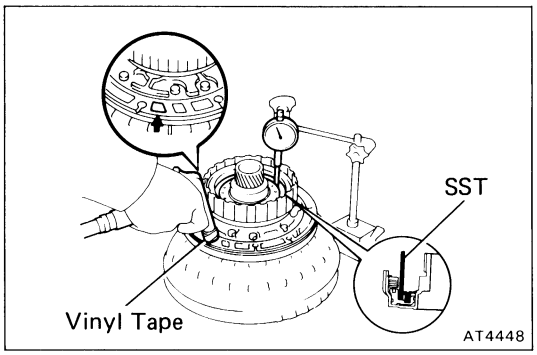

(b) Using SST and a dial indicator, measure the overdrive direct clutch piston stroke applying and releasing the compressed air (4 — 8 kg/cm², 57 — 114 psi or 392 — 785 kPa) as shown.

SST 09350-30020 (09350-06120)

Piston stroke: 1.85 — 2.15 mm (0.0728 — 0.0846 in.)

If the piston stroke is less than the limit, parts may be misassembled and reinstall them.

If the piston stroke is nonstandard, select another flange.

NOTE: There are six different thicknesses for the flange.

Flange thickness mm (in.)

No.	Thickness	No.	Thickness
16	3.6 (0.142)	19	3.3 (0.130)
17	3.5 (0.138)	20	3.2 (0.126)
18	3.4 (0.134)	21	3.1 (0.122)

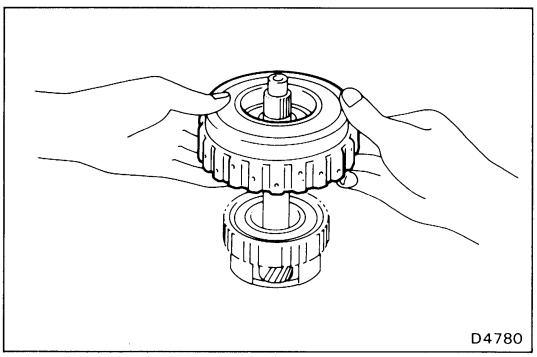

9. INSTALL OVERDRIVE DIRECT CLUTCH ASSEMBLY

(a) Align the flukes of discs in the direct clutch.

(b) Install the direct clutch assembly onto the O/D planetary gear.

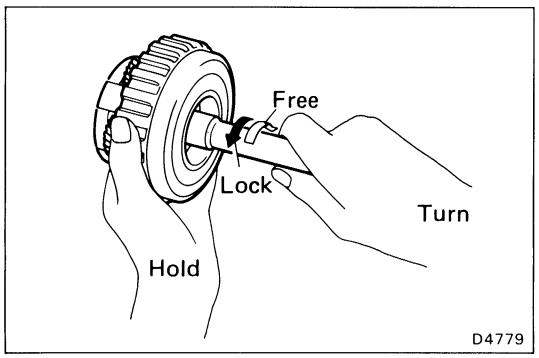

10. CHECK OPERATION OF ONE-WAY CLUTCH

Hold the O/D direct clutch drum and turn the input shaft. The input shaft turns freely clockwise and locks counterclockwise.

Overdrive Brake

COMPONENTS

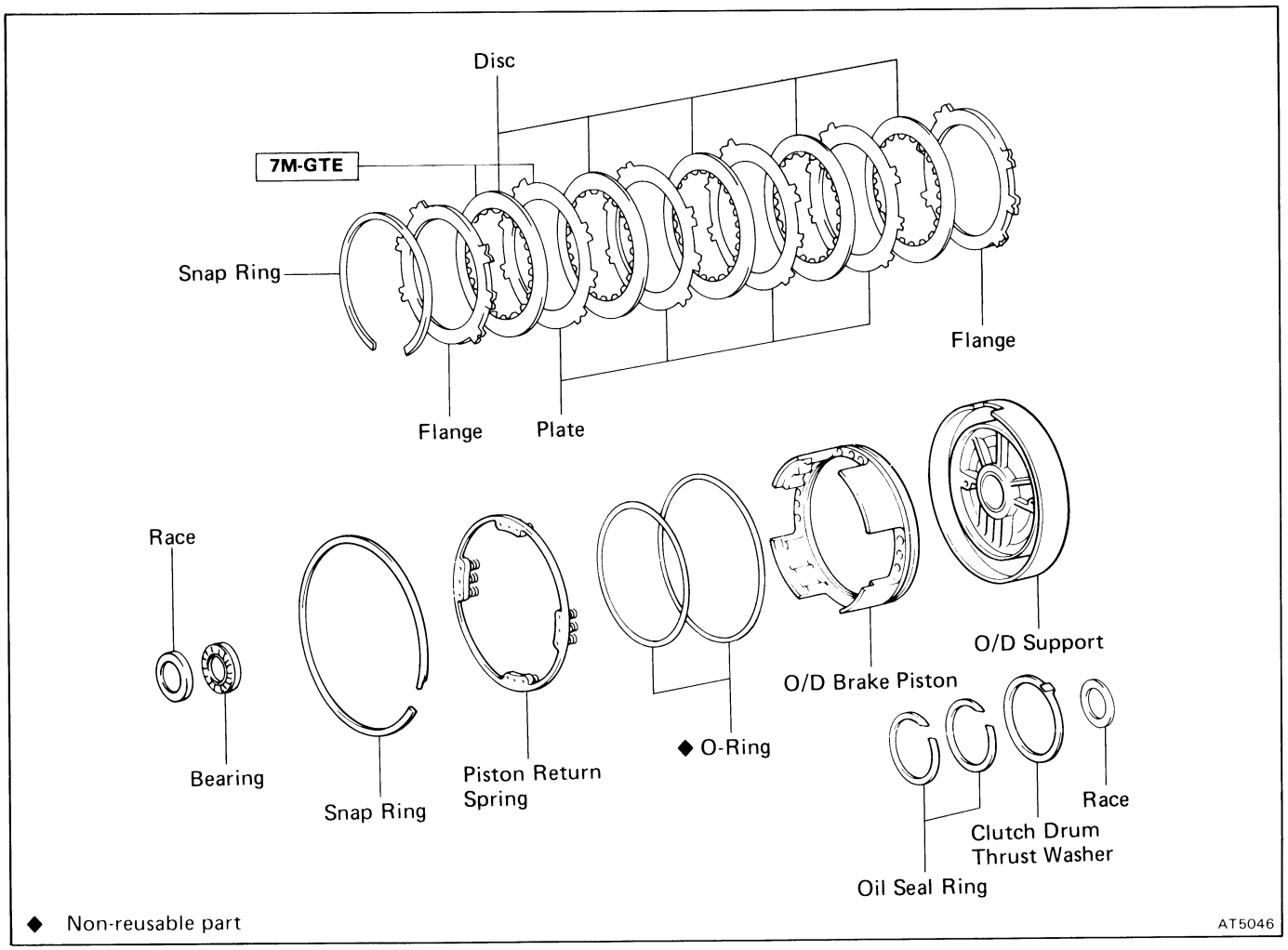

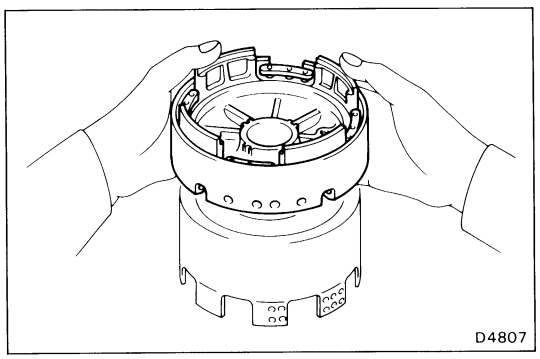

DISASSEMBLY OF OVERDRIVE BRAKE

1. CHECK OVERDRIVE BRAKE PISTON MOVING

(a) Place the O/D support assembly onto the direct clutch assembly.

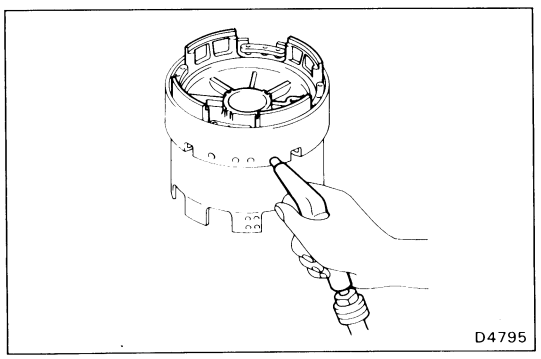

(b) Apply compressed air into the oil passage as shown, and be sure that the O/D brake piston moves smoothly.

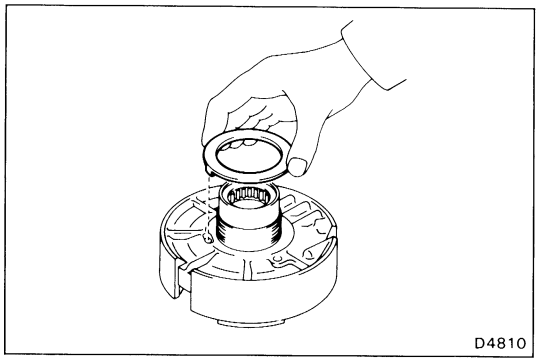

2. REMOVE CLUTCH DRUM THRUST WASHER FROM OVERDRIVE SUPPORT

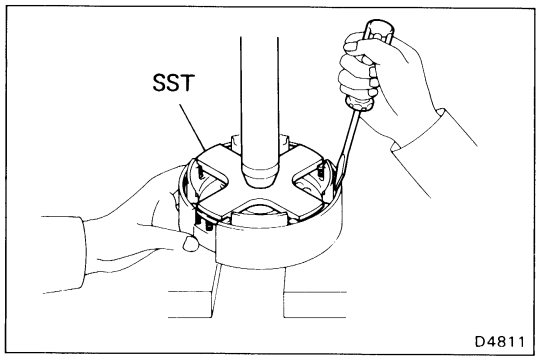

3. REMOVE PISTON RETURN SPRING

(a) Place SST on the spring retainer, and compress the return spring with a shop press.

SST 09350-30020 (09350-07030)

(b) Remove the snap ring with a screwdriver.

(c) Remove the piston return spring.

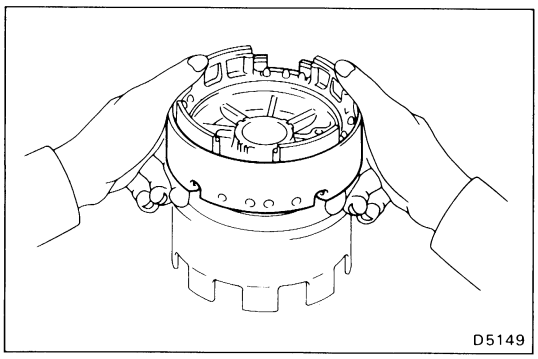

4. REMOVE OVERDRIVE BRAKE PISTON

(a) Place the O/D support onto the direct clutch assembly.

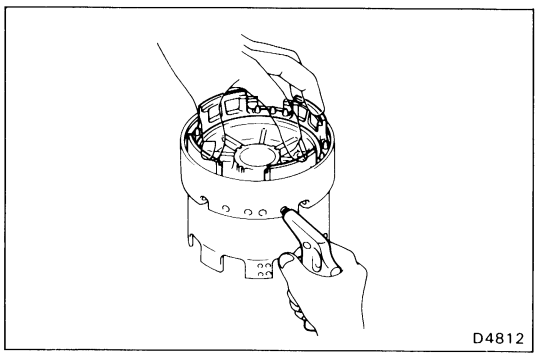

(b) Hold the O/D brake piston so it does not slant and apply compressed air into the passage to remove the O/D brake piston.

(c) Remove the O/D brake piston.

(d) Remove the two O-rings from the piston.

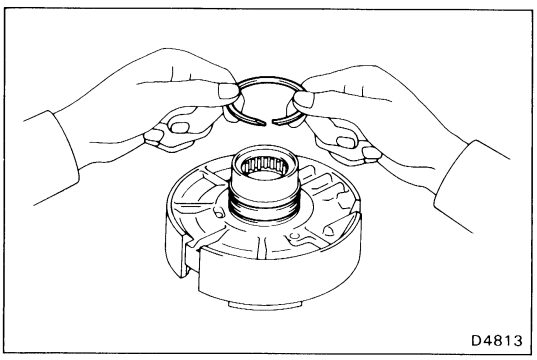

5. REMOVE OIL SEAL RINGS

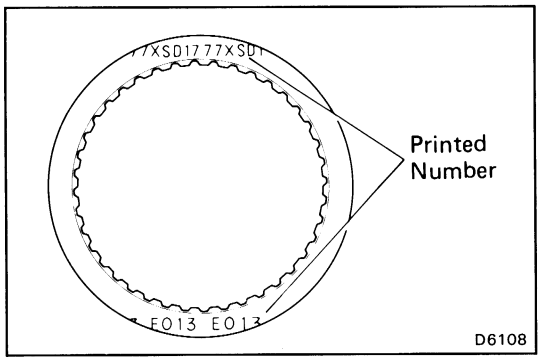

INSPECTION OF OVERDRIVE BRAKE

INSPECT DISC, PLATE AND FLANGE

Check to see if the sliding surface of the disc, plate and flange are worn or burnt. If necessary, replace them.

HINT:

- If the lining of the disc is peeling off or discolored, or even if parts of the printed numbers are defaced, replace all discs.
- Before assembling new discs, soak them in ATF for at least two hours.

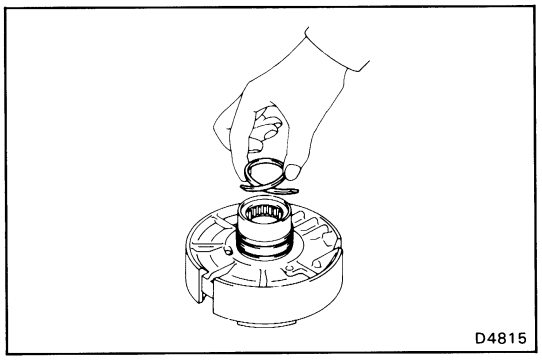

ASSEMBLY OF OVERDRIVE BRAKE

1. INSTALL OIL SEAL RINGS

(a) Coat the two oil seal rings with ATF.

(b) Contract the oil seal rings as shown, and install them onto the O/D support.

NOTICE: Do not spread the ring ends more than necessary.

HINT: After installing the oil seal rings, check that they rotate smoothly.

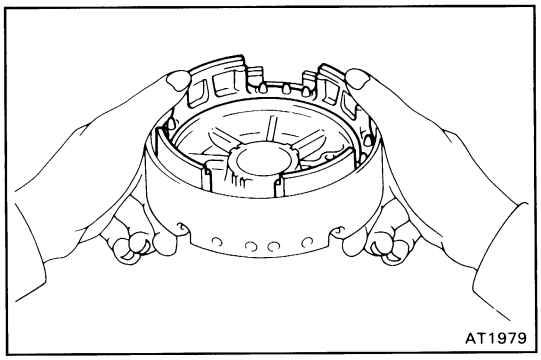

2. INSTALL OVERDRIVE BRAKE PISTON

(a) Coat two new O-rings with ATF and install them on the O/D brake piston.

(b) Being careful not to damage the O-rings, press in the brake piston into the O/D support with both hands.

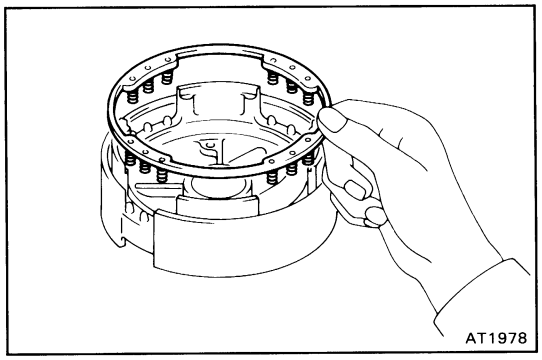

3. INSTALL PISTON RETURN SPRING

(a) Install the piston return spring.

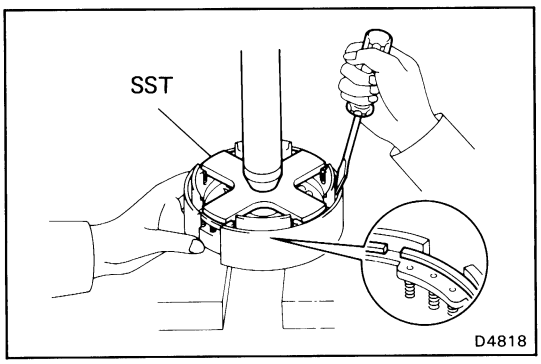

(b) Place SST on the spring retainer, and compress the return spring with a shop press.

SST 09350-30020 (09350-07030)

(c) Install the snap ring with a screwdriver. Be sure the end gap of the snap ring is not aligned with the cutout portion of the O/D support.

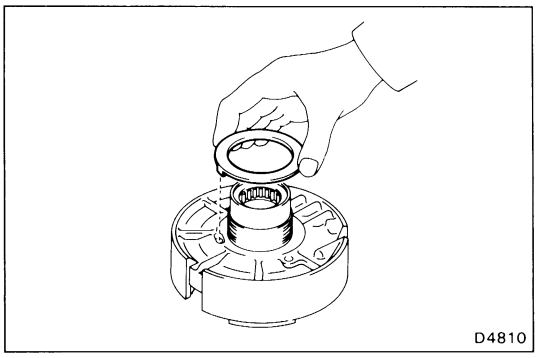

4. INSTALL CLUTCH DRUM THRUST WASHER

Coat the thrust washer with petroleum jelly and install it onto the O/D support.

HINT: Make sure that the lug shape matches the hole on the O/D support.

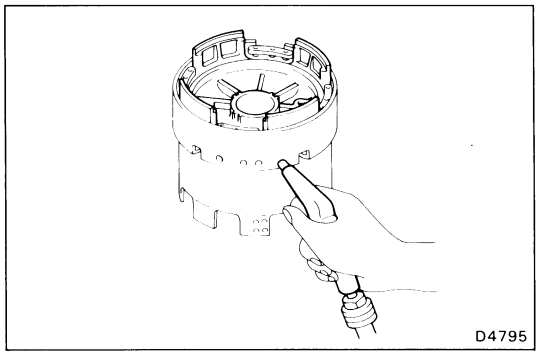

5. CHECK OVERDRIVE BRAKE PISTON MOVING

(a) Place the O/D support assembly onto the direct clutch assembly.

(b) Apply compressed air into the oil passage as shown, and be sure that the O/D brake piston moves smoothly.

Direct Clutch

COMPONENTS

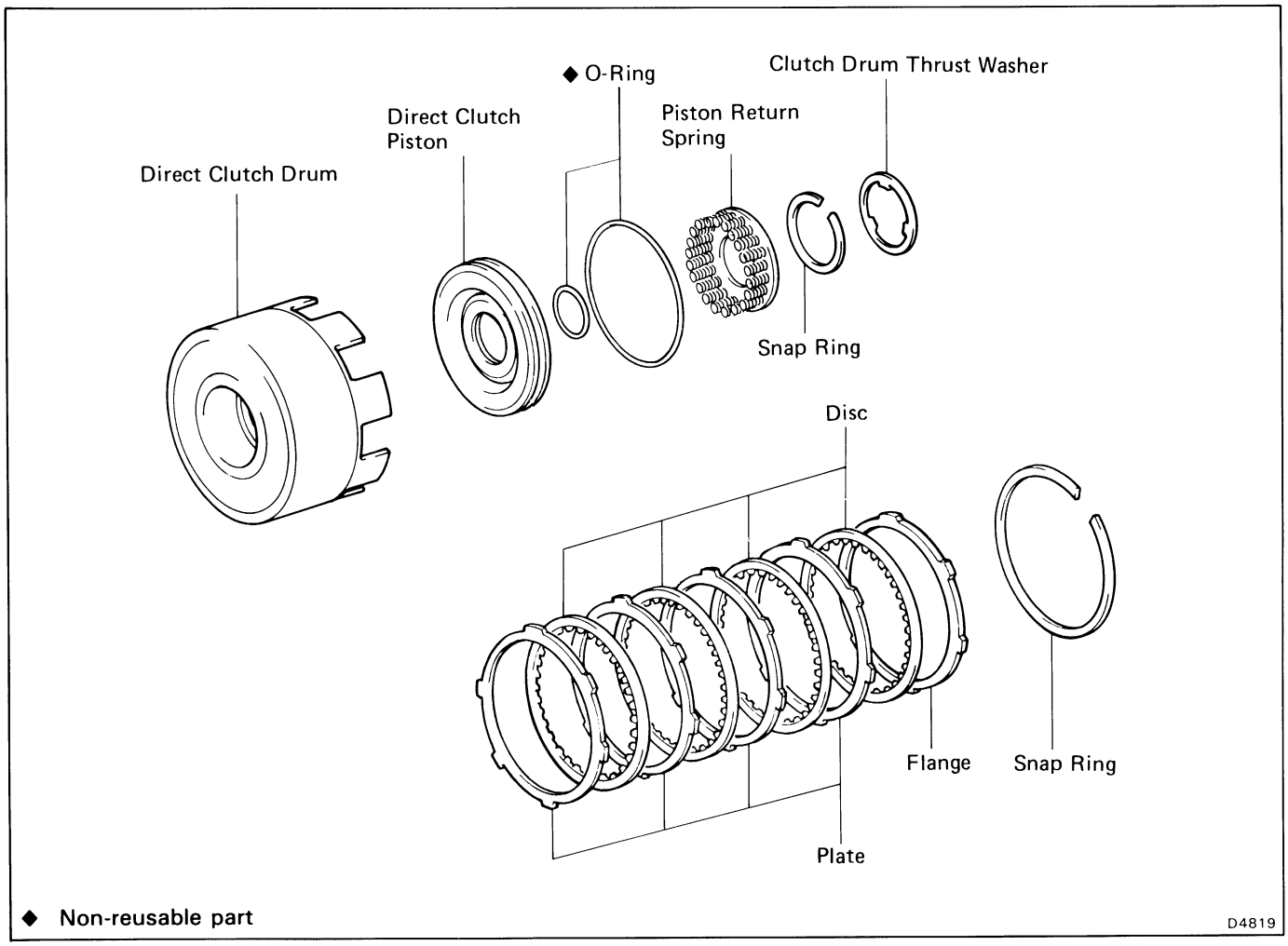

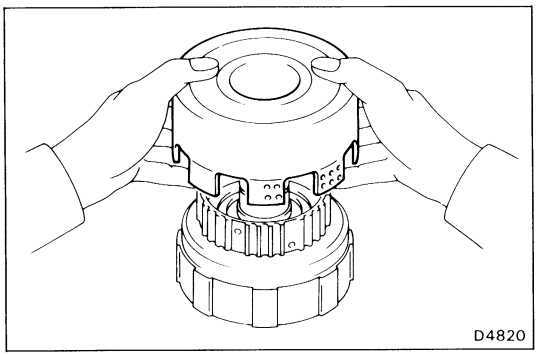

DISASSEMBLY OF DIRECT CLUTCH

1. **REMOVE DIRECT CLUTCH DRUM ASSEMBLY FROM FORWARD CLUTCH ASSEMBLY**

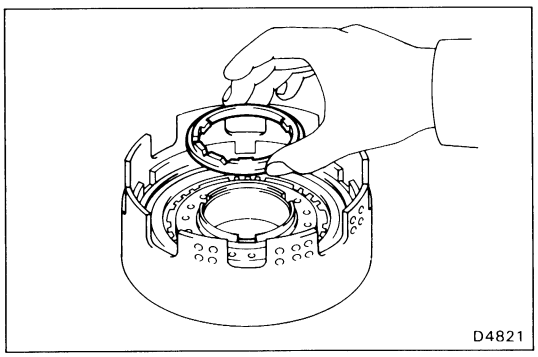

2. **REMOVE CLUTCH DRUM THRUST WASHER FROM DIRECT CLUTCH ASSEMBLY**

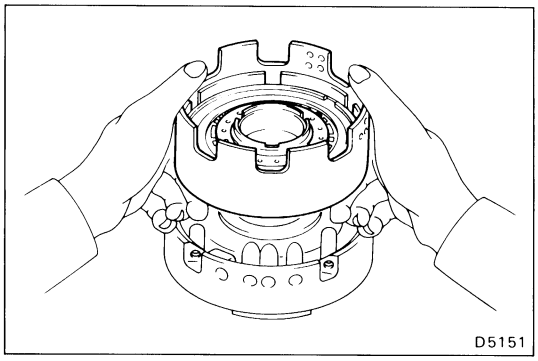

3. CHECK PISTON STROKE OF DIRECT CLUTCH

(a) Place the direct clutch assembly onto the O/D support assembly.

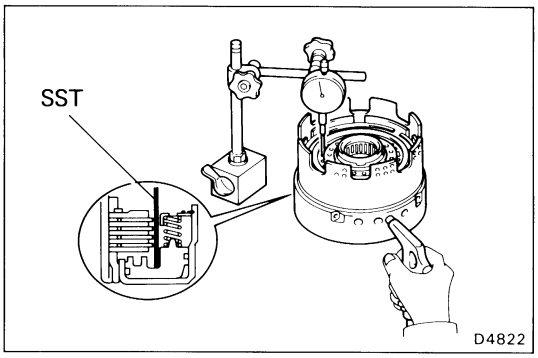

(b) Using SST and a dial indicator, measure the direct clutch piston stroke applying and releasing the compressed air (4 — 8 kg/cm², 57 — 114 psi or 392 — 785 kPa) as shown.

SST 09350-30020 (09350-06120)

Piston stroke: 1.37 — 1.60 mm (0.0539 — 0.0630 in.)

If the values are nonstandard, inspect the discs.

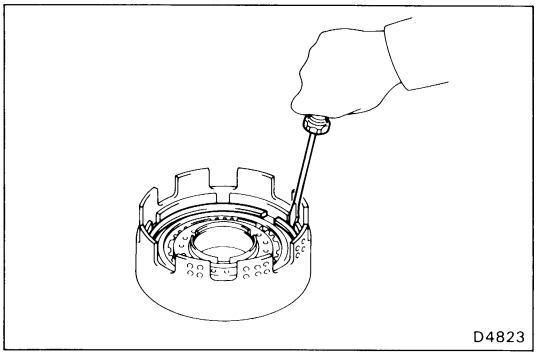

4. REMOVE FLANGE, PLATES AND DISCS

(a) Remove the snap ring from the direct clutch drum.

(b) Remove the flange, four plates and four discs.

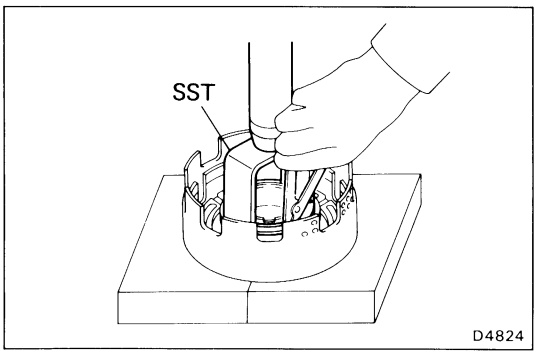

5. REMOVE PISTON RETURN SPRING

(a) Place SST on the spring retainer and compress the return spring with a shop press.

SST 09350-30020 (09350-07040)

(b) Using snap ring pliers, remove the snap ring.

(c) Remove the piston return spring.

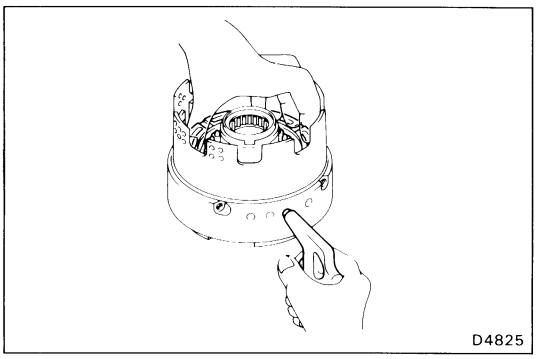

6. REMOVE DIRECT CLUTCH PISTON

(a) Place the direct clutch drum onto the O/D support.

(b) Hold the direct clutch piston with hand, apply compressed air to the O/D support to remove the direct clutch piston.

(c) Remove the direct clutch piston.

(d) Remove the two O-rings from the piston.

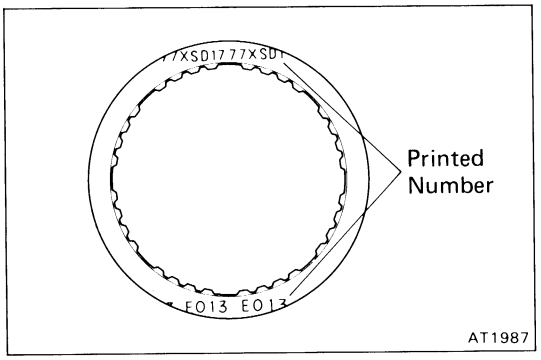

INSPECTION OF DIRECT CLUTCH

1. INSPECT DISC, PLATE AND FLANGE

Check to see if the sliding surface of the disc, plate and flange are worn or burnt. If necessary, replace them.

HINT:

- If the lining of the disc is peeling off or discolored, or even if parts of the printed numbers are defaced, replace all discs.
- Before assembling new discs, soak them in ATF for at least two hours.

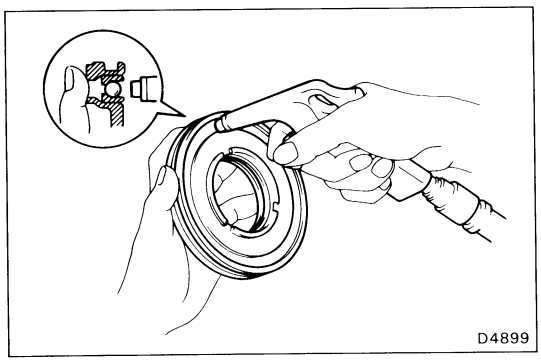

2. CHECK DIRECT CLUTCH PISTON

(a) Check that check ball is free by shaking the piston.

(b) Check that the valve does not leak by applying low-pressure compressed air.

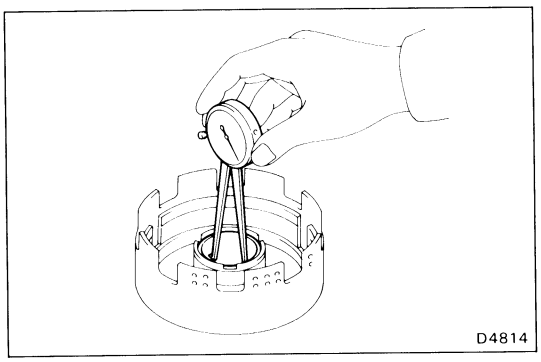

3. CHECK DIRECT CLUTCH DRUM BUSHING

Using a dial indicator, measure the inside diameter of the clutch drum bushing.

Maximum inside diameter: 53.99 mm (2.1256 in.)

If the inside diameter is greater than the maximum, replace the clutch drum.

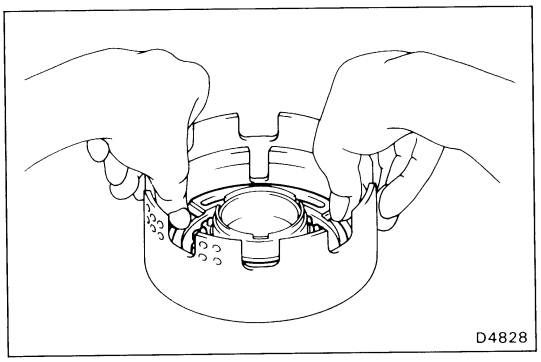

ASSEMBLY OF DIRECT CLUTCH

1. INSTALL DIRECT CLUTCH PISTON TO DIRECT CLUTCH DRUM

(a) Coat new O-rings with ATF and install them on the direct clutch piston.

(b) Being careful not to damage the O-rings, press in the direct clutch piston into the clutch drum with both hands.

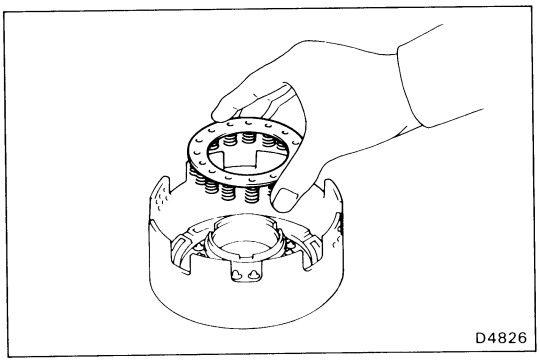

2. INSTALL PISTON RETURN SPRING

(a) Install the piston return spring.

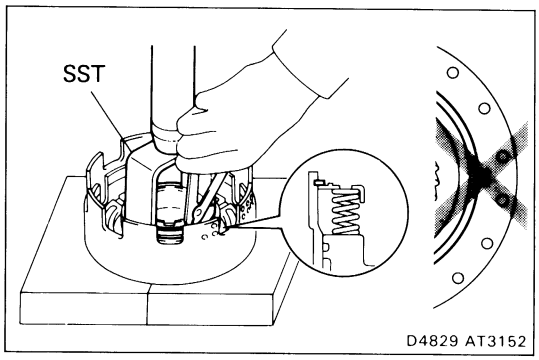

(b) Place SST on the spring retainer, and compress the return spring with a shop press.

SST 09350-30020 (09350-07040)

(c) Install the snap ring with snap ring pliers. Be sure the end gap of the snap ring is not aligned with the spring retainer claw.

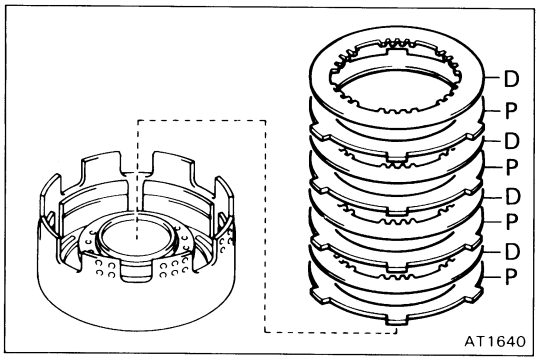

3. INSTALL PLATES, DISCS AND FLANGE

(a) Install the plates and discs.

Install in order: P = Plate D = Disc
P — D — P — D — P — D — P — D

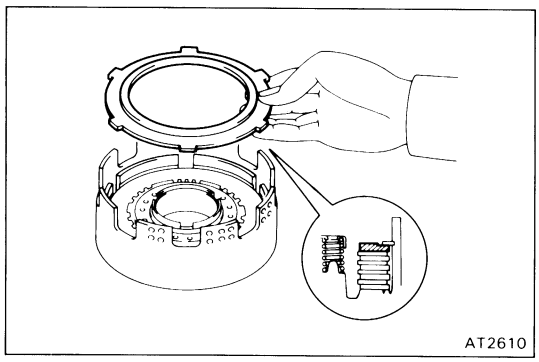

(b) Install the flange, the flat end facing downward.

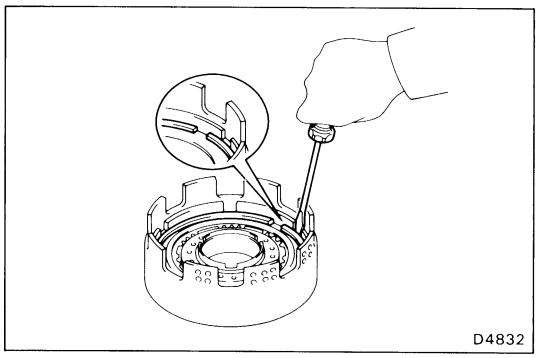

(c) Install the snap ring with a screwdriver. Be sure the end gap of the snap ring is not aligned with the cutout portion of the direct clutch drum.

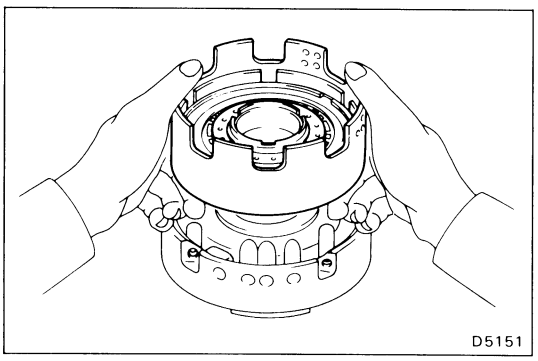

4. CHECK PISTON STROKE OF DIRECT CLUTCH

(a) Place the direct clutch assembly onto the O/D support assembly.

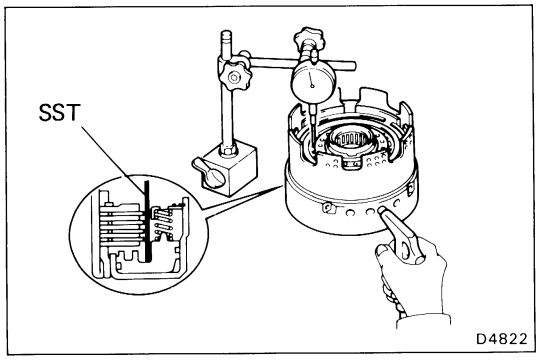

(b) Using SST and a dial indicator, measure the direct clutch piston stroke applying and releasing the compressed air (4 — 8 kg/cm², 57 — 114 psi or 392 — 785 kPa) as shown.

SST 09350-30020 (09350-06120)

Piston stroke: 1.37 — 1.60 mm (0.0539 — 0.0630 in.)

If the piston stroke is less than the limit, parts may have been assembled incorrectly, check and reassemble again.

If the piston stroke is nonstandard, select another flange.

HINT: There are eight different thicknesses for the flange.

Flange thickness mm (in.)

No.	Thickness	No.	Thickness
33	3.0 (0.118)	29	3.4 (0.134)
32	3.1 (0.122)	28	3.5 (0.138)
31	3.2 (0.126)	27	3.6 (0.142)
30	3.3 (0.130)	34	3.7 (0.146)

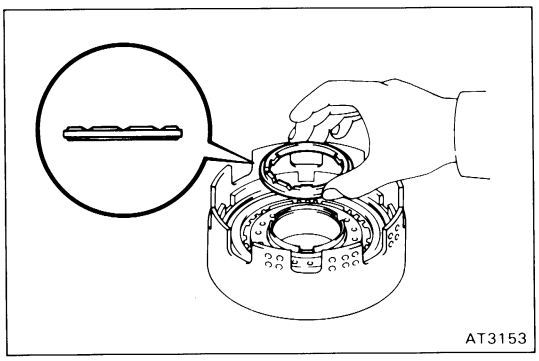

5. INSTALL CLUTCH DRUM THRUST WASHER

Coat the thrust washer with petroleum jelly and install it onto the direct clutch.

HINT: Make sure that the lug shapes match the cutout portions on the direct clutch.

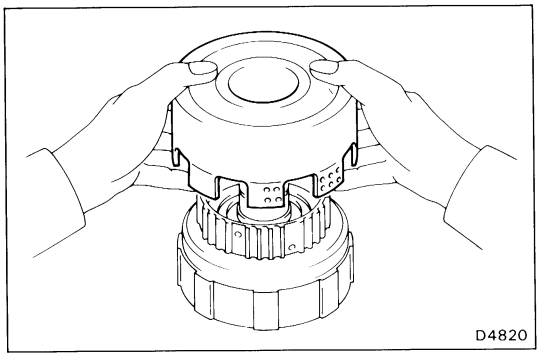

6. INSTALL DIRECT CLUTCH ASSEMBLY TO FORWARD CLUTCH ASSEMBLY

(a) Align the flukes of discs in the direct clutch.

(b) Install the direct clutch assembly onto the forward clutch assembly.

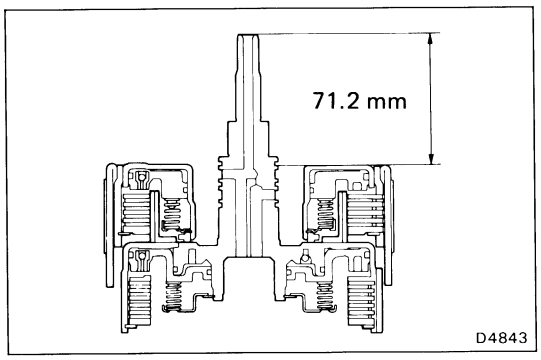

(c) Check that the distance from the direct clutch end to the forward clutch end is 71.2 mm (2.803 in.).

If the distance is less than the above value, parts may have been assembled incorrectly, check and reassemble again.

Forward Clutch

COMPONENTS

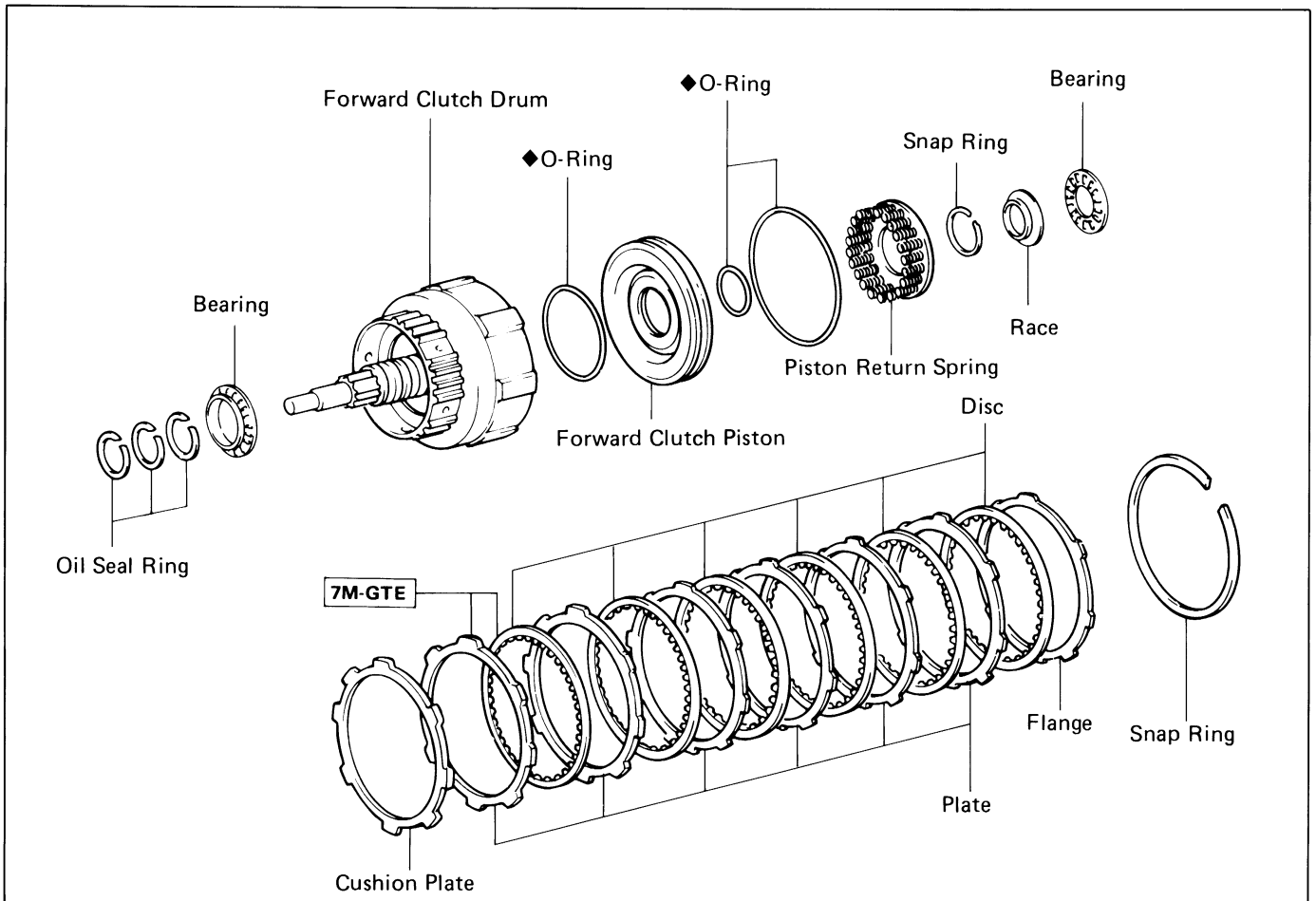

◆ Non-reusable part

AT2345

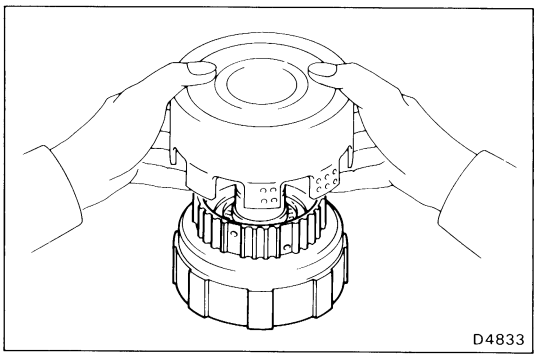

D4833

DISASSEMBLY OF FORWARD CLUTCH

1. REMOVE FORWARD CLUTCH ASSEMBLY FROM DIRECT CLUTCH ASSEMBLY

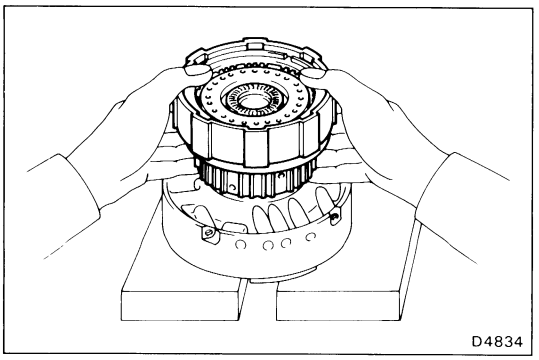

D4834

2. PLACE FORWARD CLUTCH ONTO OVERDRIVE SUPPORT

(a) Place wooden blocks, etc. to prevent forward clutch shaft from touching the work stand, and place the O/D support on them.

(b) Place the forward clutch onto the O/D support.

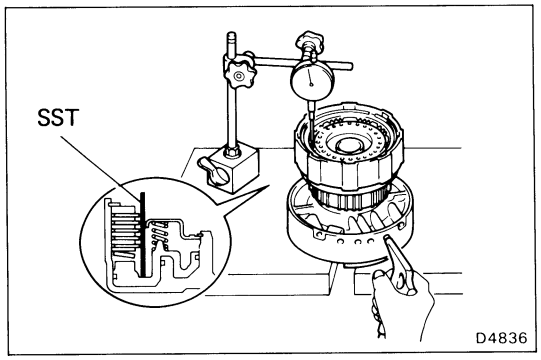

3. CHECK PISTON STROKE OF FORWARD CLUTCH

Using SST and a dial indicator, measure the forward clutch piston stroke applying and releasing the compressed air (4 — 8 kg/cm², 57 — 114 psi or 392 — 785 kPa) as shown.

SST 09350-30020 (09350-06120)

Piston stroke:

7M-GE 3.42 — 3.93 mm (0.1346 — 0.1547 in.)
7M-GTE 3.73 — 4.59 mm (0.1469 — 0.1807 in.)

If the values are nonstandard, inspect the discs.

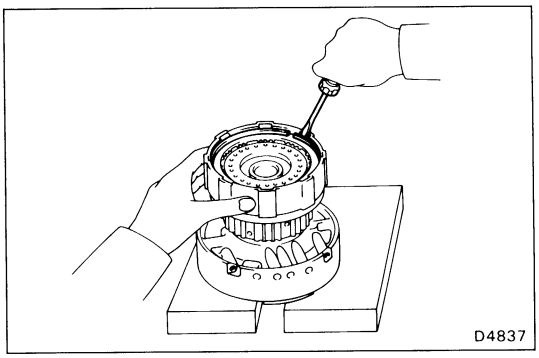

4. REMOVE FLANGE, PLATES AND DISCS

(a) Remove the snap ring from the forward clutch drum.

(b) Remove the flange, plates and discs.

7M-GE: One flange, five plates and five discs
7M-GTE: One flange, six plates and six discs

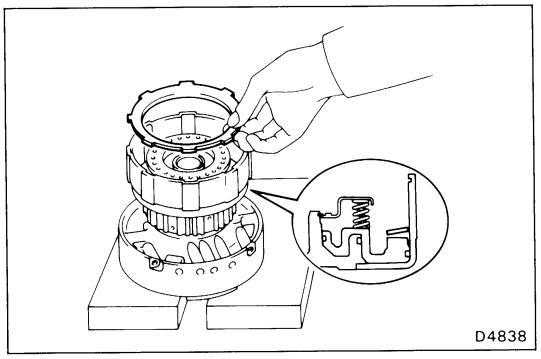

5. REMOVE CUSHION PLATE

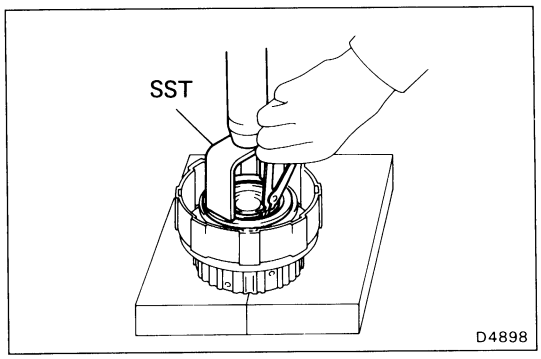

6. REMOVE PISTON RETURN SPRING

(a) Place SST on the spring retainer and compress the return spring with a shop press.

SST 09350-30020 (09350-07040)

(b) Using snap ring pliers, remove the snap ring.

(c) Remove the piston return spring.

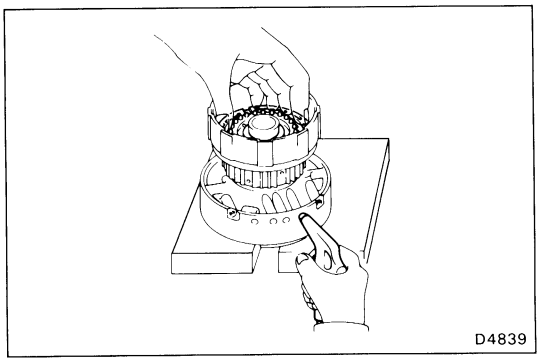

7. REMOVE FORWARD CLUTCH PISTON

(a) Place the forward clutch drum onto the O/D support.

(b) Hold the forward clutch piston with hand, apply compressed air to the O/D support to remove the forward clutch piston.

(c) Remove the forward clutch piston.

(d) Remove the two O-rings from the piston.

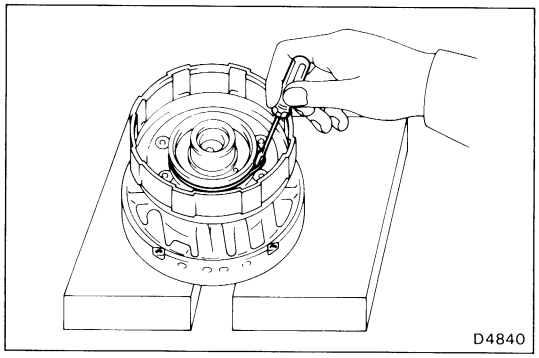

8. REMOVE O-RING FROM FORWARD CLUTCH DRUM

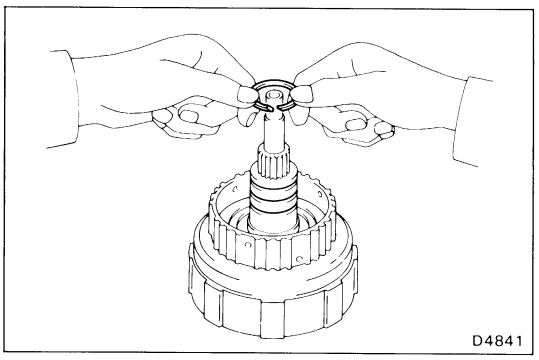

9. REMOVE OIL SEAL RINGS

INSPECTION OF FORWARD CLUTCH

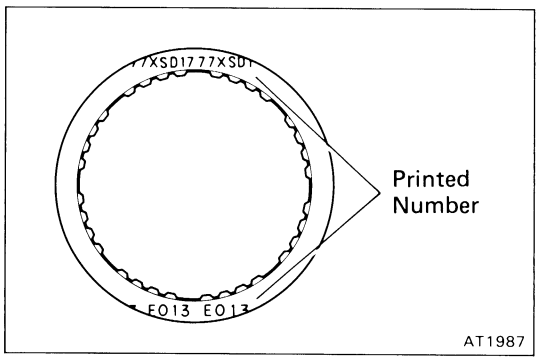

1. INSPECT DISC, PLATE AND FLANGE

Check to see if the sliding surface of the disc, plate and flange are worn or burnt. If necessary, replace them.

HINT:

- If the lining of the disc is peeling off or discolored, or even if part of the printed numbers are defaced, replace all discs.
- Before assembling new discs, soak them in ATF for at least two hours.

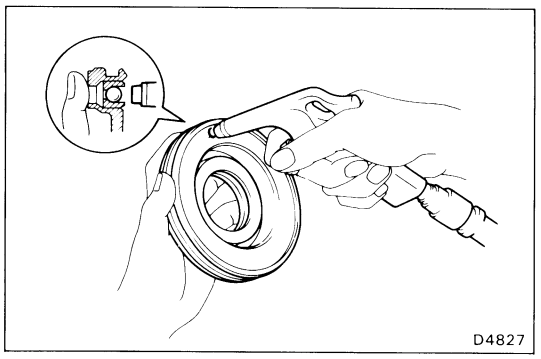

2. CHECK FORWARD CLUTCH PISTON

(a) Check that check ball is free by shaking the piston.

(b) Check that the valve does not leak by applying low-pressure compressed air.

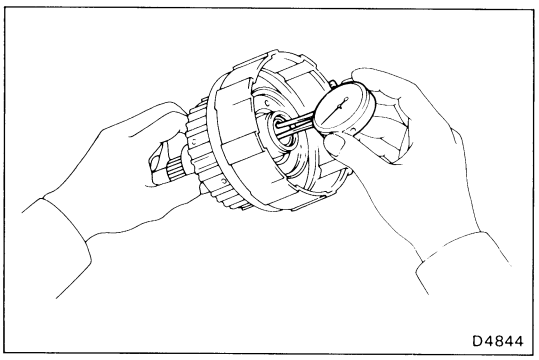

3. CHECK FORWARD CLUTCH DRUM BUSHING

Using a dial indicator, measure the inside diameter of the forward clutch drum bushing.

Maximum inside diameter: 24.08 mm (0.9480 in.)

If the inside diameter is greater than the maximum, replace the forward clutch drum.

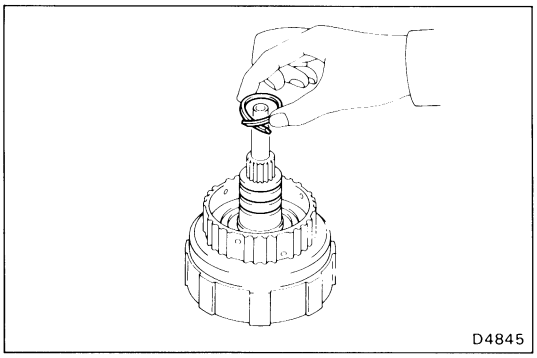

ASSEMBLY OF FORWARD CLUTCH

1. INSTALL OIL SEAL RINGS

(a) Coat the three oil seal rings with ATF.

(b) Contract the oil seal rings as shown, and install them onto the forward clutch drum.

NOTICE: Do not spread the ring ends more than necessary.

HINT: After installing the oil seal rings, check that they rotate smoothly.

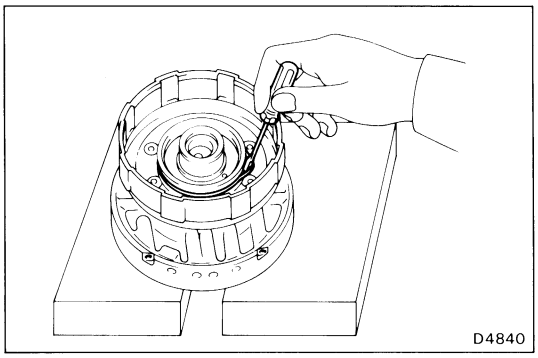

2. INSTALL NEW O-RING TO FORWARD CLUTCH DRUM

Coat a new O-ring with ATF and install it on the forward clutch drum.

3. INSTALL FORWARD CLUTCH PISTON

(a) Coat new O-rings with ATF and install them on the forward clutch piston.

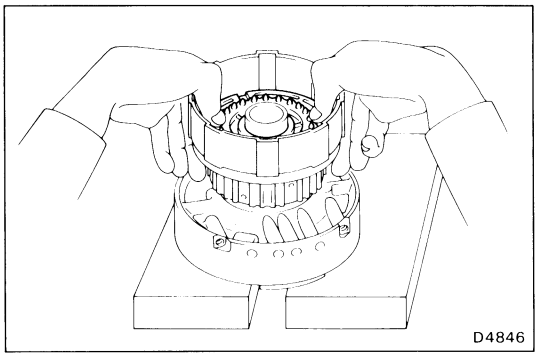

(b) Being careful not to damage the O-rings, press the clutch piston into the forward clutch drum with both hands.

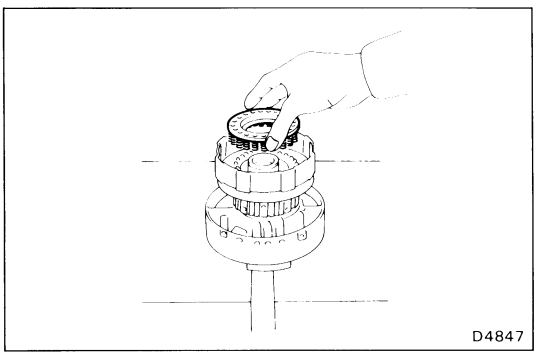

4. INSTALL PISTON RETURN SPRING

(a) Install the piston return spring.

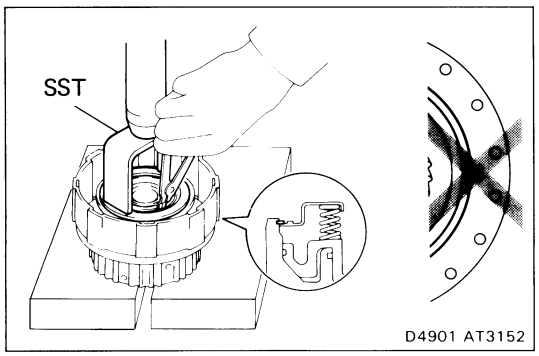

(b) Place SST on the spring retainer, and compress the return spring with a shop press.

SST 09350-30020 (09350-07040)

(c) Install the snap ring with snap ring pliers. Be sure the end gap of the snap ring is not aligned with the spring retainer claw.

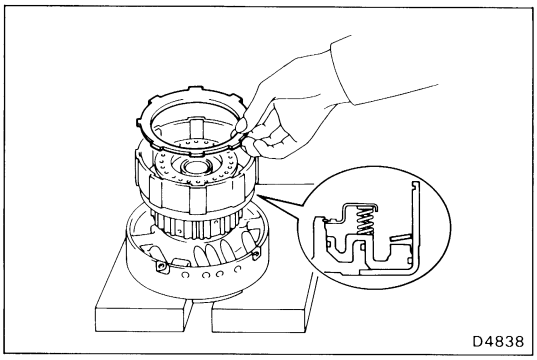

5. INSTALL CUSHION PLATE ROUNDED END DOWN AS SHOWN

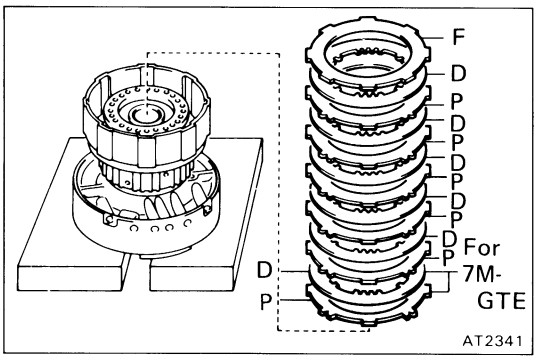

6. INSTALL PLATES, DISCS AND FLANGE

(a) Install in order: P = Plate D = Disc
7M-GE: P—D—P—D—P—D—P—D—P—D
7M-GTE: P—D—P—D—P—D—P—D—P—D—P—D

(b) And then install the flange, the rounded edge facing downward.

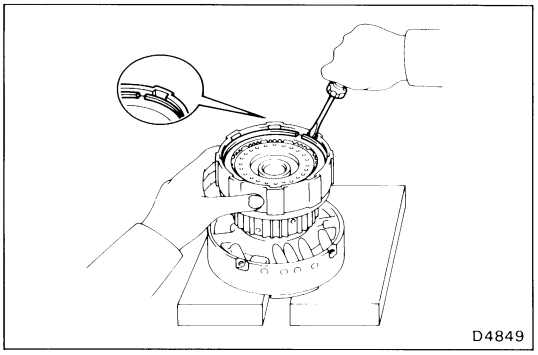

(c) Install the snap ring with a screwdriver. Be sure the end gap of the snap ring is not aligned with the cutout portion of the forward clutch drum.

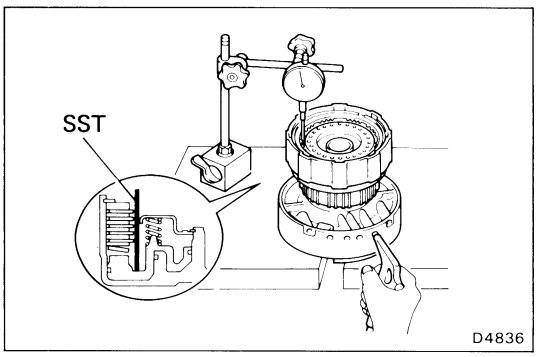

7. CHECK PISTON STROKE OF FORWARD CLUTCH

Using SST and a dial indicator, measure the forward clutch piston stroke applying and releasing the compressed air (4 — 8 kg/cm², 57 — 114 psi or 392 — 785 kPa) as shown.

SST 09350-30020 (09350-06120)

Piston stroke:

7M-GE 3.42 — 3.93 mm (0.1346 — 0.1547 in.)
7M-GTE 3.73 — 4.59 mm (0.1469 — 0.1807 in.)

If the piston stroke is less than the limit, parts may have been assembled incorrectly, check and reassemble again.

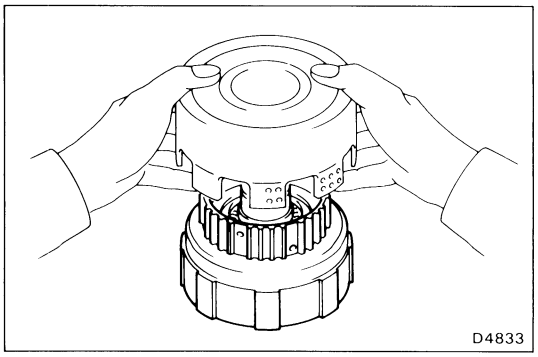

8. INSTALL DIRECT CLUTCH ASSEMBLY TO FORWARD CLUTCH ASSEMBLY

(a) Make sure that the thrust washer is installed to the direct clutch drum.

(b) Align the flukes of discs in the direct clutch.

(c) Install the direct clutch assembly onto the forward clutch assembly.

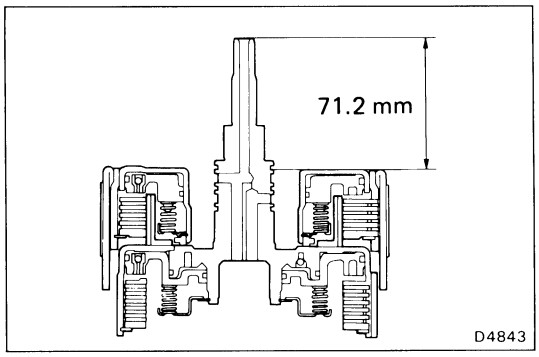

(d) Check that the distance from the direct clutch end to the forward clutch end is 71.2 mm (2.803 in.).

If the distance is less than the above value, parts may have been assembled incorrectly, check and reassemble again.

Second Coast Brake

COMPONENTS

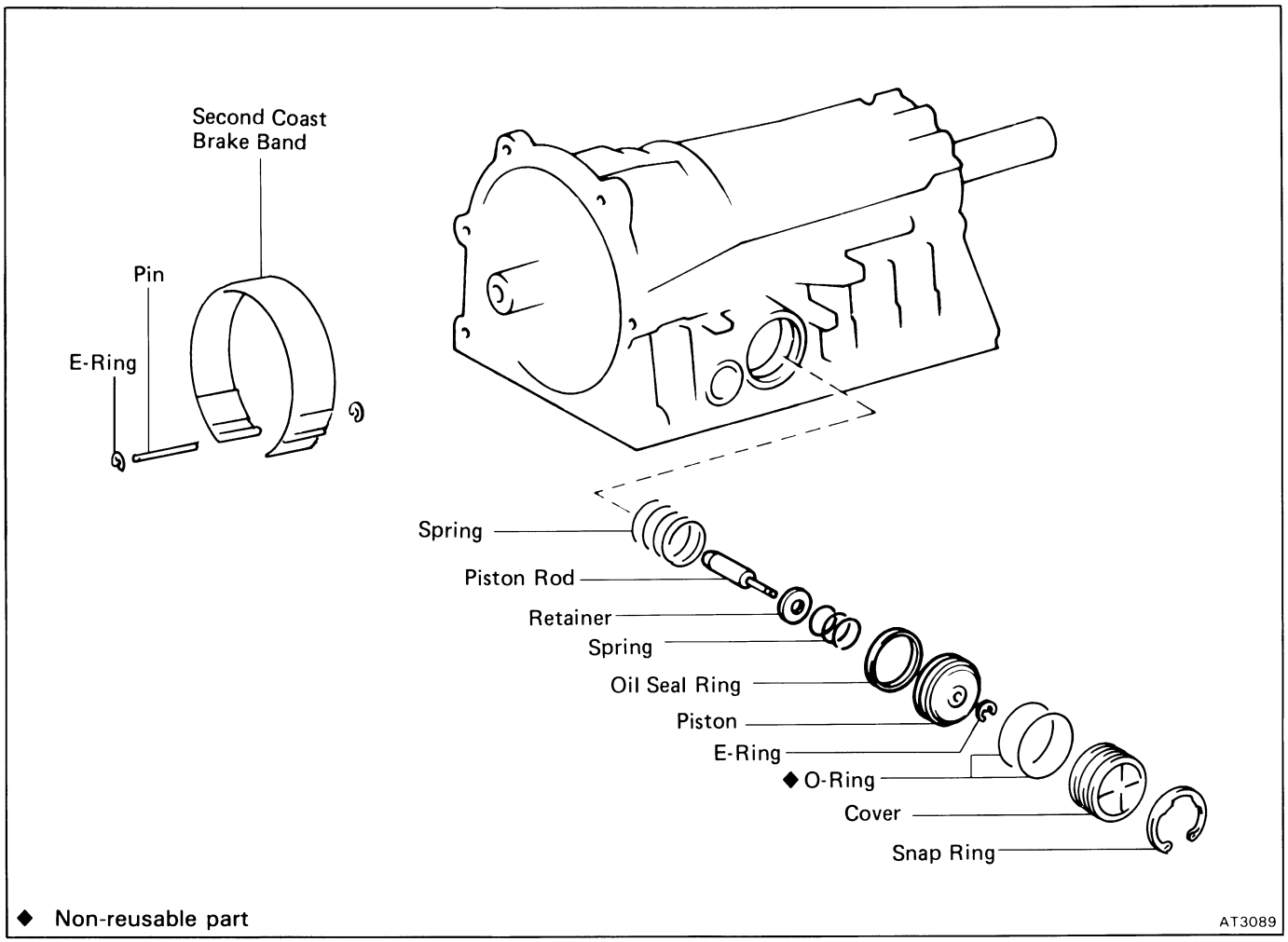

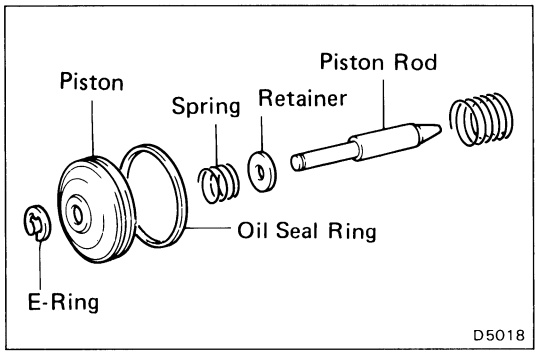

DISASSEMBLY OF SECOND COAST BRAKE PISTON

DISASSEMBLE SECOND COAST BRAKE PISTON

(a) Remove the E-ring.

(b) Remove the piston, spring and retainer from the piston rod.

(c) Remove the oil seal ring form the piston.

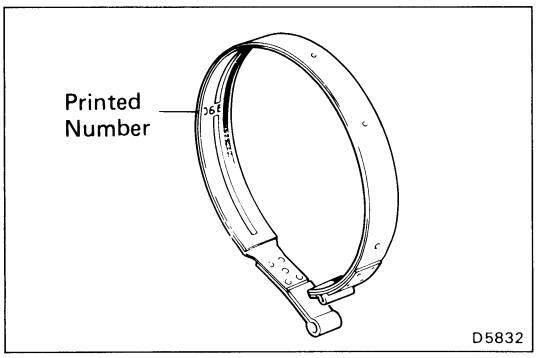

INSPECTION OF SECOND COAST BRAKE BAND

INSPECT BRAKE BAND

If the lining of the brake band is peeling off or discolored, or even if parts of the printed numbers are defaced, replace the brake band.

HINT: Before assembling new band, soak it in ATF for at least two hours.

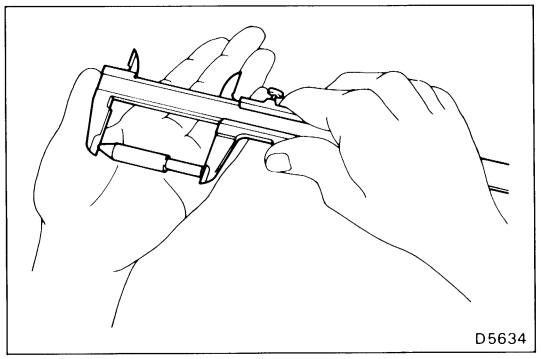

ASSEMBLY OF SECOND COAST BRAKE PISTON

1. SELECT PISTON ROD

If the band is OK with piston rod stroke not within the standard value, select the piston rod.

There are two different lengths for piston rod.

Piston rod length: 71.4 mm (2.811 in.)
72.9 mm (2.870 in.)

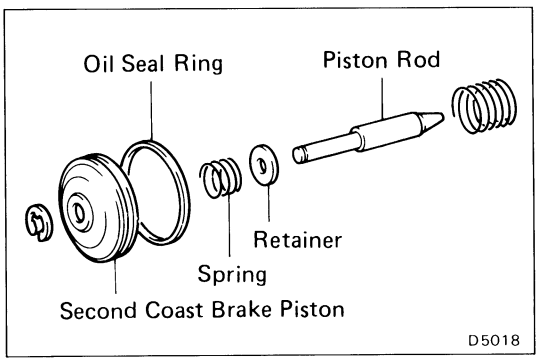

2. ASSEMBLE SECOND COAST BRAKE PISTON

(a) Coat the oil seal ring with ATF and install it to the second coast brake piston.

(b) Install the retainer, spring and piston to the piston rod.

(c) Install the E-ring.

Front Planetary Gear

COMPONENTS

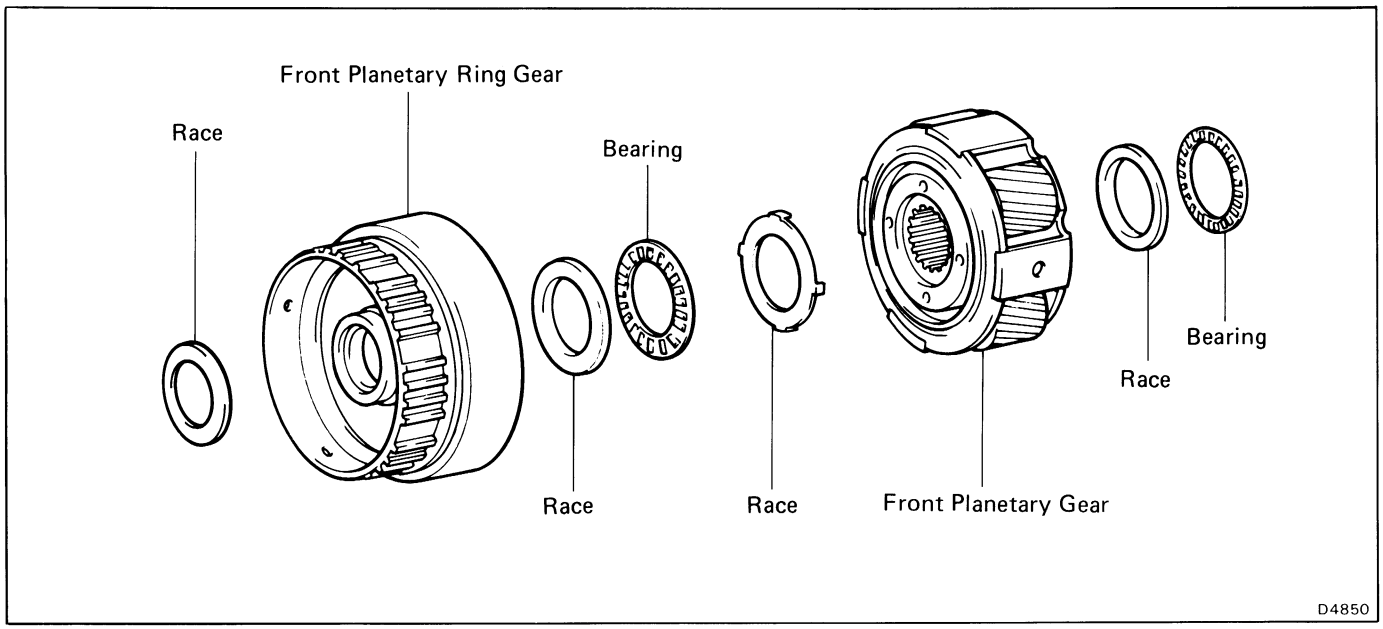

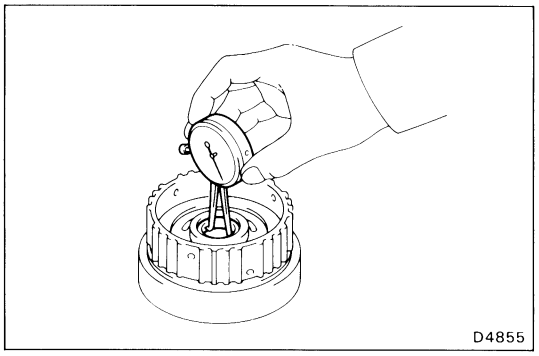

INSPECTION OF FRONT PLANETARY GEAR

1. CHECK FRONT PLANETARY RING GEAR BUSHING

Using a dial indicator, measure the inside diameter of the planetary ring gear bushing.

Maximum inside diameter: 24.08 mm (0.9480 in.)

If the inside diameter is greater than the maximum, replace the planetary ring gear.

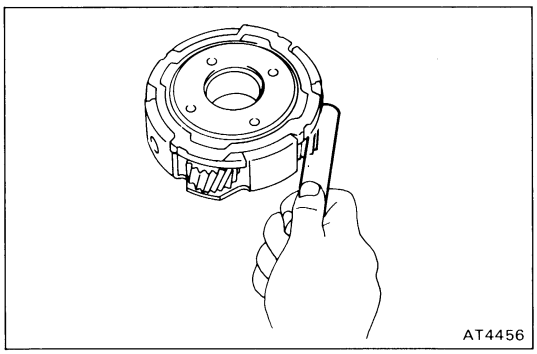

2. MEASURE PLANETARY PINION GEAR THRUST CLEARANCE

Using a feeler gauge, measure the planetary pinion gear thrust clearance.

Standard clearance: 0.20 — 0.60 mm (0.0079 — 0.0236 in.)

Maximum clearance: 1.00 mm (0.0394 in.)

If the clearance is greater than the maximum, replace the planetary gear assembly.

Planetary Sun Gear and No. 1 One-Way Clutch

COMPONENTS

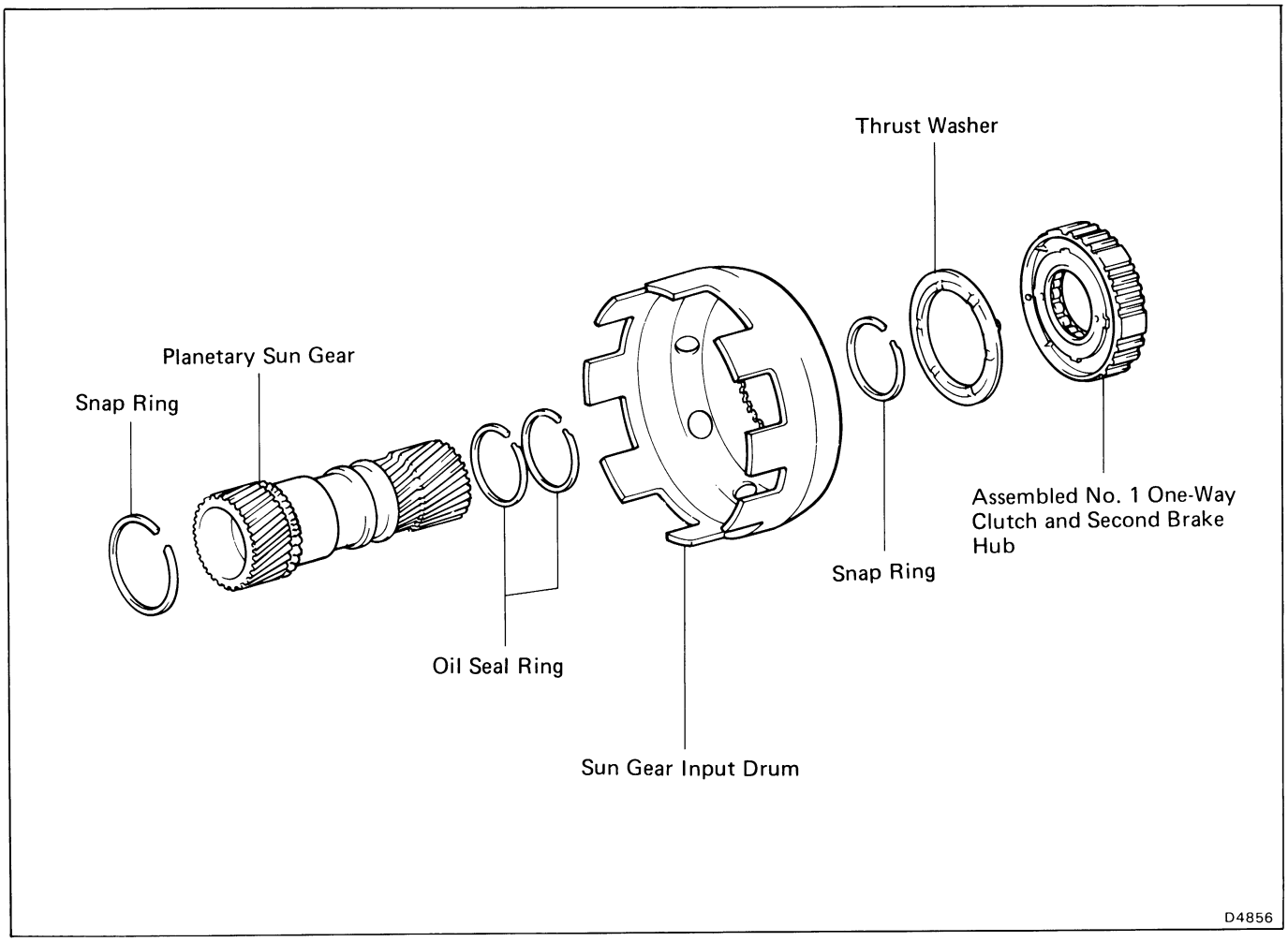

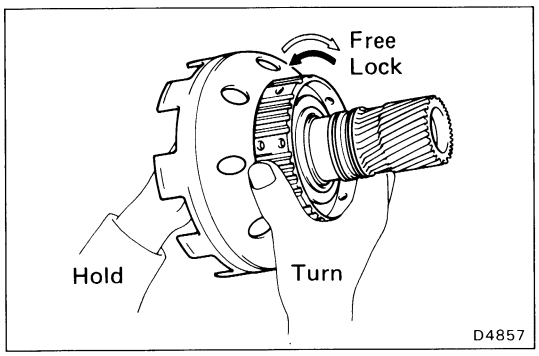

DISASSEMBLY OF PLANETARY SUN GEAR AND NO. 1 ONE-WAY CLUTCH

1. **CHECK OPERATION OF NO. 1 ONE-WAY CLUTCH**

   Hold the planetary sun gear and turn the second brake hub. The second brake hub turns freely clockwise and locks counterclockwise.

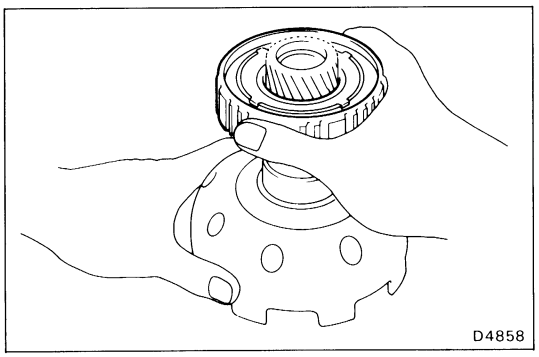

2. **REMOVE ASSEMBLED NO. 1 ONE-WAY CLUTCH AND SECOND BRAKE HUB**

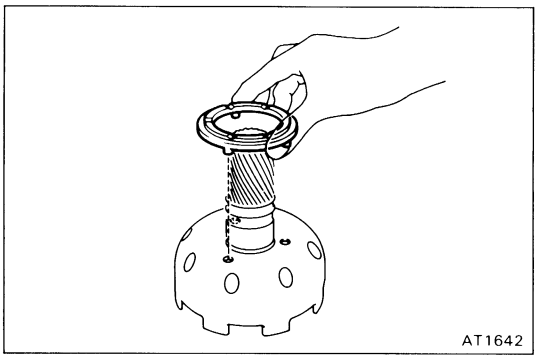

3. REMOVE THRUST WASHER FROM SUN GEAR INPUT DRUM

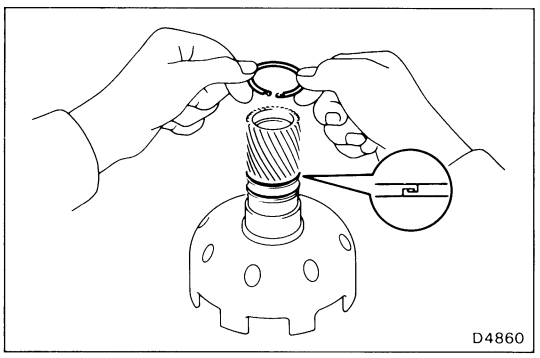

4. REMOVE OIL SEAL RINGS

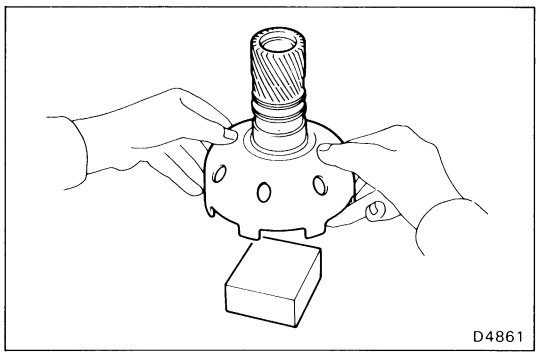

5. REMOVE SUN GEAR INPUT DRUM FROM PLANETARY SUN GEAR

(a) Use a wooden block, etc. as work stand.

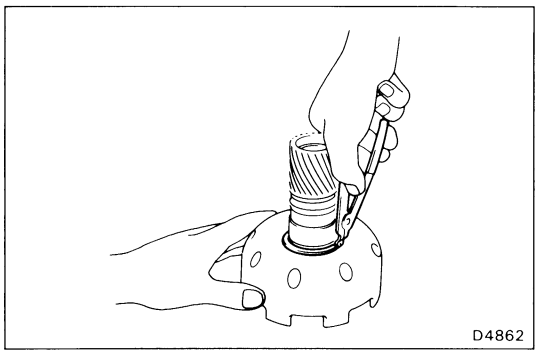

(b) Using snap ring pliers, remove the snap ring.

(c) Remove the sun gear input drum from the planetary sun gear.

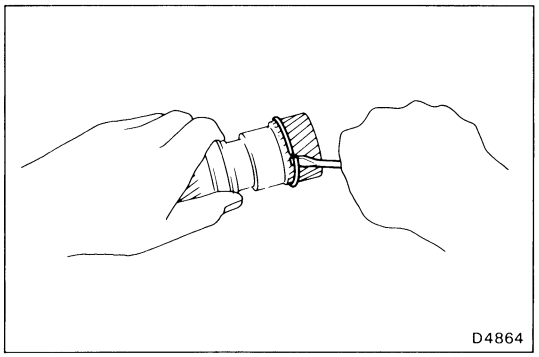

6. REMOVE SNAP RING FROM PLANETARY SUN GEAR

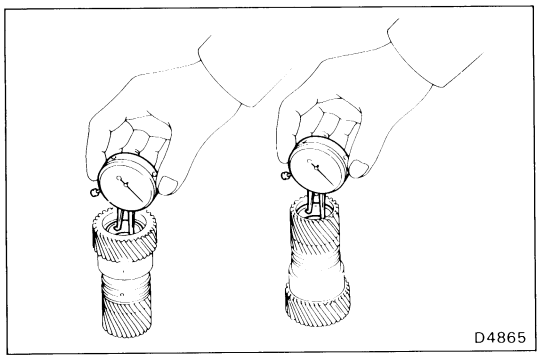

INSPECTION OF PLANETARY SUN GEAR

CHECK PLANETARY SUN GEAR BUSHINGS

Using a dial indicator, measure the inside diameter of the planetary sun gear bushings.

Maximum inside diameter: 27.08 mm (1.0661 in.)

If the inside diameter is greater than the maximum, replace the planetary sun gear.

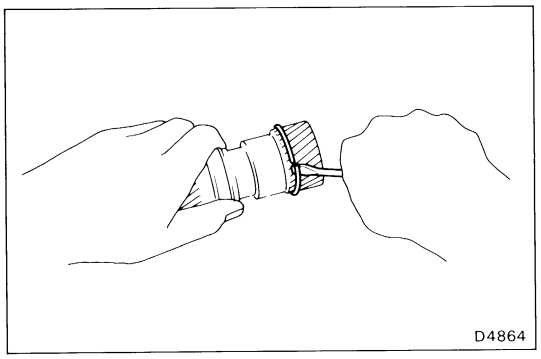

ASSEMBLY OF PLANETARY SUN GEAR AND NO. 1 ONE-WAY CLUTCH

1. INSTALL SNAP RING TO PLANETARY SUN GEAR

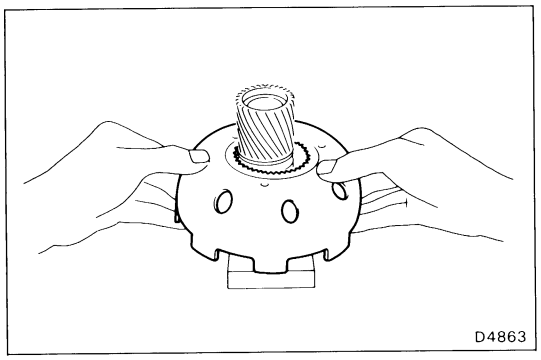

2. INSTALL SUN GEAR INPUT DRUM

(a) Place a wooden block, etc. as a work stand and place the planetary sun gear onto it.

(b) Install the sun gear input drum onto the planetary sun gear.

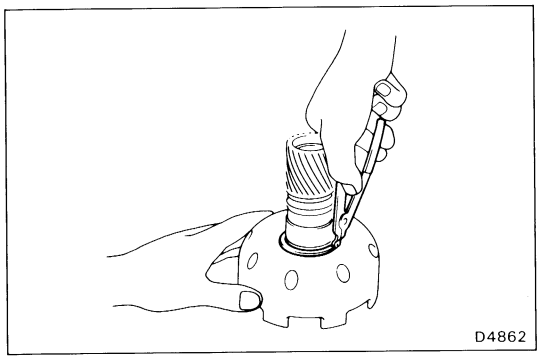

(c) Install the snap ring with snap ring pliers.

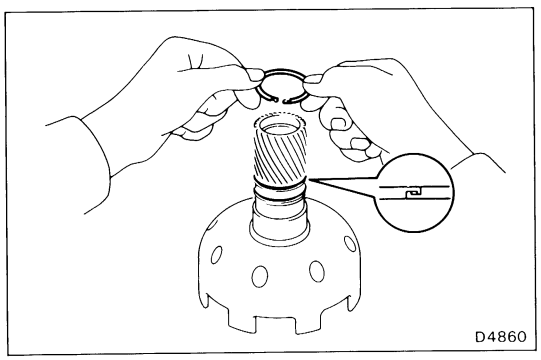

3. INSTALL OIL SEAL RINGS

(a) Coat the two oil seal rings with ATF.

(b) Install the two oil seal rings onto the planetary sun gear.

NOTICE: Do not spread the ring ends too much.

HINT: After installing the oil seal rings, check that they rotate smoothly.

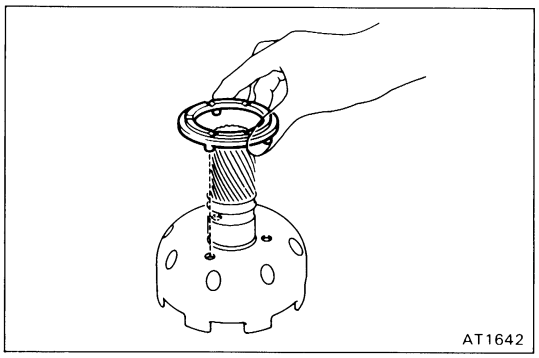

4. INSTALL THRUST WASHER

HINT: Make sure that the lug shapes match the holes on the sun gear input drum.

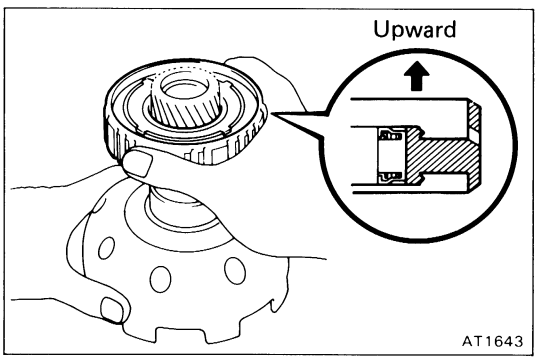

5. INSTALL ASSEMBLED NO. 1 ONE-WAY CLUTCH AND SECOND BRAKE HUB ONTO PLANETARY SUN GEAR AS SHOWN

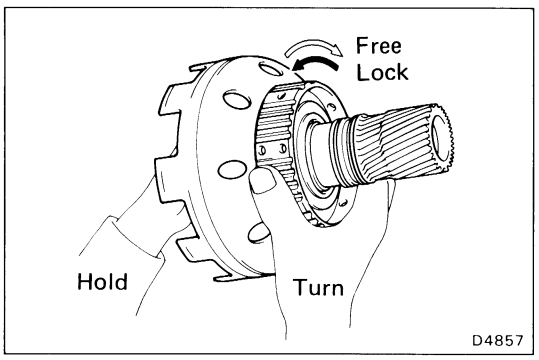

6. CHECK OPERATION OF NO. 1 ONE-WAY CLUTCH

Hold the planetary sun gear and turn the second brake hub. The second brake hub turns freely clockwise and locks counterclockwise.

Second Brake

COMPONENTS

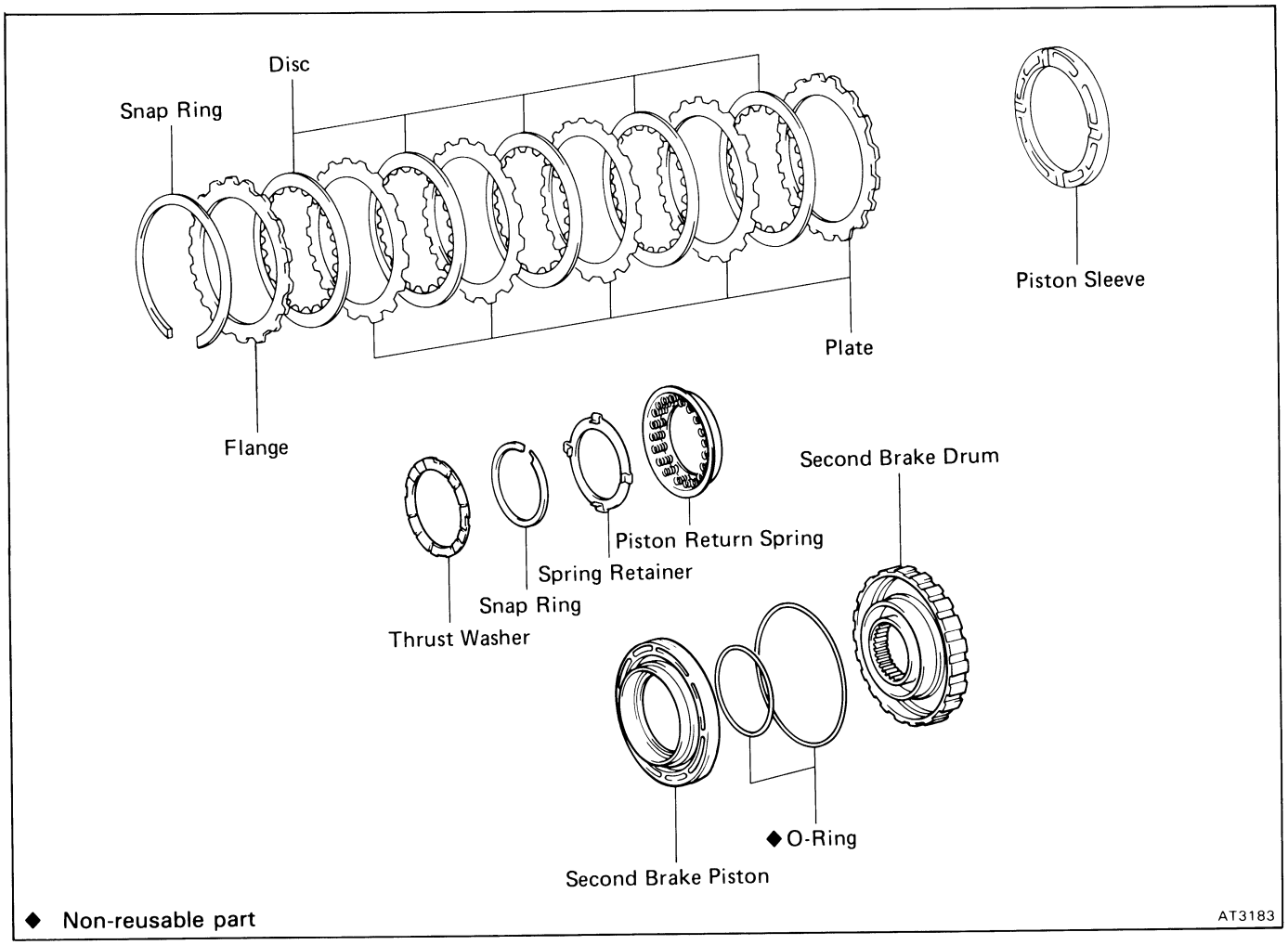

◆ Non-reusable part

DISASSEMBLY OF SECOND BRAKE

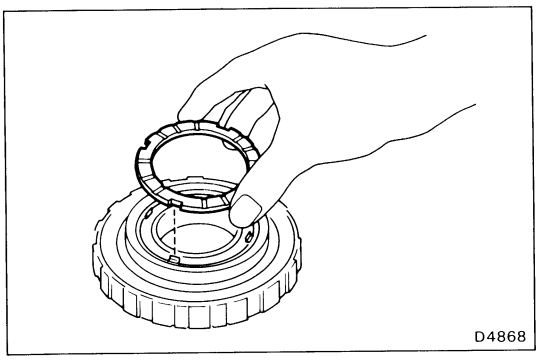

1. **REMOVE THRUST WASHER FROM SECOND BRAKE DRUM**

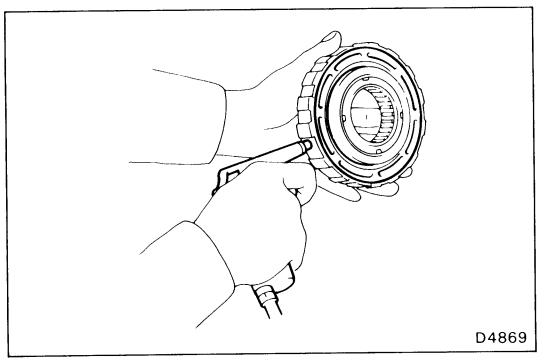

2. **CHECK SECOND BRAKE PISTON MOVING**

   Make sure the second brake piston moves smoothly when applying and releasing low-pressure compressed air to the second brake drum.

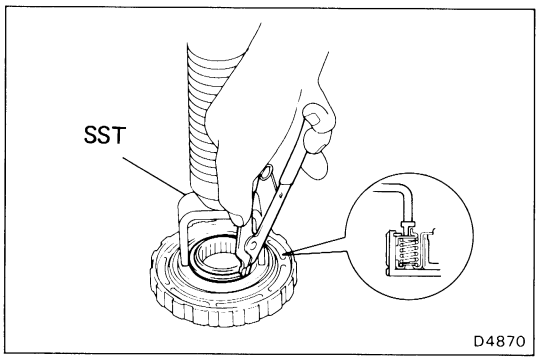

3. REMOVE PISTON RETURN SPRING

(a) Place SST on the spring retainer, and compress the return spring with a shop press.

SST 09350-30020 (09350-07040)

(b) Remove the snap ring with snap ring pliers.

(c) Remove the spring retainer.

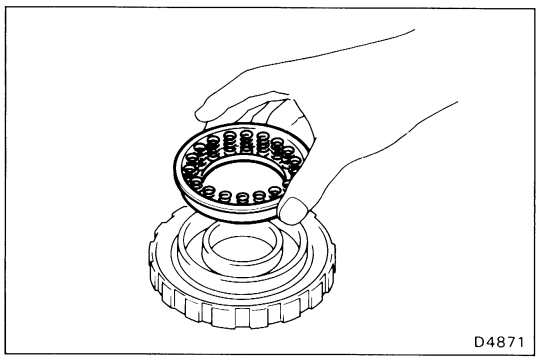

(d) Remove the piston return spring.

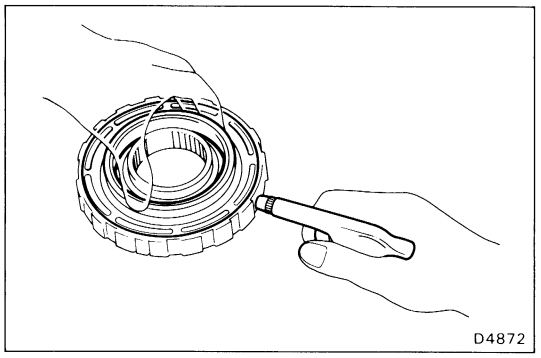

4. REMOVE SECOND BRAKE PISTON

(a) Hold the second brake piston with hand, apply compressed air to the second brake drum to remove the second brake piston.

(b) Remove the second brake piston.

(c) Remove the two O-rings from the piston.

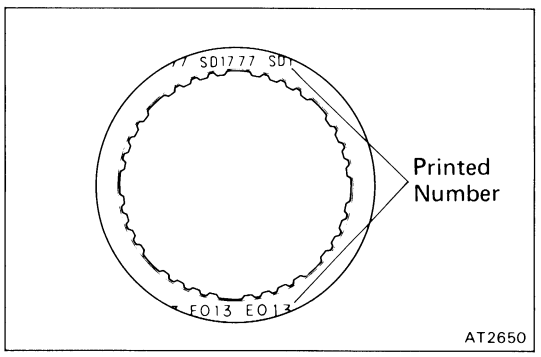

INSPECTION OF SECOND BRAKE

INSPECT DISC, PLATE AND FLANGE

Check to see if the sliding surface of the disc, plate and flange are worn or burnt. If necessary, replace them.

HINT:

- If the lining of the disc is peeling off or discolored, or even if parts of the printed numbers are defaced, replace all discs.
- Before assembling new discs, soak them in ATF for at least two hours.

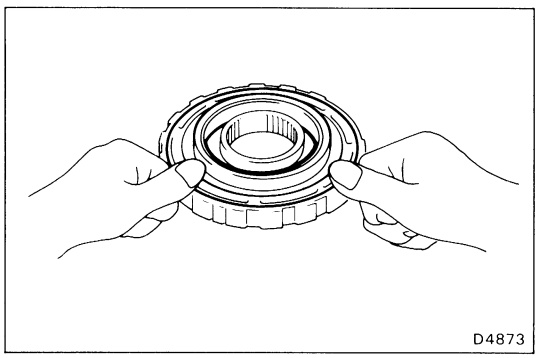

ASSEMBLY OF SECOND BRAKE

1. INSTALL SECOND BRAKE PISTON

(a) Coat new O-rings with ATF and install them on the second brake piston.

(b) Being careful not to damage the O-rings, press in the second brake piston into the second brake drum with both hands.

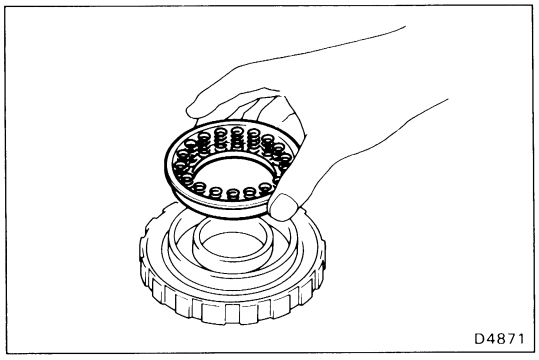

2. INSTALL PISTON RETURN SPRING

(a) Install the piston return spring.

(b) Install the spring retainer.

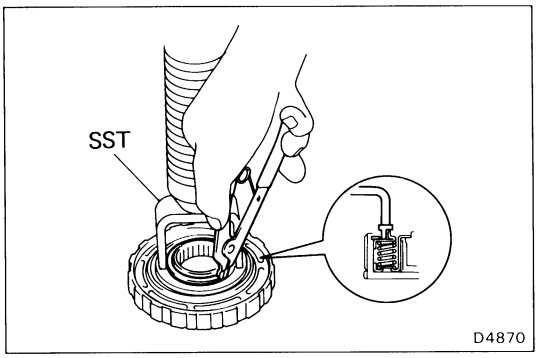

(c) Place SST on the spring retainer, and compress the return spring with a shop press.

SST 09350-30020 (09350-07040)

(d) Install the snap ring with snap ring pliers.

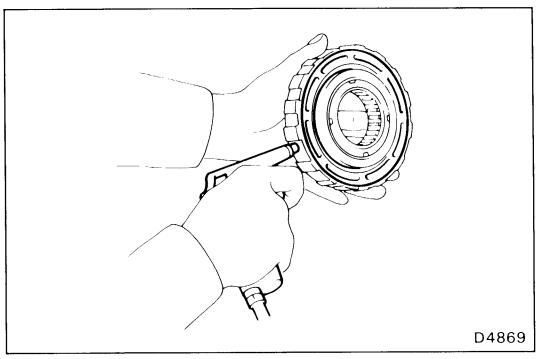

3. CHECK SECOND BRAKE PISTON MOVING

Make sure the second brake piston moves smoothly when applying and releasing low-pressure compressed air to the second brake drum.

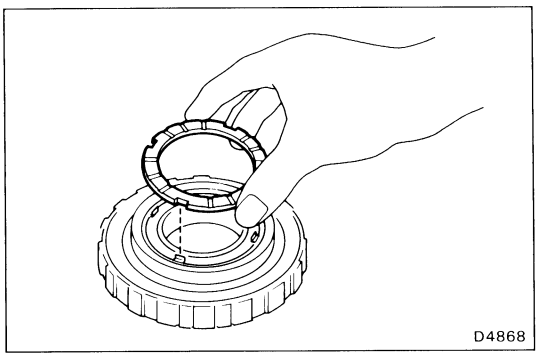

4. INSTALL THRUST WASHER

Coat the thrust washer with petroleum jelly and install it.

HINT: Make sure that the cutout portions of thrust washer match teeth of the spring retainer.

First and Reverse Brake

COMPONENTS

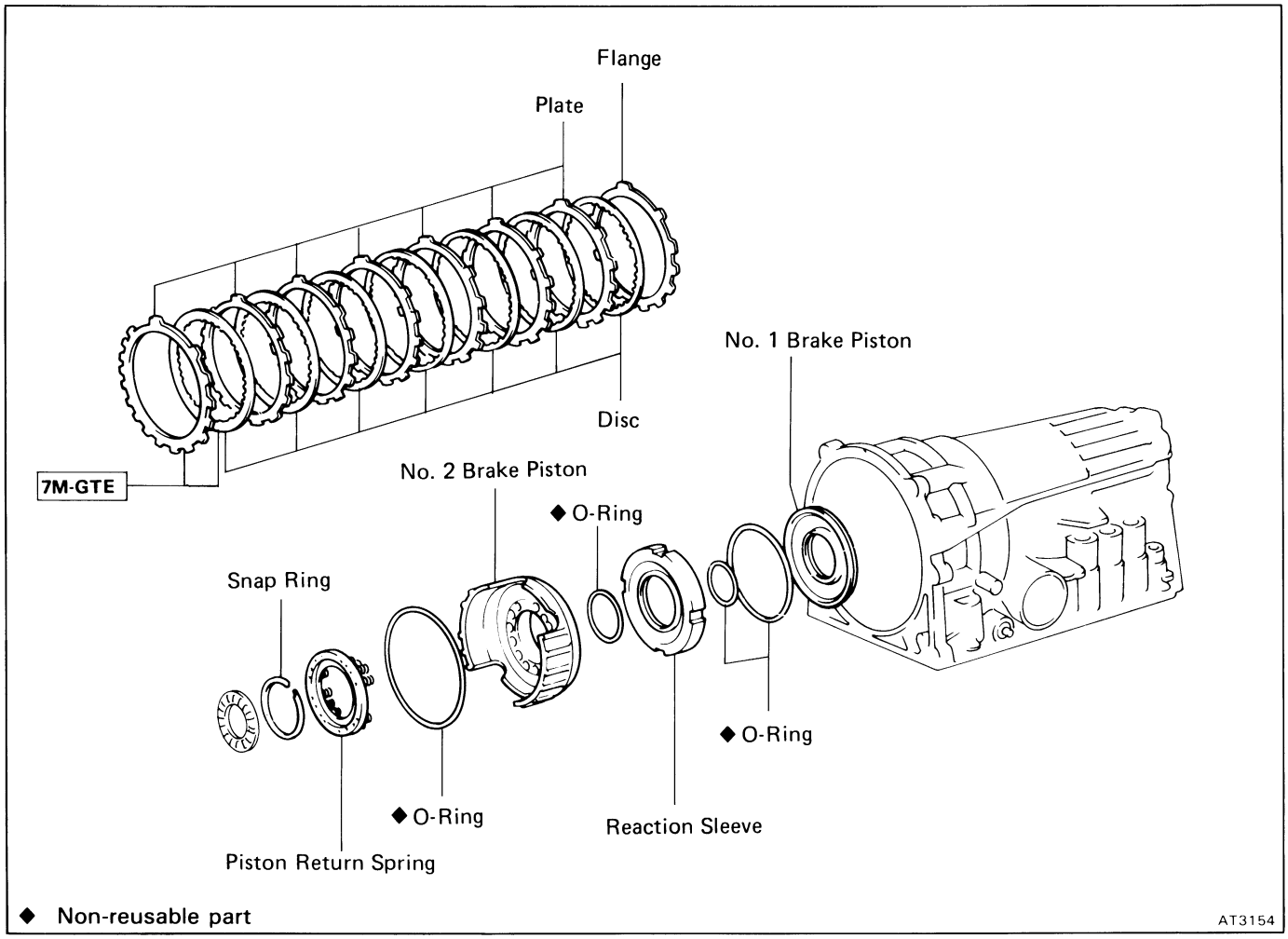

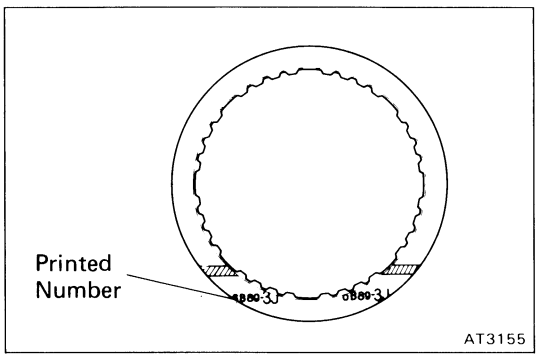

INSPECTION OF FIRST AND REVERSE BRAKE

INSPECT DISC, PLATE AND FLANGE

Check to see if the sliding surface of the disc, plate and flange are worn or burnt. If necessary, replace them.

HINT:

- If the lining of the disc is peeling off or discolored, or even if parts of the printed numbers are defaced, replace all discs.
- Before assembling new discs, soak them in ATF for at least two hours.

Rear Planetary Gear, No. 2 One-Way Clutch and Output Shaft

COMPONENTS

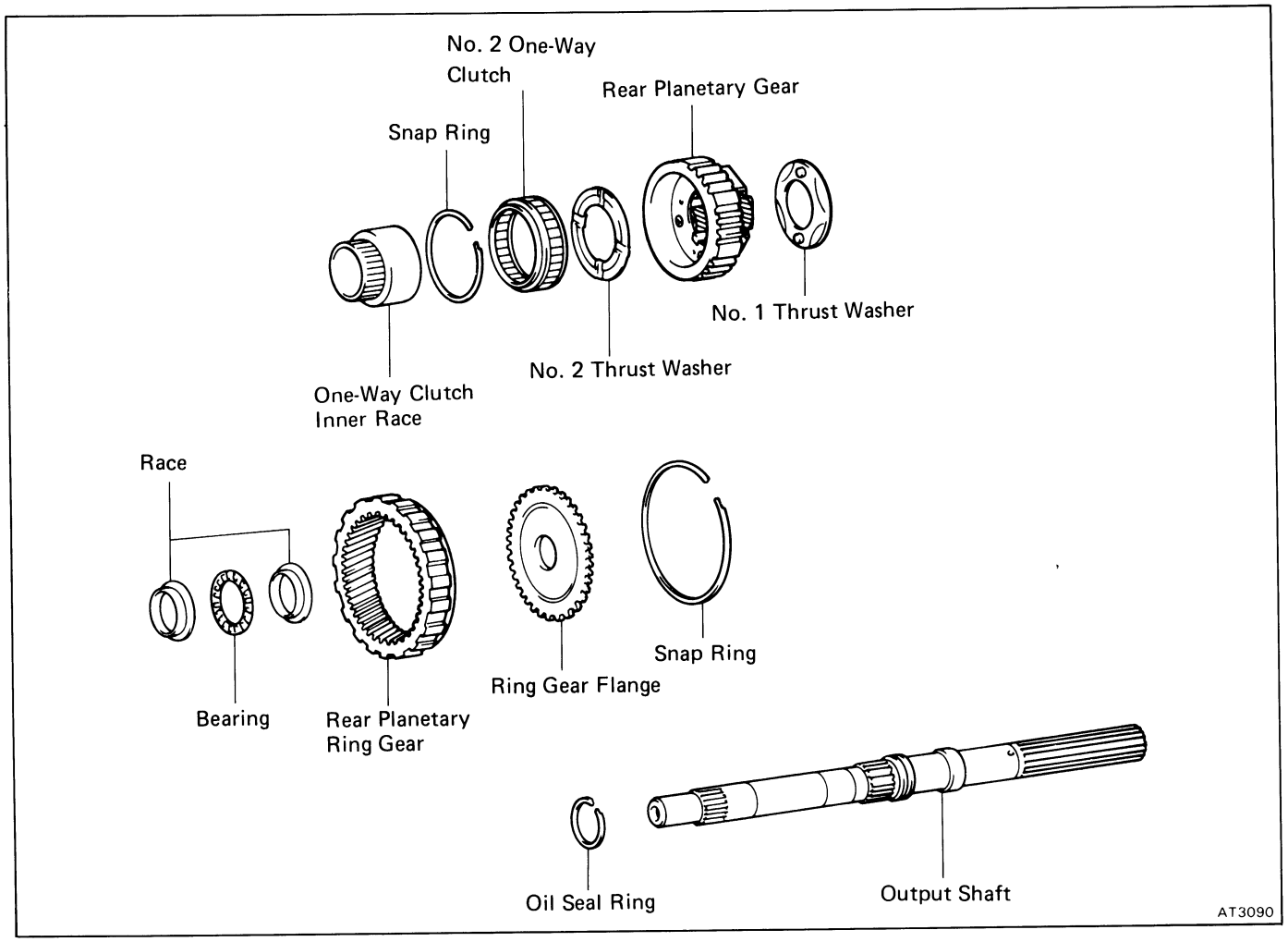

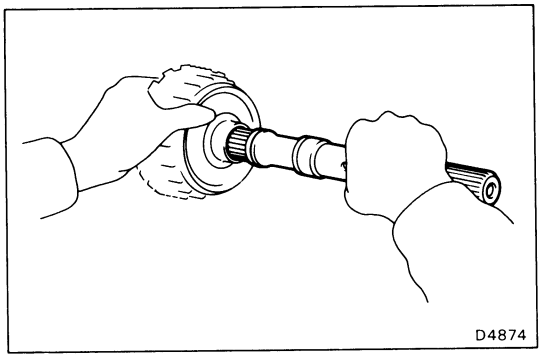

DISASSEMBLY OF REAR PLANETARY GEAR, NO. 2 ONE-WAY CLUTCH AND OUTPUT SHAFT

1. **REMOVE OUTPUT SHAFT FROM REAR PLANETARY GEAR ASSEMBLY**

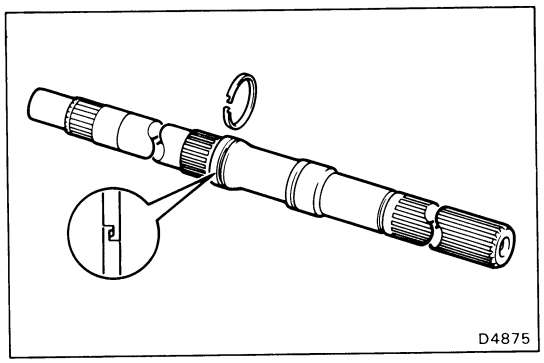

2. **REMOVE OIL SEAL RING FROM OUTPUT SHAFT**

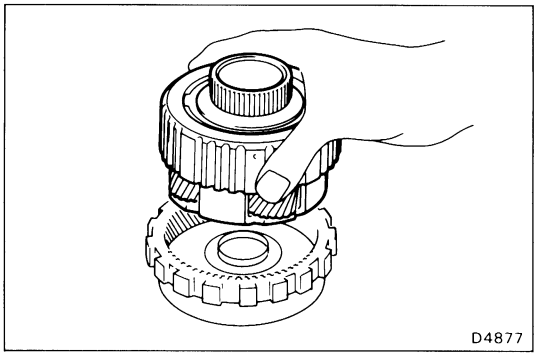

3. REMOVE REAR PLANETARY GEAR FROM REAR PLANETARY RING GEAR

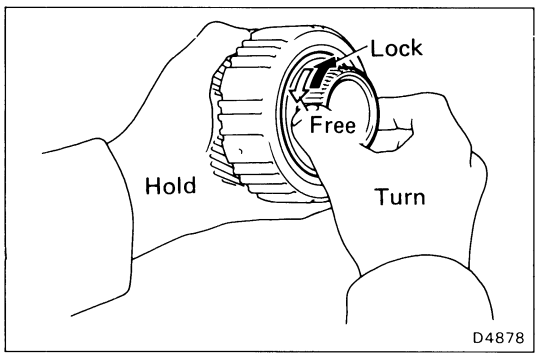

4. CHECK OPERATION OF NO. 2 ONE-WAY CLUTCH

Hold the planetary gear and turn the one-way clutch inner race. The one-way clutch inner race turns freely counter-clockwise and locks clockwise.

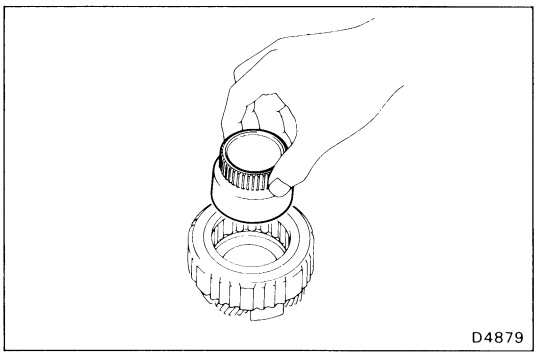

5. REMOVE NO. 2 ONE-WAY CLUTCH

(a) Remove the one-way clutch inner race from the rear planetary gear.

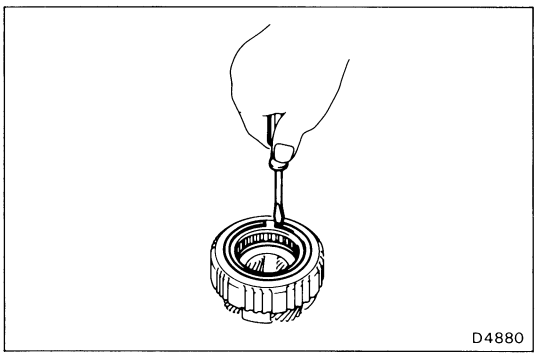

(b) Remove the snap ring with a screwdriver.

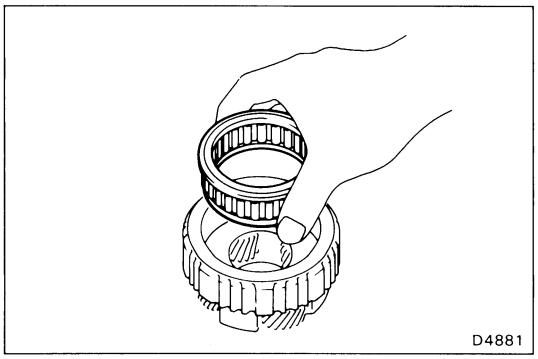

(c) Remove No. 2 one-way clutch with retainers from the planetary gear.

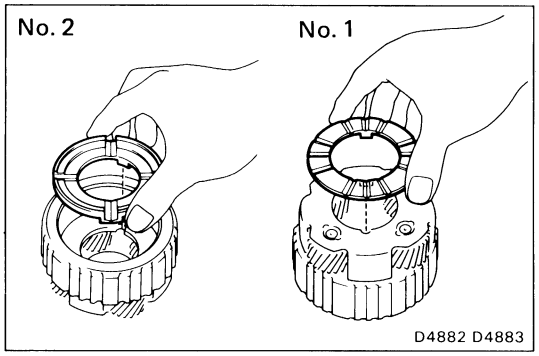

6. **REMOVE NO. 2 AND NO. 1 THRUST WASHERS**

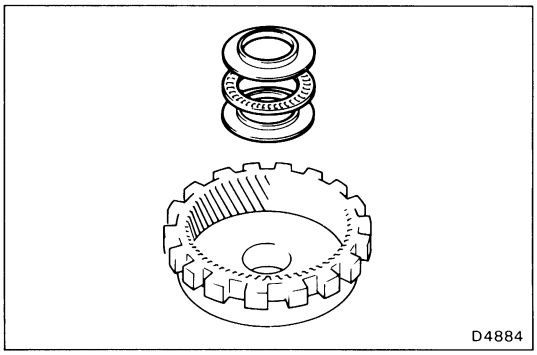

7. **REMOVE RACES AND BEARING FROM REAR PLANETARY RING GEAR**

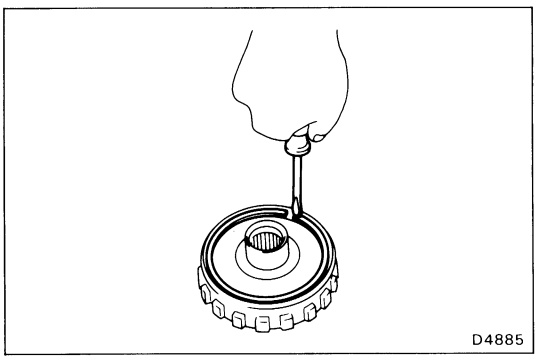

8. **REMOVE RING GEAR FLANGE**

(a) Remove the snap ring with a screwdriver.

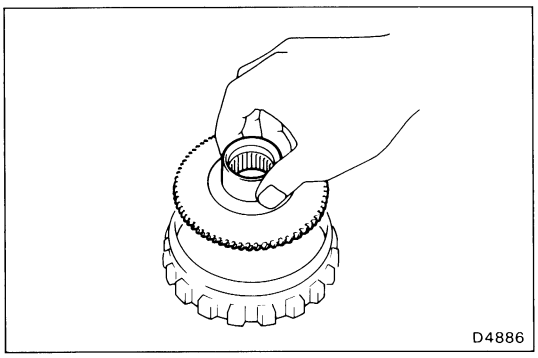

(b) Remove the ring gear flange.

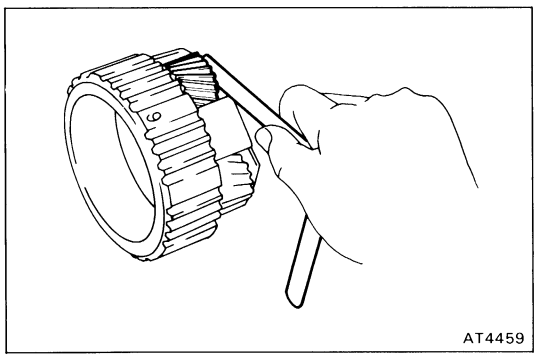

INSPECTION OF REAR PLANETARY GEAR

MEASURE PLANETARY PINION GEAR THRUST CLEARANCE

Using a feeler gauge, measure the planetaty pinion gear thrust clearance.

Standard clearance: **0.20 — 0.60 mm (0.0079 — 0.0236 in.)**

Maximum clearance: **1.00 mm (0.0394 in.)**

If the clearance is greater than the maximum, replace the planetary gear assembly.

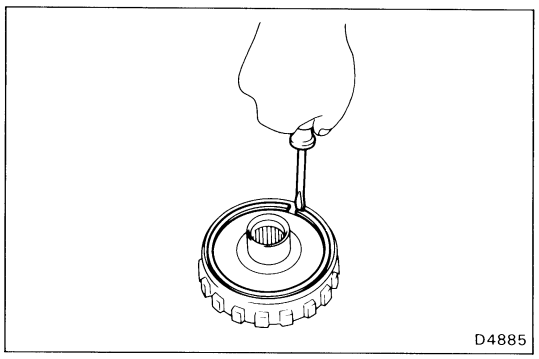

ASSEMBLY OF REAR PLANETARY GEAR, NO. 2 ONE-WAY CLUTCH AND OUTPUT SHAFT

1. INSTALL RING GEAR FLANGE

(a) Install the ring gear flange.

(b) Install the snap ring.

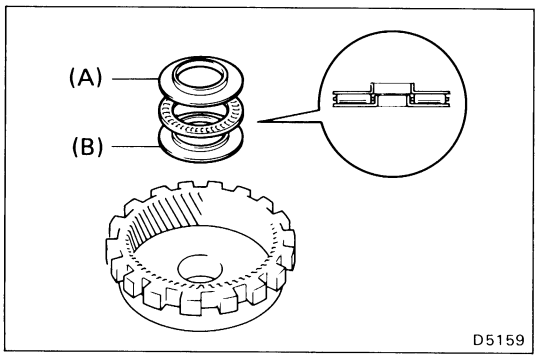

2. INSTALL RACES AND BEARING

Coat the races and bearing with petroleum jelly, and install them onto the rear planetary ring gear.

HINT: Races and bearing diameter

mm (in.)

	Inside	Outside
Race (A)	28.8 (1.134)	44.8 (1.764)
Bearing	30.1 (1.185)	44.7 (1.760)
Race (B)	27.8 (1.094)	44.8 (1.764)

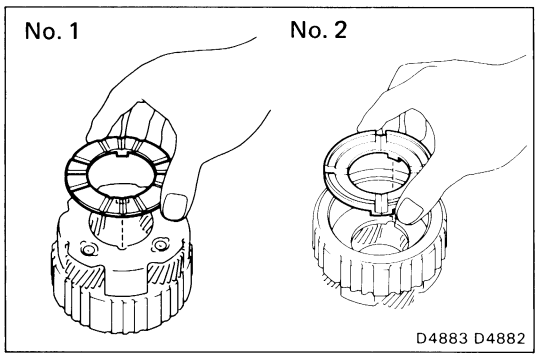

3. INSTALL NO. 1 AND NO. 2 THRUST WASHERS

(a) Coat the thrust washers with petroleum jelly.

(b) Install the thrust washers onto both sides of the rear planetary gear.

HINT: Make sure that the lug shapes match the cutout portions on the rear planetary gear.

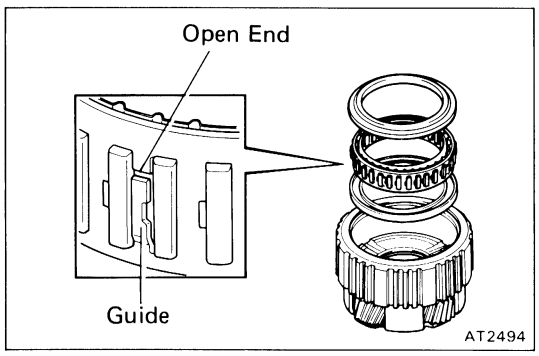

4. INSTALL NO. 2 ONE-WAY CLUTCH

(a) Install the one-way clutch and two retainers into the rear planetary gear as shown in the figure.

HINT: Make sure that the open ends of the guides on the one-way clutch are faced upward.

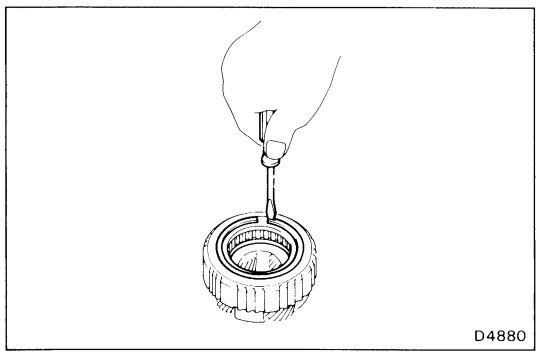

(b) Install the snap ring.

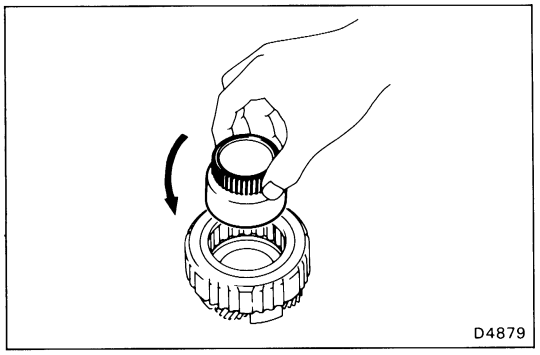

(c) While turning counterclockwise, install the one-way clutch inner race to the rear planetary gear.

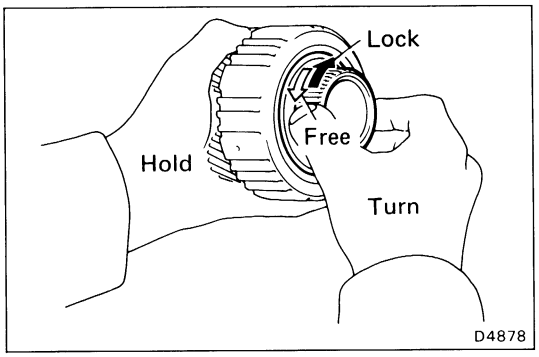

5. **CHECK OPERATION OF NO. 2 ONE-WAY CLUTCH**

Hold the planetary gear and turn the one-way clutch inner race. The one-way clutch inner race turns freely counterclockwise and locks clockwise.

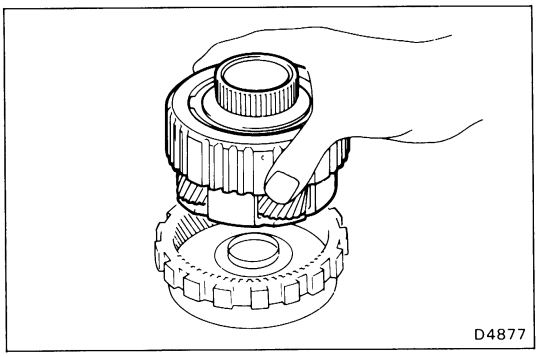

6. **INSTALL REAR PLANETARY GEAR ONTO REAR PLANETARY RING GEAR**

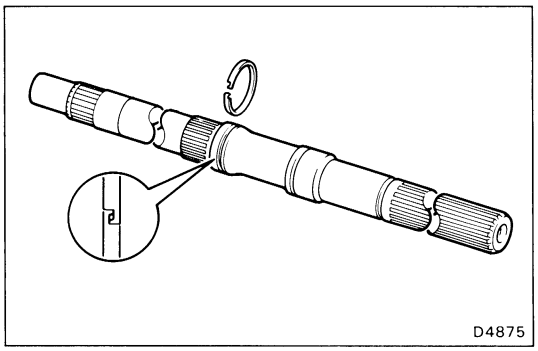

7. **INSTALL OIL SEAL RING**

Coat the oil seal ring with ATF and install it to the output shaft.

NOTICE: Do not spread the ring ends too match.

HINT: After installing the oil seal ring, check that it rotates smoothly.

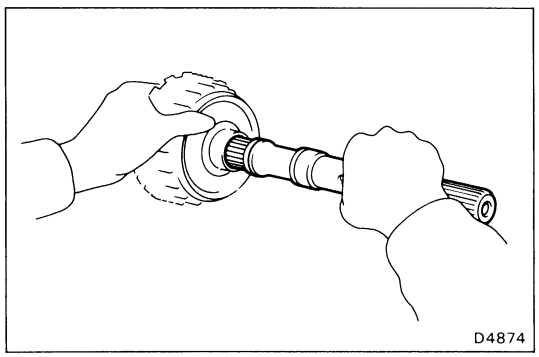

8. **INSTALL OUTPUT SHAFT INTO REAR PLANETARY GEAR ASSEMBLY**

Valve Body

COMPONENTS

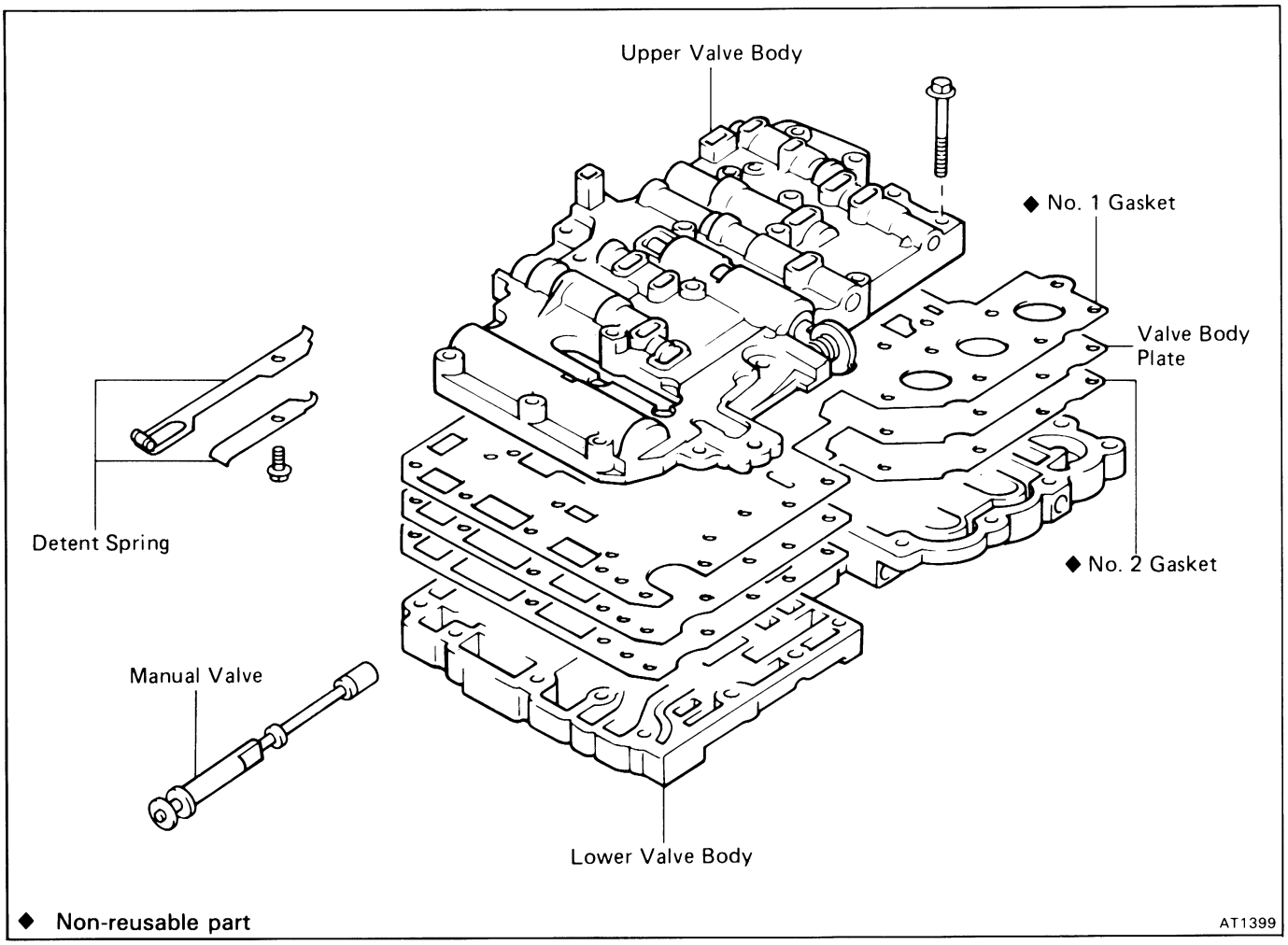

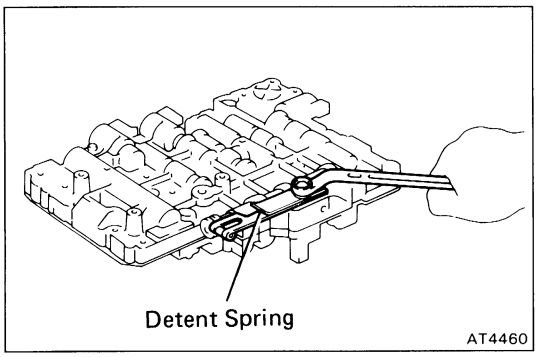

(Disassembly of Valve Body)

1. UNBOLT AND REMOVE DETENT SPRING

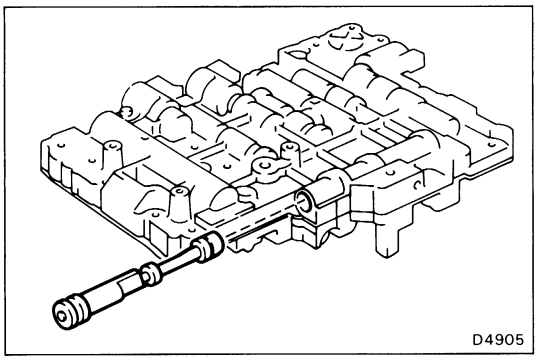

2. REMOVE MANUAL VALVE

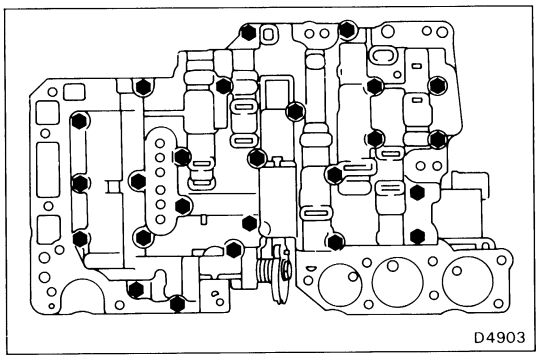

3. **TURN OVER ASSEMBLY AND REMOVE TWENTY-FIVE BOLTS**

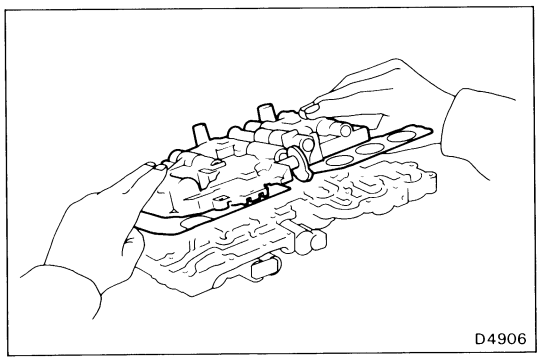

4. **LIFT OFF UPPER VALVE BODY AND PLATE AS A SINGLE UNIT**

Hold the valve body plate to the upper valve body.

HINT: Be careful that the check balls and strainer do not fall out.

(Upper Valve Body)

COMPONENTS

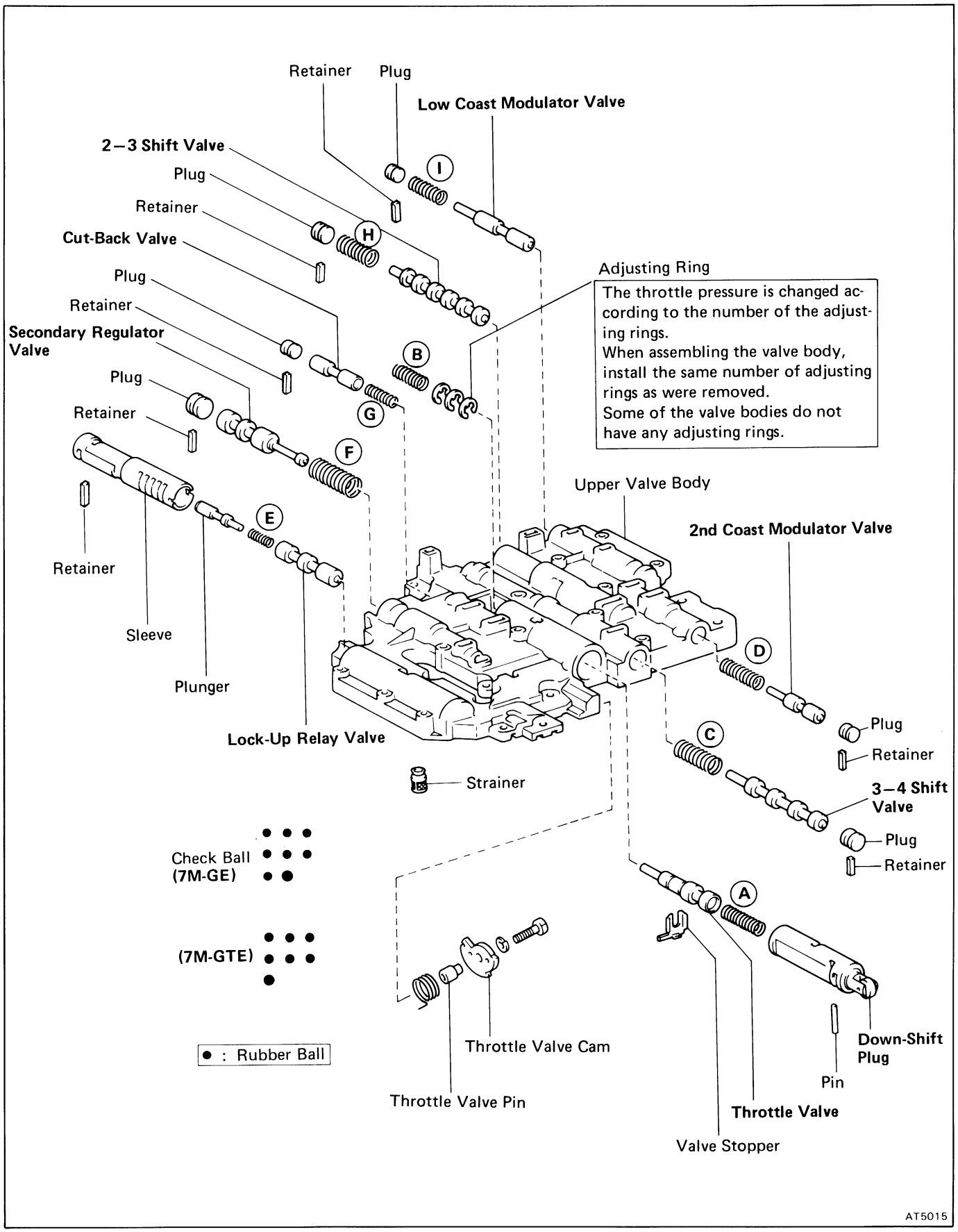

SPECIFICATIONS OF VALVE BODY SPRINGS

Spring		Free length mm (in.)	Coil outer diameter mm (in.)	Total No. of coils	Color
Ⓐ	Down-shift plug	27.3 (1.075)	8.7 (0.343)	12.5	Yellow
Ⓑ	Throttle valve	20.6 (0.811) or 23.3 (0.917)	9.2 (0.362) 9.2 (0.362)	9.5 9.5	Blue White
Ⓒ	3 – 4 shift valve	30.8 (1.213)	9.7 (0.382)	10.5	Purple
Ⓓ	Second coast modulator valve	**7M-GE** 25.3 (0.996) **7M-GTE** 29.6 (1.165)	8.6 (0.339) 8.3 (0.327)	11.5 12.5	Orange Red
Ⓔ	Lock-up relay valve	21.4 (0.843)	5.5 (0.217)	17.5	Light Gray
Ⓕ	Secondary regulator valve	30.9 (1.217)	11.2 (0.441)	10.5	Blue
Ⓖ	Cut-back valve	21.8 (0.858)	6.0 (0.236)	13.5	None
Ⓗ	2 – 3 shift valve	30.8 (1.213)	9.7 (0.382)	10.5	Purple
Ⓘ	Low coast modulator valve	27.8 (1.094)	8.3 (0.327)	10.5	Pink

HINT: During reassembly, please refer to the spring specifications above to help differentiate the different springs.

SECTIONAL VIEW OF VALVE BODY

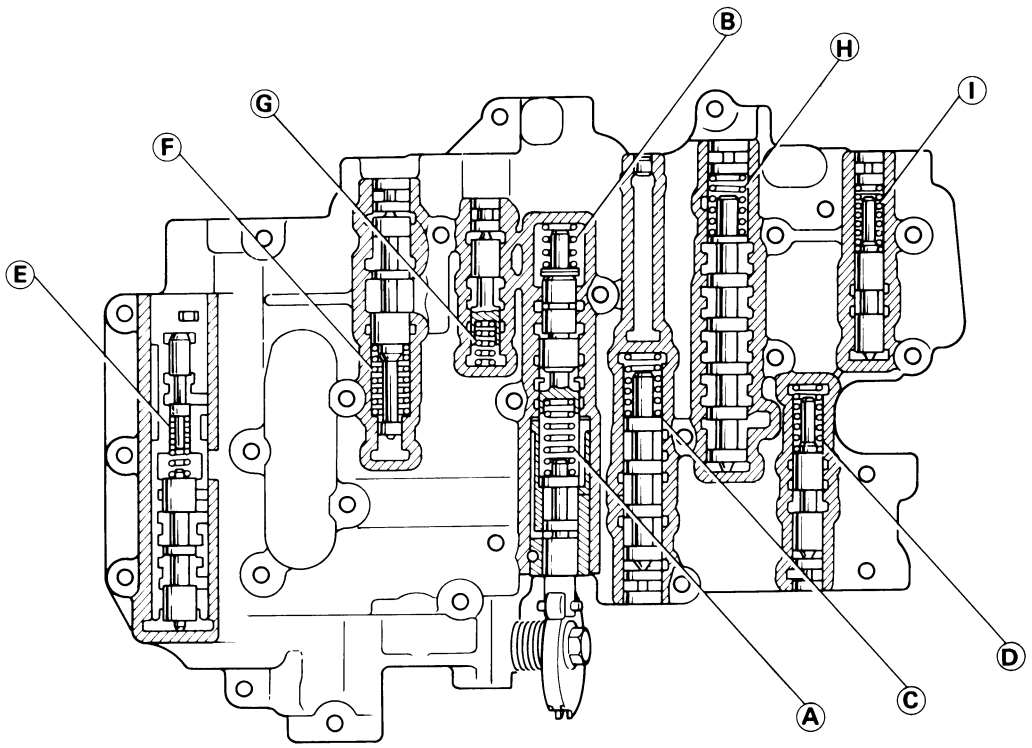

D1373

LOCATION OF RETAINERS, PIN, STOPPER, CHECK BALLS AND STRAINER

1. RETAINER, STOPPER AND PIN

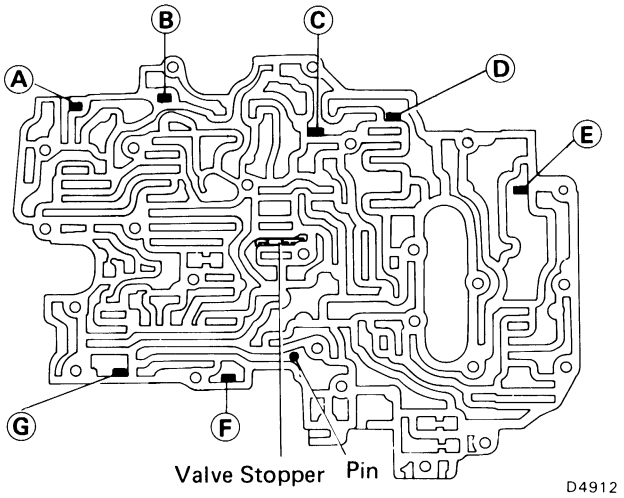

mm (in.)

Retainer		Height	Width	Thickness
A	Low coast modulator valve	14.5 (0.571)	5.0 (0.197)	3.2 (0.126)
B	2–3 shift valve	14.0 (0.551)	5.0 (0.197)	3.2 (0.126)
C	Cut-back valve	15.0 (0.591)	5.0 (0.197)	3.2 (0.126)
D	Secondary regulator valve	14.0 (0.551)	5.0 (0.197)	3.2 (0.126)
E	Lock-up relay valve	21.2 (0.835)	5.0 (0.197)	3.2 (0.126)
F	3–4 shift valve	16.5 (0.650)	6.0 (0.236)	3.2 (0.126)
G	2nd coast modulator valve	16.5 (0.650)	6.0 (0.236)	3.2 (0.126)

2. CHECK BALL

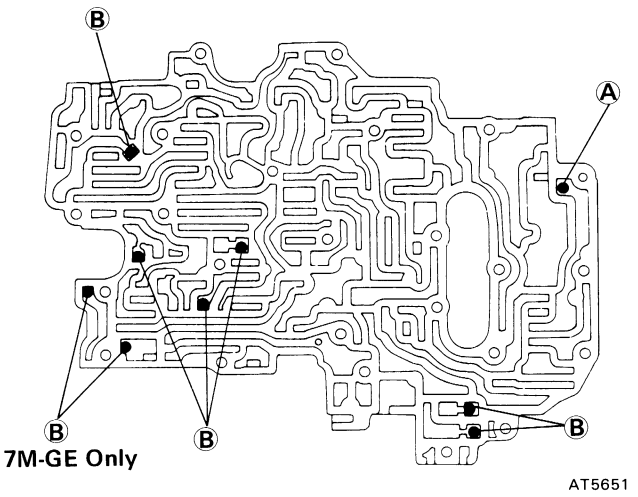

Check ball		Diameter mm (in.)
A	Rubber ball	6.35 (0.2500)
B	Rubber ball	5.54 (0.2181)

3. STRAINER

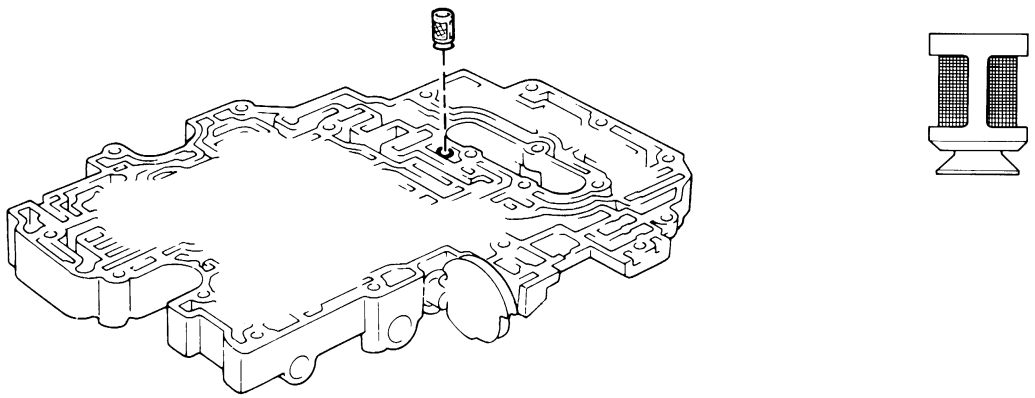

AT3243 AT4462

(Lower Valve Body)

COMPONENTS

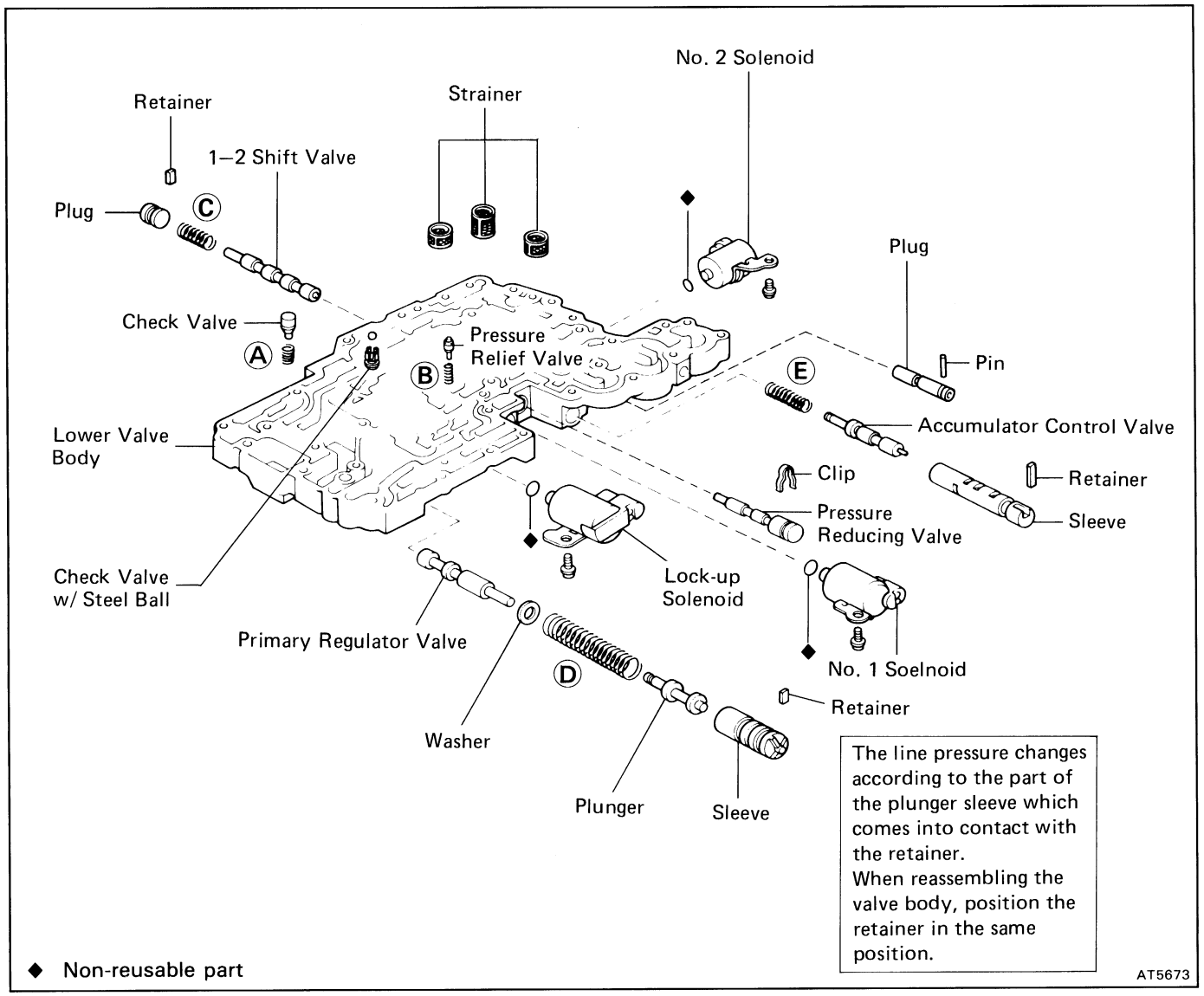

SPECIFICATIONS OF VALVE BODY SPRINGS

Spring		Free length mm (in.)	Coil outer diameter mm (in.)	Total No. of coils	Color
A	Check valve	20.2 (0.795)	12.1 (0.476)	6.5	None
B	Pressure relief valve	11.2 (0.441)	6.4 (0.252)	7.5	None
C	1–2 shift valve	30.8 (1.213)	9.7 (0.382)	10.5	Purple
D	Primary regulator valve	66.7 (2.626)	18.6 (0.732)	12.5	None
E	Accumulator control valve	33.9 (1.335)	8.8 (0.346)	12.0	Pink

HINT: During reassembly, please refer to the spring specifications above to help differentiate the different springs.

SECTIONAL VIEW OF VALVE BODY

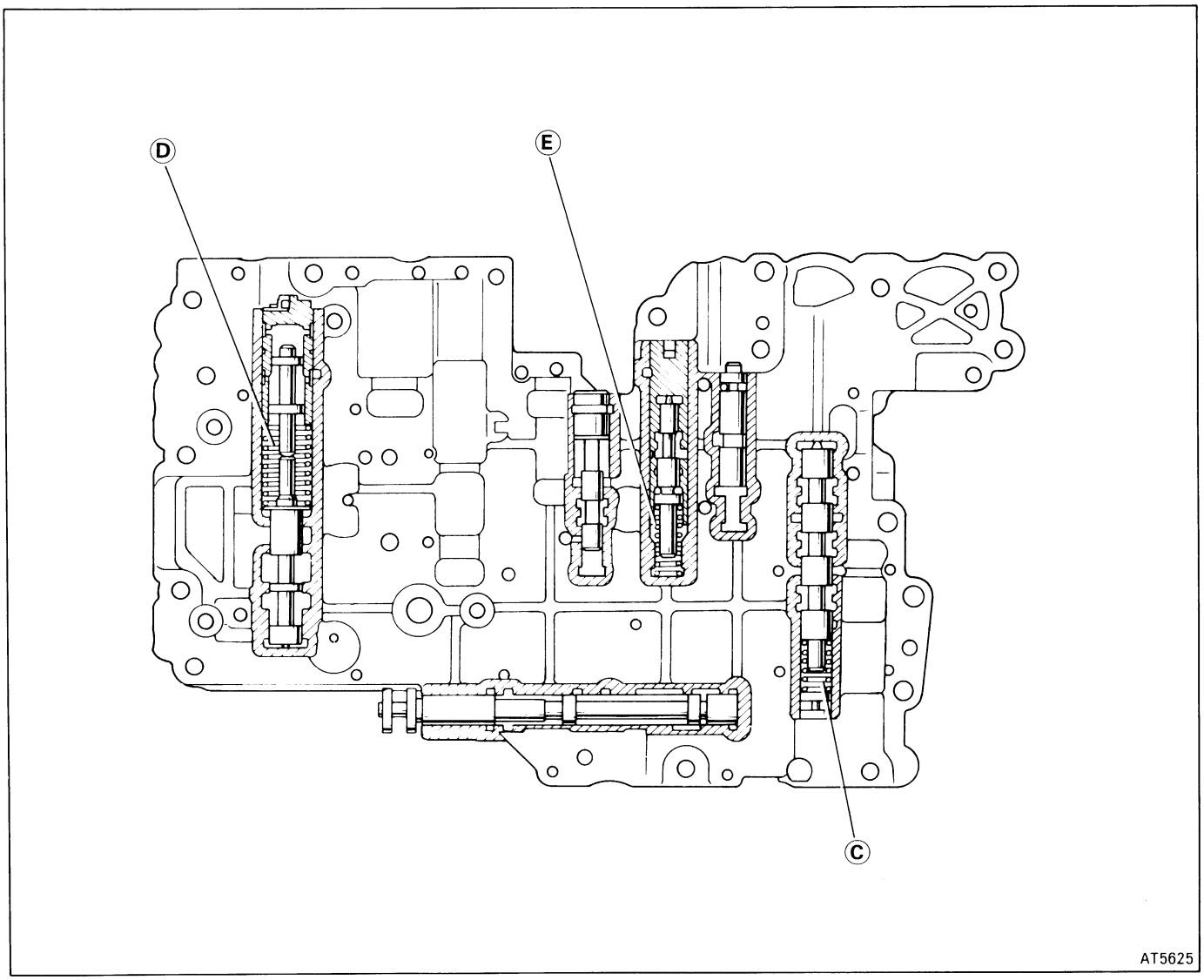

LOCATION OF RETAINERS, CLIP, PIN, CHECK BALLS, STRAINERS, SPRINGS AND VALVES

1. RETAINER, CLIP AND PIN

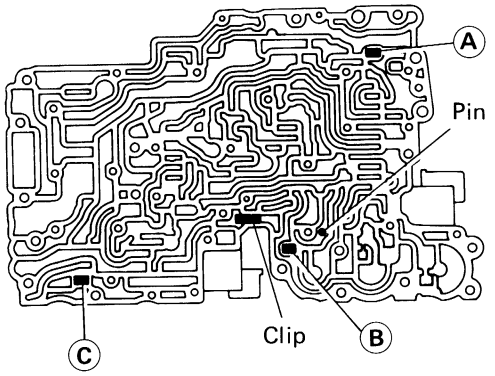

AT5626

mm (in.)

	Retainer	Height	Width	Thickness
A	1–2 shift valve	16.5 (0.650)	6.0 (0.236)	3.2 (0.126)
B	Accumulator control valve	21.2 (0.835)	5.0 (0.197)	3.2 (0.126)
C	Primary regulator valve	16.2 (0.638)	5.0 (0.197)	3.2 (0.126)

2. CHECK BALL

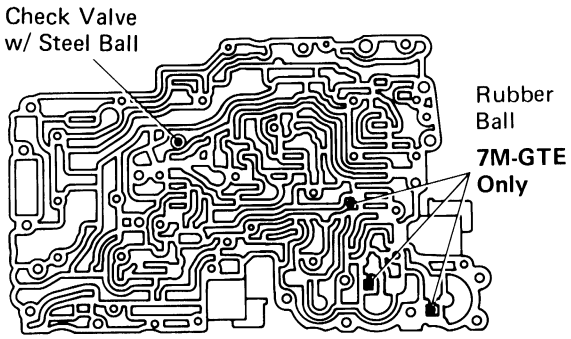

AT2346

Check ball	Diameter mm (in.)
Rubber ball	5.54 (0.2181)
Steel ball	6.35 (0.2500)

3. STRAINER, SPRING AND VALVE

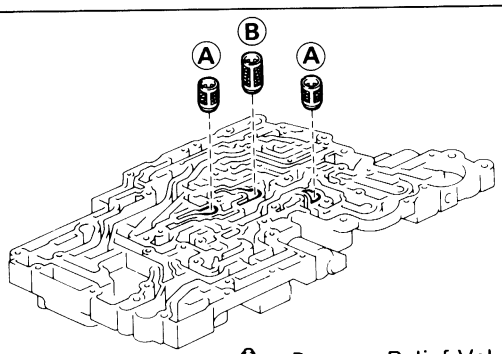

D4908

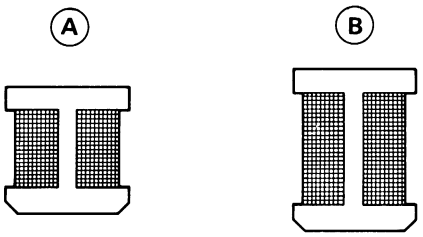

D4914

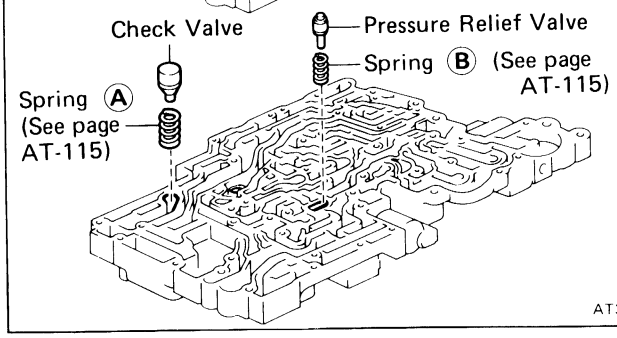

AT3296

mm (in.)

	Strainer	Height	Diameter
A	Solenoid oil strainer	11.0 (0.433)	10.3 (0.406)
B	Throttle oil strainer	19.5 (0.768)	10.3 (0.406)

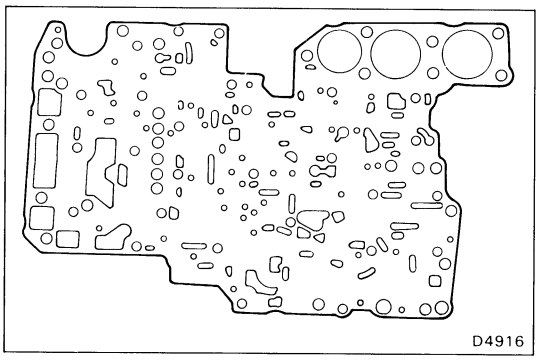

(Assembly of Valve Body)

(See page AT-109)

1. **POSITION NEW NO. 1 GASKET ON UPPER VALVE BODY**
   Align a new No. 1 gasket at each bolt hole.

2. **POSITION VALVE BODY PLATE ON NO. 1 GASKET**
   Align the plate at each bolt hole.

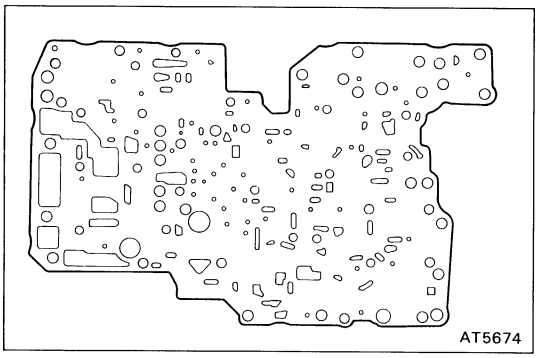

3. **POSITION NEW NO. 2 GASKET ON PLATE**
   Align a new No. 2 gasket at each bolt hole.

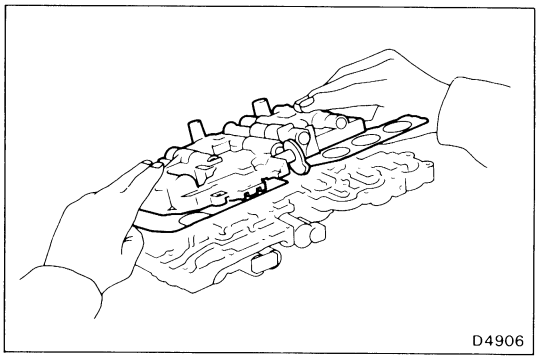

4. **PLACE UPPER VALVE BODY WITH PLATE AND GASKETS ON TOP OF LOWER VALVE BODY**
   Align each bolt hole and gasket in the valve body.

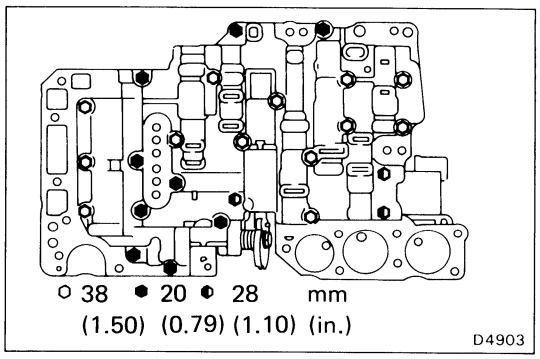

5. **INSTALL THE TWENTY-FIVE BOLTS TO UPPER VALVE BODY**
   HINT: Each bolt length (mm, in.) is indicated in the figure.
   Torque: 65 kg-cm (56 in.-lb, 6.4 N·m)

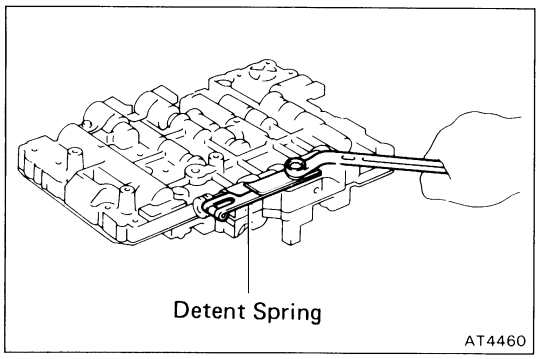

6. **INSTALL MANUAL VALVE**

7. **INSTALL DETENT SPRING**
   Torque: 100 kg-cm (7 ft-lb, 10 N·m)

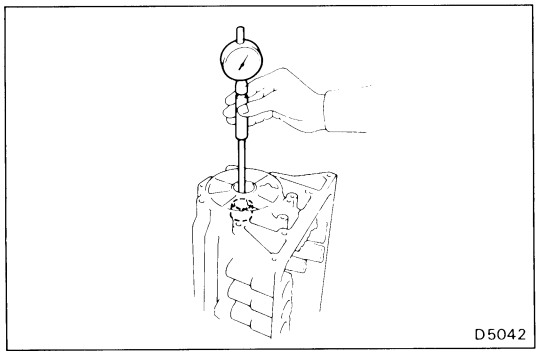

Transmission Case

INSPECTION OF TRANSMISSION CASE

INSPECT TRANSMISSION CASE BUSHING

Using a cylinder gauge, measure the inside diameter of the transmission case rear bushing.

Maximum inside diameter: 38.19 mm (1.5035 in.)

If the inside diameter is greater than the maximum, replace the transmission case.

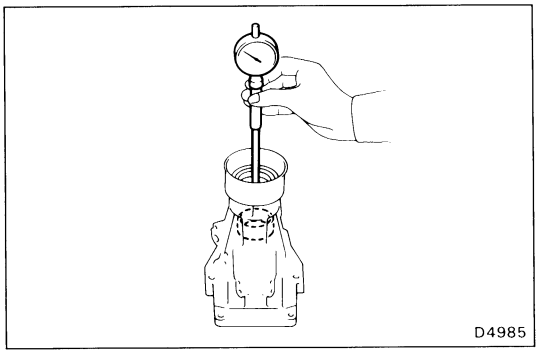

Extension Housing

INSPECTION OF EXTENSION HOUSING

1. **INSPECT EXTENSION HOUSING BUSHING**

Using a cylinder gauge, measure the inside diameter of the extension housing bushing.

Maximum inside diameter: 40.09 mm (1.5783 in.)

If the inside diameter is greater than the maximum, replace the extension housing.

2. **IF NECESSARY, REPLACE OIL SEAL**

(a) Using SST, remove the oil seal.

SST 09308-00010 or
09308-10010 with output shaft installed

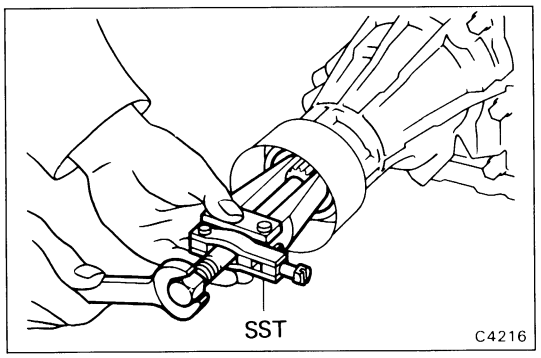

(b) Using SST, drive in a new oil seal as far as it will go.

SST 09325-40010

(c) Coat the oil seal lip with MP grease.

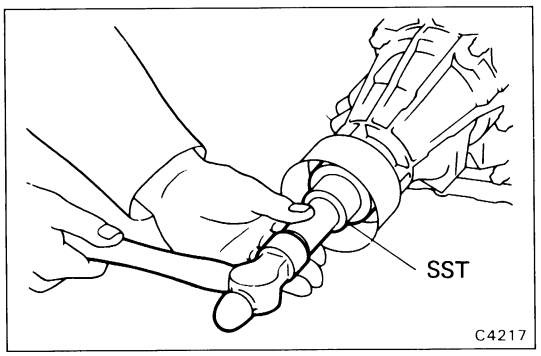

INSTALLATION OF COMPONENT PARTS

(See pages AT-46 to 48)

Disassembly, inspection and assembly of each component group have been indicated in the preceding chapter. Before assembly, make sure again that all component groups are assembled correctly.

If something wrong is found in a certain component group during assembly, inspect and repair this group immediately.

Recommended ATF: DEXRON® II

GENERAL NOTES:

1. The automatic transmission is composed of highly precision-finished parts, necessitating careful inspection before assembly because even a small nick could cause fluid leakage or affect performance.
2. Before assembling new clutch discs, soak them in automatic transmission fluid for at least two hours.
3. Apply automatic transmission fluid on sliding or rotating surfaces of parts before assembly.
4. Use petroleum jelly to keep small parts in their place.
5. Do not use adhesive cements on gaskets and similar parts.
6. When assembling the transmission, sure to use new gaskets and O-rings.
7. Dry all parts with compressed air — never use shop rags.
8. When working with FIPG material, you must be observe the following.
   - Using a razor blade and gasket scraper, remove all the old packing (FIPG) material from the gasket surfaces.
   - Thoroughly clean all components to remove all the loose material.
   - Clean both sealing surfaces with a non-residue solvent.
   - Parts must be assembled within 10 minutes of application. Otherwise, the packing (FIPG) material must be removed and reapplied.

INSTALLATION POSITION AND DIRECTION OF BEARINGS AND RACES

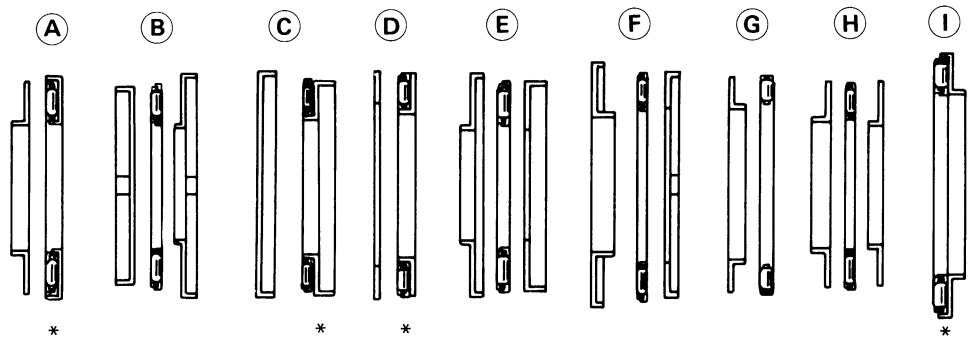

* Assembled type bearing and race

Front

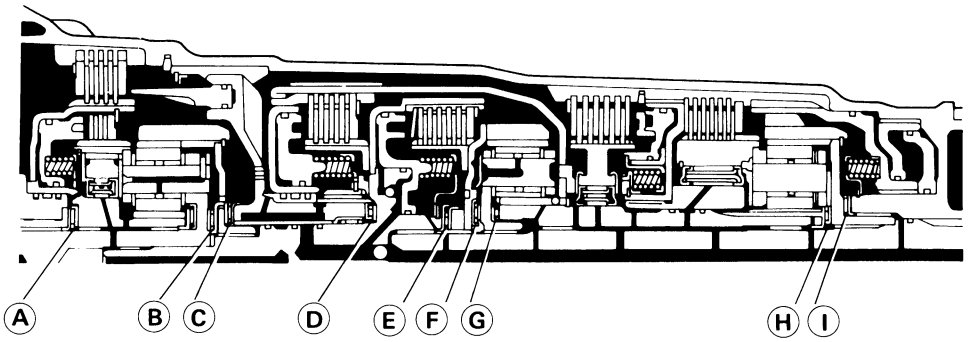

mm (in.) AT5013 D5069

	Front Bearing Race		Thrust Bearing		Rear Bearing Race	
	Inner Diameter	Outer Diameter	Inner Diameter	Outer Diameter	Inner Diameter	Outer Diameter
A	28.1 (1.106)	47.3 (1.862)	28.9 (1.138)	50.2 (1.976)	—	—
B	27.1 (1.067)	41.8 (1.646)	26.0 (1.024)	46.8 (1.843)	24.2 (0.953)	47.8 (1.882)
C	37.2 (1.465)	58.8 (2.315)	33.7 (1.327)	51.1 (2.012)	—	—
D	36.8 (1.449)	50.9 (2.004)	33.7 (1.327)	47.6 (1.874)	—	—
E	26.0 (1.024)	48.9 (1.925)	26.0 (1.024)	46.7 (1.839)	26.8 (1.055)	47.0 (1.850)
F	30.6 (1.205)	53.6 (2.110)	32.6 (1.283)	47.7 (1.878)	34.3 (1.350)	47.8 (1.882)
G	33.7 (1.327)	47.6 (1.874)	35.5 (1.398)	47.7 (1.878)	—	—
H	28.8 (1.134)	44.8 (1.764)	30.1 (1.185)	44.7 (1.760)	27.8 (1.094)	44.8 (1.764)
I	—	—	39.2 (1.543)	57.7 (2.272)	—	—

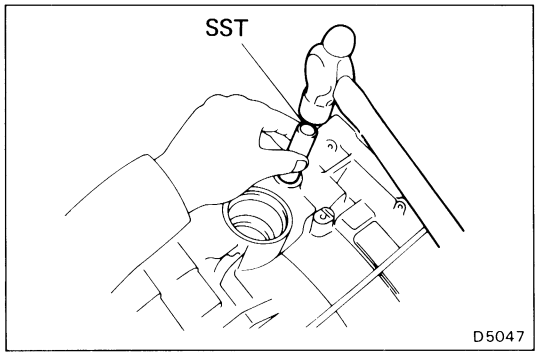

1. INSTALL MANUAL VALVE LEVER, SHAFT AND OIL SEALS

(a) Using SST, drive in two new oil seals.

SST 09350-30020 (09350-07110)

(b) Coat the oil seal lip with MP grease.

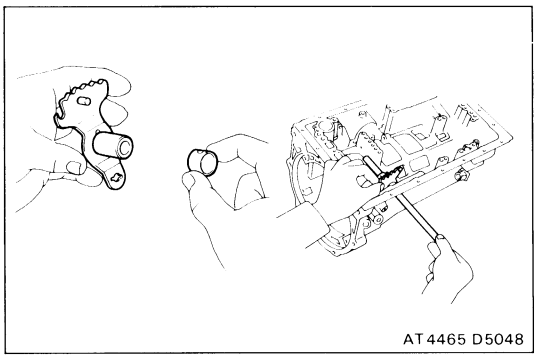

(c) Assemble a new spacer to the manual valve lever.

(d) Install the manual valve lever shaft to the transmission case through the manual valve lever.

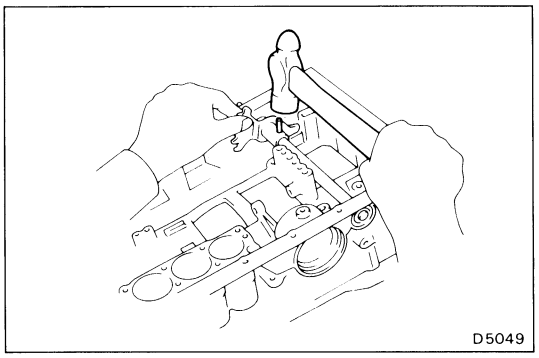

(e) Drive in the pin to the shaft.

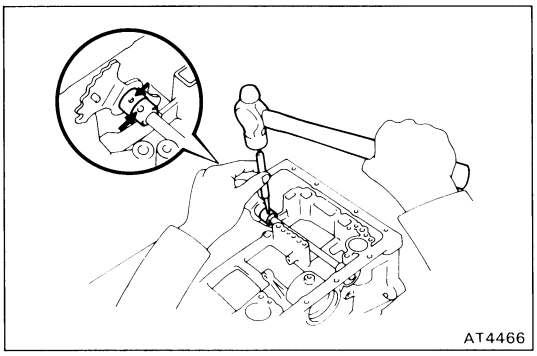

(f) Match the spacer hole to the lever calking hollow and calk the spacer to the lever.

(g) Make sure the manual valve lever shaft turns smoothly.

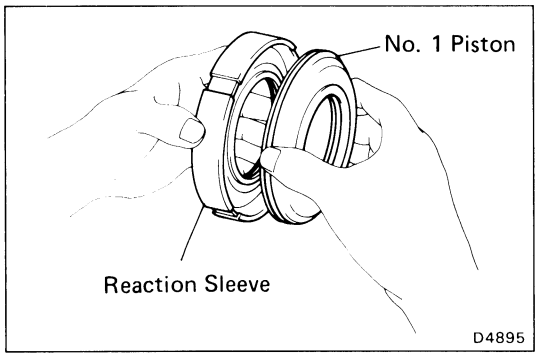

2. INSTALL COMPONENTS OF FIRST AND REVERSE BRAKE PISTON

(a) Coat three new O-rings with ATF.

(b) Install the two O-rings on No. 1 piston.

(c) Install the O-ring on the reaction sleeve.

(d) Install No. 1 piston to the reaction sleeve.

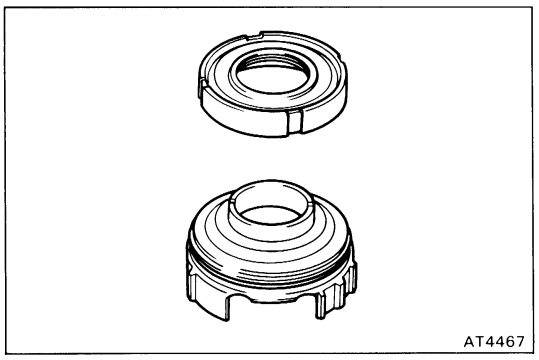

(e) Coat a new O-ring with ATF and install it on No. 2 piston.

(f) Install No. 1 piston with reaction sleeve onto No. 2 piston.

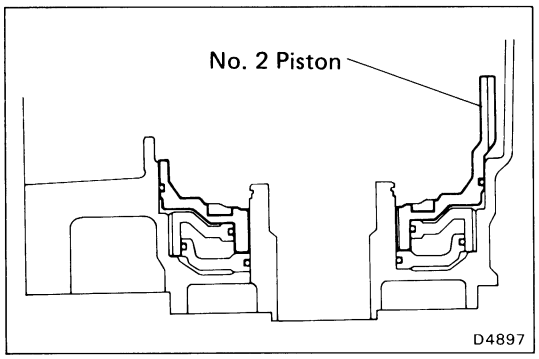

(g) Align the teeth of No. 2 piston into the proper grooves.

(h) Being careful not to damage the O-rings, press in No. 2 and No. 1 first and reverse brake pistons into the transmission case.

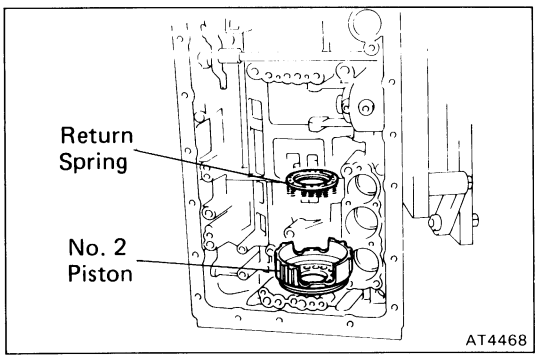

(i) Place the piston return spring onto No. 2 piston.

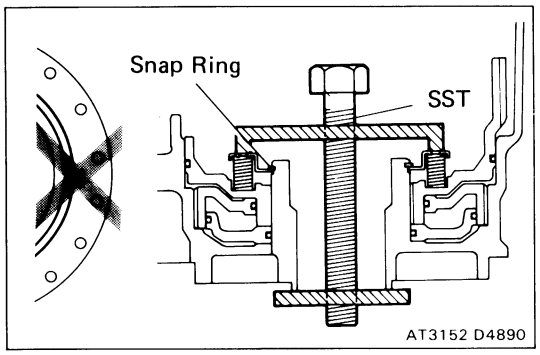

(j) Set SST as shown, and compress the return spring with SST.

SST 09350-30020 (09350-07050)

(k) Install the snap ring with a screwdriver. Be sure the end gap of the snap ring is not aligned with the spring retainer claw.

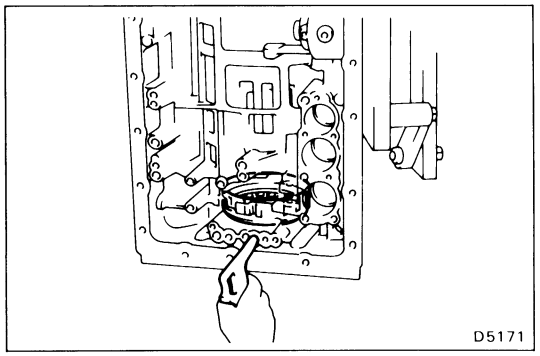

3. CHECK FIRST AND REVERSE BRAKE PISTONS MOVING

Make sure the first and reverse brake pistons move smoothly when applying and releasing the compressed air into the transmission case.

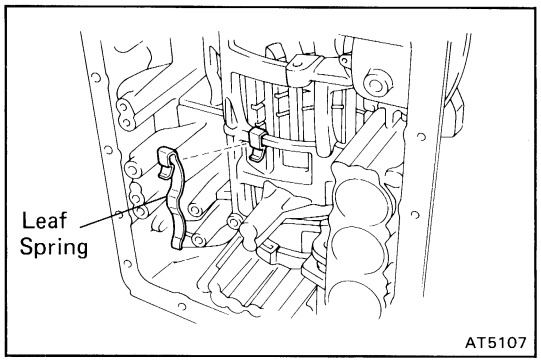

4. INSTALL LEAF SPRING

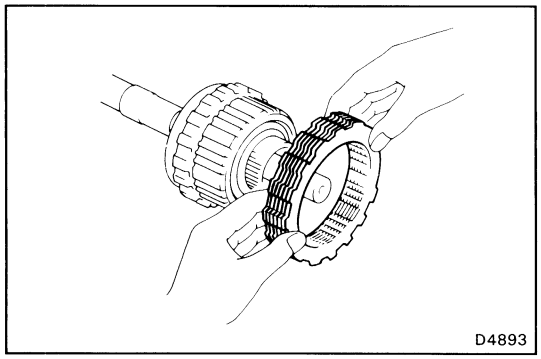

5. INSTALL REAR PLANETARY GEAR UNIT WITH SECOND BRAKE DRUM, FIRST AND REVERSE BRAKE PACK AND OUTPUT SHAFT

(a) Re-install the original flange, the rounded edge facing forward.

(b) Install the plates and discs.

Install in order: P = Plate D = Disc
7M-GE: D–P–D–P–D–P–D–P–D–P–D–P
7M-GTE: D–P–D–P–D–P–D–P–D–P–D–P–D–P

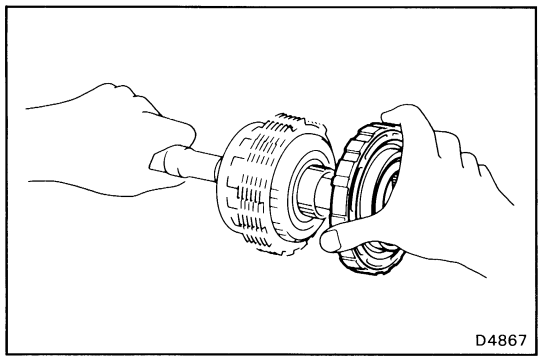

(c) Install the second brake drum assembly.

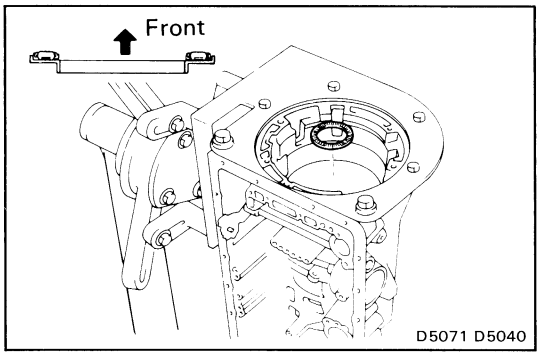

(d) Coat the assembled bearing and race with petroleum jelly and install it onto the case.

HINT: Assembled bearing and race diameter

mm (in.)

	Inside	Outside
Bearing and Race	39.2 (1.543)	57.7 (2.272)

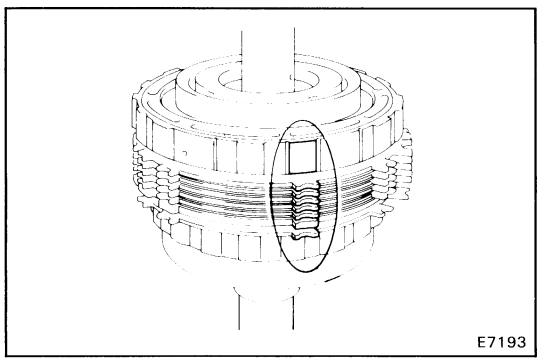

(e) Align the teeth of the second brake drum, flange, discs and plates as shown in the figure.

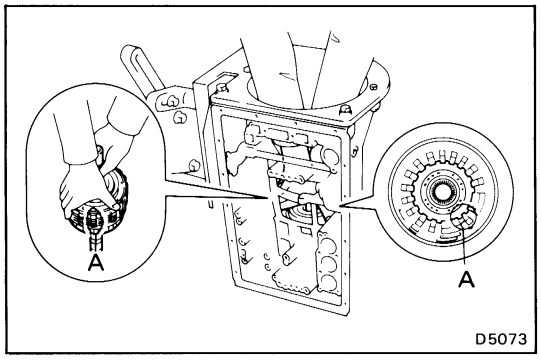

(f) Align the splines of the transmission case and the assembled rear planetary gear, second brake drum, first and reverse brake pack and output shaft, indicated by A.

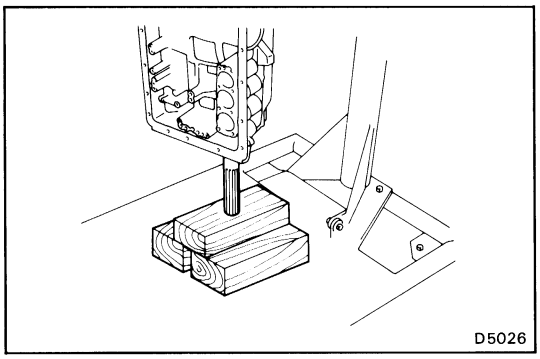

(g) Hold the output shaft with wooden blocks.

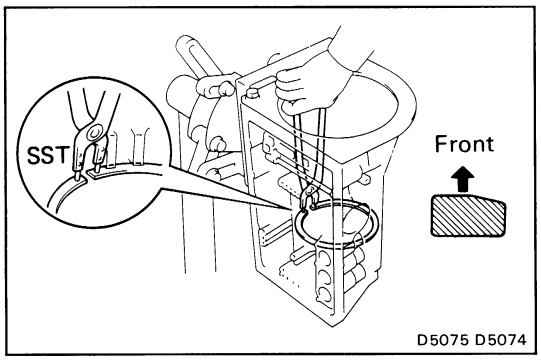

(h) Using SST, install the snap ring.

SST 09350-30020 (09350-07060)

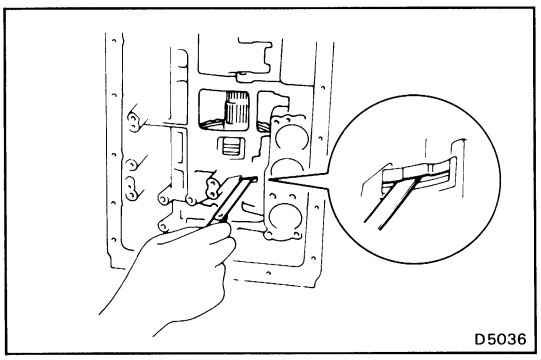

6. CHECK PACK CLEARANCE OF FIRST AND REVERSE BRAKE

Using a thickness gauge, measure the clearance between the plate and second brake drum as shown in the figure.

Clearance:

7M-GE 0.60 — 1.12 mm (0.0236 — 0.0441 in.)
7M-GTE 0.70 — 1.22 mm (0.0276 — 0.0480 in.)

If the values are nonstandard, select another flange.

HINT: There are six different thicknesses for the flange.

Flange thickness mm (in.)

No.	Thickness	No.	Thickness
50	5.0 (0.197)	53	4.4 (0.173)
51	4.8 (0.189)	54	4.2 (0.165)
52	4.6 (0.181)	55	4.0 (0.157)

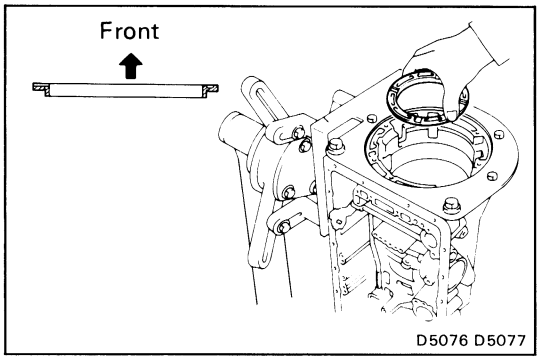

7. INSTALL SECOND BRAKE PISTON SLEEVE

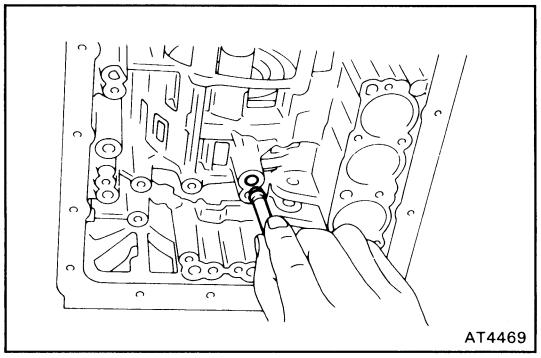

8. INSTALL NEW BRAKE DRUM GASKET

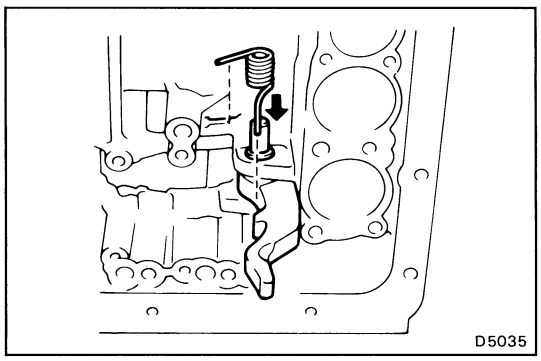

9. INSTALL PARKING LOCK PAWL AND ROD

(a) Install the E-ring to the shaft.

(b) Install the parking lock pawl, shaft and spring.

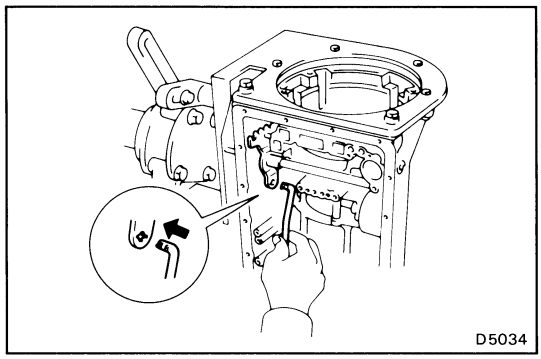

(c) Connect the parking lock rod to the manual valve lever.

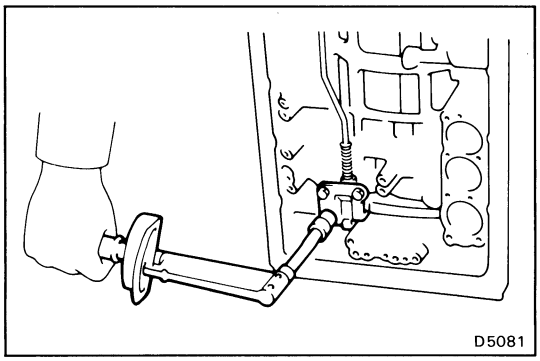

(d) Install the parking lock pawl bracket and torque the bolts.

Torque: 75 kg-cm (65 in.-lb, 7.4 N·m)

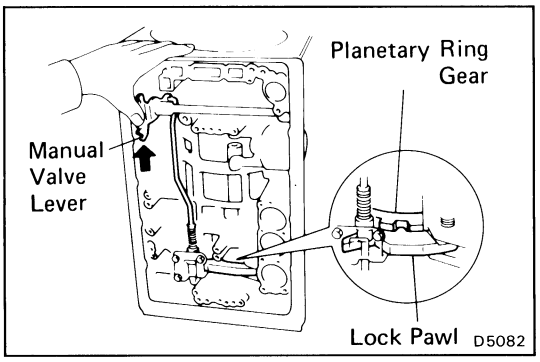

(e) Shift the manual valve lever to the P position, and confirm the planetary ring gear is correctly locked up by the lock pal.

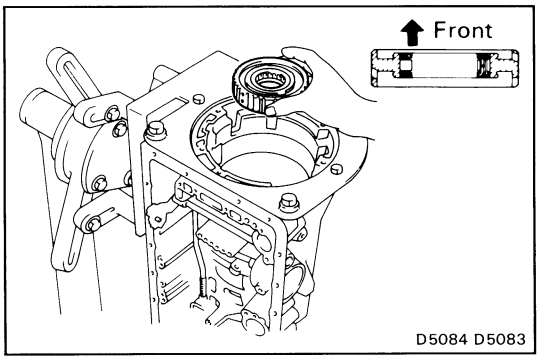

10. INSTALL NO.1 ONE-WAY CLUTCH

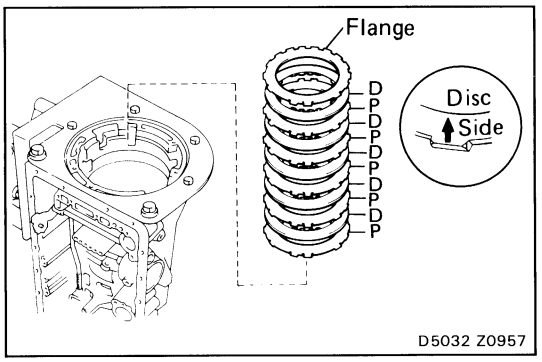

11. INSTALL FLANGE, PLATES AND DISCS OF SECOND BRAKE

(a) Install the 1.8 mm (0.071 in.) thick plate with the rounded edge side of the plate facing the disc.

(b) Install the plates and discs.

Install in order: P = Plate D = Disc

P—D—P—D—P—D—P—D—P—D

(c) Install the flange with the rounded edge of the flange facing the disc.

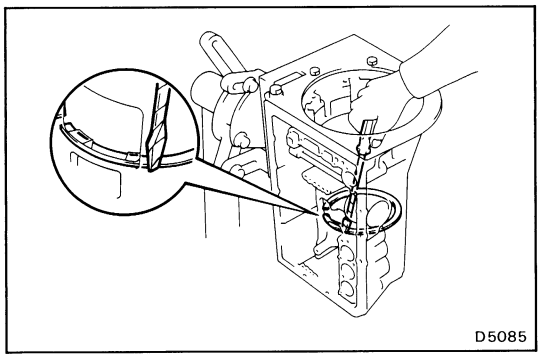

(d) Install the snap ring.

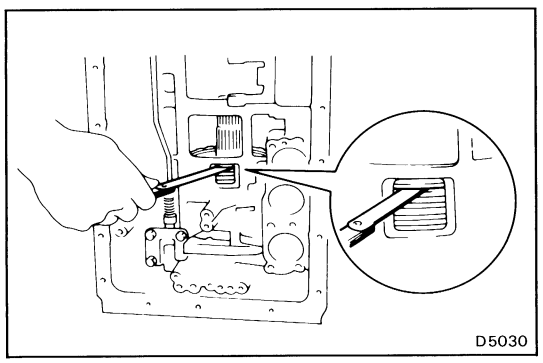

12. CHECK PACK CLEARANCE OF SECOND BRAKE

Using a thickness gauge, measure the clearance between the snap ring and flange as shown in the figure.

Clearance: 0.62 — 1.98 mm (0.0244 — 0.0780 in.)

If the values are nonstandard, check for an improper installation.

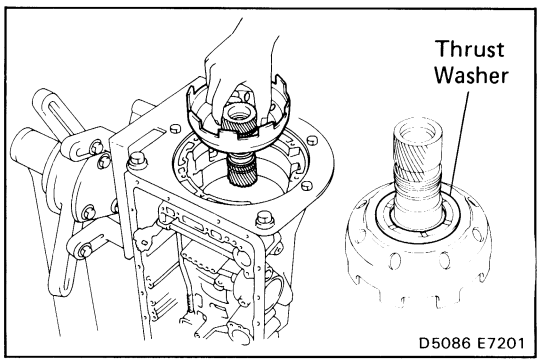

13. INSTALL PLANETARY SUN GEAR

While turning the planetary sun gear clockwise, install it into No.1 one-way clutch.

HINT: Confirm the thrust washer is installed correctly.

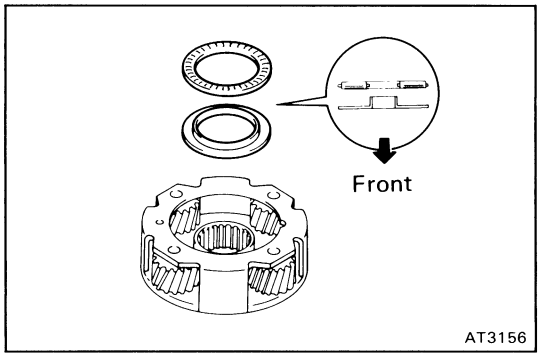

14. INSTALL FRONT PLANETARY GEAR

(a) Coat the bearing and race with petroleum jelly and install them onto the front planetary gear.

mm (in.)

	Inside	Outside
Bearing	35.5 (1.398)	47.7 (1.878)
Race	33.7 (1.327)	47.6 (1.874)

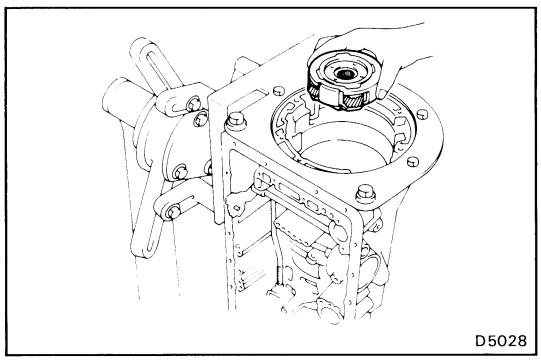

(b) Install the front planetary gear to the sun gear.

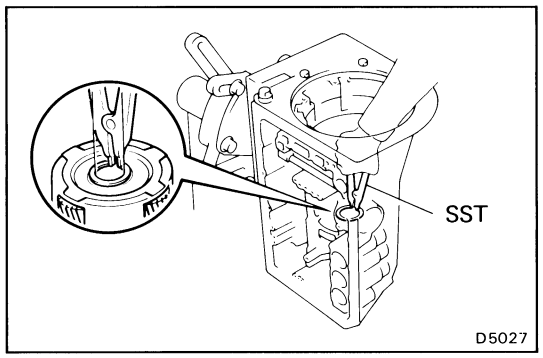

(c) Using SST, install the snap ring.

SST 09350-30020 (09350-07070)

(d) Remove the wooden blocks under the output shaft.

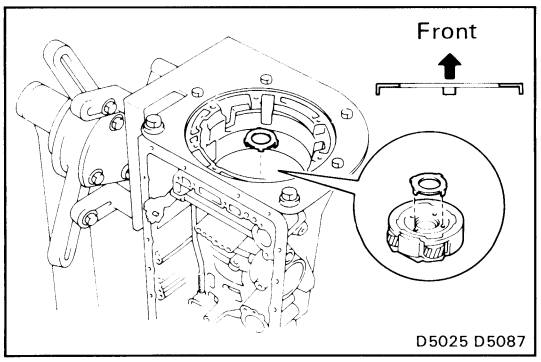

(e) Coat the bearing race with petroleum jelly and install it onto the front planetary gear.

HINT: Race diameter

mm (in.)

	Inside	Outside
Race	34.3 (1.350)	47.8 (1.882)

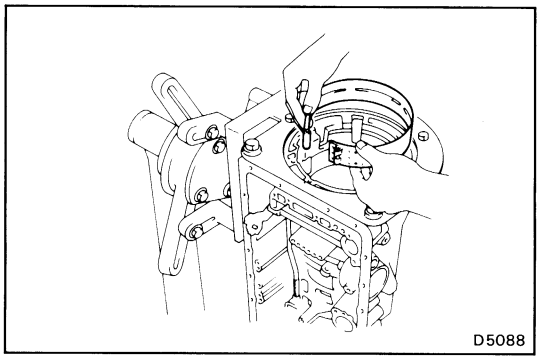

15. INSTALL SECOND COAST BRAKE BAND

(a) Insert the second coast brake band to the case.

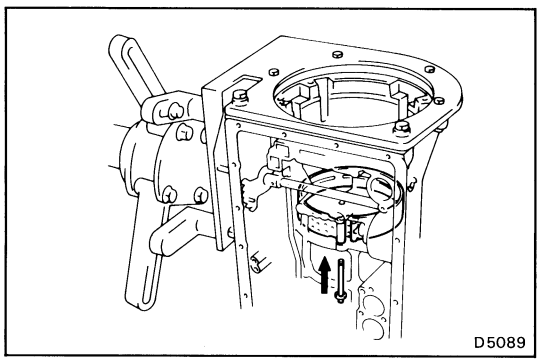

(b) Install the pin through the brake band.

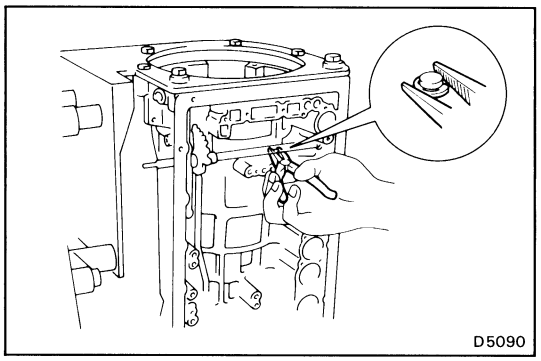

(c) Install the E-ring to the pin.

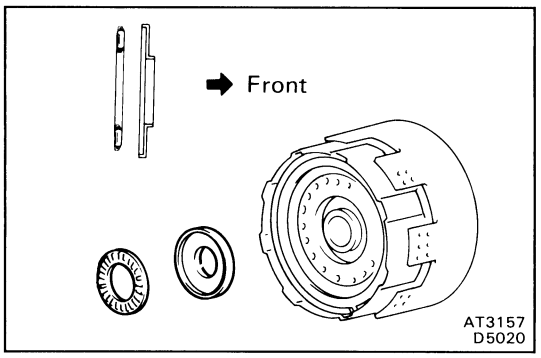

16. INSTALL FRONT PLANETARY RING GEAR TO FORWARD AND DIRECT CLUTCH

(a) Coat the bearing and race with petroleum jelly and install them onto the forward clutch.

HINT: Bearing and race diameter

mm (in.)

	Inside	Outside
Bearing	26.0 (1.024)	46.7 (1.839)
Race	26.0 (1.024)	48.9 (1.925)

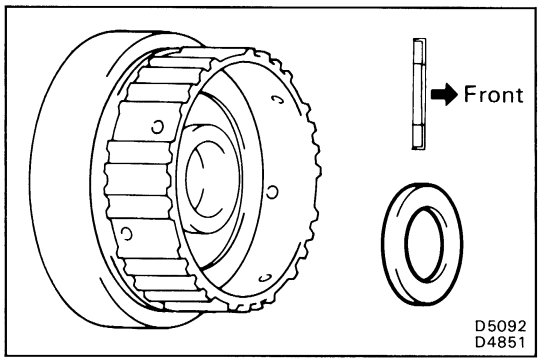

(b) Coat the race with petroleum jelly and install it onto the front planetary ring gear.

HINT: Race diameter

mm (in.)

	Inside	Outside
Race	26.8 (1.055)	47.0 (1.850)

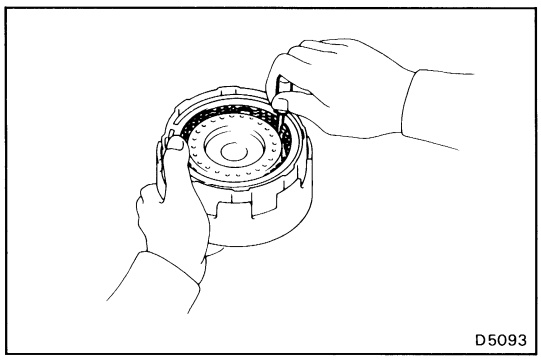

(c) Align the flukes of the discs in the forward clutch.

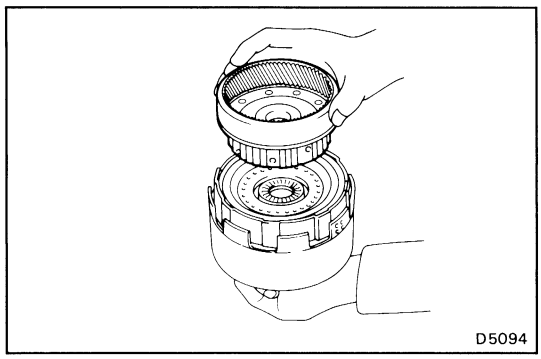

(d) Align the splines of the front planetary ring gear with the flukes of the discs and install the front planetary ring gear to the forward clutch.

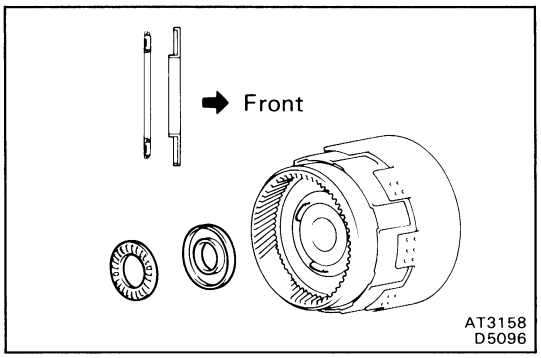

17. INSTALL ASSEMBLED DIRECT CLUTCH, FORWARD CLUTCH AND FRONT PLANETARY RING GEAR INTO CASE

(a) Coat the bearing and race with petroleum jelly and install them onto the ring gear.

HINT: Bearing and race diameter

mm (in.)

	Inside	Outside
Bearing	32.6 (1.283)	47.7 (1.878)
Race	30.6 (1.205)	53.6 (2.110)

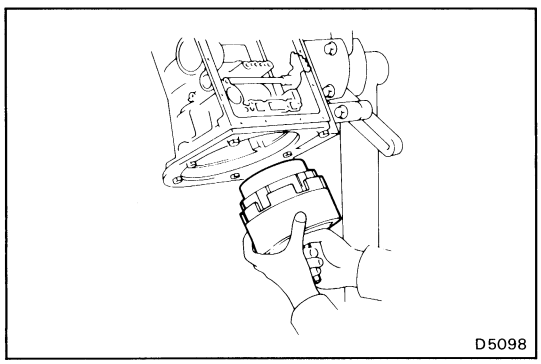

(b) Install the assembled direct clutch, forward clutch and front planetary ring gear into the transmission case.

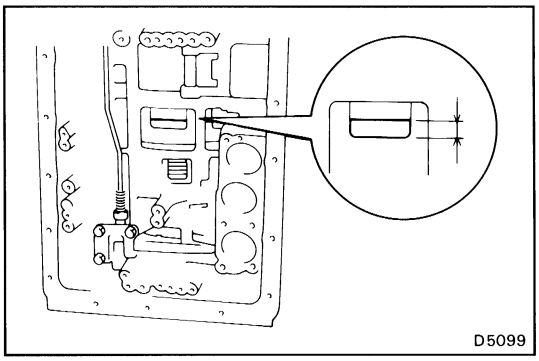

(c) Using vernier calipers, measure the distance between the sun gear input drum and direct clutch drum as shown in the figure.

Height: 9.8 — 11.8 mm (0.386 — 0.465 in.)

If the values are nonstandard, check for an improper installation.

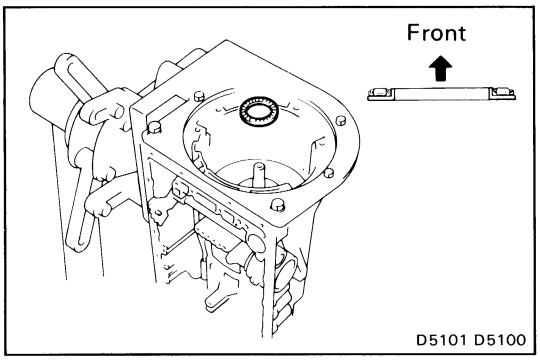

(d) Coat the assembled bearing and race with petroleum jelly and install it onto the forward clutch.

HINT: Assembled bearing and race diameter

mm (in.)

	Inside	Outside
Bearing and Race	33.7 (1.327)	47.6 (1.874)

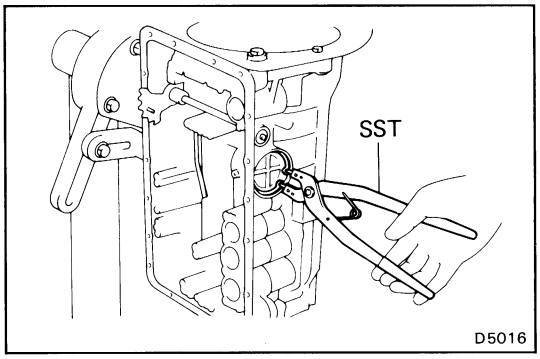

18. INSTALL SECOND COAST BRAKE COVER, PISTON ASSEMBLY AND SPRING

(a) Coat two new O-rings with ATF and install them to the cover.

(b) Install the spring, piston assembly and cover to the case.

(c) Using SST, install the snap ring.

SST 09350-30020 (09350-07060)

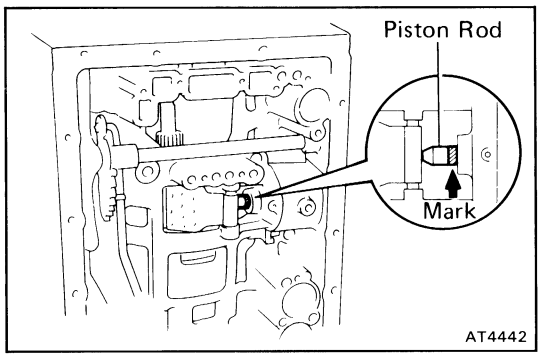

19. CHECK PISTON ROD STROKE OF SECOND COAST BRAKE

(a) Place a mark on the second coast brake piston rod as shown in the figure.

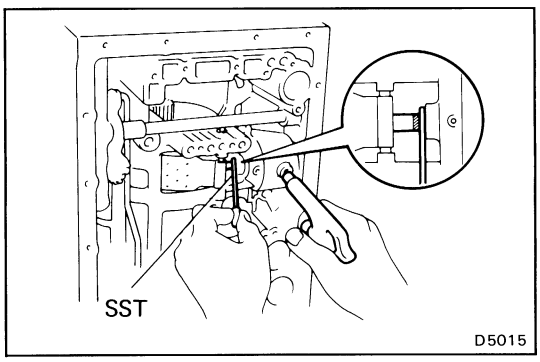

(b) Using SST, measure the stroke applying the compressed air (4 — 8 kg/cm^2, 57 — 114 psi or 392 — 785 kPa) as shown in the figure.

SST 09240-00020

Piston rod stroke: 1.5 — 3.0 mm (0.059 — 0.118 in.)

If it is still more than standard value, replace the brake band with a new one.

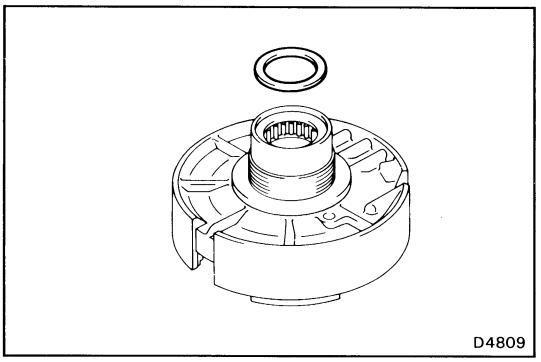

20. INSTALL OVERDRIVE SUPPORT ASSEMBLY

(a) Coat the race with petroleum jelly and install it onto the overdrive support assembly.

HINT: Race diameter

mm (in.)

	Inside	Outside
Race	36.8 (1.449)	50.9 (2.004)

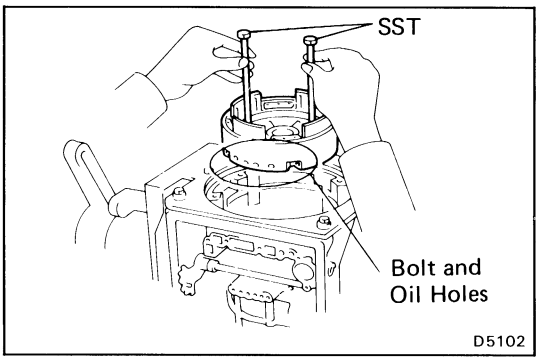

(b) Using two bolts of SST, aim the bolt and oil holes of the overdrive support toward the valve body side, and align them with the bolt holes of the transmission case and insert.

SST 09350-30020 (09350-07020)

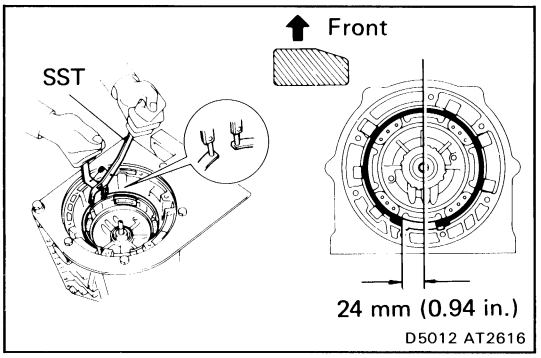

(c) Using SST, install the snap ring as shown in the figure.

SST 09350-30020 (09350-07060)

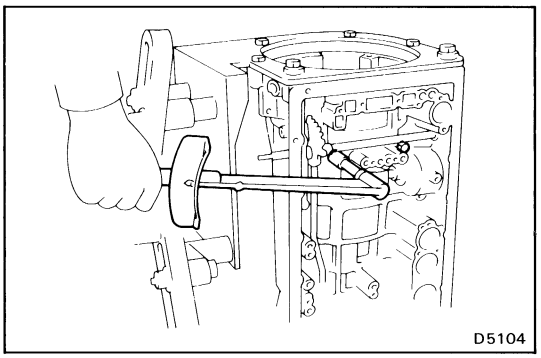

(d) Install and torque the two bolts.

Torque: 260 kg-cm (19 ft-lb, 25 N·m)

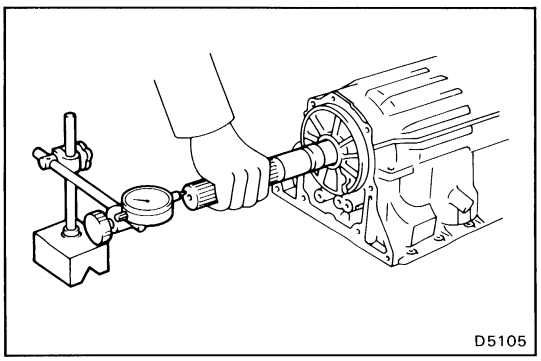

21. CHECK OUTPUT SHAFT

(a) Using a dial indicator, measure the end play of the output shaft with hand.

End play: 0.27 — 0.86 mm (0.0106 — 0.0339 in.)

If the values are nonstandard, check for an improper installation.

(b) Check to see that output shaft rotates smoothly.

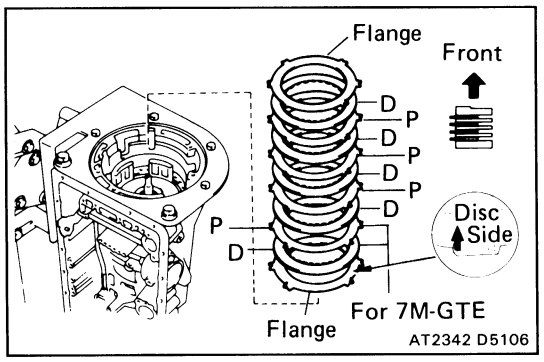

22. INSTALL FLANGES, PLATES AND DISCS OF OVERDRIVE BRAKE

(a) Install the 4.0 mm (0.157 in.) thick flange (flat ring) with the rounded edge side of the flange facing the disc.

(b) Install the plates and discs.

Install in order: P = Plate D = Disc
7M-GE: D—P—D—P—D—P—D
7M-GTE: D—P—D—P—D—P—D—P—D

(c) Install the flange (stepped ring) with the flat side of the flange facing the disc.

(d) Install the snap ring.

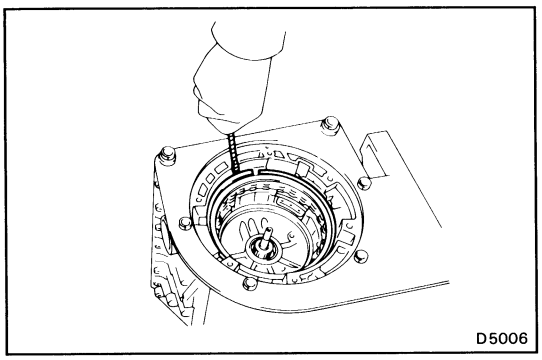

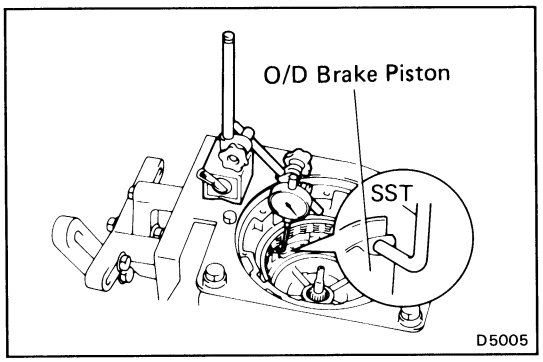

23. CHECK PISTON STROKE OF OVERDRIVE BRAKE

(a) Place SST and a dial indicator onto the overdrive brake piston as shown in the figure.

SST 09350-30020 (09350-06120)

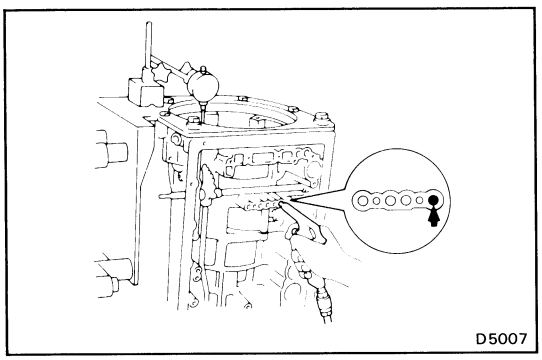

(b) Measure the stroke applying and releasing the compressed air (4 — 8 kg/cm², 57 — 114 psi or 392 — 785 kPa) as shown in the figure.

Piston stroke:
7M-GE: 1.40 — 1.70 mm (0.0551 — 0.0669 in.)
7M-GTE: 1.75 — 2.05 mm (0.0689 — 0.0807 in.)

If the piston stroke is less than the limit, parts may have been assembled incorrectly, check and reassemble again.

If the piston stroke is nonstandard, select another flange.

HINT: There are seven different thicknesses for the flange.

Flange thickness mm (in.)

No.	Thickness	No.	Thickness
26	3.3 (0.130)	11	3.8 (0.150)
25	3.5 (0.138)	23	3.9 (0.154)
12	3.6 (0.142)	None	4.0 (0.157)
24	3.7 (0.146)		

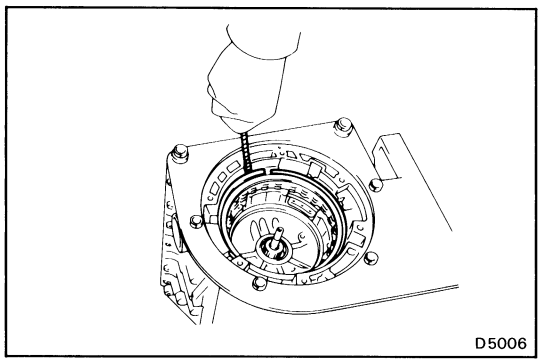

24. REMOVE FLANGES, PLATES AND DISCS OF OVERDRIVE BRAKE

(a) Remove the snap ring.

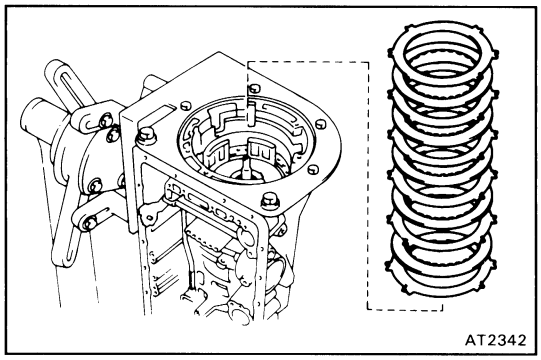

(b) Remove the flanges, plates and discs.

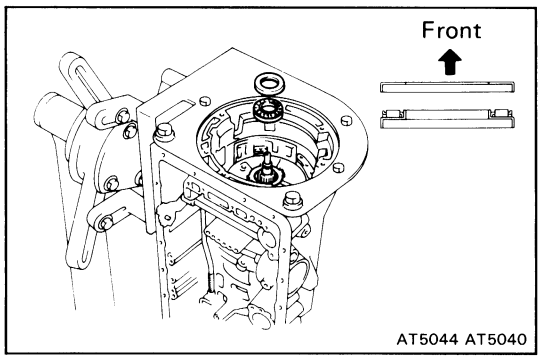

25. INSTALL OVERDRIVE GEAR UNIT WITH OVERDRIVE DIRECT CLUTCH AND ONE-WAY CLUTCH

(a) Coat the bearing and race with petroleum jelly and install them onto the overdrive support.

HINT: Bearing and race diameter

mm (in.)

	Inside	Outside
Bearing	33.7 (1.327)	51.1 (2.012)
Race	37.2 (1.465)	58.8 (2.315)

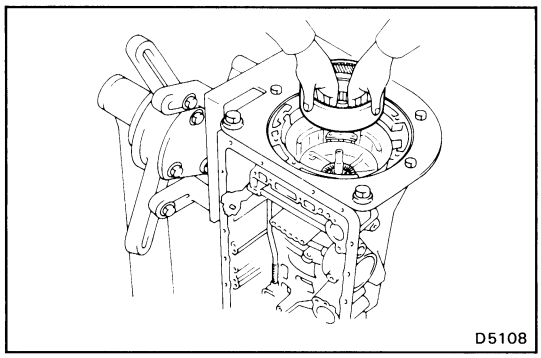

(b) Install the overdrive planetary ring gear.

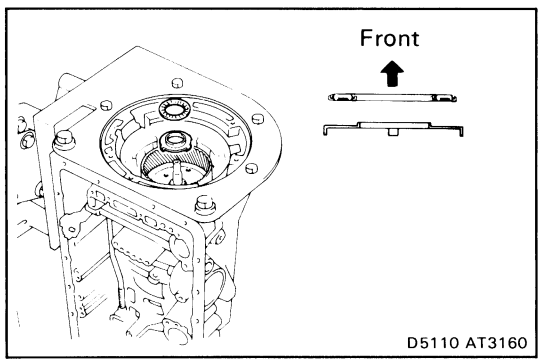

(c) Coat the bearing and race with petroleum jelly and install them onto the planetary ring gear.

HINT: Bearing and race diameter

mm (in.)

	Inside	Outside
Bearing	26.0 (1.024)	46.8 (1.843)
Race	24.2 (0.953)	47.8 (1.882)

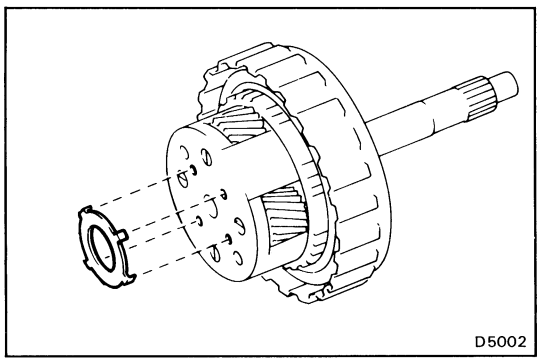

(d) Coat the race with petroleum jelly and install it onto the planetary gear.

HINT: Race diameter

mm (in.)

	Inside	Outside
Race	27.1 (1.067)	41.8 (1.646)

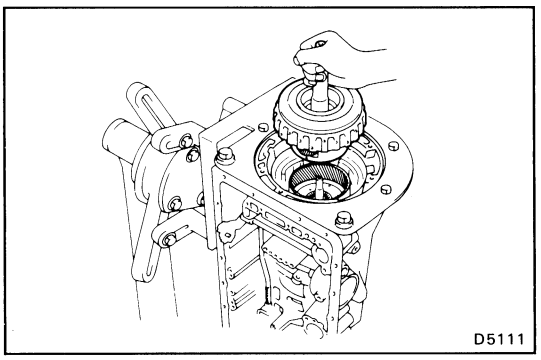

(e) Install the over drive planetary gear with the overdrive direct clutch and one-way clutch.

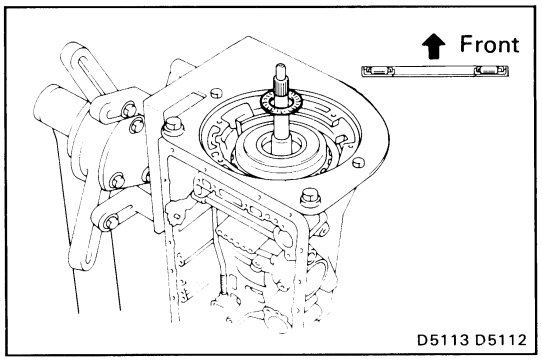

(f) Coat the assembled bearing and race with petroleum jelly and install it onto the O/D direct clutch.

HINT: Assembled bearing and race diameter

mm (in.)

	Inside	Outside
Bearing and Race	28.9 (1.138)	50.2 (1.976)

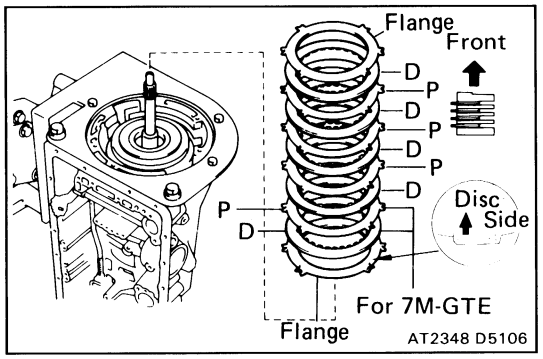

26. INSTALL FLANGES, PLATES AND DISCS OF OVERDRIVE BRAKE

(a) Install the 4.0 mm (0.157 in.) thick flange (flat ring) with the rounded edge side of the flange facing the disc.

(b) Install the plates and discs.

Install in order: P = Plate D = Disc
7M-GE: D—P—D—P—D—P—D
7M-GTE: D—P—D—P—D—P—D—P—D

(c) Install the flange (stepped ring) with the flat side of the flange facing the disc.

(d) Install the snap ring.

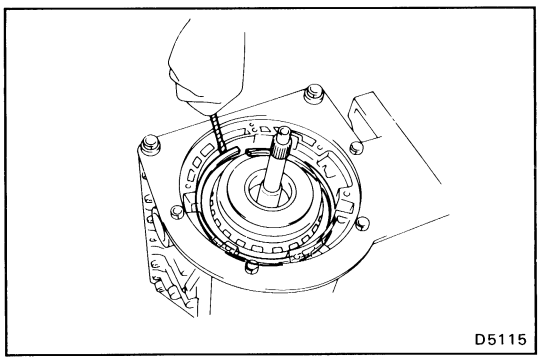

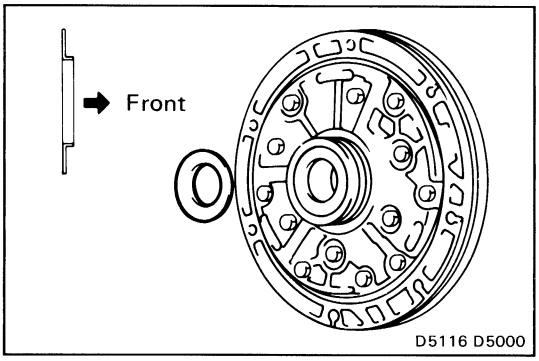

27. INSTALL OIL PUMP INTO CASE

(a) Coat the race with petroleum jelly and install it onto the oil pump.

HINT: Race diameter

mm (in.)

	Inside	Outside
Race	28.1 (1.106)	47.3 (1.862)

(b) Coat the new O-ring with ATF and install it around the pump body.

(c) Place the oil pump through the input shaft, and align the bolt holes of the pump body with the transmission case.

(d) Hold the input shaft, and lightly press the oil pump body to slide the oil seal rings into the O/D direct clutch drum.

NOTICE: Do not push on the oil pump strongly, or the oil seal ring will stick to the direct clutch drum.

(e) Install the seven bolts.

Torque: 220 kg-cm (16 ft-lb, 22 N·m)

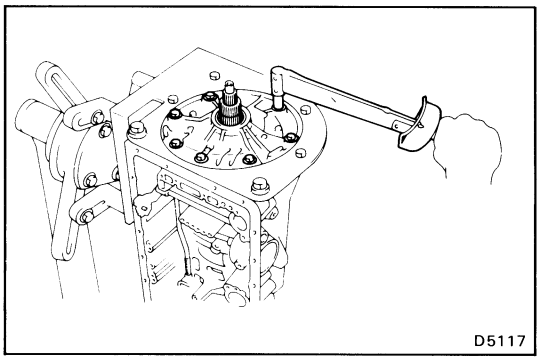

28. CHECK INPUT SHAFT ROTATION

Make sure the input shaft rotates smoothly.

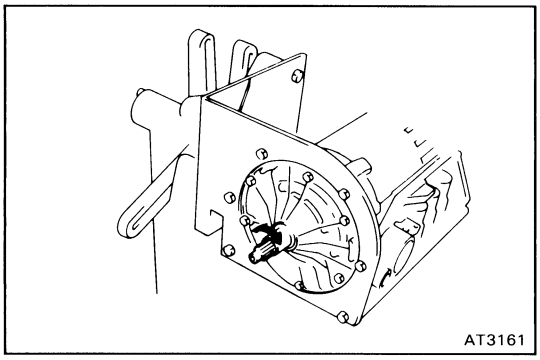

29. INSTALL THROTTLE CABLE

(a) Coat a new O-ring with ATF and install it to the cable.

(b) Install the cable to the case.

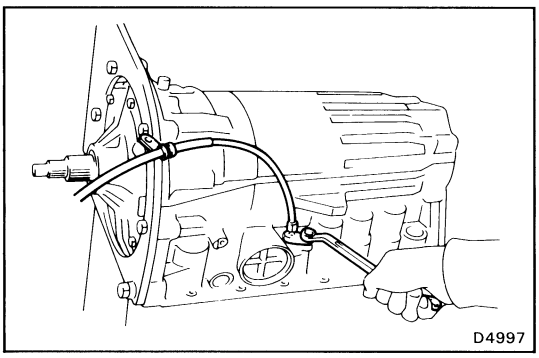

30. INDIVIDUAL PISTON OPERATION INSPECTION

Check for the sound of operation while applying compressed air into the oil hole indicated in the figure.

(1) O/D direct clutch
(2) Direct clutch
(3) Forward clutch
(4) O/D brake
(5) Second coast brake
(6) Second brake
(7) First and reverse brake

HINT: When inspecting the O/D direct clutch, check with the C_0 accumulator piston hole closed.

If there is no noise, disassemble and check the installation condition of the parts.

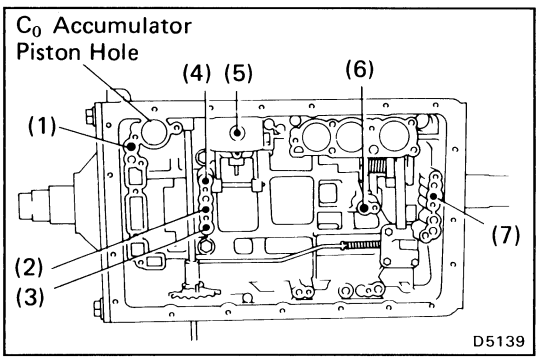

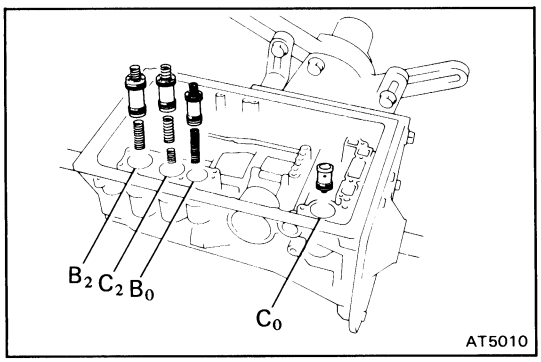

31. INSTALL ACCUMULATOR SPRINGS, PISTONS AND PINS

(a) Coat new O-rings with ATF and install them to the pistons.

(b) Install the four springs and four accumulator pistons to the bore as shown in the figure.

HINT: The pistons are marked in relief with either C_0, B_0, C_2 or B_2 to the discriminate between them.

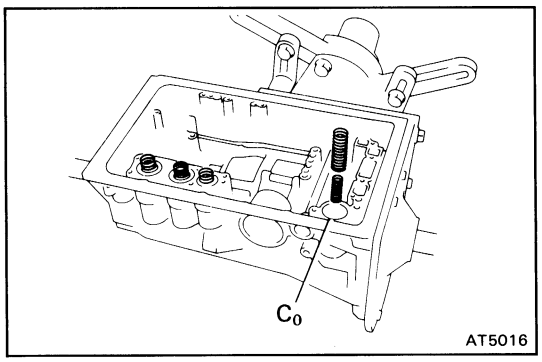

(c) Install the two springs to the C_0 accumulator piston.

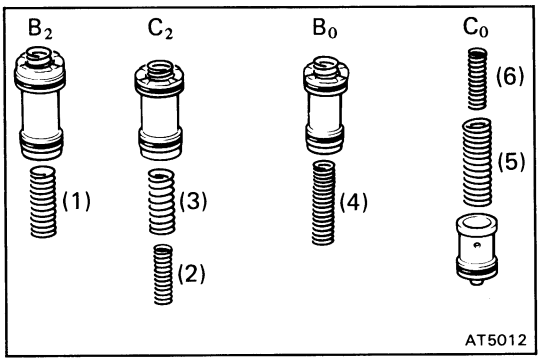

- **Spring** mm (in.)

Spring				Free length	Outer diameter	Color
(1)	B_2	7M-GE		73.4 (2.890)	19.9 (0.783)	Red
		7M-GTE		72.6 (2.858)	19.9 (0.783)	Light Gray
(2)	C_2	Inner		42.1 (1.657)	14.7 (0.579)	Pink
(3)		Outer	7M-GE	64.0 (2.520)	20.2 (0.795)	Green
			7M-GTE	70.3 (2.768)	20.2 (0.795)	Pink
(4)	B_0			62.0 (2.441)	16.0 (0.630)	Green
(5)	C_0	Outer		74.6 (2.937)	20.9 (0.823)	Orange
(6)		Inner		46.0 (1.811)	14.0 (0.551)	Yellow

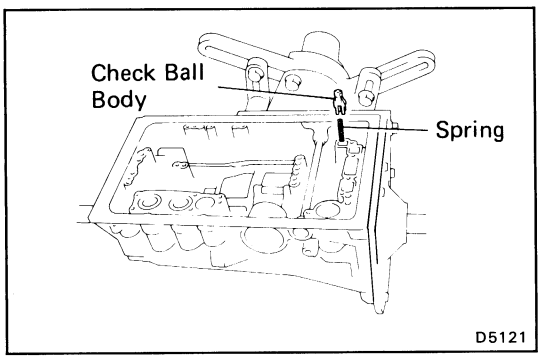

32. INSTALL CHECK BALL BODY AND SPRING

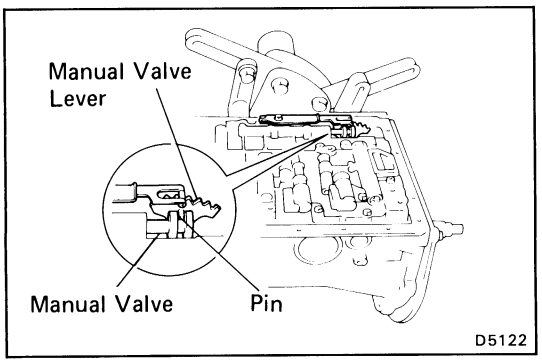

33. INSTALL VALVE BODY

(a) Align the groove of the manual valve to the pin of the lever.

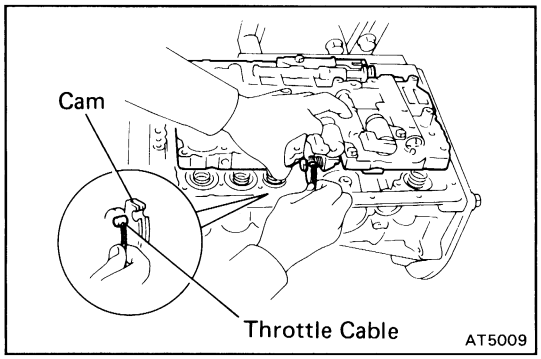

(b) Connect the throttle cable to the cam.

(c) Confirm the springs into the accumulator pistons are installed correctly.

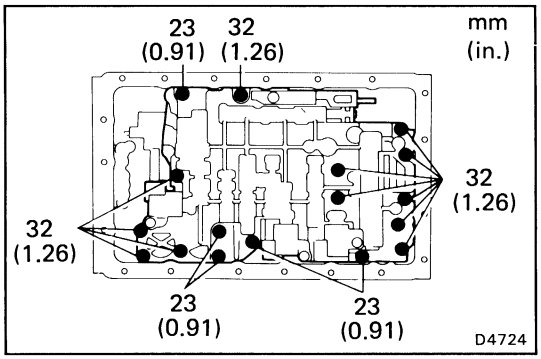

(d) Install the seventeen bolts.

HINT: Each bolt length (mm, in.) is indicated in the figure.

Torque: 100 kg-cm (7 ft-lb, 10 N·m)

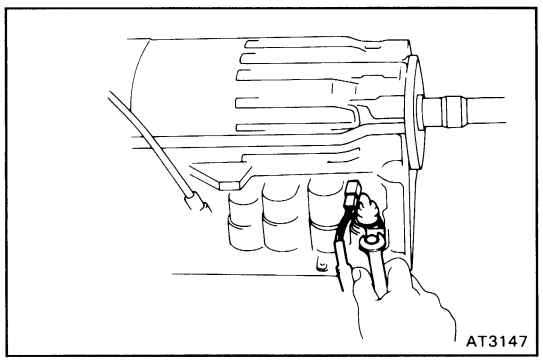

34. INSTALL SOLENOID WIRING

(a) Coat a new O-ring with ATF and install it to the grommet.

(b) Insert the solenoid wiring to the case and install the stopper plate.

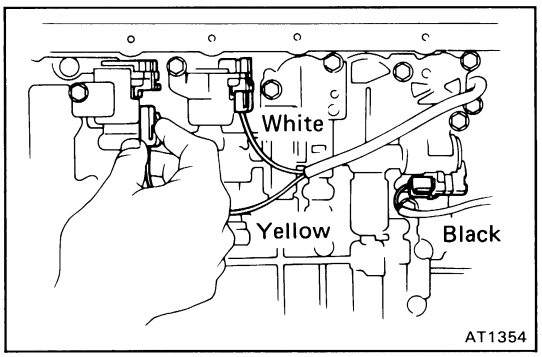

(c) Connect the connectors to No.1, No.2 and lock-up solenoid.

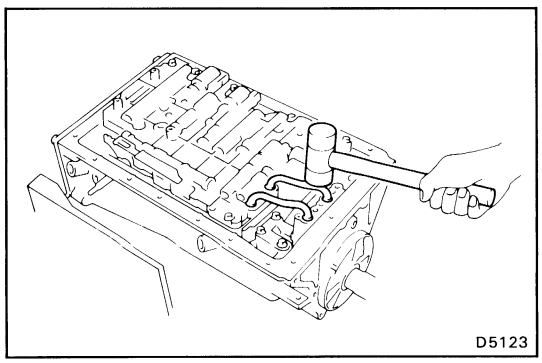

35. INSTALL OIL TUBES

Using a plastic hammer, install the two tubes into positions shown in the figure.

NOTICE: Be careful not to bend or damage the tubes.

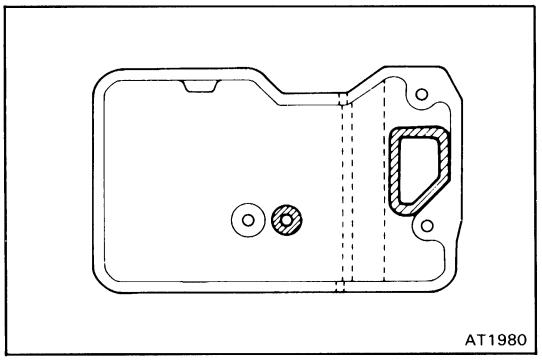

36. INSTALL OIL STRAINER AND GASKETS

(a) Install two new gaskets to the oil strainer.

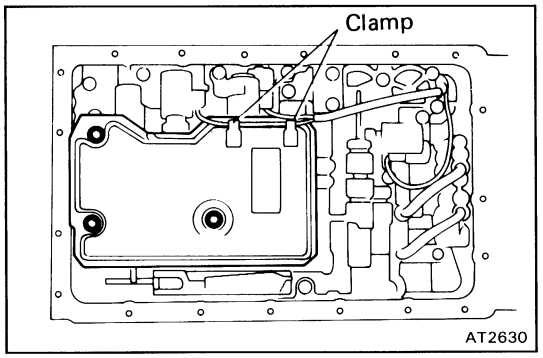

(b) Install and torque the three bolts.

Torque: 100 kg-cm (7 ft-lb, 10 N·m)

(c) Clamp the solenoid wire.

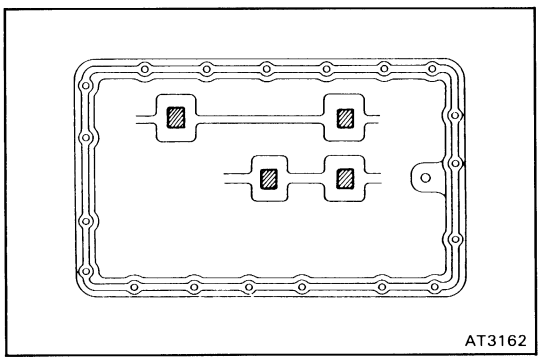

37. INSTALL MAGNETS IN PAN

Install the four magnets in the indentations of the oil pan as shown in the figure.

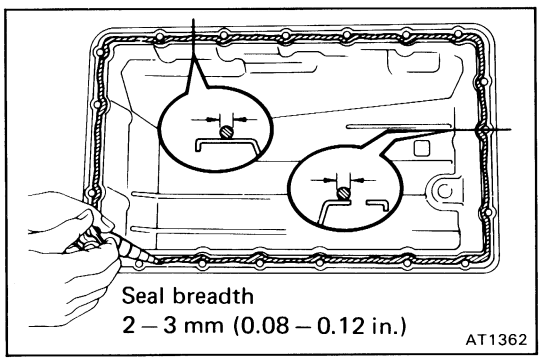

38. INSTALL OIL PAN

(a) Remove any packing material and be careful not to drop oil on the contacting surfaces of the transmission case and oil pan.

(b) Apply seal packing to the oil pan as shown in the figure.

Seal packing: Part No. 08826-00090, THREE BOND 1281 or equivalent

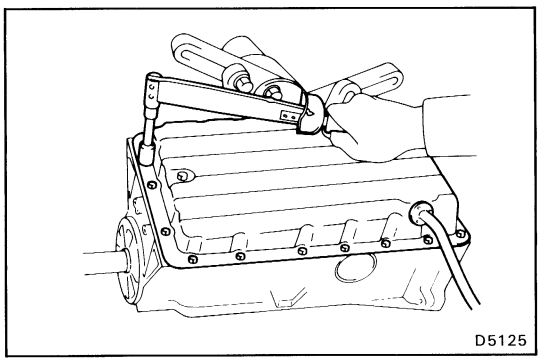

(c) Install and torque the nineteen bolts.

Torque: 75 kg-cm (65 in.-lb, 7.4 N·m)

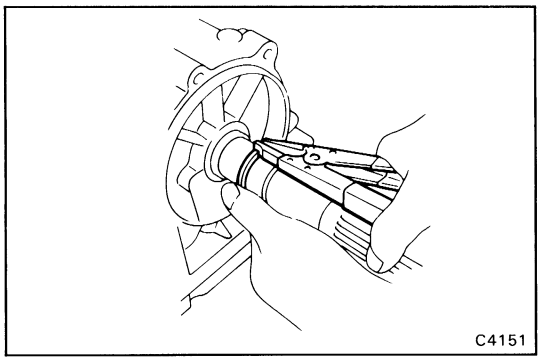

39. INSTALL SENSOR ROTOR AND KEY

(a) Using snap ring pliers, install the snap ring.

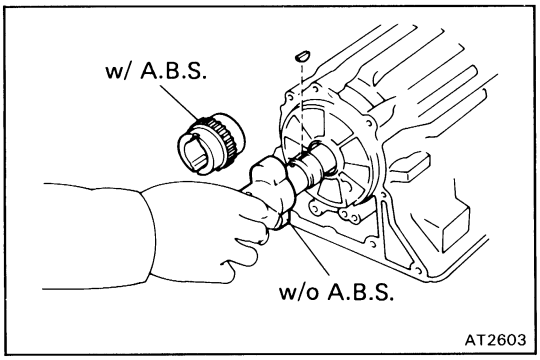

(b) Install the key on the output shaft.

(c) Align the groove of the sensor rotor with the key, install the sensor rotor.

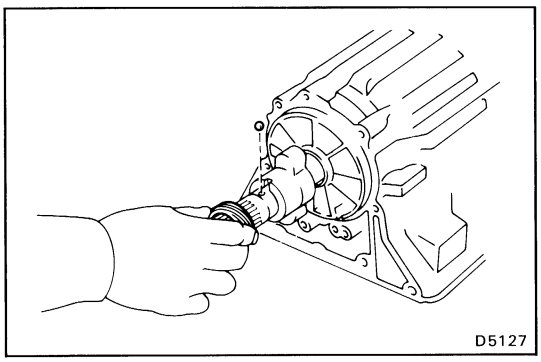

40. INSTALL SPEEDOMETER DRIVE GEAR AND BALL

(a) Install the lock ball on the output shaft.

(b) Align the groove of the drive gear with the ball, install the drive gear.

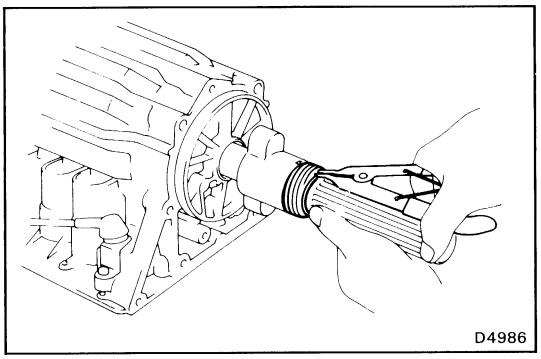

(c) Using snap ring pliers, install the snap ring.

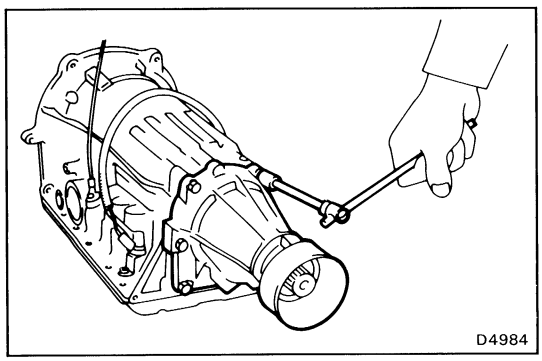

41. INSTALL EXTENSION HOUSING AND NEW GASKET

Install the extension housing with a new gasket to the case.

Install and torque the six bolts.

HINT: The two lower bolts are shorter.

Torque: 370 kg-cm (27 ft-lb, 36 N·m)

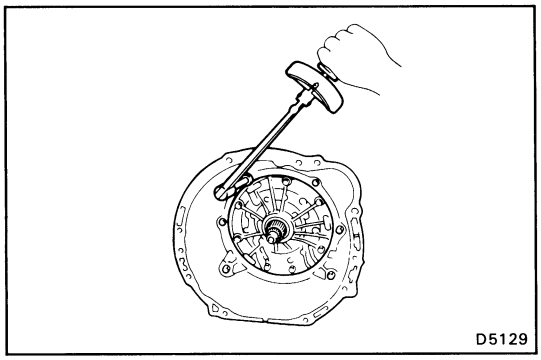

42. INSTALL TRANSMISSION HOUSING

Install and torque the six bolts.

Torque: 10 mm Bolt 345 kg-cm (25 ft-lb, 34 N·m)
12 mm Bolt 580 kg-cm (42 ft-lb, 57 N·m)

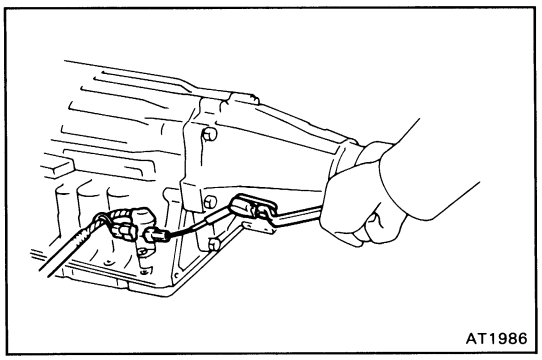

43. INSTALL SPEED SENSOR

(a) Coat a new O-ring with ATF and install it to the speed sensor.

(b) Install the speed sensor. Install and torque the bolt.

Torque: 160 kg-cm (12 ft-lb, 16 N·m)

(c) Connect the connector.

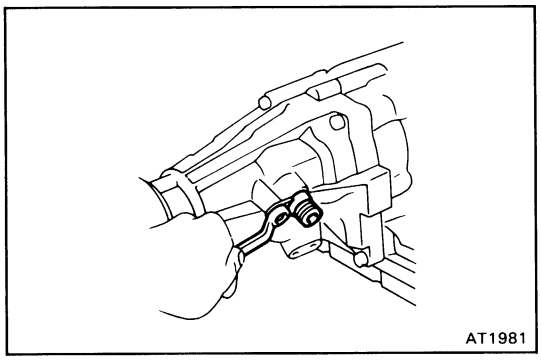

44. INSTALL SPEEDOMETER DRIVEN GEAR

(a) Coat a new O-ring with ATF and install it to the speedometer driven gear.

(b) Install the speedometer driven gear. Install and torque the bolt.

Torque: 160 kg-cm (12 ft-lb, 16 N·m)

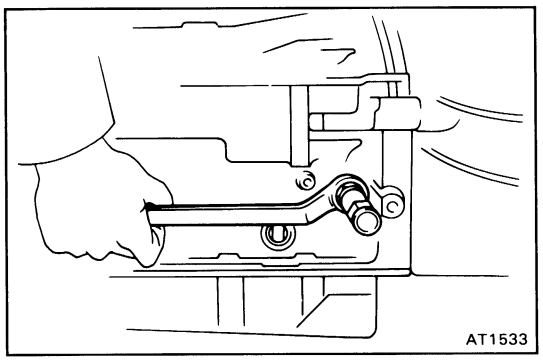

45. INSTALL UNIONS

(a) Coat new two O-rings with ATF and install them to each union.

(b) Install the front union.

Torque: 300 kg-cm (22 ft-lb, 29 N·m)

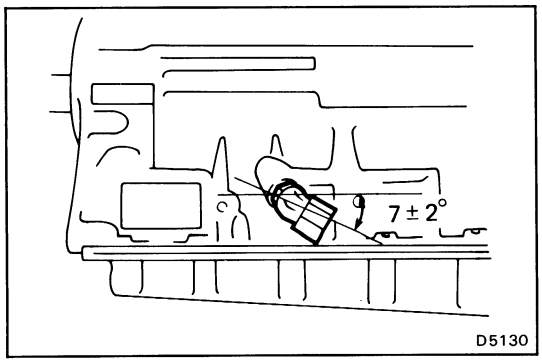

(c) Install the rear union as shown in the figure.

Torque: 300 kg-cm (22 ft-lb, 29 N·m)

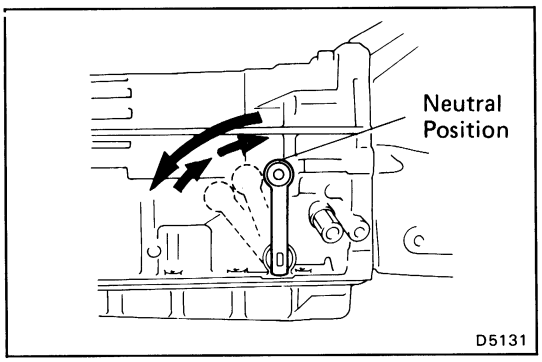

46. INSTALL NEUTRAL START SWITCH

(a) Using the control shaft lever, fully turn the manual lever shaft back and return two notches. it is now in neutral.

(b) Insert the neutral start switch onto the manual valve lever shaft and temporarily tighten the adjusting bolt.

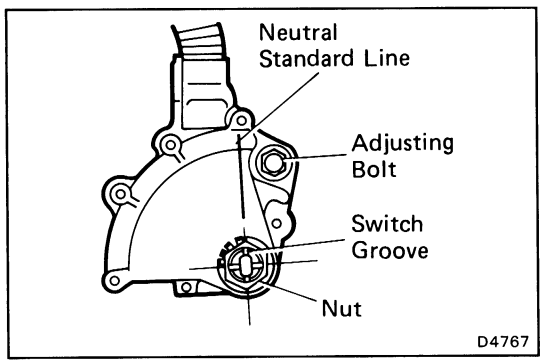

(c) Install the grommet and a new lock washer. Install and torque the nut.

Torque: 70 kg-cm (61 in.-lb, 6.9 N·m)

(d) Align the neutral standard line and the switch groove, and tighten the adjusting bolt.

Torque: 130 kg-cm (9 ft-lb, 13 N·m)

(e) Bend the tabs of the lock washer.

HINT: Bend at least two of the lock washer tabs.

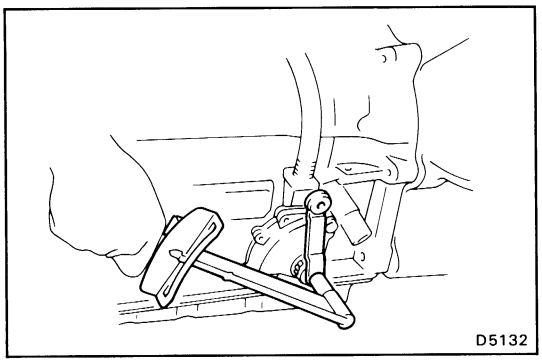

47. INSTALL CONTROL SHAFT LEVER

Torque: 160 kg-cm (12 ft-lb, 16 N·m)

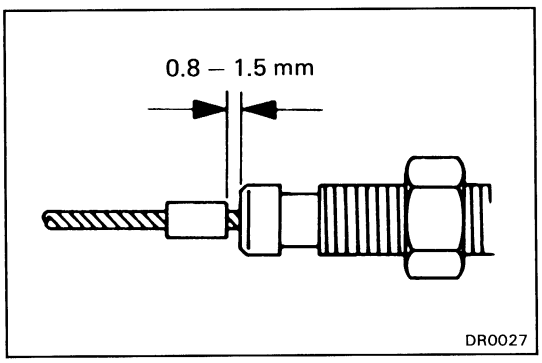

48. IF THROTTLE CABLE IS NEW, STAKE STOPPER ON INNER CABLE

HINT: New cable does not have a cable stopper staked.

(a) Bend the cable so there is a radius of about 200 mm (7.78 in.).

(b) Pull the inner cable lightly until a slight resistance is felt, and hold it.

(c) Stake the stopper, 0.8 — 1.5 mm (0.031 — 0.059 in.) from the end of outer cable.

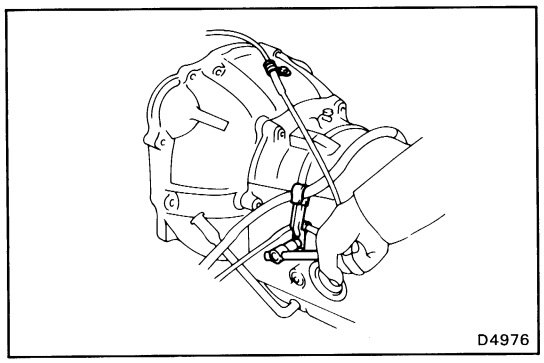

49. INSTALL WIRE HARNESS CLAMP AND THROTTLE CABLE CLAMP

SHIFT LOCK SYSTEM

COMPONENT AND CIRCUIT

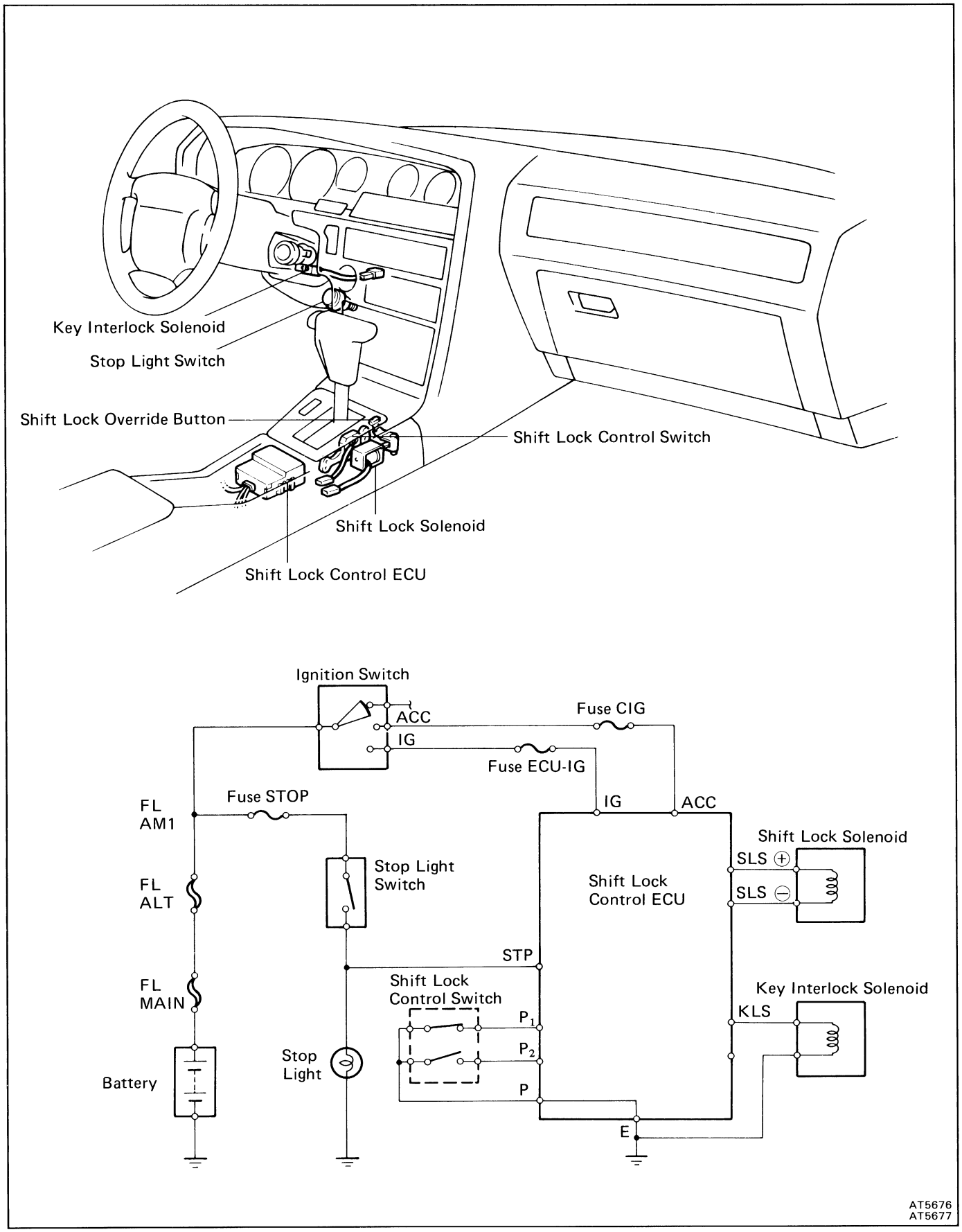

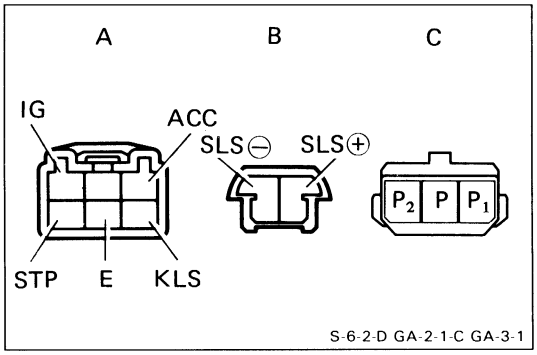

INSPECTION OF ELECTRIC CONTROL COMPONENTS

1. INSPECT SHIFT LOCK CONTROL ECU

Using a voltmeter, measure the voltage at each terminals.

Connector	Terminal	Measuring Condition	Voltage (V)
A	ACC – E	IG SW ACC position	10 – 14
	IG – E	IG SW ON position	10 – 14
	STP – E	Depress brake pedal	10 – 14
	KLS – E	① IG SW ACC position and P range	0
		② P → R, N, D, 2, L ranges	10 – 14
		③ ↑ (Approx. after one second)	6 – 9
B	SLS⊕ – SLS⊖	① IG SW ON position and P range	0
		② Depress brake pedal	8.5 – 13.5
		③ ↑ (Approx. after 20 seconds)	5.5 – 9.5
		④ P → R, N, D, 2, L ranges or release brake pedal	0
C	P_1 – P	① IG SW ON, P range and depress brake pedal	0
		② P → R, N, D, 2, L ranges	9 – 13.5
	P_2 – P	① IG SW ACC position and P range	9 – 13.5
		② P → R, N, D, 2, L ranges	0

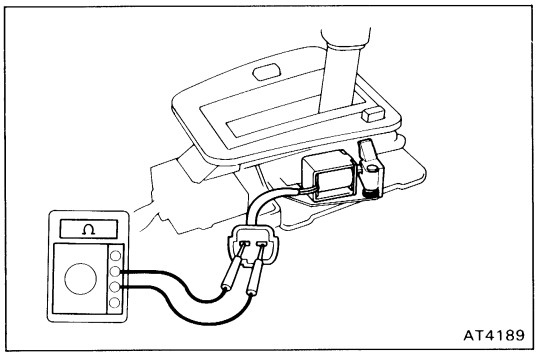

2. INSPECT SHIFT LOCK SOLENOID

(a) Disconnect the solenoid connector.

(b) Using an ohmmeter, measure the resistance between terminals.

Standard resistance: 20 – 28 Ω

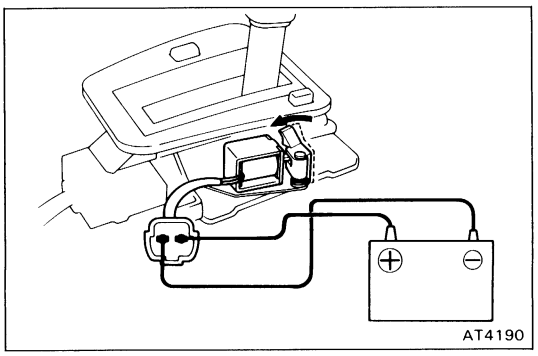

(c) Apply the battery voltage between terminals. At this time, confirm that a solenoid operation.

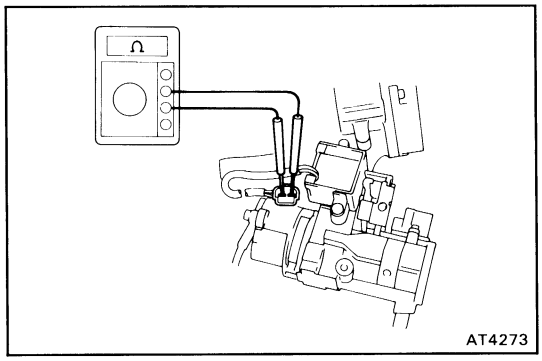

3. INSPECT KEY INTERLOCK SOLENOID

(a) Disconnect the solenoid connector.

(b) Using an ohmmeter, measure the resistance between terminals.

Standard resistance: 12 — 17 Ω

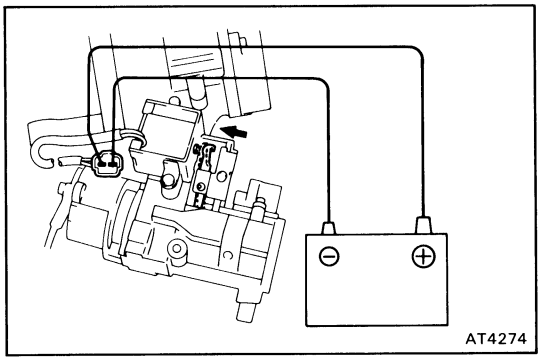

(c) Apply the battery voltage between terminals. At this time, confirm that a solenoid operation.

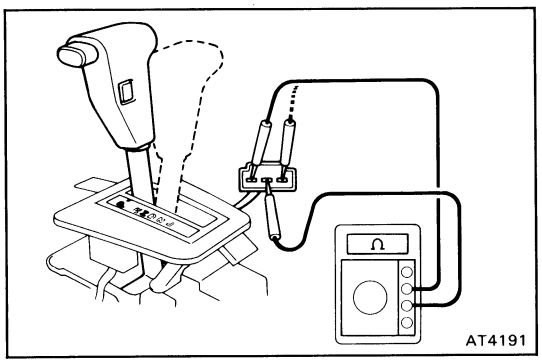

4. INSPECT SHIFT LOCK CONTROL SWITCH

Inspect that there is continuity between each terminals.

O—O : Continuity

Shift Position \ Terminal	P	P_1	P_2
P range (Release button is not pushed)	O—O		
R, N, D, 2, L ranges	O		O

PROPELLER SHAFT

	Page
PRECAUTIONS	PR-2
TROUBLESHOOTING	PR-2
PROPELLER SHAFT	PR-3

PRECAUTIONS

Be careful not to grip the propeller shaft tube too tightly in the vise as this will cause deformation.

TROUBLESHOOTING

Problem	Possible cause	Remedy	Page
Noise	Sleeve yoke spline worn	Replace sleeve yoke	PR-5
	Center bearing worn	Replace center bearing	PR-4
	Spider bearing worn or stuck	Replace spider bearing	PR-5
Vibration	Propeller shaft runout	Replace propeller shaft	PR-4
	Propeller shaft imbalance	Balance propeller shaft	
	Transmission extension housing bushing worn	Replace extension housing	MT-11, 51
	Sleeve yoke spline stuck	Replace sleeve yoke	PR-5

PROPELLER SHAFT

COMPONENTS

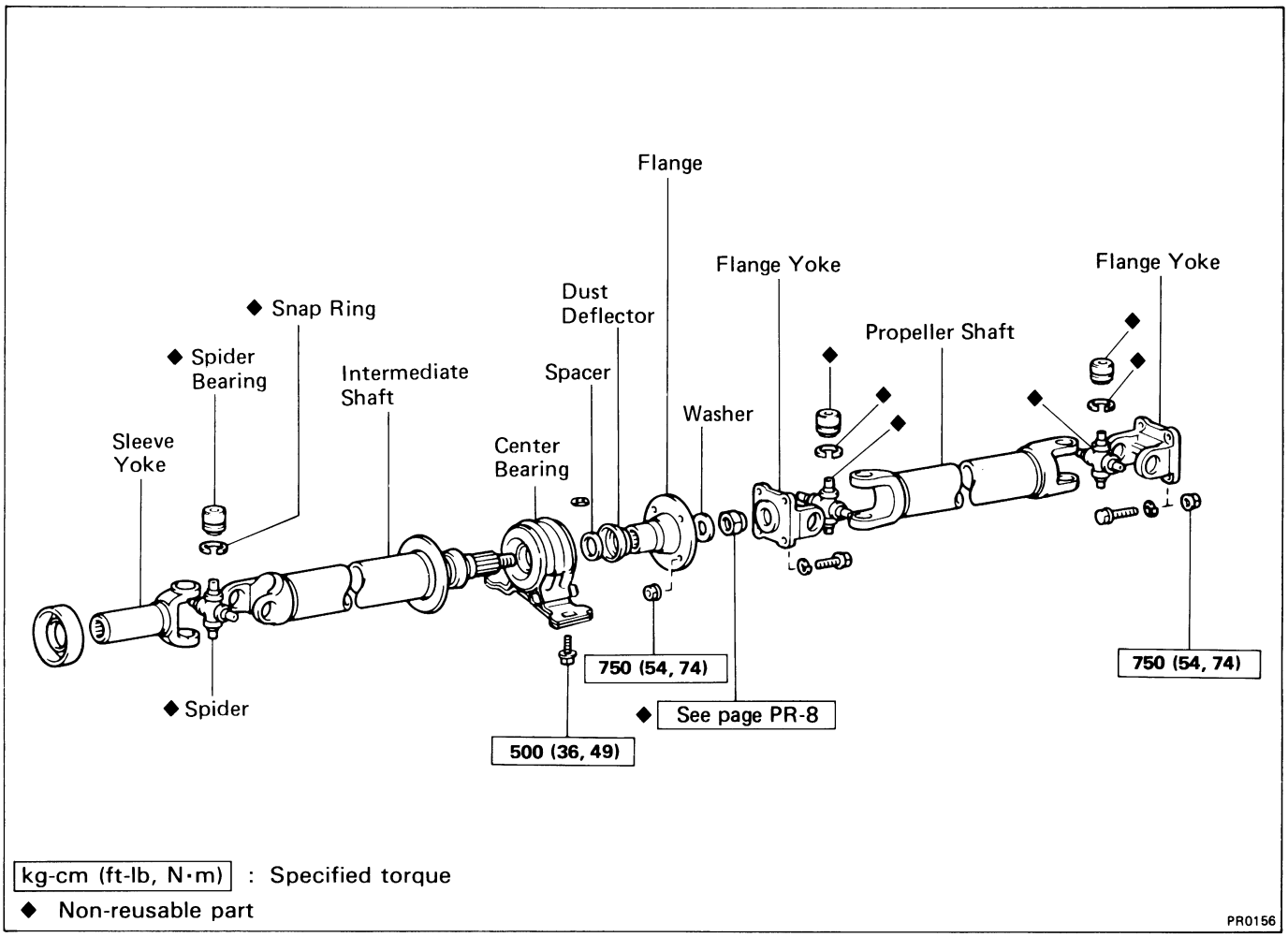

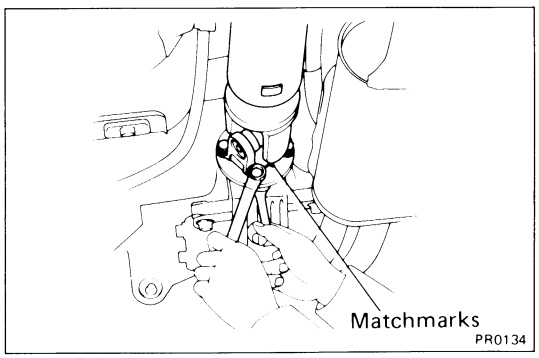

REMOVAL OF PROPELLER SHAFT

1. **DISCONNECT PROPELLER SHAFT FROM DIFFERENTIAL**
   (a) Place the matchmarks on the both flanges.
   (b) Remove the four bolts, washers and nuts.

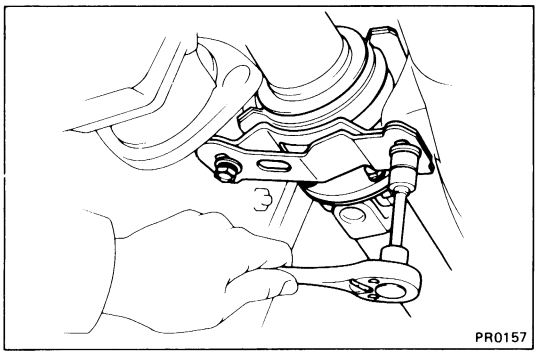

2. **REMOVE CENTER SUPPORT BEARING FROM BODY**

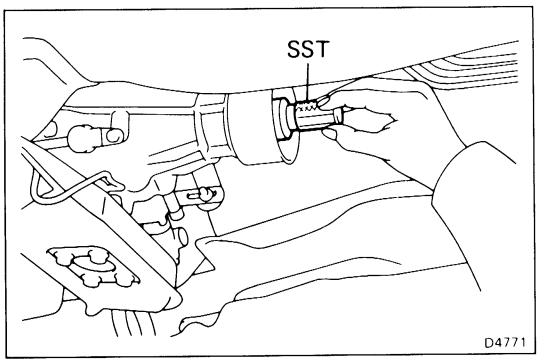

3. REMOVE PROPELLER SHAFT FROM TRANSMISSION

(a) Pull the yoke from the transmission.

(b) Insert SST in the transmission to prevent oil leakage.

SST 09325-40010 (for A/T and R154 M/T)
09325-20010 (for W58 M/T)

INSPECTION OF PROPELLER SHAFT

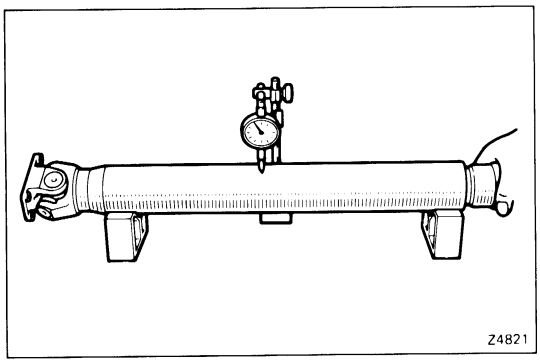

1. INSPECT PROPELLER AND INTERMEDIATE SHAFTS RUNOUT

If shaft runout is greater than maximum, replace the shaft.

Maximum runout: 0.8 mm (0.031 in.)

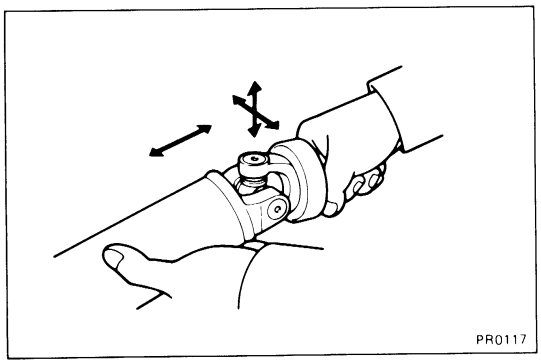

2. INSPECT SPIDER BEARINGS

Check the spider bearing axial play by turning the yoke or flange while holding the shaft tightly.

Bearing axial play: Less than 0.05 mm (0.0020 in.)

DISASSEMBLY OF PROPELLER SHAFT

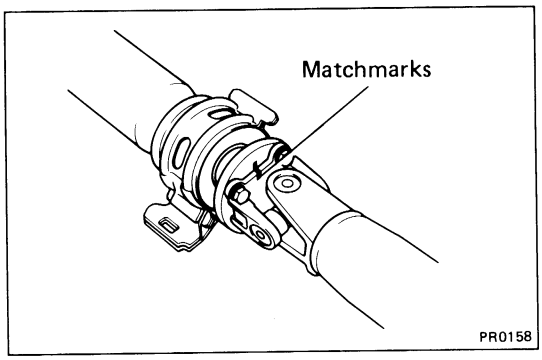

1. SEPARATE PROPELLER SHAFT AND INTERMEDIATE SHAFT

(a) Place the matchmarks on the both flanges.

(b) Remove the four bolts, washers and nuts.

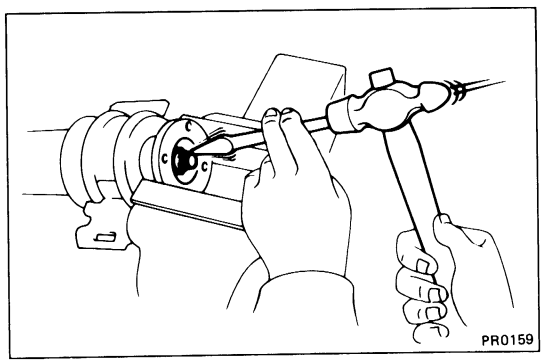

2. REMOVE CENTER SUPPORT BEARING FROM INTERMEDIATE SHAFT

(a) Using a hammer and chisel, loosen the staked part of the nut.

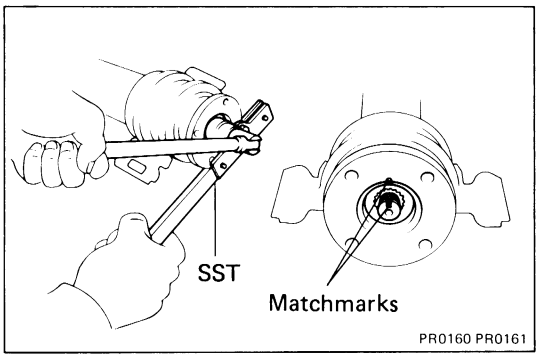

(b) Using SST to hold the flange, remove the nut.

SST 09330-00021

(c) Place the matchmarks on the flange and shaft.

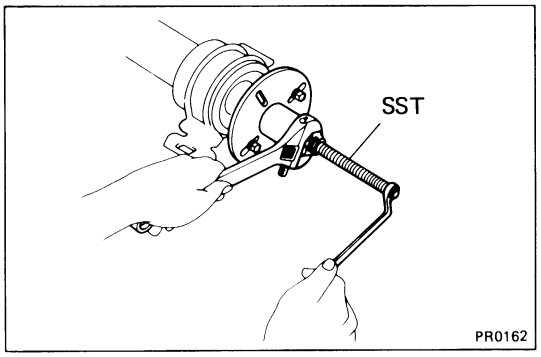

(d) Using SST, remove the flange from the intermediate shaft.

SST 09557-22022

(e) Remove the center support bearing from the intermediate shaft.

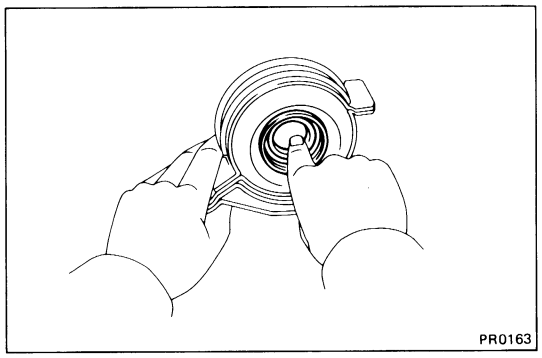

3. INSPECT CENTER SUPPORT BEARING

Check that the bearing turns freely.

If the bearing is damaged, worn, or does not turn freely, replace it.

REPLACEMENT OF SPIDER BEARING

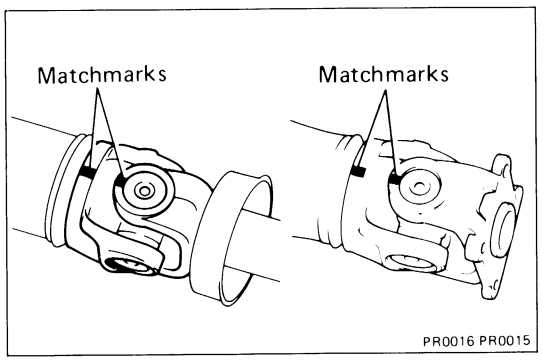

1. PLACE MATCHMARKS ON SHAFT AND FLANGE OR YOKE

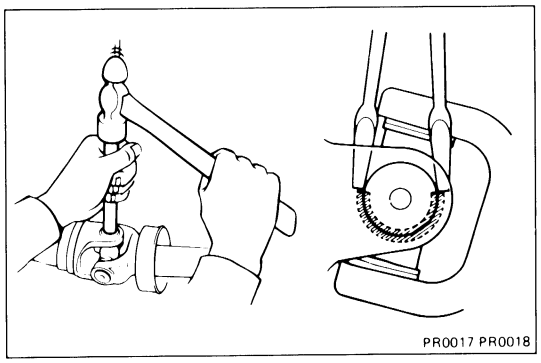

2. REMOVE SNAP RINGS

(a) Slightly tap in the bearing outer races.

(b) Using two screwdrivers, remove the four snap rings from the grooves.

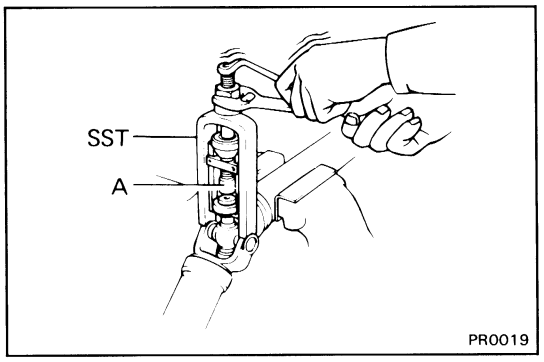

3. REMOVE SPIDER BEARINGS

(a) Using SST, push out the bearing from the propeller shaft.

SST 09332-25010

HINT: Sufficiently raise the part indicated by A so that it does not come into contact with the bearing.

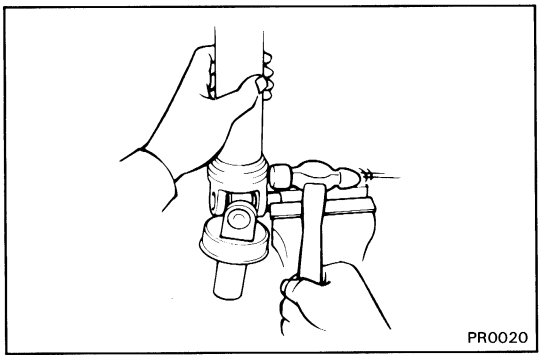

(b) Clamp the bearing outer race in a vise and tap off the propeller shaft with a hammer.

HINT: Remove the bearing on the opposite side in the same procedure.

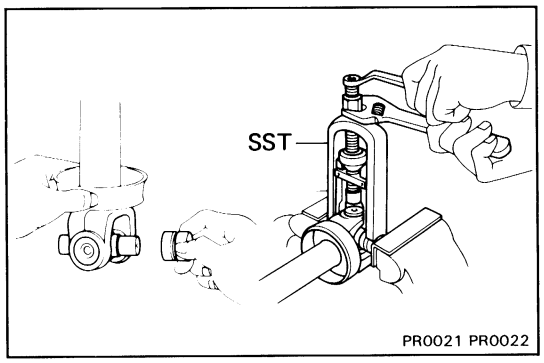

(c) Install the two removed bearing outer races to the spider.

(d) Using SST, push out the bearing from the yoke.

SST 09332-25010

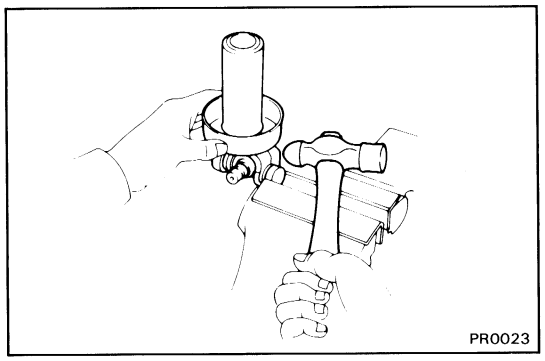

(e) Clamp the bearing outer race in a vise and tap off the yoke with a hammer.

HINT: Remove the bearing on the opposite side in the same procedure.

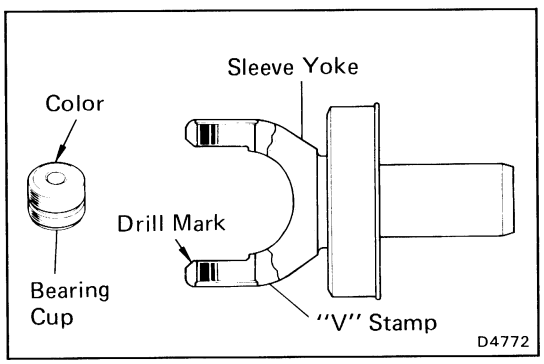

4. SELECT THE SPIDER BEARING

Select the bearing according to whether or not there is a drill mark and "V" stamp on the yoke section.

Sleeve Yoke	Bearing
With marks (drill mark, "V" stamp)	With color mark (Red)
No marks	No color mark

HINT: There are two "V" stamps on the flange yoke (on outer surface of yoke section).

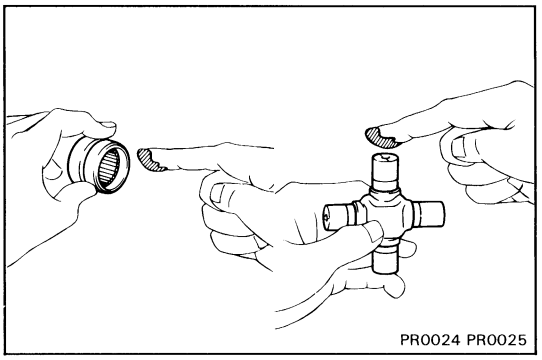

5. INSTALL SPIDER BEARINGS

(a) Apply MP grease to the spider and bearings.

HINT: Be careful not to apply too much grease.

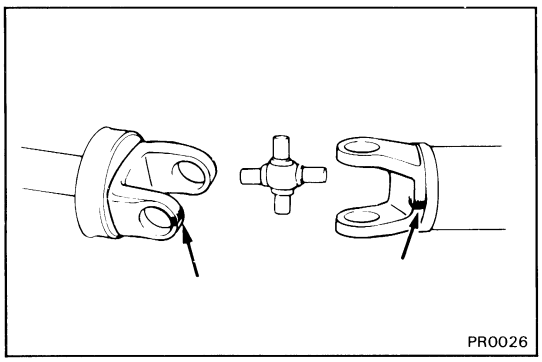

(b) Align the matchmarks on the yoke and shaft.

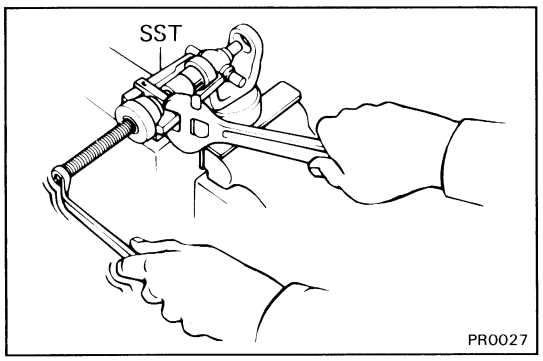

(c) Fit a new spider into the yoke.

(d) Using SST, install new bearings on the spider.

SST 09332-25010

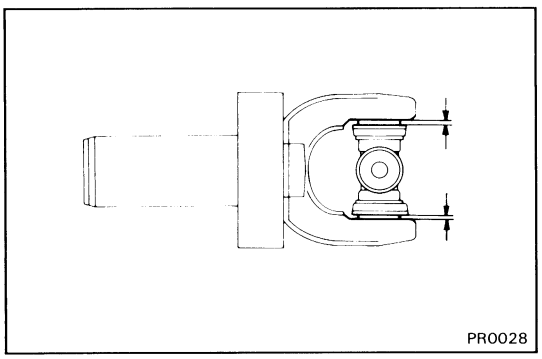

(e) Using SST, adjust both bearings so that the snap ring grooves are at maximum and equal widths.

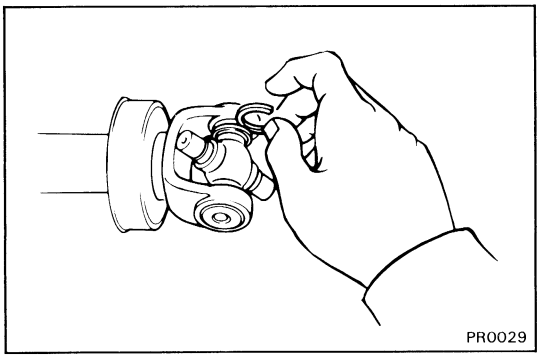

6. INSTALL SNAP RINGS

(a) Install two snap rings of equal thickness which will allow 0 — 0.05 mm (0 — 0.0020 in.) axial play.

HINT: Do not reuse the snap rings.

Mark	Color	Thickness mm (in.)
1	—	2.100 — 2.150 (0.0827 — 0.0846)
2	—	2.150 — 2.200 (0.0846 — 0.0866)
3	—	2.200 — 2.250 (0.0866 — 0.0886)
—	Brown	2.250 — 2.300 (0.0886 — 0.0906)
—	Blue	2.300 — 2.350 (0.0906 — 0.0925)
6	—	2.350 — 2.400 (0.0925 — 0.0945)
7	—	2.400 — 2.450 (0.0945 — 0.0965)
8	—	2.450 — 2.500 (0.0965 — 0.0984)

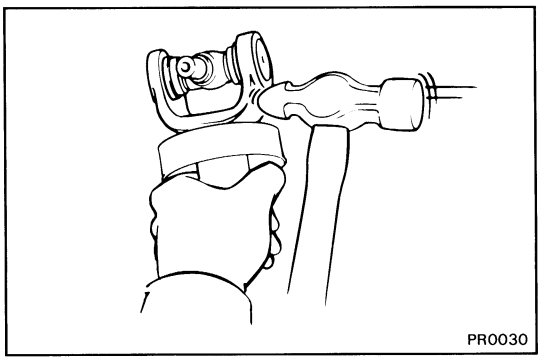

(b) Using a hammer, tap the yoke until there is no clearance between the bearing outer race and snap ring.

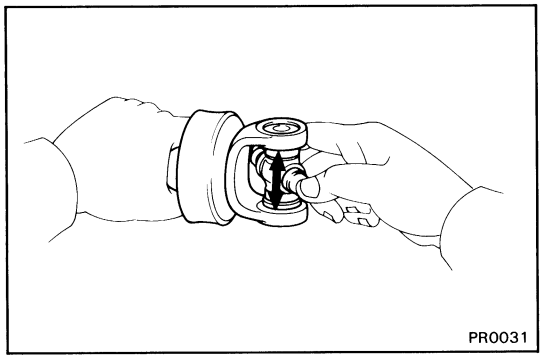

7. CHECK SPIDER BEARING

(a) Check that the spider bearing moves smoothly.

(b) Check the spider bearing axial play.

Bearing axial play: Less than 0.05 mm (0.0020 in.)

HINT: Install new spider bearings on the shaft side in the procedure described above.

ASSEMBLY OF PROPELLER SHAFT

HINT: If replacing either the center flange or intermediate shaft, reassemble them so that the sleeve yoke and propeller shaft yoke are facing in the same direction shown in the figure below.

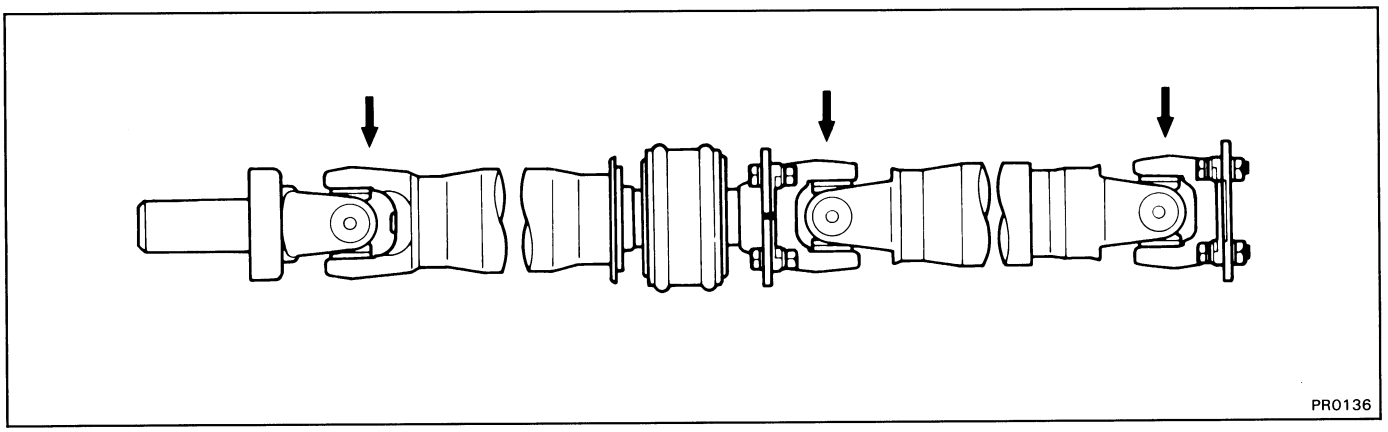

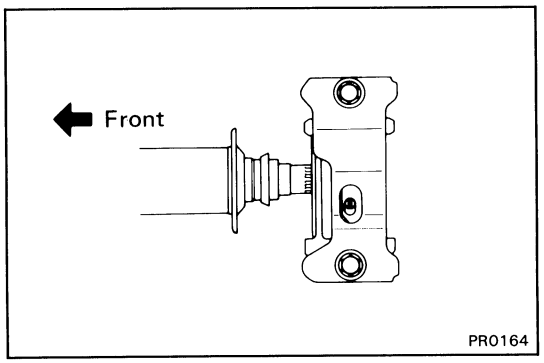

1. INSTALL CENTER SUPPORT BEARING ON INTERMEDIATE SHAFT

HINT: Install the center support bearing with the cutout toward the rear.

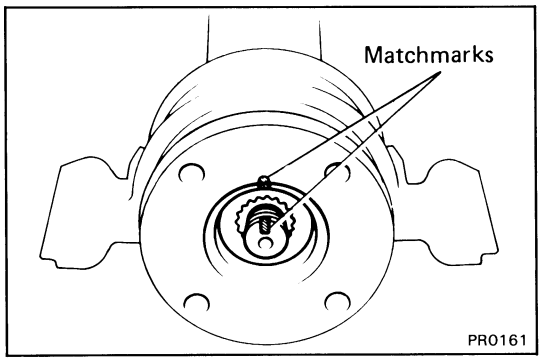

2. INSTALL FLANGE ON INTERMEDIATE SHAFT

(a) Coat the splines of the intermediate shaft with MP grease.

(b) Align the matchmarks on the flange and shaft and place the flange on the shaft.

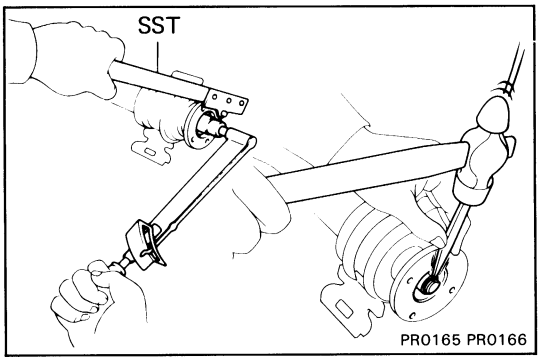

(c) Using SST to hold the flange, press the bearing into position by tightening down a new nut.

SST 09330-00021

Torque: 1,850 kg-cm (134 ft-lb, 181 N·m)

(d) Loosen the nut.

(e) Torque the nut again.

Torque: 700 kg-cm (51 ft-lb, 69 N·m)

(f) Using a hammer and punch, stake the nut.

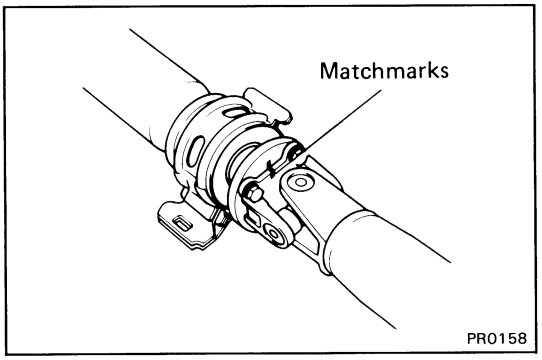

3. INSTALL PROPELLER SHAFT

Align the matchmarks on the flanges and connect the propeller shaft and intermediate shaft with the four bolts, washers and nuts.

Torque: 750 kg-cm (54 ft-lb, 74 N·m)

INSTALLATION OF PROPELLER SHAFT

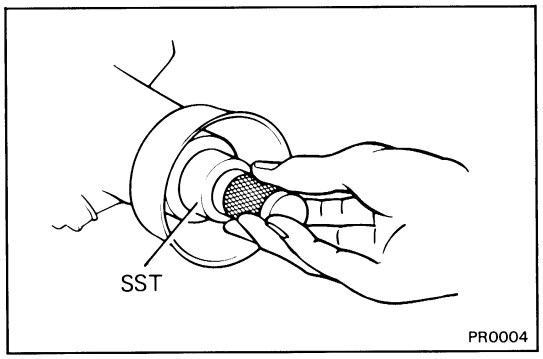

1. INSERT YOKE IN TRANSMISSION

(a) Remove SST.

SST 09325-40010 (for A/T and R154 M/T)
09325-20010 (for W58 M/T)

(b) Insert the yoke into the transmission.

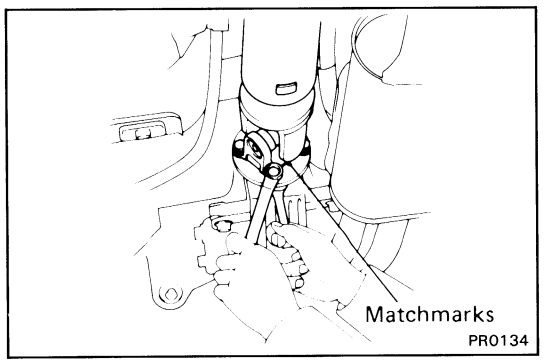

2. CONNECT PROPELLER SHAFT TO DIFFERENTIAL

(a) Align the matchmarks on the flanges and connect the propeller shaft with the four bolts, washers and nuts.

(b) Torque the bolts and nuts.

Torque: 750 kg-cm (54 ft-lb, 74 N·m)

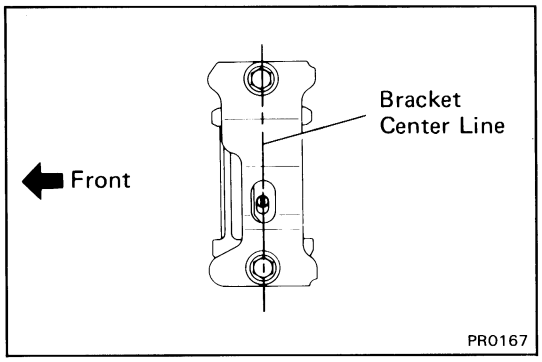

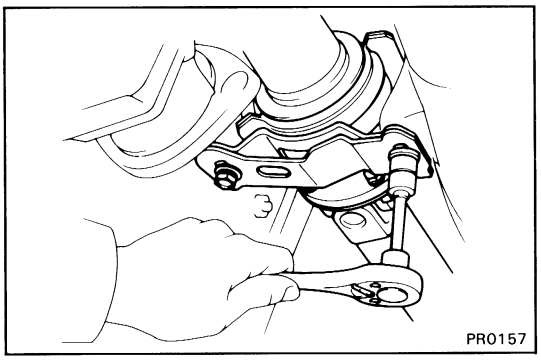

3. INSTALL CENTER SUPPORT BEARING TO BODY

(a) Install the center support bearing to the body with the two mount bolts finger tight.

(b) Check that the bearing bracket is at right angle to the propeller shaft. Adjust the bracket if necessary.

(c) Check that the center line of the center bearing is set to the center line of the bracket when the vehicle is in a no-load condition. Adjust the center bearing if necessary.

(d) Torque the bolts.

Torque: 500 kg-cm (36 ft-lb, 49 N·m)

FRONT AXLE AND SUSPENSION

	Page
TROUBLESHOOTING	FA-2
FRONT WHEEL ALIGNMENT	FA-3
FRONT AXLE HUB	FA-8
FRONT SHOCK ABSORBER	FA-17
FRONT SUSPENSION	FA-21
Ball Joints	FA-21
Upper Suspension Arm	FA-23
Lower Suspension Arm	FA-24
Stabilizer Bar and Link	FA-27
TOYOTA ELECTRONIC MODULATED SUSPENSION (TEMS)	FA-29

TROUBLESHOOTING

Problem	Possible cause	Remedy	Page
Wanders/pulls	Tires worn or improperly inflated	Replace tire or inflate tires to proper pressure	FA-3
	Alignment incorrect	Check front wheel alignment	FA-3
	Hub bearing worn	Replace hub bearing	FA-8
	Front or rear suspension parts loose or broken	Tighten or replace suspension parts	
	Steering linkage loosen or worn	Tighten or replace steering linkage	
	Steering gear out of adjustment or broken	Adjust or repair steering gear	SR-44
Bottoming	Vehicle overloaded	Check loading	
	Shock absorber worn out	Replace shock absorber	FA-17
	Springs weak	Replace spring	FA-17
Sways/pitches	Tires improperly inflated	Inflate tires to proper pressure	FA-3
	Stabilizer bar bent or broken	Inspect stabilizer bar	FA-27
	Shock absorber worn out	Replace shock absorber	FA-17
Front wheel shimmy	Tires worn or improperly inflated	Replace tire or inflate tires to proper pressure	FA-3
	Wheels out of balance	Balance wheels	
	Shock absorber worn out	Replace shock absorber	FA-17
	Alignment incorrect	Check front wheel alignment	FA-3
	Hub bearings worn	Replace hub bearings	FA-8
	Ball joints worn	Inspect ball joints	FA-21
	Steering linkage loosen or worn	Tighten or replace steering linkage	
	Steering gear out of adjustment or broken	Adjust or repair steering gear	SR-45
Abnormal tire wear	Tires improperly inflated	Inflate tires to proper pressure	FA-3
	Shock absorbers worn out	Replace shock absorber	FA-17
	Alignment incorrect	Check front wheel alignment	FA-3
	Suspension parts worn	Replace suspension parts	

FRONT WHEEL ALIGNMENT

1. MAKE FOLLOWING CHECKS AND CORRECT ANY PROBLEMS

(a) Check the tires for wear and proper inflation pressure.

Cold tire inflation pressure:

kg/cm^2 (psi, kPa)

Tire size	Front	Rear
225/50 R 16	2.2 (32, 220)	2.2 (32, 220)

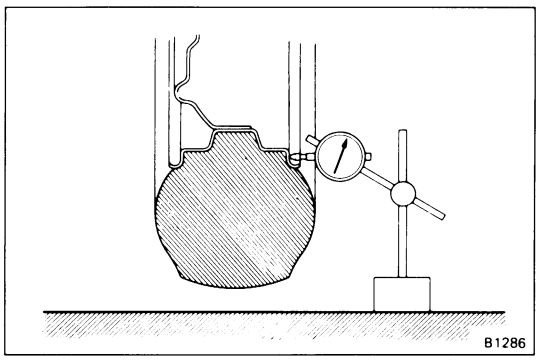

(b) Check the wheel runout.

Lateral runout: Less than 1.2 mm (0.047 in)

(c) Check the front wheel bearings for looseness.

(d) Check the front suspension for looseness.

(e) Check the steering linkage for looseness.

(f) Check the ball joint for excessive looseness.

(g) Check that the front shock absorber work properly by using the standard bounce test.

2. MEASURE CHASSIS GROUND CLEARANCE

Chassis ground clearance:

mm (in.)

Tire size	Front	Rear
225/50 R 16	201.5 (7.933)	219.0 (8.622)

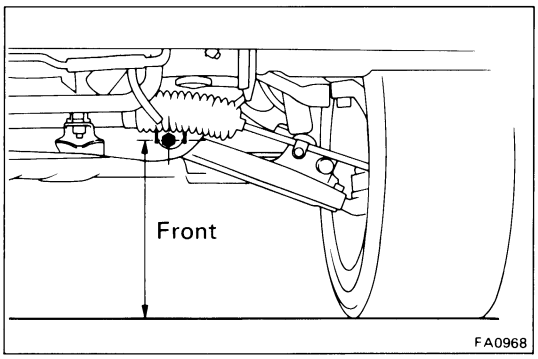

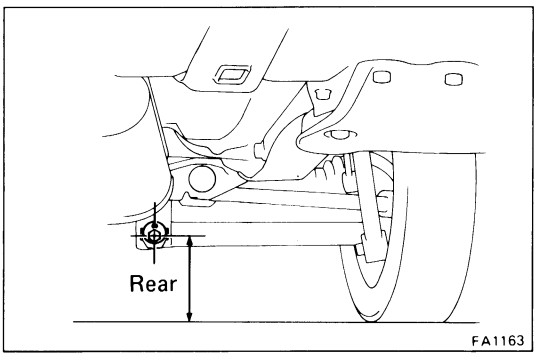

If the clearance of the vehicle is not standard, try to level by locking it down.

If still not correct check for bad springs or suspension parts.

HINT:

- Measuring point

  Front Measure from the ground to the center of the lower suspension arm front mounting bolt.

  Rear Measure from the ground to the center of the No.2 lower suspension arm mounting bolt.

- Before inspecting wheel alignment, adjust chassis ground clearance to specification.

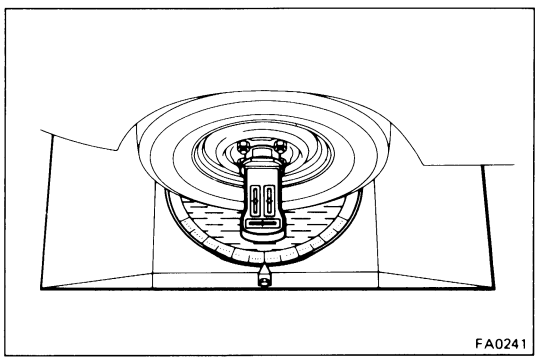

3. INSTALL WHEEL ALIGNMENT EQUIPMENT

Follow the specific instructions of the equipment manufacturer.

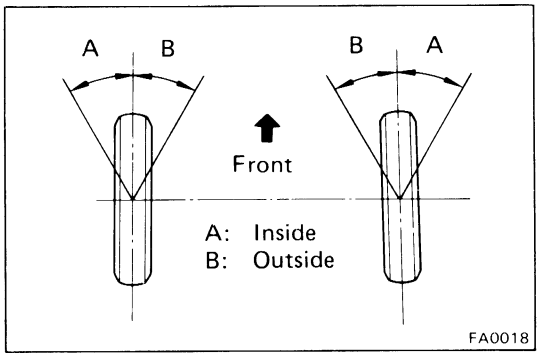

4. ADJUST WHEEL ANGLE

Wheel Angle

Max.		at 20° (Outside wheel)
Inside wheel	Outside wheel	Inside wheel
$34°30' {}^{+1°30'}_{-2°00'}$	31°45'	21°00'

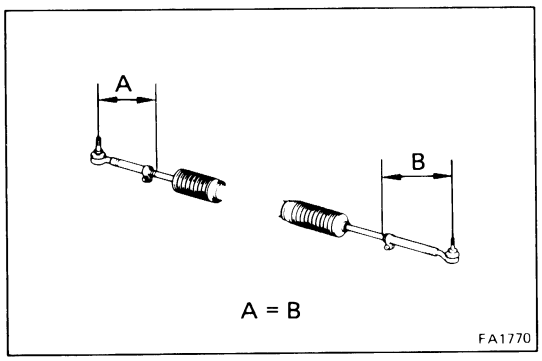

If wheel angle differ from the standard specifications, check to see if the lengths of the left and right tie rods are the same.

HINT: If the tie rods lengths are not equal, the wheel angle can not be adjusted properly.
Reinspect the toe-in after adjusting the tie rods lengths.

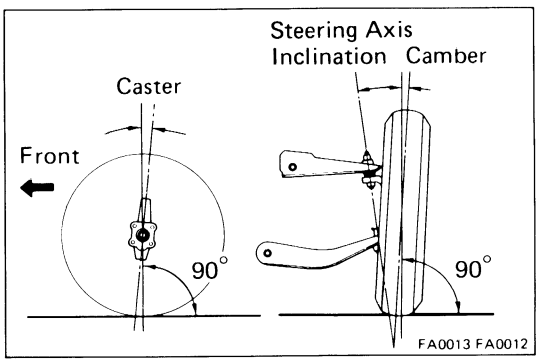

5. ADJUST CAMBER, CASTER AND STEERING AXIS INCLINATION

Camber:

Inspection standard	**−0°10' ± 45'**
Adjustment standard	**−0°10' ± 30'**
Left-right error	**30'**

Caster:

Inspection standard	**7°40' ± 45'**
Adjustment standard	**7°40' ± 30'**
Left-right error	**30'**

Steering axis inclination:

Inspection standard	**10°55' ± 45'**
Left-right error	**30'**

If the steering axis inclination is not as specified, after camber and caster have correctly adjusted, recheck the steering knuckle front wheel for bearing or looseness.

If camber and caster are not within specification, adjust by front and rear adjusting cams.
(See adjustment chart)

Torque: 2,450 kg-cm (177 ft-lb, 240 N·m)

HINT: Remove the stands and bounce the vehicle up and down to stabilize the suspension.

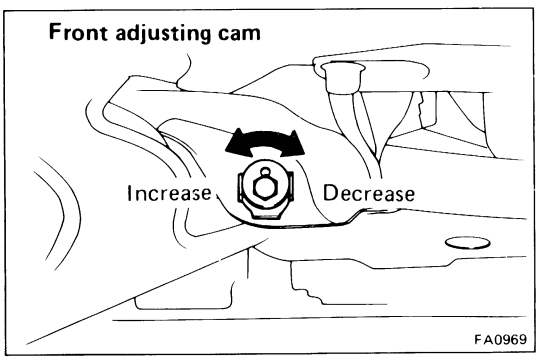

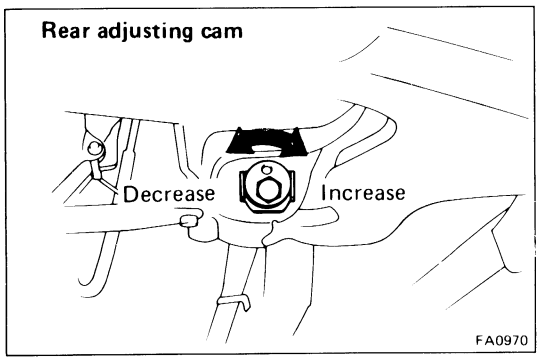

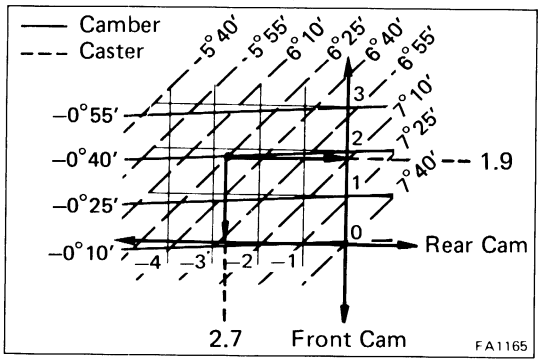

How to Read Chart

(a) Mark on the graph the measurements taken from the vehicle.

Example: Camber —0° 40′
Caster 6° 25′

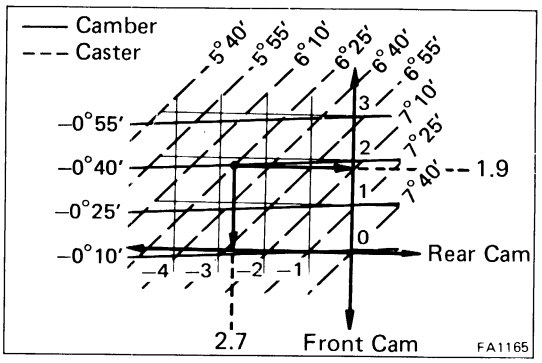

(b) As shown the illustration, read from the graph the amounts by which the front and/or rear cams are to be adjusted.

Example: Front cam Increase 1.9
Rear cam Decrease 2.7

(c) Loosen and adjust the front and/or rear cams.

(d) Torque the front and/or rear cam nuts.

Torque: 2,450 kg-cm (177 ft-lb, 240 N·m)

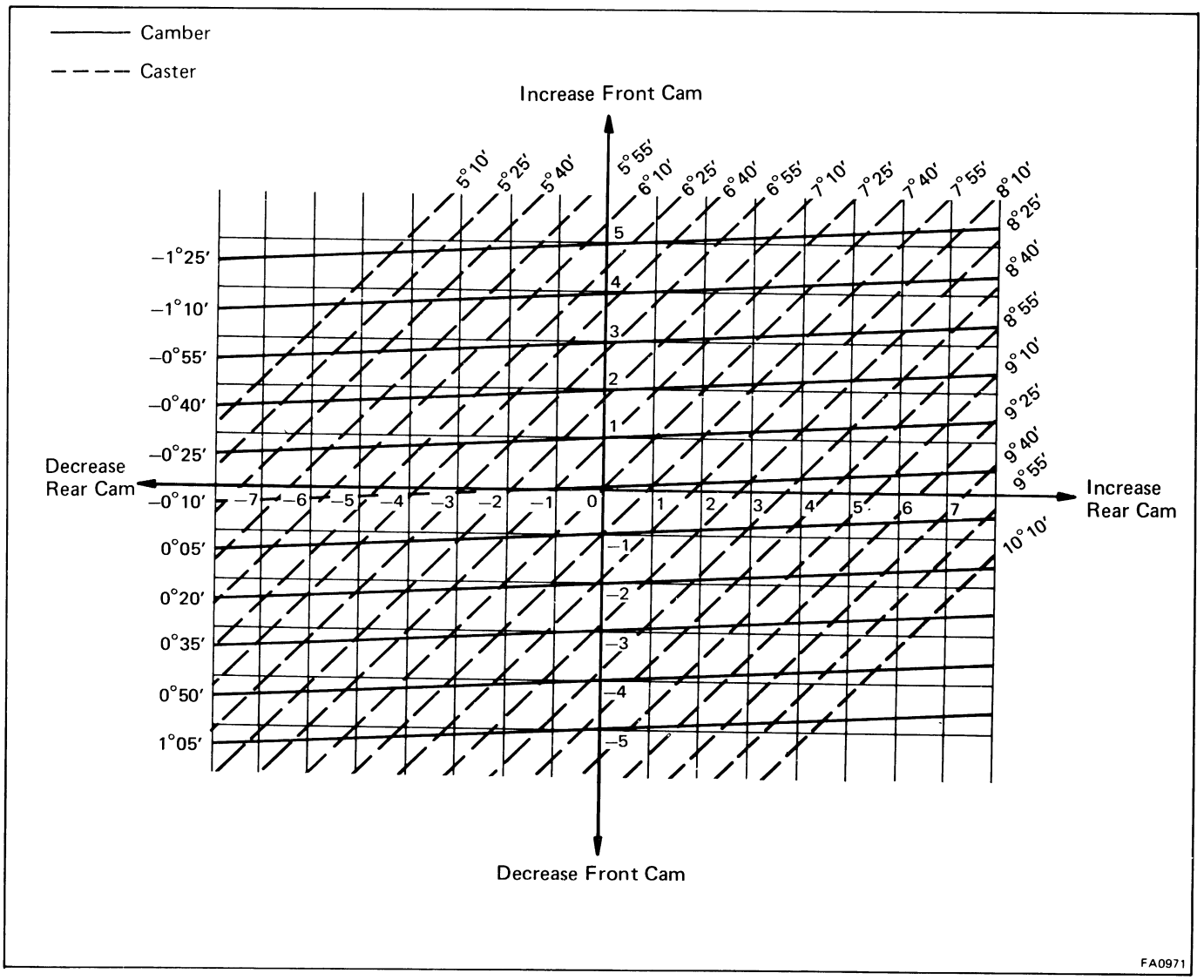

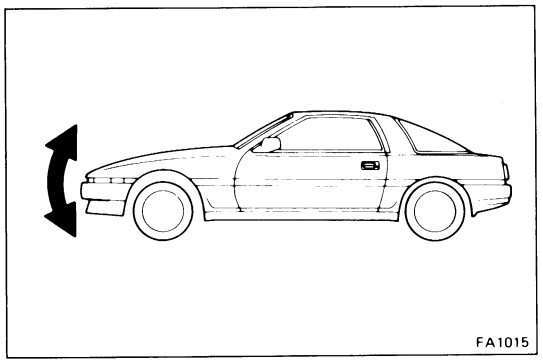

6. INSPECT TOE-IN

Measure toe-in with a toe-in gauge in the following procedure.

(a) Bounce the vehicle up and down to stabilize the suspension.

(b) Move the vehicle forward about 5 m (16.4 ft) with the front wheel in the straight-ahead position on a level place.

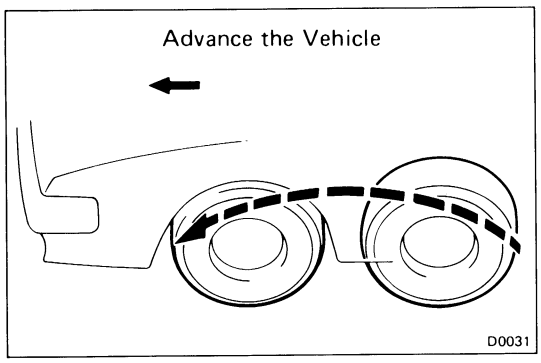

(c) Make the center of each rear tread and measure the distance between the right and left tires.

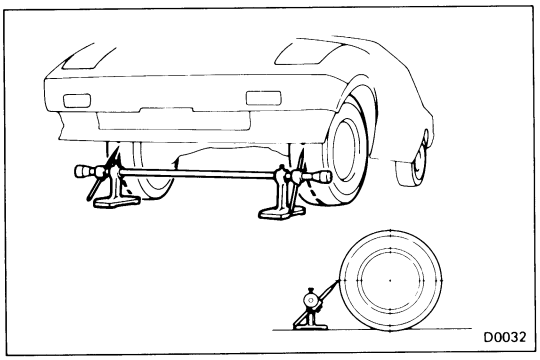

(d) Advance the vehicle until the marks on the rear sides of the tires come to measuring heights of the gauge on the front side.

HINT: If the tire rolls too far, repeat from step (b).

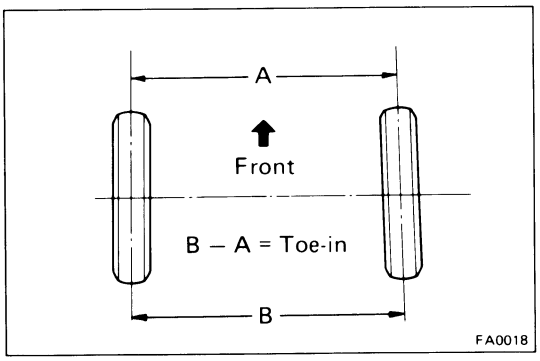

(e) Measure the distance between the marks on the front of the tires.

Inspection standard: 0 ± 2 mm (0 ± 0.08 in.)

If necessary adjust the toe-in.

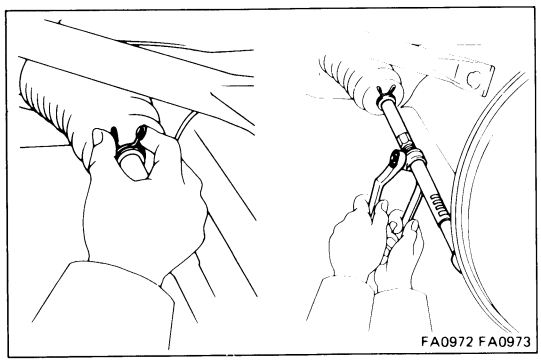

7. ADJUST TOE-IN

(a) Remove the boot clips.

(b) Loosen the tie rod end lock nuts.

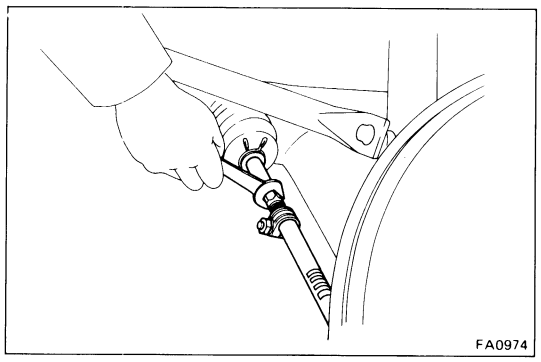

(c) Turn the left and right tie rod ends an equal amount to adjust the toe-in.

Adjustment standard: 0 ± 1 mm (0 ± 0.04 in.)

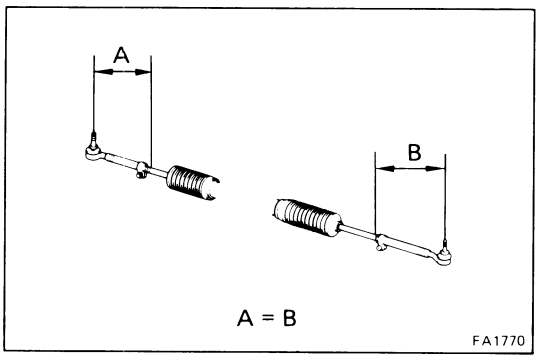

HINT: Insure that the lengths of the left and right tie rods are the same.

Tie rod end length left-right error:
Less than 1.5 mm (0.059 in.)

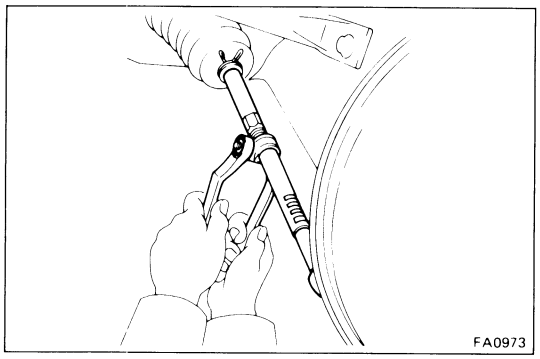

(d) Torque the tie rod end clamp nuts.

Torque: 195 kg-cm (14 ft-lb, 19 N·m)

(e) Place the boot on the seat and clamp it.

HINT: Insure that the boots are not twisted.

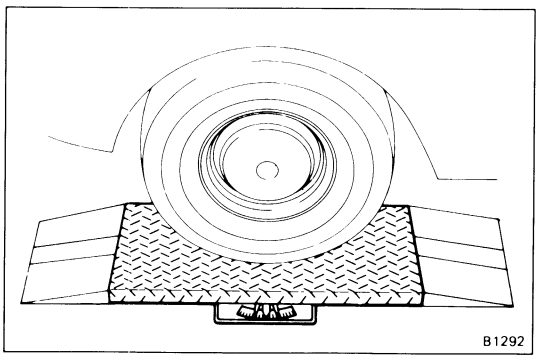

8. INSPECT SIDE SLIP (REFERENCE ONLY)

Side slip limit:
Less than 3.0 mm/m (0.118 in./3.3 ft)

FRONT AXLE HUB

COMPONENTS

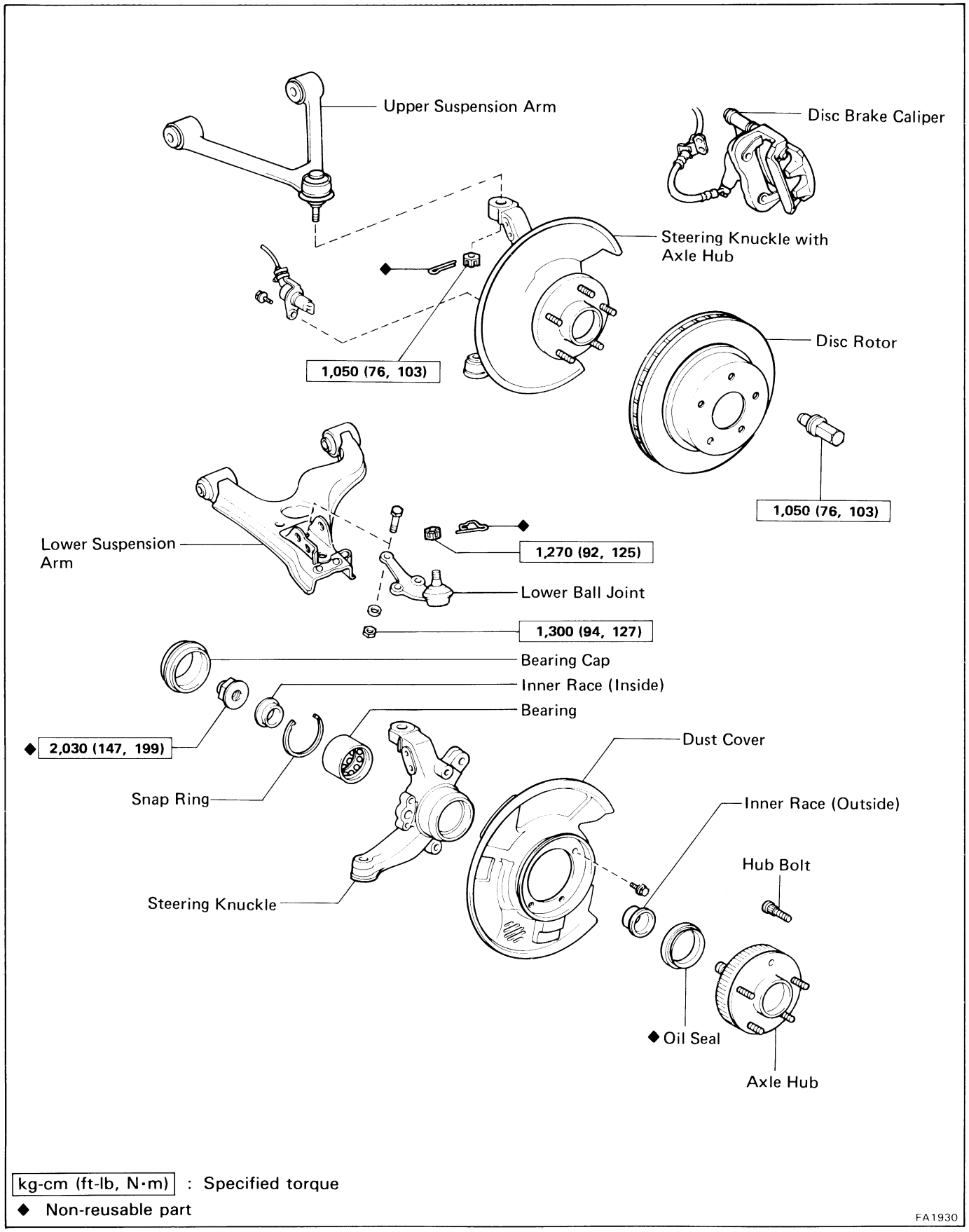

kg-cm (ft-lb, N·m) : Specified torque

◆ Non-reusable part

FA1930

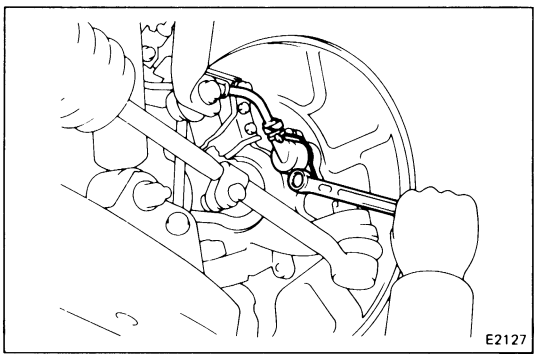

REMOVAL OF FRONT AXLE HUB

1. REMOVE DISC BRAKE CALIPER

NOTICE: When removing the axle hub (w/ Anti-lock Brake System), be careful not to apply excessive force to the hub, and do not let the hub fall.

(a) Remove the speed sensor from the steering knuckle.

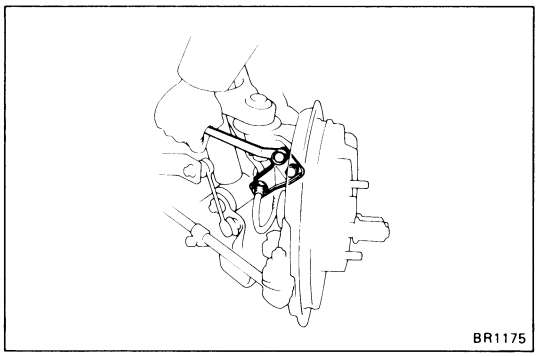

(b) Remove the brake hose bracket from the steering knuckle.

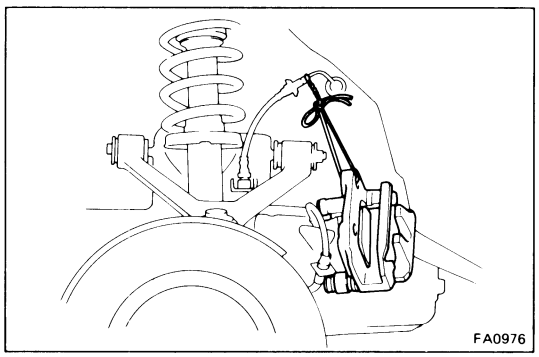

(c) Remove the brake caliper from the steering knuckle and suspened it with wire.

2. REMOVE ROTOR DISC

Place matchmarks on the rotor disc and axle hub.

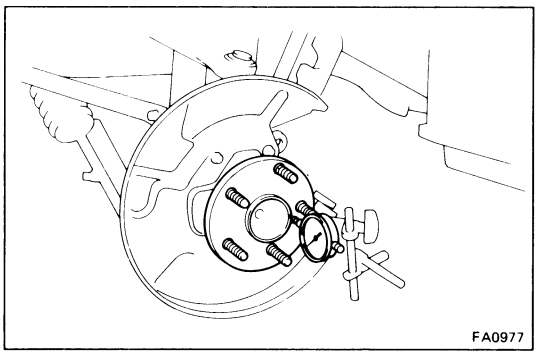

3. CHECK BEARING PLAY IN AXIAL DIRECTION

Limit: 0.05 mm (0.0020 in.)

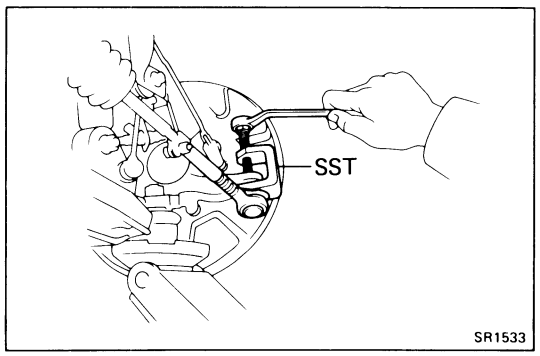

4. DISCONNECT TIE ROD END FROM STEERING KNUCKLE

(a) Remove the cotter pin and nut from the steering knuckle.

(b) Using SST, disconnect the tie rod end from the steering knuckle.

SST 09628-10011

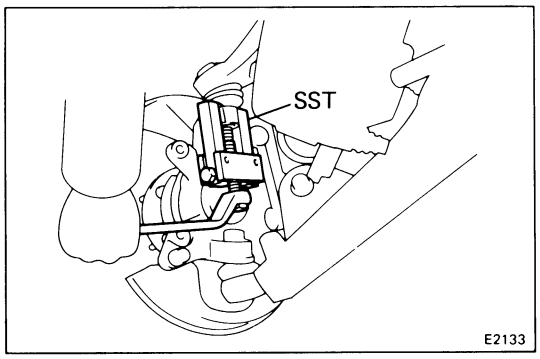

5. DISCONNECT STEERING KNUCKLE FROM UPPER SUSPENSION ARM

(a) Remove the cotter pin and nut.

(b) Using SST, disconnect the steering knuckle from the upper suspension arm.

SST 09628-62011

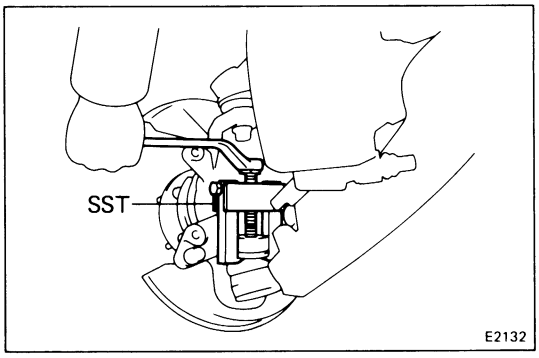

6. REMOVE STEERING KNUCKLE

(a) Remove the clip and nut.

(b) Using SST, remove the steering knuckle from the lower ball joint.

SST 09628-62011

DISASSEMBLY OF FRONT AXLE HUB

(See page FA-8)

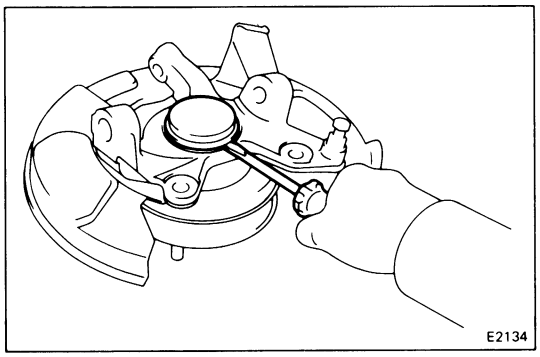

1. REMOVE HUB BEARING CAP

Using a screwdriver, remove the hub bearing cap from the steering knuckle.

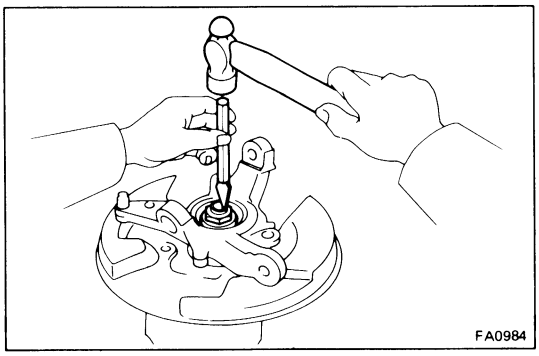

2. REMOVE FRONT AXLE HUB LOCK NUT

(a) Clamp the axle hub in a soft jaw vice.

HINT: Close vice until it holds hub bolt do not tighten further.

(b) Using a hammer and chisel, loosen the staked part of the lock nut and remove it.

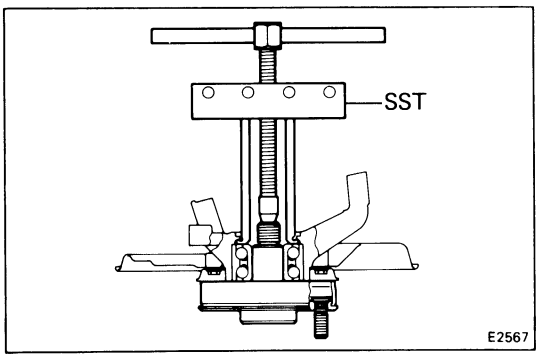

3. REMOVE AXLE HUB

Using SST, remove the axle hub from the axle bearing.

SST 09213-36020

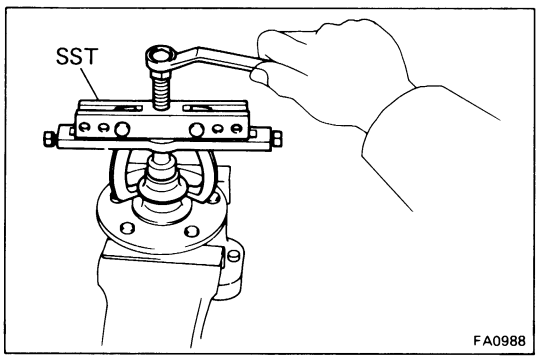

4. REMOVE HUB BEARING INNER RACE

Using SST, remove the hub bearing inner race (outside) from the axle hub.

SST 09950-20017

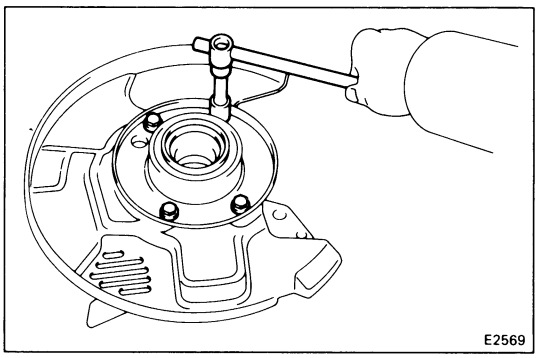

5. REMOVE DUST COVER

Remove the bolts and dust cover from the steering knuckle.

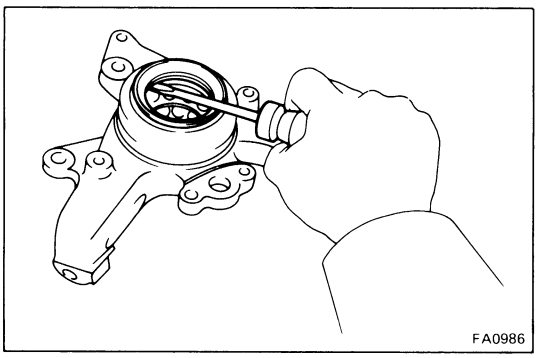

6. REMOVE OUTER OIL SEAL

Using a screwdriver, remove the outer oil seal from the steering knuckle.

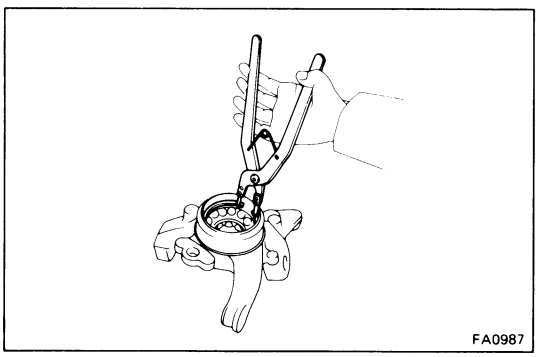

7. REMOVE HUB BEARING

(a) Using a snap ring pliers, remove the hole snap ring.

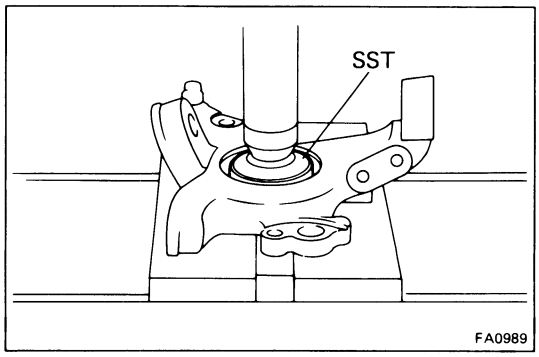

(b) Temporarily install the hub bearing inner race (outside) to the hub bearing.

(c) Using SST, remove the hub bearing from the steering knuckle.

SST 09608-35014 (09608-06100)

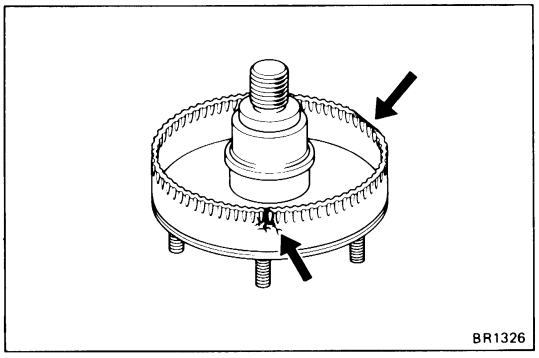

INSPECTION OF FRONT AXLE HUB SENSOR ROTOR (w/ Anti-lock Brake System)

INSPECT SENSOR ROTOR

Inspect the sensor rotor serrations for scratches, cracks, warps or missing teeth.

NOTICE: To prevent damage to the serrations, do not drop or strike the axle hub.

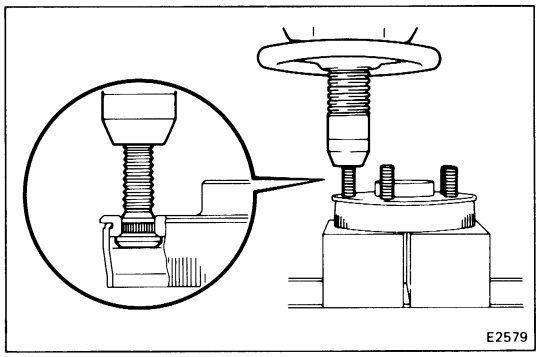

REPLACEMENT OF FRONT AXLE HUB BOLT (w/ Anti-lock Brake System)

NOTICE: To keep from deforming the hub body, apply the load so that it is evenly distributed.

1. **REMOVE HUB BOLT**

   Using a press, press out the hub bolt.

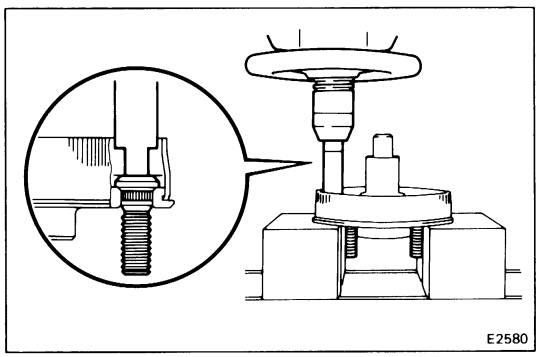

2. **INSTALL NEW HUB BOLT**

   Using a press and a brass bar, install a new hub bolt.

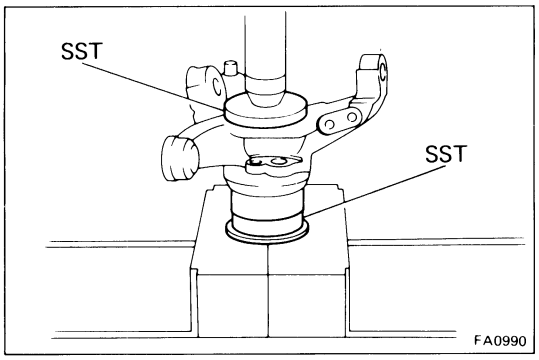

ASSEMBLY OF FRONT AXLE HUB

(See page FA-8)

1. INSTALL HUB BEARING

(a) Using SST, install the hub bearing.

SST 09608-32010 and 09608-35014 (09608-06120)

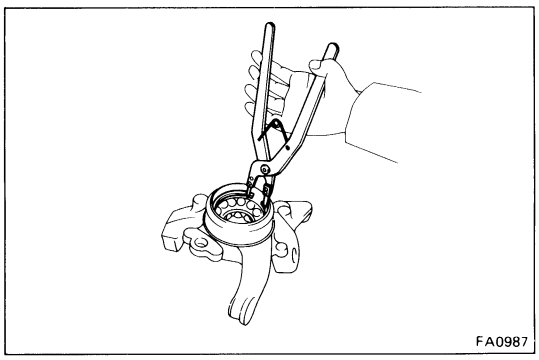

(b) Using snap ring pliers, install the hole snap ring.

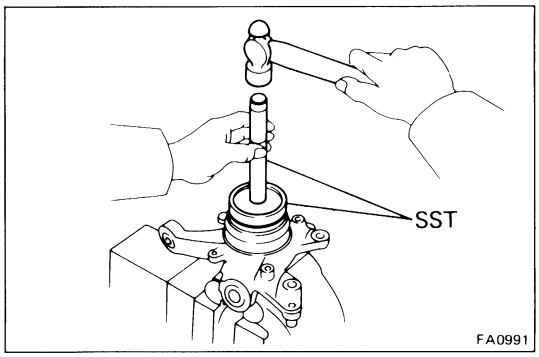

2. INSTALL OUTER OIL SEAL

(a) Install the hub bearing inner race (outside) to the hub bearing.

(b) Install a new oil seal onto the SST, and install the oil seal into the steering knuckle.

SST 09608-32010 and 09608-35014 (09608-06020)

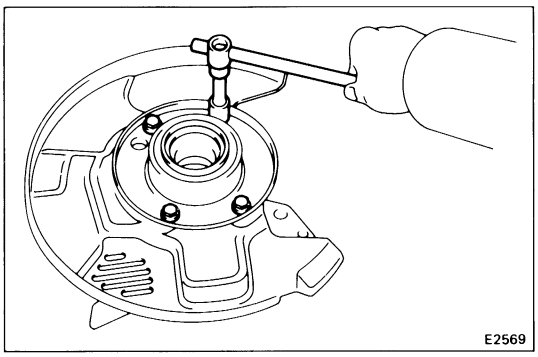

3. INSTALL DISC BRAKE DUST COVER

Install the dust cover to the steering knuckle and torque them.

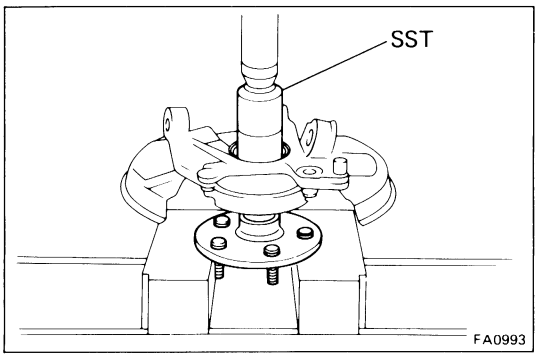

4. INSTALL AXLE HUB

(a) Install the hub bearing inner race (inside) to the hub bearing.

(b) Using SST, install the axle hub to the steering knuckle.

SST 09636-20010

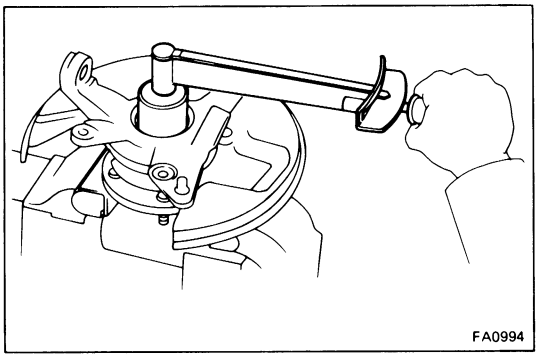

(c) Install and torque a new axle hub lock nut.

Torque: 2,030 kg-cm (147 ft-lb, 199 N·m)

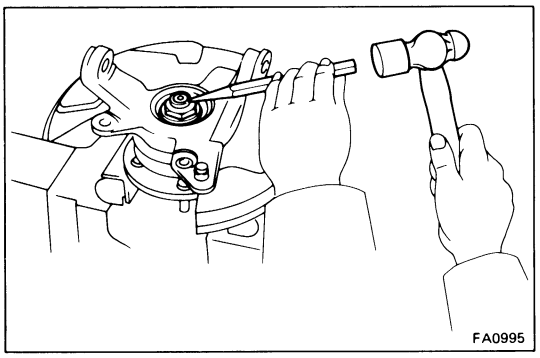

(d) Using a punch and hammer, stake the lock nut.

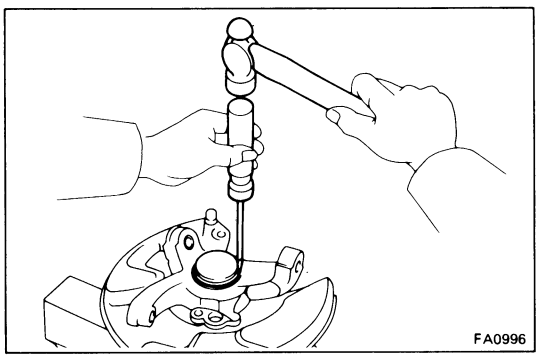

5. INSTALL HUB BEARING CAP

Using a screwdriver and hammer, install the hub bearing cap to the steering knuckle.

INSTALLATION OF FRONT AXLE HUB

(See page FA-8)

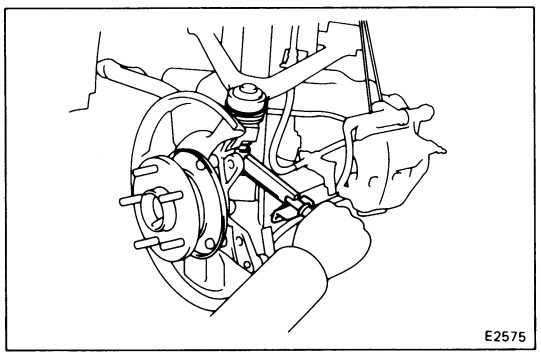

1. INSTALL STEERING KNUCKLE TO UPPER BALL JOINT

(a) Install the steering knuckle to the upper ball joint and torque the nut.

Torque: 1,050 kg-cm (76 ft-lb, 103 N·m)

(b) Install a new cotter pin.

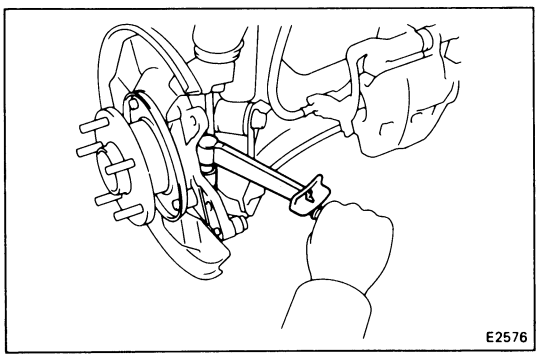

2. CONNECT STEERING KNUCKLE TO LOWER BALL JOINT

(a) Connect the steering knuckle to the lower ball joint and torque the nut.

Torque: 1,270 kg-cm (92 ft-lb, 125 N·m)

(b) Install a new clip.

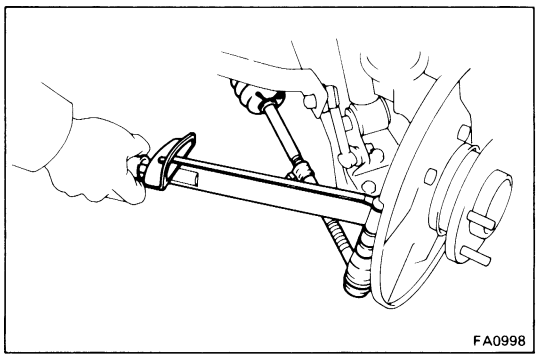

3. **CONNECT TIE ROD END TO STEERING KNUCKLE**
   (a) Connect the tie rod end to the steering knuckle.
   (b) Torque the nut and secure it with a new cotter pin.
   Torque: 500 kg-cm (36 ft-lb, 49 N·m)

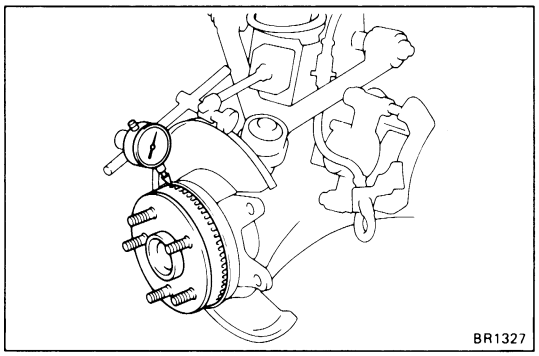

4. **INSPECT FRONT AXLE HUB SENSOR ROTOR RUNOUT**
   (See page BR-70)

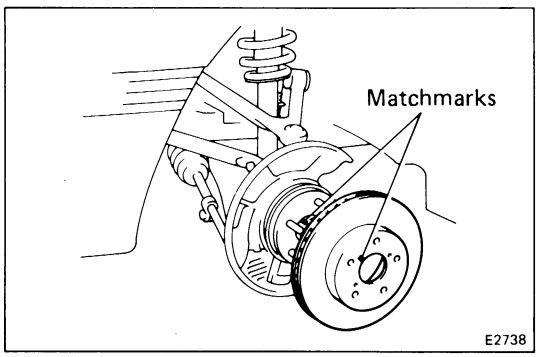

5. **INSTALL ROTOR DISC TO FRONT AXLE HUB**
   Align the matchmarks on the rotor disc and axle hub.

6. **MEASURE ROTOR DISC RUNOUT**
   (See page BR-28)

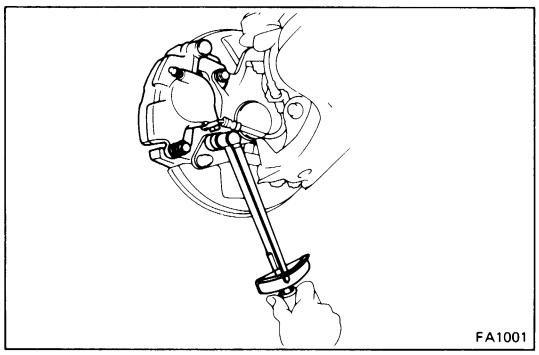

7. **INSTALL DISC BRAKE CALIPER TO STEERING KNUCKLE**
   Torque: 1,065 kg-cm (77 ft-lb, 104 N·m)

8. **INSTALL BRAKE HOSE BRACKET TO STEERING KNUCKLE**
   Torque: 195 kg-cm (14 ft-lb, 19 N·m)

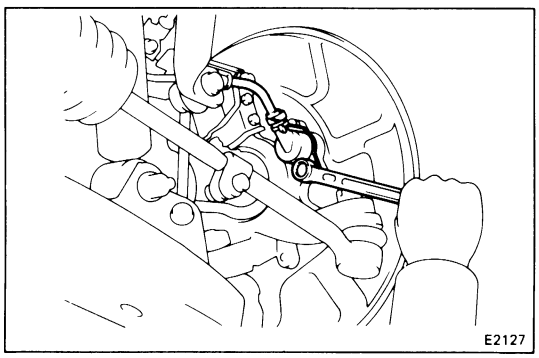

9. **INSTALL SPEED SENSOR (w/ Anti-lock Brake System)**
   Torque: 195 kg-cm (14 ft-lb, 19 N·m)

10. **CHECK FRONT WHEEL ALIGNMENT**
    (See page FA-3)

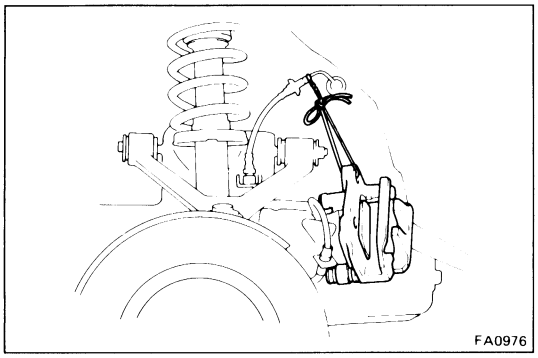

REPLACEMENT OF FRONT AXLE HUB BOLT

1. REMOVE DISC BRAKE CALIPER

(a) Remove the brake hose bracket from the steering knuckle.

(b) Remove the disc brake caliper from the steering and suspened it with wire.

2. REMOVE ROTOR DISC

Place matchmarks on the rotor disc and hub.

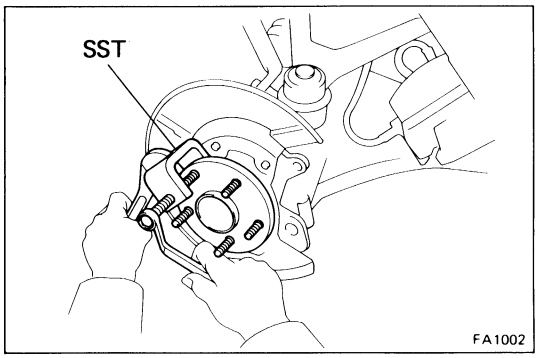

3. REMOVE FRONT AXLE HUB BOLT

(a) Align the disc brake dust cover cutting portion and axle hub bolt.

(b) Using SST, remove the axle hub bolt.

SST 09650-17011

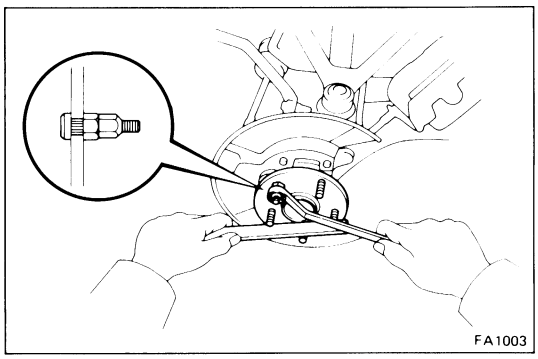

4. INSTALL FRONT AXLE HUB BOLT

Hold the front axle hub, and install a new hub bolt.

5. INSTALL ROTOR DISC

Align the matchmarks on the rotor disc.

6. MEASURE ROTOR DISC RUNOUT
(See page BR-28)

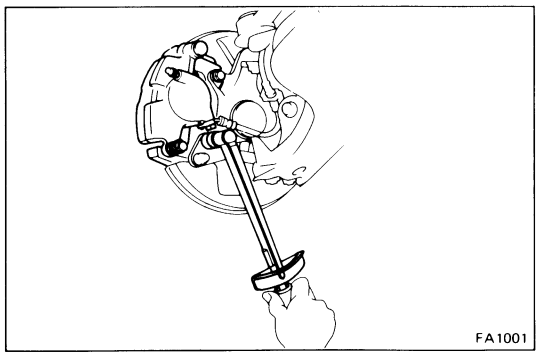

7. INSTALL DISC BRAKE CALIPER TO STEERING KNUCKLE

Torque: 1,065 kg-cm (77 ft-lb, 104 N·m)

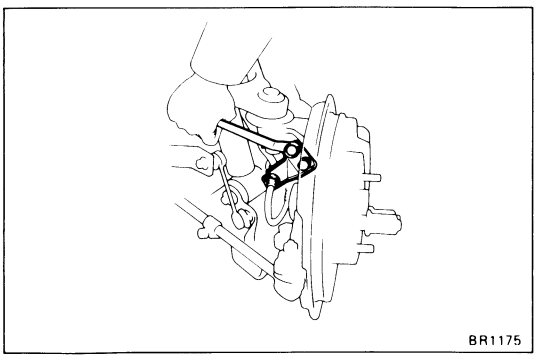

8. INSTALL BRAKE HOSE BRACKET TO STEERING KNUCKLE

Torque: 195 kg-cm (14 ft-lb, 19 N·m)

FRONT SHOCK ABSORBER

COMPONENTS

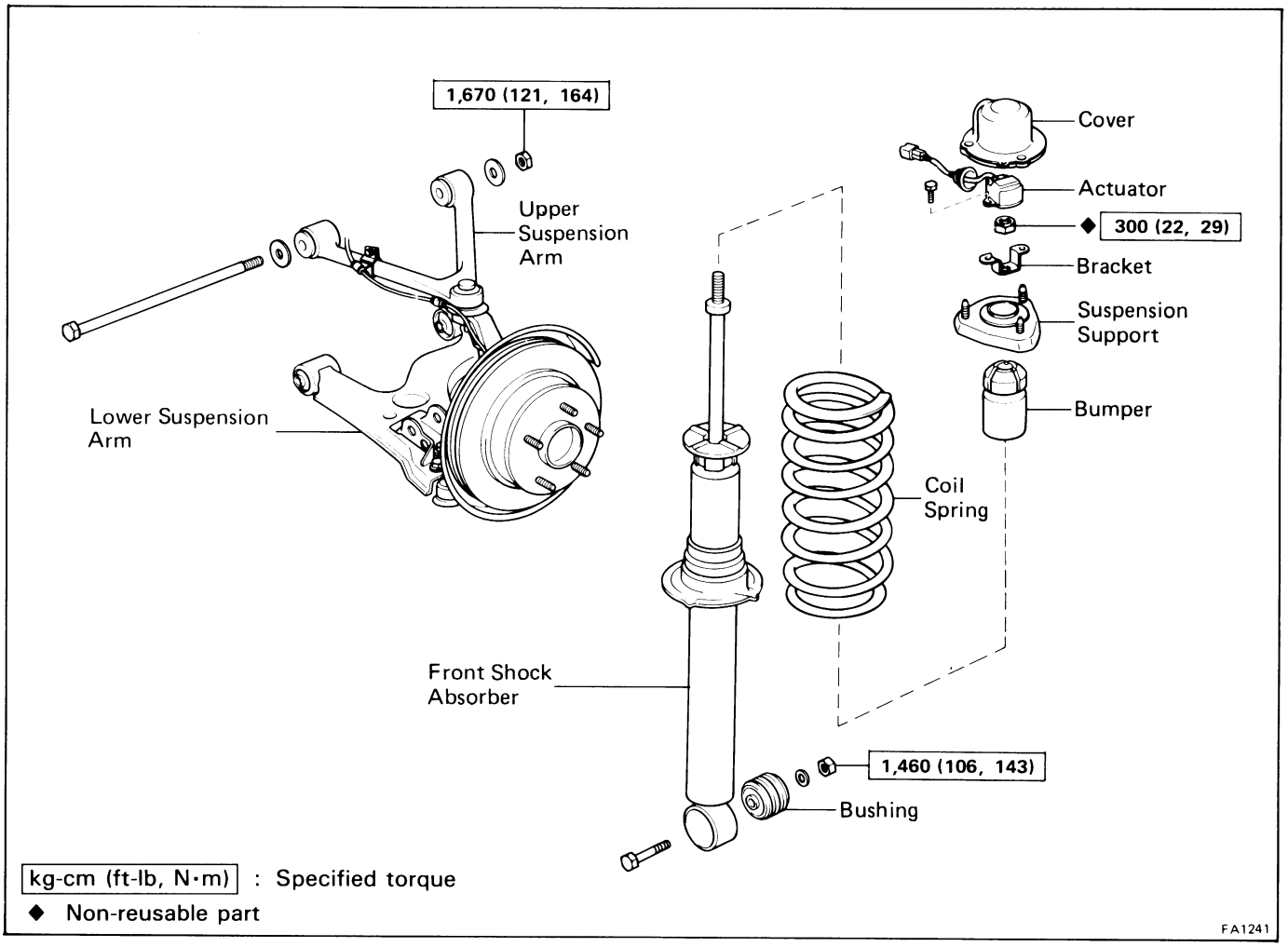

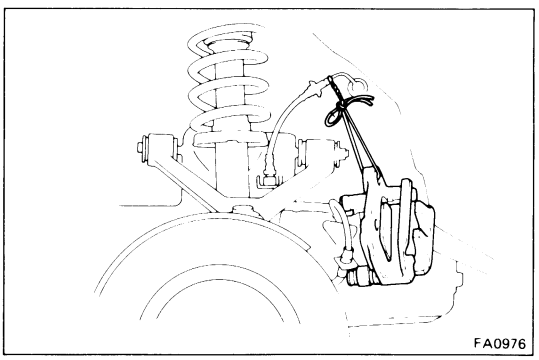

REMOVAL OF FRONT SHOCK ABSORBER

1. **REMOVE DISC BRAKE CALIPER**

   Remove the disc brake caliper from the steering knuckle, and suspened it with wire.

2. **REMOVE TEMS ACTUATOR (w/ TEMS only)**

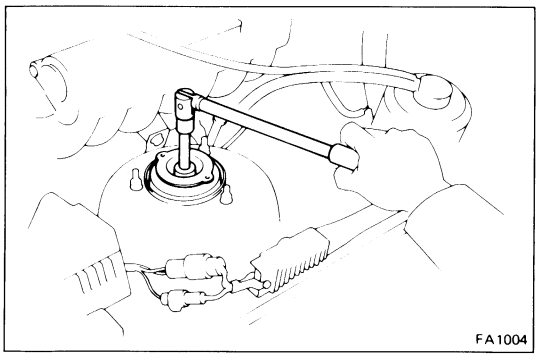

3. **LOOSEN PISTON ROD LOCK NUT**

   HINT: Loosen the piston rod lock nut until it can turn by hand.

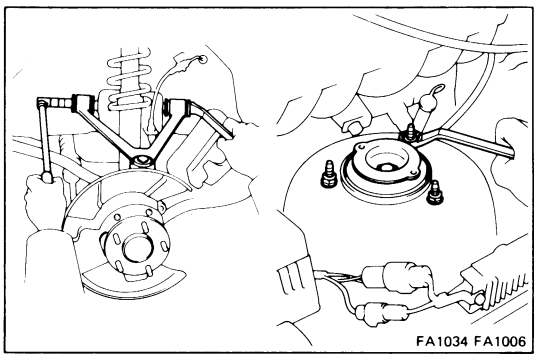

4. **DISCONNECT UPPER SUSPENSION ARM FROM BODY**

5. **DISCONNECT SHOCK ABSORBER FROM BODY**

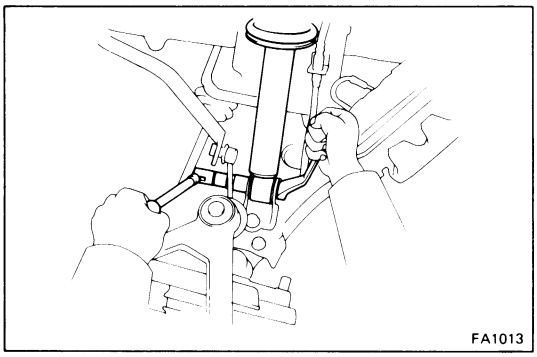

6. **DISCONNECT SHOCK ABSORBER FROM LOWER SUSPENSION ARM**

7. **REMOVE SHOCK ABSORBER**

DISASSEMBLY OF FRONT SHOCK ABSORBER

(See page FA-17)

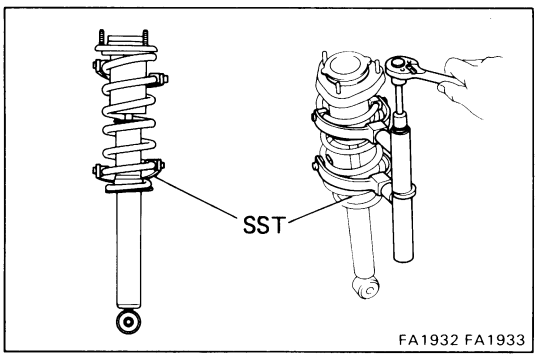

1. **REMOVE COIL SPRING**

   (a) Using SST, compress the coil spring, and remove the piston rod lock nut.

   SST 09727-30020

   (b) Remove the suspension support, spring, dust cover and bumper.

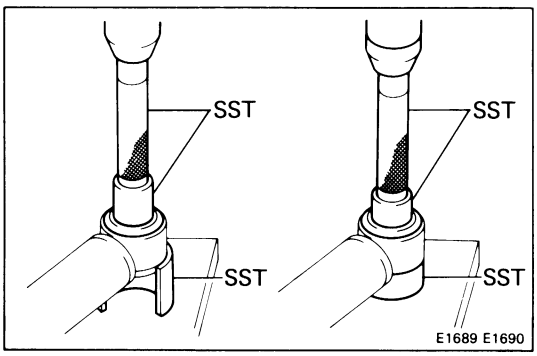

2. **IF NECESSARY REPLACE SHOCK ABSORBER BUSHING**

   (a) Using SST, press out the shock absorber bushing.

   SST 09710-30020 (09710-03020, 09710-03080, 09710-03130)

   (b) Using SST, press in a new shock absorber bushing.

   SST 09710-30020 (09710-03020, 09710-03050 09710-03130)

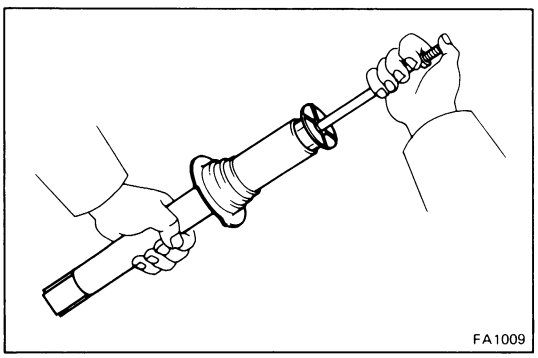

3. **INSPECT OPERATION OF SHOCK ABSORBER**

   (a) While pushing the piston rod check that the pull throughout the stroke is even, and there is no abnormal resistance or noise.

   (b) Push the piston rod in fully and release it.
   Check that it returns at a constant speed throughout.

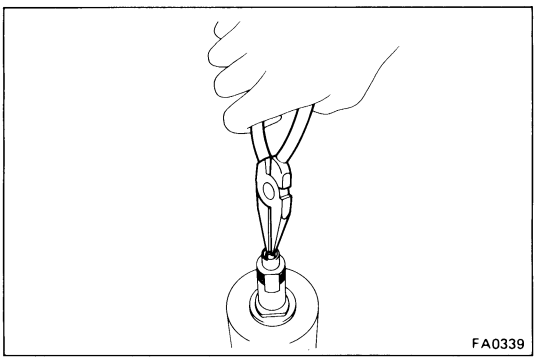

(c) Check that control rod in the piston rod can be turned easily with a needle nose pliers.

Starting torque: (for reference)
Less than 200 g-cm (0.17 in.-lb, 0.02 N·m)

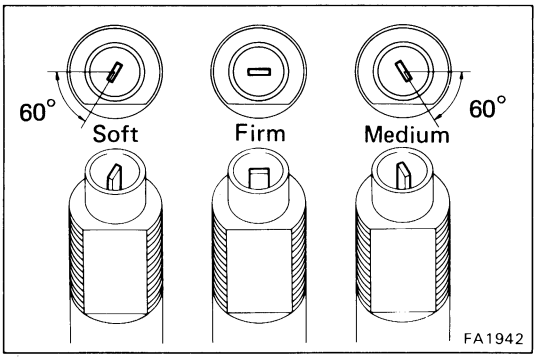

With the control positioned as shown in the illustration, check that there is a difference in damping at each position.

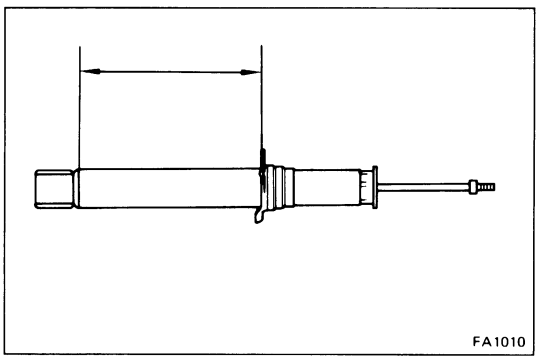

4. DISCARD SHOCK ABSORBER

Before discarding the shock absorber, drill a hole 2 — 3 mm (0.079 — 0.118 in.) in diameter at the location as shown in the figure to release the gas inside.

NOTICE:
- **When drilling, chips may fly out, so work carefully.**
- **The gas is colorless, odorless and non-poisonous.**

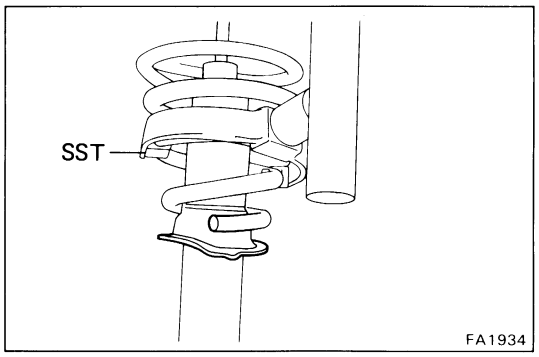

INSTALLATION OF SHOCK ABSORBER

(See page FA-17)

1. INSTALL SPRING BUMPER, DUST COVER, COIL SPRING AND SUSPENSION SUPPORT

(a) Using SST, compress the coil spring.

SST 09727-22032 or 09727-30020

(b) Install the spring bumper and dust cover to the suspension support.

(c) Align the coil spring end with the lower seat hollow and install the coil spring.

(d) Align the suspension support with the piston rod and install it.

(e) Align the suspension support with the shock absorber lower bracket as shown.

(f) Temporarily install a new nut to the piston rod.

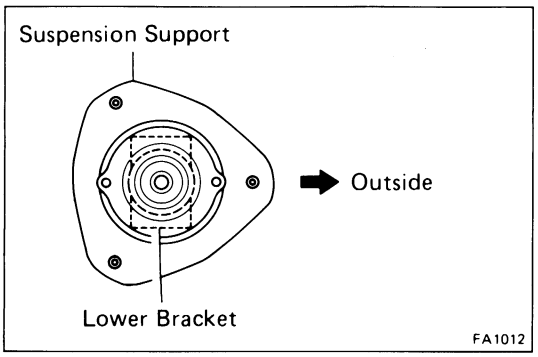

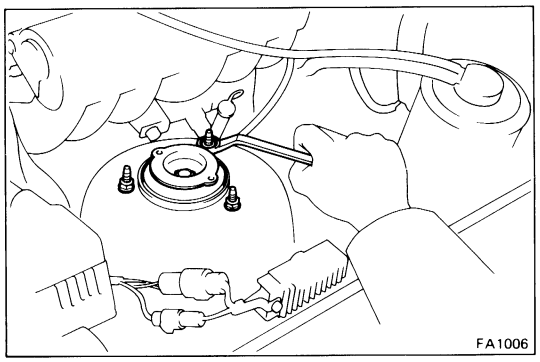

2. **INSTALL SHOCK ABSORBER TO BODY**

Install the shock absorber to the body with the three nuts, and torque the nuts.

Torque: 360 kg-cm (26 ft-lb, 35 N·m)

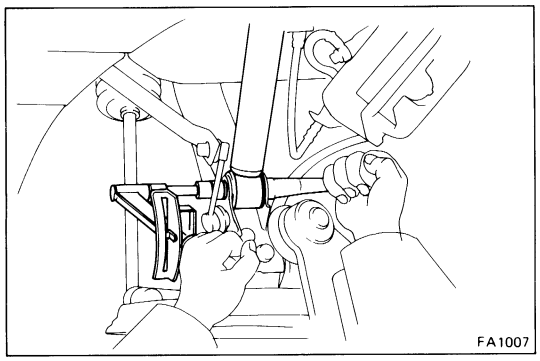

3. **CONNECT SHOCK ABSORBER TO LOWER SUSPENSION ARM**

Torque: 1,460 kg-cm (106 ft-lb, 143 N·m)

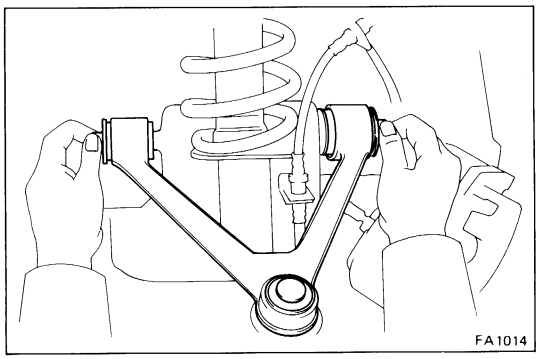

4. **TEMPORARILY CONNECT UPPER SUSPENSION ARM TO BODY**

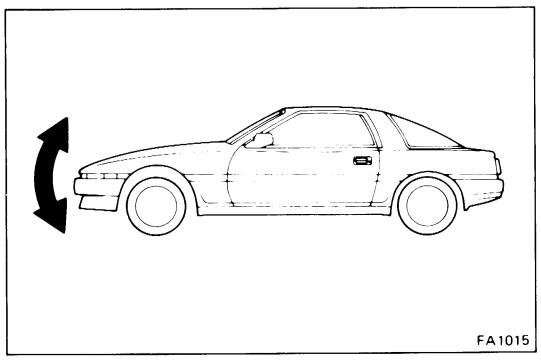

5. **TORQUE UPPER SUSPENSION ARM MOUNTING BOLT**

(a) Remove the stands and bounce the vehicle up and down to stabilize the suspension.

(b) Torque the mounting bolt and nut with the vehicle weight on the suspension.

Torque: 1,670 kg-cm (121 ft-lb, 164 N·m)

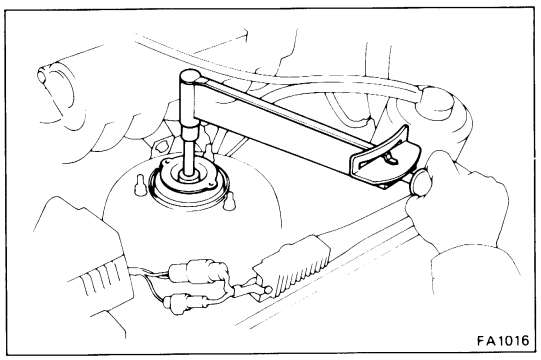

6. **TORQUE PISTON ROD LOCK NUT**

Torque: 300 kg-cm (22 ft-lb, 29 N·m)

7. **INSTALL TEMS ACTUATOR (w/ TEMS only)**

FRONT SUSPENSION

COMPONENTS

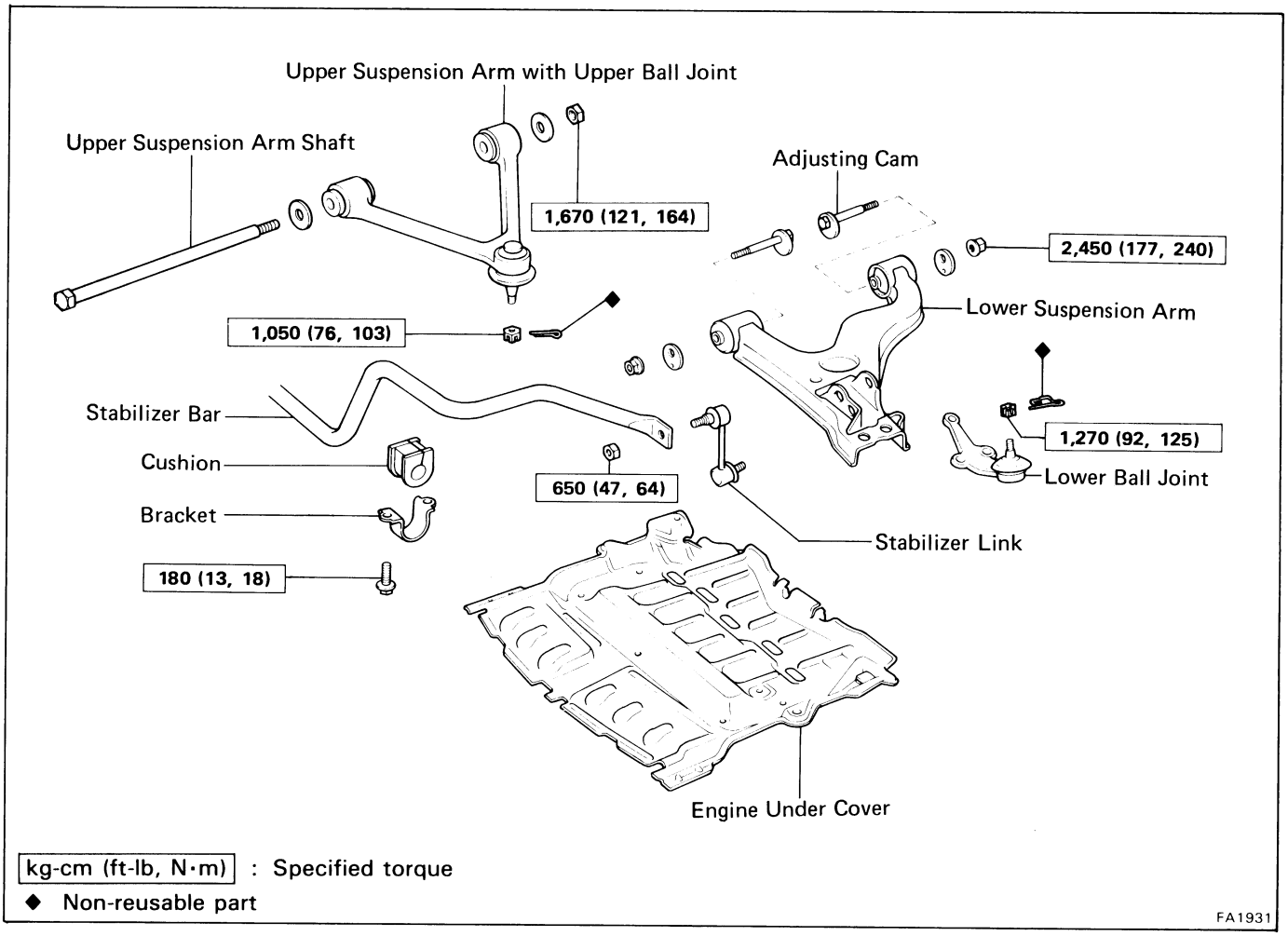

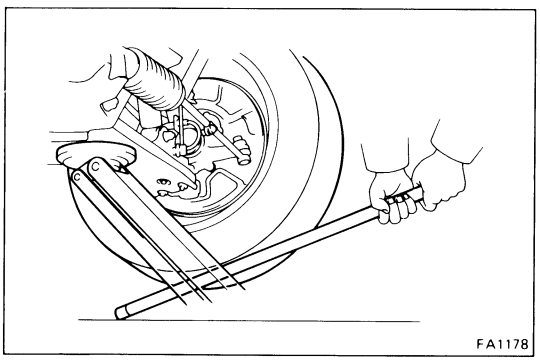

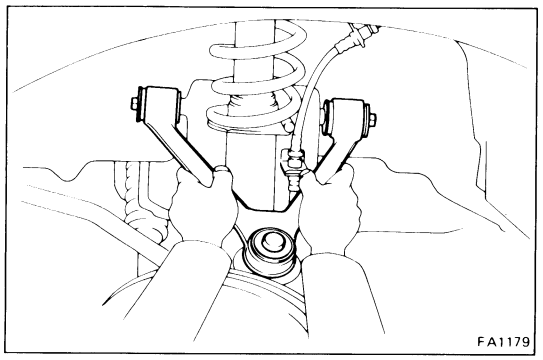

Ball Joints

INSPECTION OF BALL JOINT

1. **INSPECT LOWER BALL JOINT EXCESSIVE LOOSENESS**
   (a) Jack up the front of the vehicle and support it with stands.
   (b) Make sure the front wheels are in a straight-ahead position, and depress the brake pedal.
   (c) Jack up the lower suspension arm until there is about half a load on the front coil spring.
   (d) Move the lower suspension arm up and down and check that the ball joint has no excessive play.

   Maximum lower ball joint vertical play: 0.3 mm (0.012 in.)

2. **INSPECT UPPER BALL JOINT EXCESSIVE LOOSENESS**
   Remove the front wheels and move the upper suspension arm up and down and check the ball joint has no excessive play.

   Maximum upper ball joint vertical play: 0 mm (0 in.)

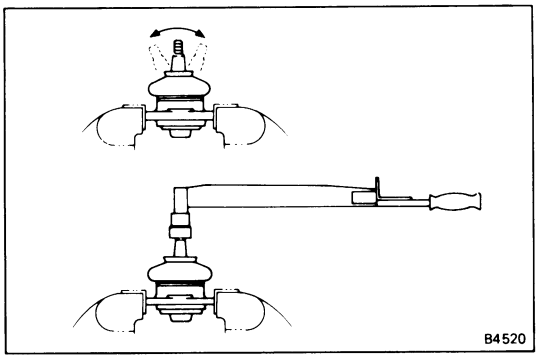

3. **INSPECT BALL JOINT FOR ROTATION CONDITION**
   (a) Remove the ball joints.
   (b) As shown, flip the ball joint stud back and forth 5 times before install the nut.
   (c) Using a torque gauge, turn the nut continuously one turn per 2-4 seconds and take the torque reading on the 5th turn.

   Torque (turning):
   Lower ball joint
   0 — 5 kg-cm
   (0 — 4.3 in.-lb, 0 — 0.5 N·m)
   Upper ball joint
   10 — 35 kg-cm
   (8.7 — 30.0 in.-lb, 1.0 — 3.4 N·m)

REMOVAL OF BALL JOINTS

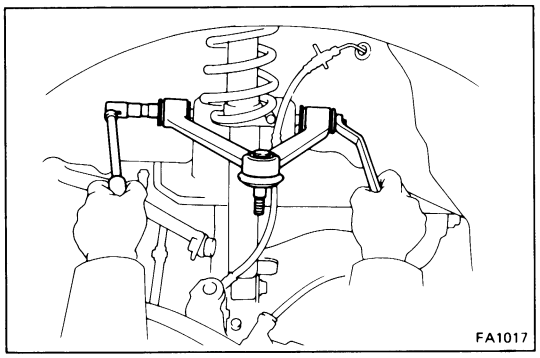

1. **REMOVE STEERING KNUCKLE**
   (See page FA-8)

2. **REMOVE UPPER SUSPENSION ARM**
   (See page FA-23)

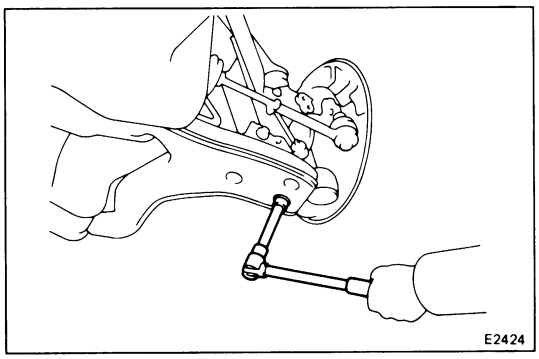

3. **REMOVE LOWER BALL JOINT**
   (a) Remove the three nuts, bolt and attachment plate.
   (b) Remove the lower ball joint from the lower suspension arm.

INSTALLATION OF BALL JOINTS

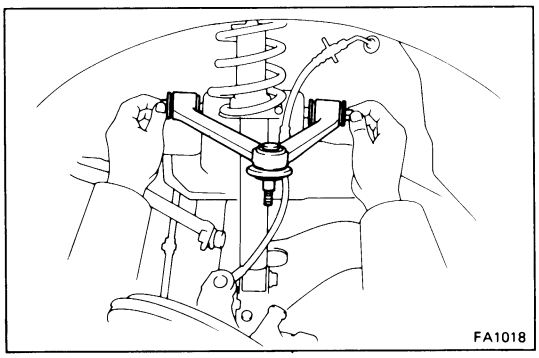

1. **TEMPORARILY INSTALL UPPER SUSPENSION ARM TO BODY**

2. **INSTALL LOWER BALL JOINT**
   Install the lower ball joint to the lower suspension arm with the attachment plate, bolt and nut.
   Torque: 1,300 kg-cm (94 ft-lb, 127 N·m)

3. **INSTALL STEERING KNUCKLE**
   (See page FA-14)

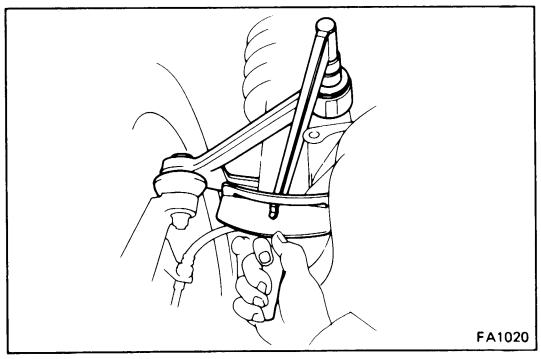

4. **TORQUE UPPER SUSPENSION ARM MOUNTING BOLT AND NUT**
   (a) Install the wheels.
   (b) Remove the stands and bounce the vehicle up and down to stabilize the suspension.
   (c) Torque the mounting bolt and nut with the vehicle weight on the suspension.
   Torque: 1,670 kg-cm (121 ft-lb, 164 N·m)

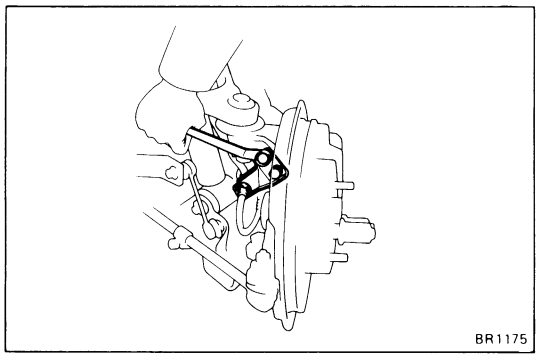

Upper Suspension Arm

(See page FA-21)

REMOVAL OF UPPER SUSPENSION ARM

1. **DISCONNECT UPPER SUSPENSION ARM FROM STEERING KNUCKLE**

   (a) Remove the brake hose bracket from steering knuckle.

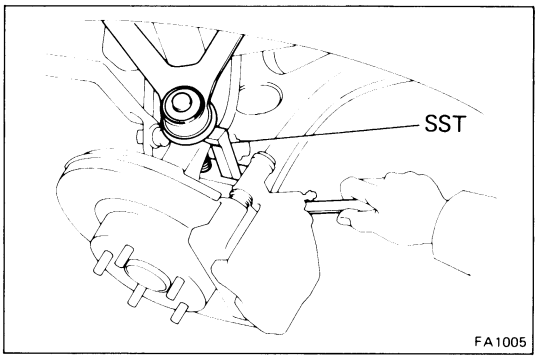

   (b) Remove the cotter pin and nut.

   (c) Using SST, disconnect the upper suspension arm from the steering knukle.

   SST 09628-62011

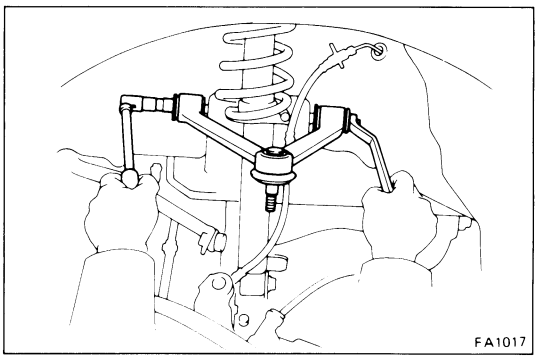

2. **REMOVE UPPER SUSPENSION ARM**

   Remove the upper suspension arm mounting bolt and nut, and remove the upper suspension arm.

INSTALLATION OF UPPER SUSPENSION ARM

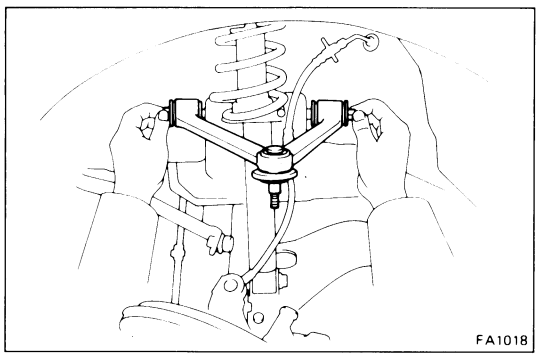

1. **TEMPORARILY INSTALL UPPER SUSPENSION ARM TO BODY**

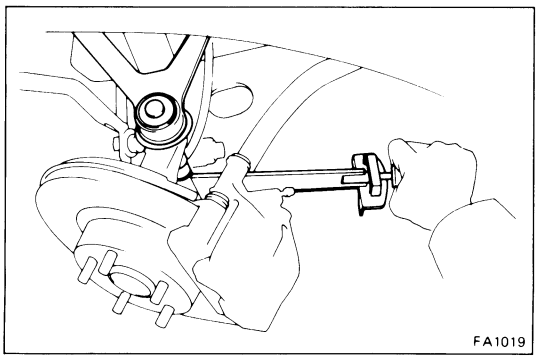

2. **CONNECT UPPER SUSPENSION ARM TO STEERING KNUCKLE**

   (a) Install and torque the nut.

   Torque: 1,050 kg-cm (76 ft-lb, 103 N·m)

   (b) Install a new cotter pin.

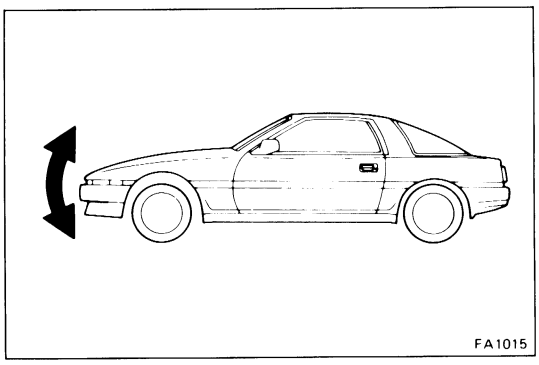

3. **TORQUE UPPER SUSPENSION ARM MOUNTING BOLT AND NUT**
   (a) Install the wheels.
   (b) Remove the stands and bounce the vehicle up and down to stabilize the suspension.

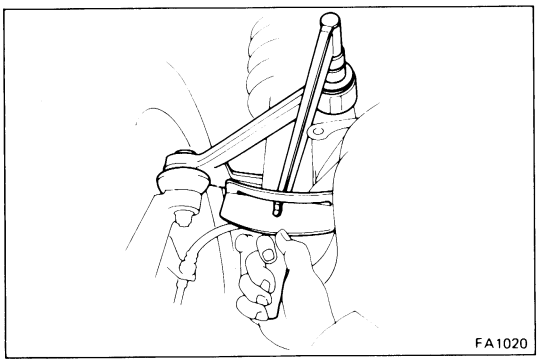

   (c) Torque the mounting bolt and nut with the vehicle weight on the suspension.

   Torque: 1,670 kg-cm (121 ft-lb, 164 N·m)

Lower Suspension Arm

(See page FA-21)

REMOVAL OF LOWER SUSPENSION ARM

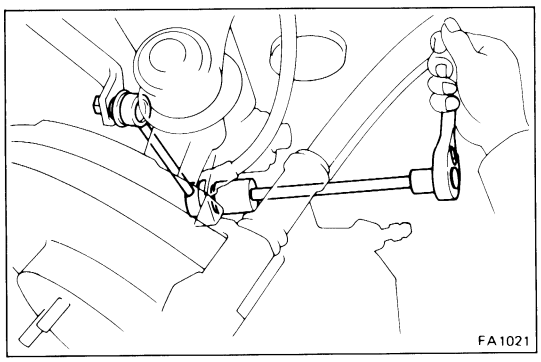

1. **DISCONNECT STABILIZER BAR LINK FROM LOWER SUSPENSION ARM**

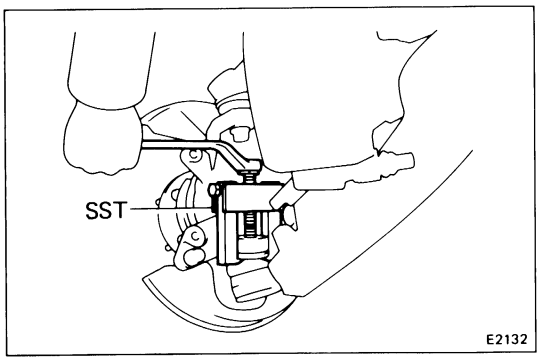

2. **DISCONNECT STEERING KNUCKLE FROM LOWER BALL JOINT**
   (a) Remove the clip and nut.
   (b) Using SST, disconnect the steering knuckle from the lower ball joint.

   SST 09628-62011

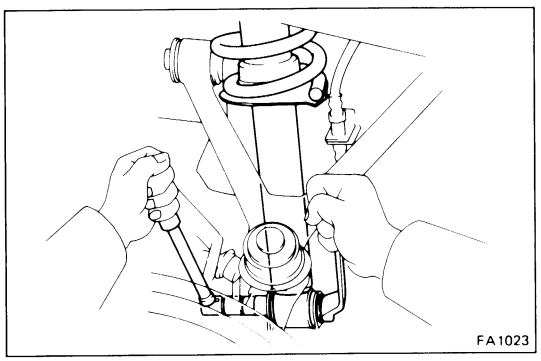

3. **DISCONNECT LOWER SUSPENSION ARM FROM SHOCK ABSORBER**

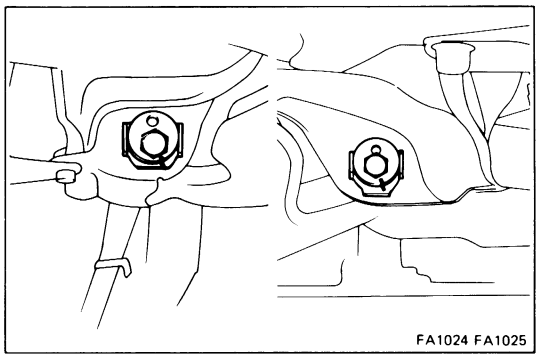

4. **REMOVE LOWER SUSPENSION ARM**

(a) Before loosen the adjusting cams, place matchmarks on the front and rear adjusting cams and body.

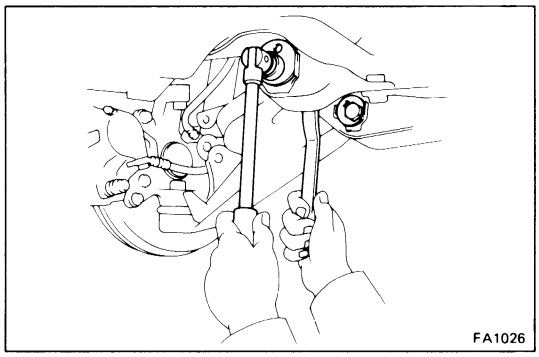

(b) Remove the nuts and adjusting cams, and remove the lower suspension arm.

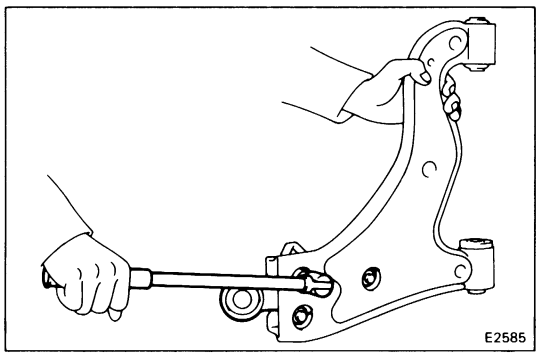

5. **REMOVE LOWER BALL JOINT FROM LOWER SUSPENSION ARM**

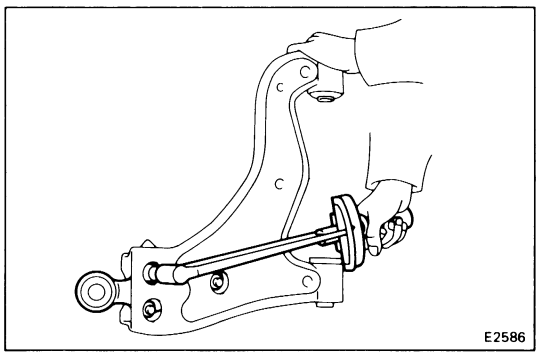

INSTALLATION OF LOWER SUSPENSION ARM

(See page FA-21)

1. **INSTALL LOWER BALL JOINT TO LOWER SUSPENSION ARM**

   Torque: 1,300 kg-cm (94 ft-lb, 127 N·m)

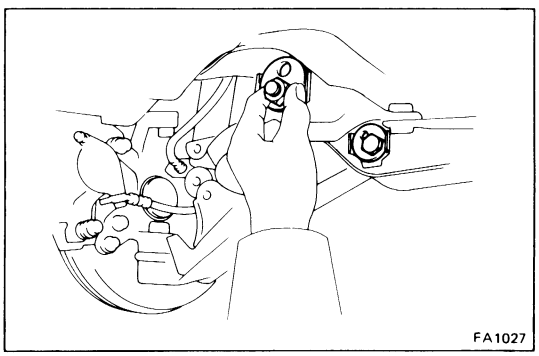

2. **INSTALL LOWER SUSPENSION ARM AND TEMPORARILY INSTALL ADJUSTING CAMS AND NUTS**

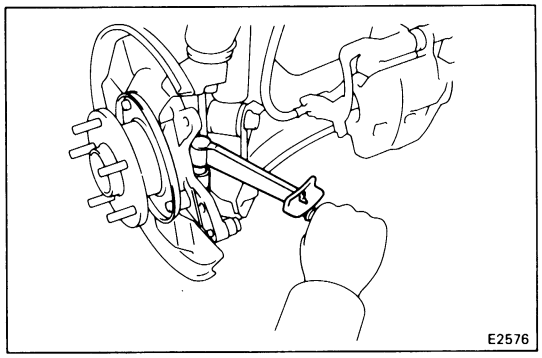

3. **CONNECT LOWER BALL JOINT TO STEERING KNUCKLE**
   (a) Install and torque the lock nut.
   Torque: 1,270 kg-cm (92 ft-lb, 125 N·m)
   (b) Install a new clip.

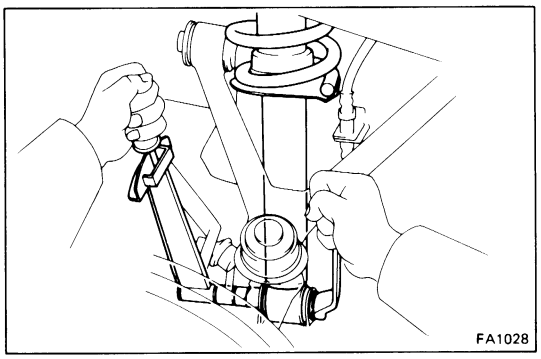

4. **CONNECT SHOCK ABSORBER TO LOWER SUSPENSION ARM**
   Torque: 1,460 kg-cm (106 ft-lb, 143 N·m)

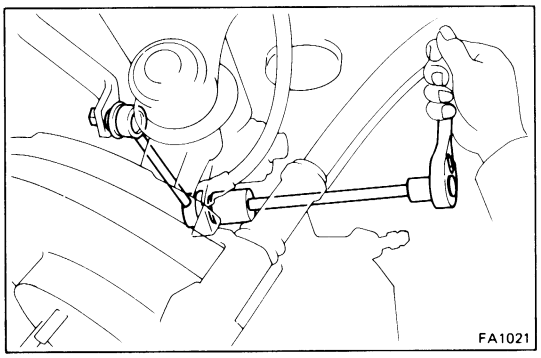

5. **CONNECT STABILIZER BAR LINK TO LOWER SUSPENSION ARM**
   Torque: 650 kg-cm (47 ft-lb, 64 N·m)

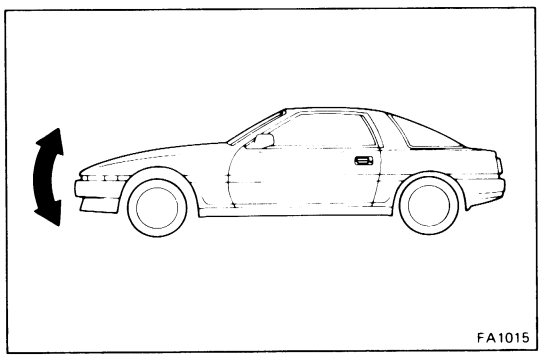

6. **TORQUE ADJUSTING CAM NUTS**
   (a) Install the wheels.
   (b) Remove the stands and bounce the vehicle up and down to stabilize the suspension.

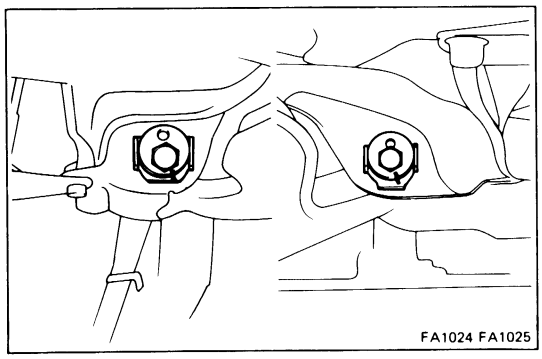

   (c) Align the matchmarks and torque the adjusting cam nuts with the vehicle weight on the suspension.
   Torque: 2,450 kg-cm (177 ft-lb, 240 N·m)

7. **CHECK FRONT WHEEL ALIGNMENT**
   (See page FA-3)

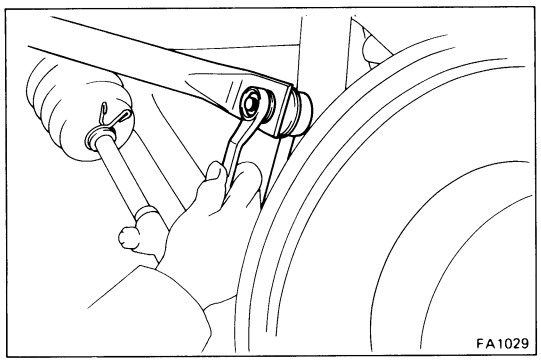

Stabilizer Bar and Link

(See page FA-21)

REMOVAL OF STABILIZER BAR AND LINK

1. **DISCONNECT STABILIZER LINK FROM STABILIZER BAR**

   Remove the nut and disconnect the stabilizer link from stabilizer bar.

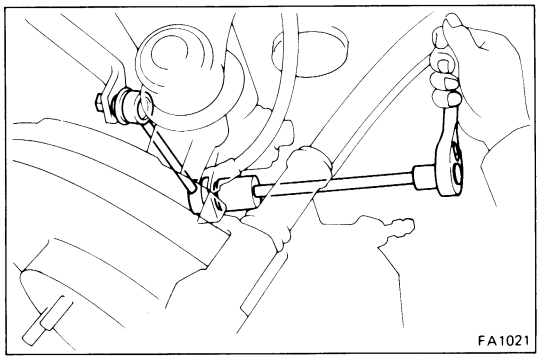

2. **REMOVE STABILIZER LINK FROM LOWER SUSPENSION ARM**

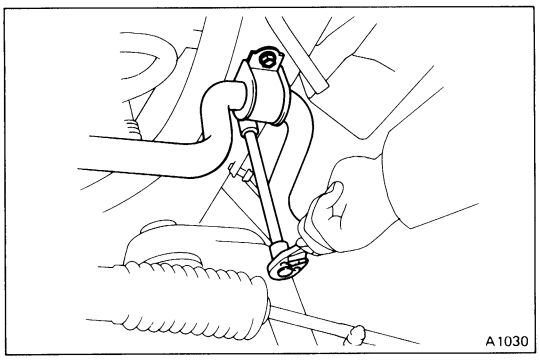

3. **REMOVE STABILIZER BAR FROM BODY**

   Remove the bolts and stabilizer bar with cushions and brackets.

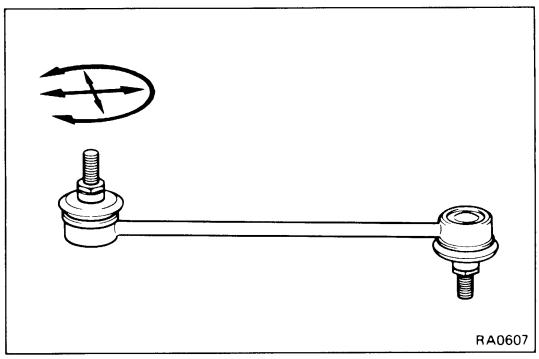

INSPECTION OF STABILIZER LINK

INSPECT STABILIZER LINK

Rotate the ball joint stud in all directions.

If the movement is not smooth and free, replace the stabilizer link.

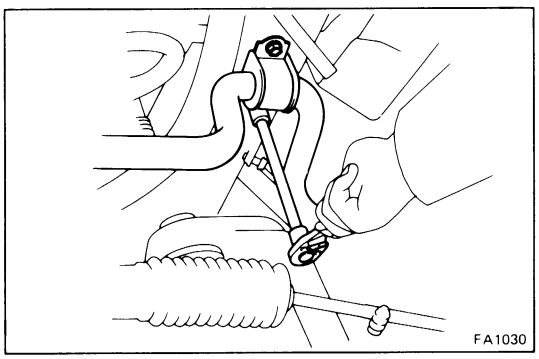

INSTALLATION OF STABILIZER BAR AND LINK

1. **INSTALL STABILIZER BAR TO BODY**

   Torque: 180 kg-cm (13 ft-lb, 18 N·m)

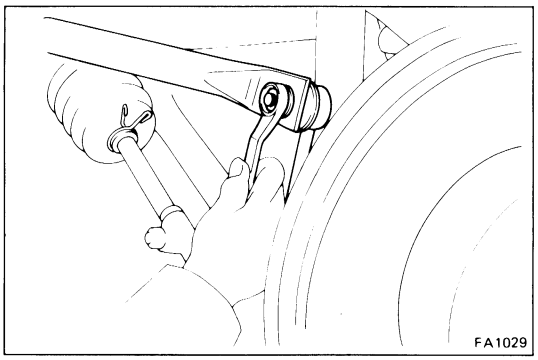

2. **INSTALL STABILIZER LINK TO STABILIZER BAR**

   Torque: 650 kg-cm (47 ft-lb, 64 N·m)

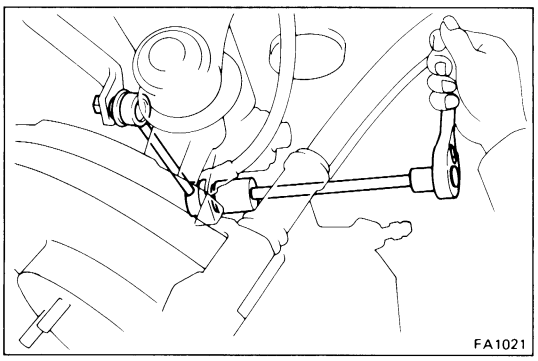

3. **CONNECT STABILIZER LINK TO LOWER SUSPENSION ARM**

   Torque: 650 kg-cm (47 ft-lb, 64 N·m)

TOYOTA ELECTRONIC MODULATED SUSPENSION (TEMS)

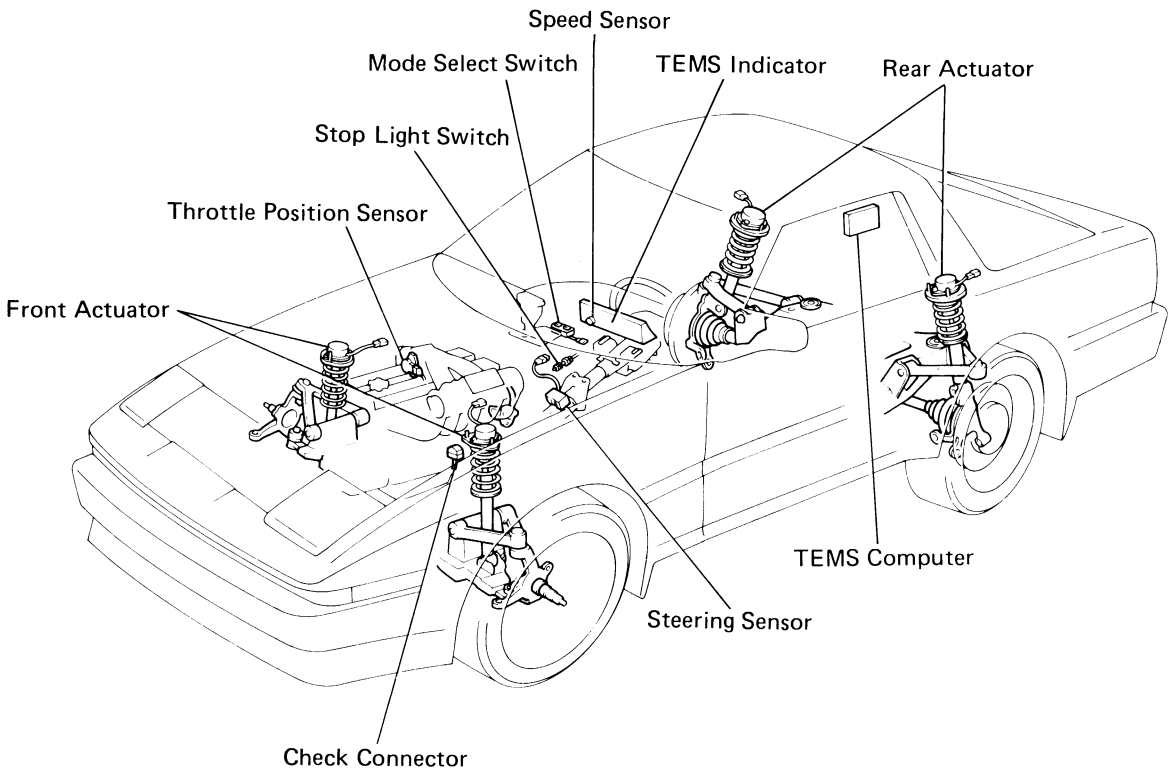

FA1939

Troubleshooting

PRELIMINARY CHECK

- **Check cold tire inflation pressure.**
- **Check lubrication of suspension and steering linkage.**
- **Check chassis ground clearance and wheel alignment.**
- **Check battery voltage above 12 volts.**
- **Check that all connector are secure.**

Troubleshooting No. 1: Initial check

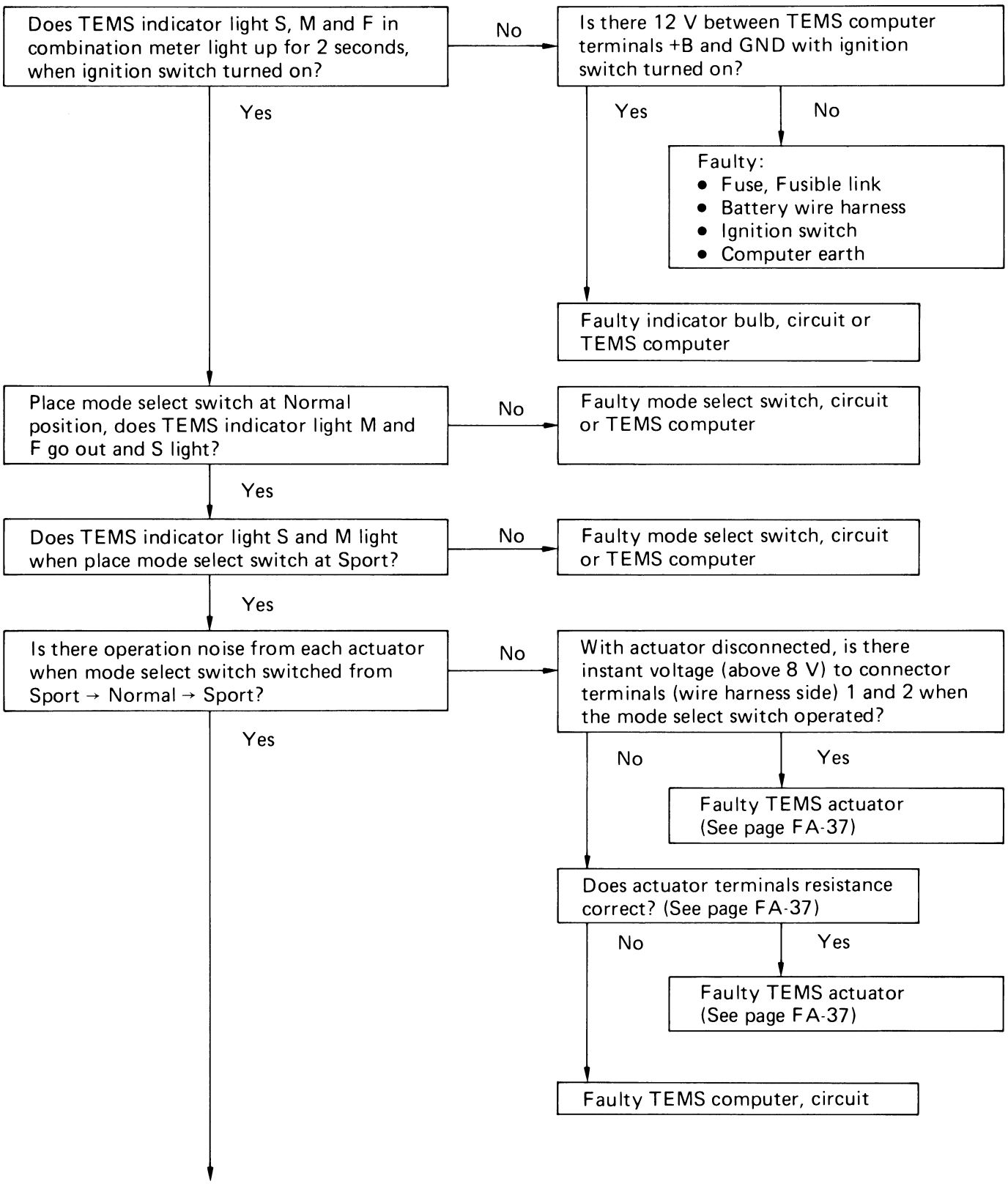

Continued on page FA-31

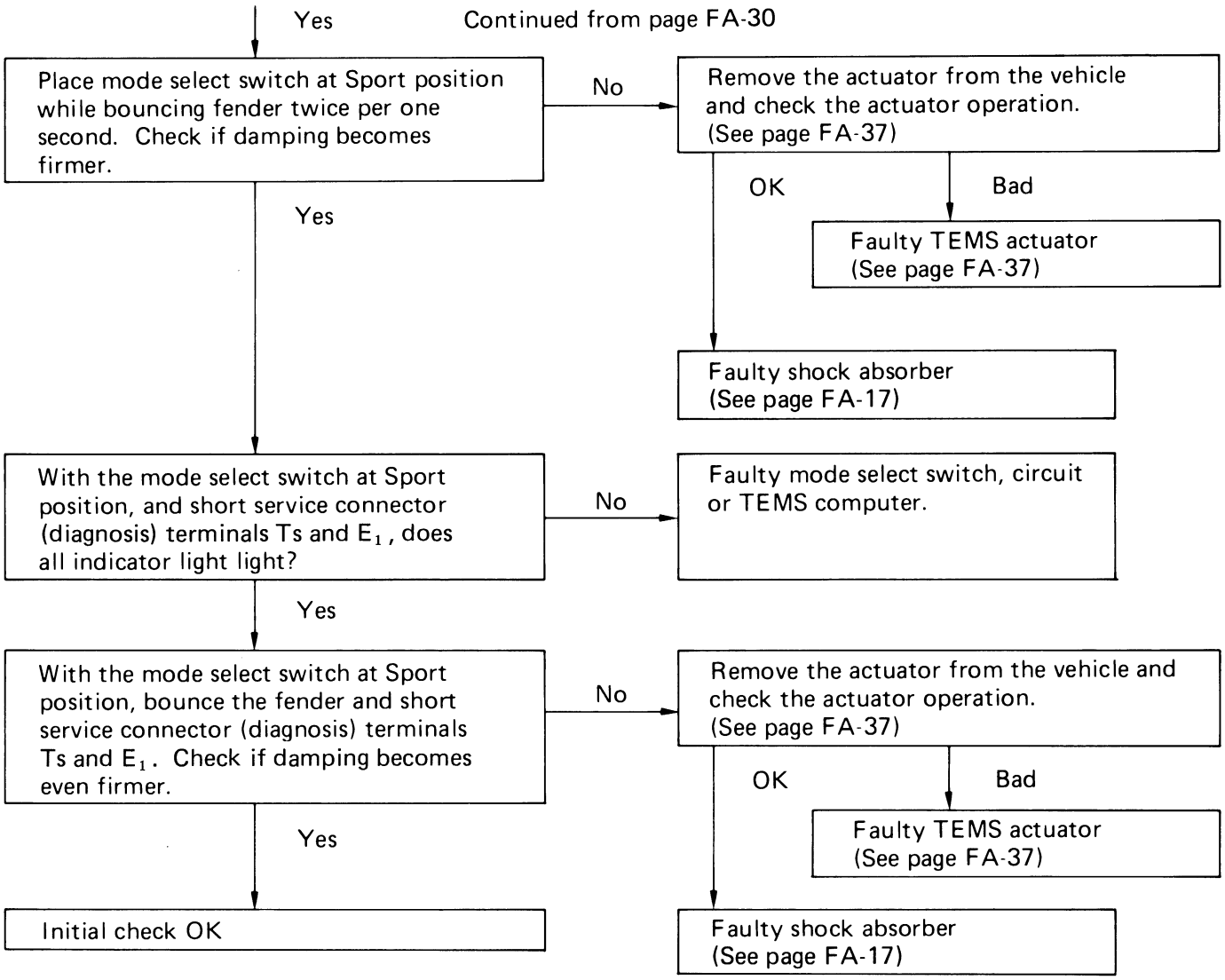
Yes
Continued from page FA-30
Place mode select switch at Sport position while bouncing fender twice per one second. Check if damping becomes firmer.
No
Remove the actuator from the vehicle and check the actuator operation. (See page FA-37)
OK
Bad
Faulty TEMS actuator (See page FA-37)
Faulty shock absorber (See page FA-17)
Yes
With the mode select switch at Sport position, and short service connector (diagnosis) terminals Ts and E1, does all indicator light light?
No
Faulty mode select switch, circuit or TEMS computer.
Yes
With the mode select switch at Sport position, bounce the fender and short service connector (diagnosis) terminals Ts and E1. Check if damping becomes even firmer.
No
Remove the actuator from the vehicle and check the actuator operation. (See page FA-37)
OK
Bad
Faulty TEMS actuator (See page FA-37)
Yes
Initial check OK
Faulty shock absorber (See page FA-17)

Troubleshooting No. 2: No anti-squat function

Initial check
(See page FA-30)

↓

Do TEMS indicator lights indicate as shown below on sudden acceleration?

→ Yes → Road test again.

	Ignition ON Do not start engine			Sudden acceleration		
Lights / Position	S	M	F	S	M	F
Normal	ON	OFF	OFF	ON	ON	ON
Sport	ON	ON	OFF	ON	ON	ON

↓ No

Check throttle position sensor and engine ECU circuit.

→ Bad → Repair or replace.

↓ OK

Check speed sensor and circuit.

→ Bad → Repair or replace.

↓ OK

Try another TEMS computer.

Troubleshooting No. 3: No anti-roll function

Initial check
(See page FA-30)

↓

Do TEMS indicator lights indicate as shown below when the steering wheel is turned sharply while driving at 40 km/h (25 mph)?

	Vehicle speed above 40 km/h (25 mph)			Sharp turn		
Lights / Position	S	M	F	S	M	F
Normal	ON	OFF	OFF	ON	ON	ON
Sport	ON	ON	OFF	ON	ON	ON

Yes → Road test again.

No ↓

Check steering sensor and circuit.

Bad → Repair or replace.

OK ↓

Check speed sensor and circuit.

Bad → Repair or replace.

OK ↓

Try another TEMS computer.

Troubleshooting No. 4: No anti-dive function

Initial check
(See page FA-30)

↓

Do TEMS indicator lights indicate as shown below when brake is depressed while driving above 60 km/h (37 mph)?

	Vehicle speed above 60 km/h (37 mph)			Depress brake pedal		
Lights / Position	S	M	F	S	M	F
Normal	ON	OFF	OFF	ON	ON	ON
Sport	ON	ON	OFF	ON	ON	ON

Yes → Road test again.

No ↓

Check stop light switch and circuit.

Bad → Repair or replace.

OK ↓

Check speed sensor and circuit.

Bad → Repair or replace.

OK ↓

Try another TEMS computer.

Troubleshooting No. 5: No high-speed response function

HINT: The high-speed response function only during normal base auto, and not during sport base auto.

Initial check
(See page FA-30)

↓

Do the TEMS indicator lights indicate as shown below when vehicle is gradually accelerated from below 100 km/h (63 mph) to above 120 km/h (75 mph)?

	Vehicle speed less than 100 km/h (63 mph)			Vehicle speed above 120 km/h (75 mph)		
Lights / Position	S	M	F	S	M	F
Normal	ON	OFF	OFF	ON	ON	OFF

Yes → Road test again.

No ↓

Check speed sensor and circuit.

Bad → Repair or replace.

OK ↓

Try another TEMS computer.

ELECTRONIC CONTROL SYSTEM

ELECTRONIC CIRCUIT

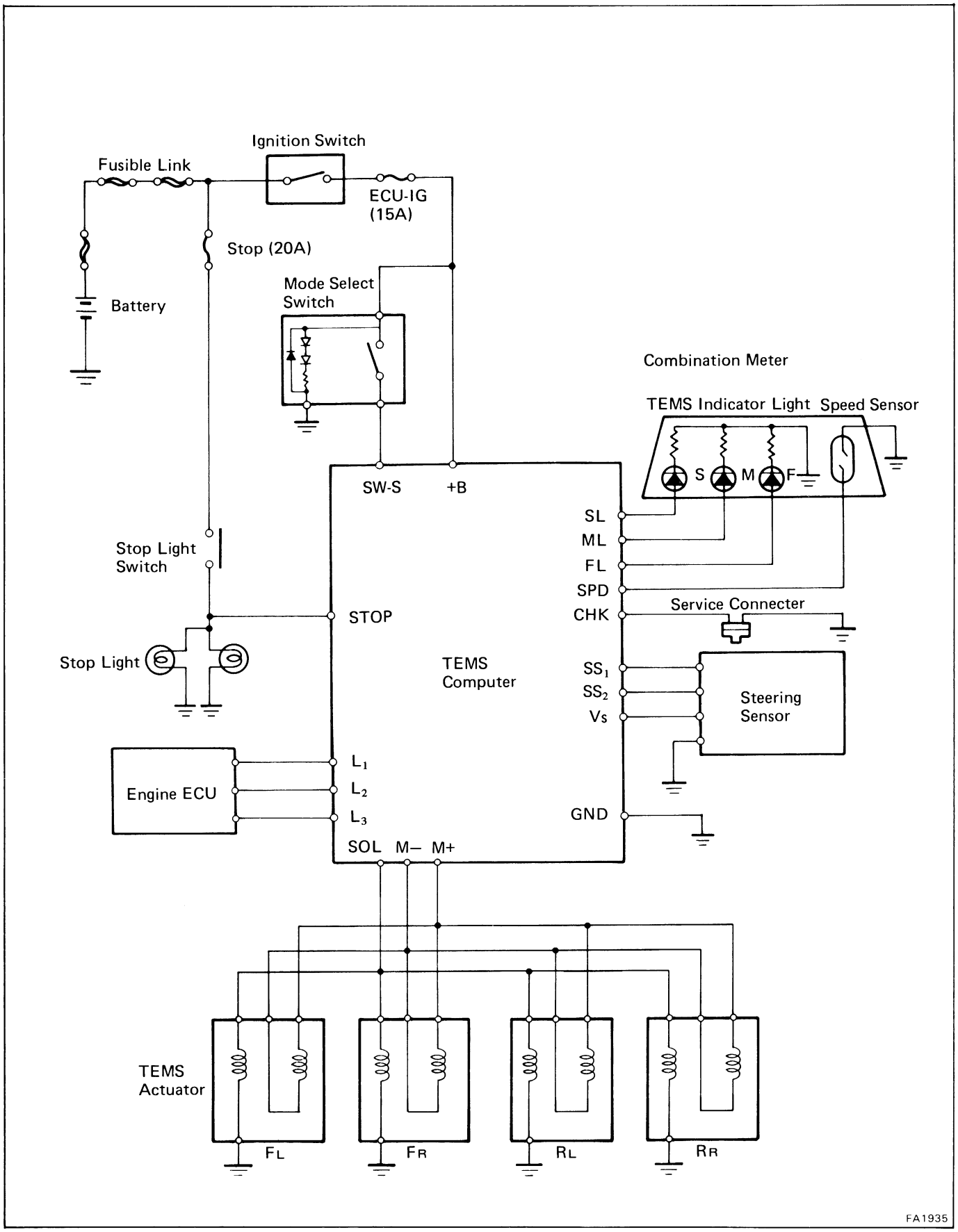

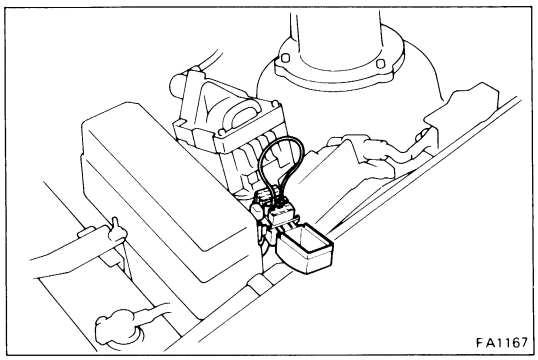

Front and Rear Actuator

1. PREPARATION FOR REMOVAL

(a) Ignition switch on and mode select switch at "SPORT" position.

(b) Service connector (Diagnosis) terminals T_S and E_1 short circuited.

(c) In this condition, turn the ignation switch off, and remove the battery negative terminal.

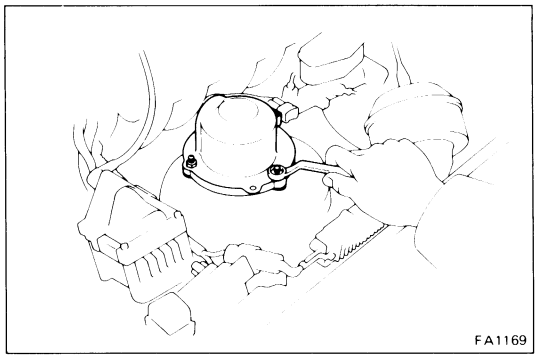

2. REMOVE ACTUATOR

(a) Disconnect the actuator connector.

(b) Remove the actuator cover. (Front only)

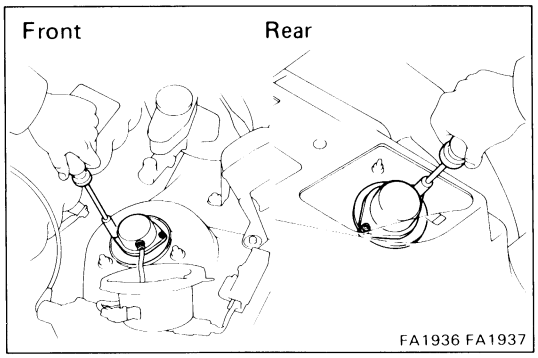

(c) Remove the two actuator mounting bolts and pull out the actuator from the shock absorber.

HINT: Pull the actuator out slowly straight and slowly to prevent bending the absorber control rod.

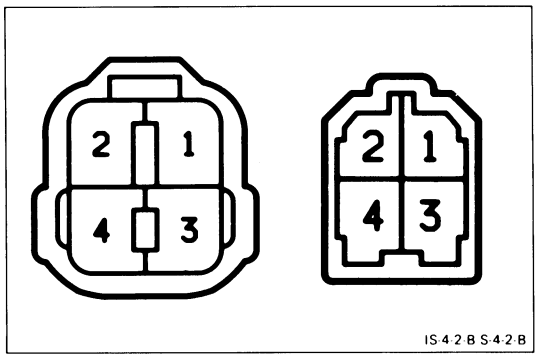

3. CHECK ACTUATOR VALVE POSITION

Check the position where the shaft stop when battery voltage is applied to each actuator terminals.

NOTICE: Do not apply the battery voltage longer than 2 seconds so as to avoid burning out the solenoid and motor coil in the actuator.

+: Battery positive terminal
−: Battery negative terminal

Position \ Terminals		Motor		Solenoid	
		1	2	3	4
SOFT	MEDIUM	+	−		
SOFT	FIRM	+	−	+	−
MEDIUM	SOFT	−	+		
MEDIUM	FIRM	−	+	+	−
FIRM	SOFT	−	+		
FIRM	MEDIUM	+	−		

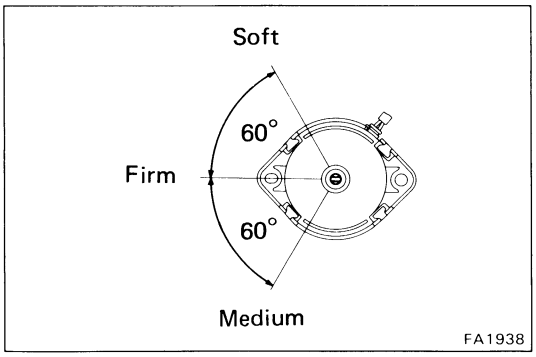

HINT: When switching over from normal or sport to hard, run the motor with the solenoid ON.

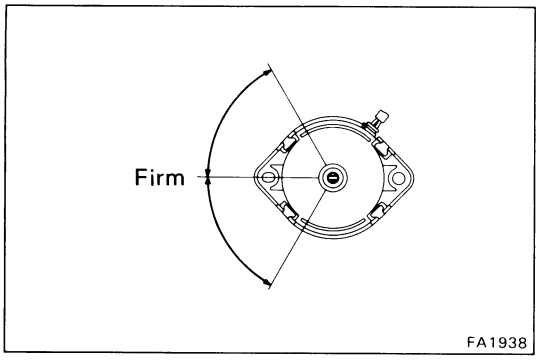

4. INSTALL ACTUATOR

(a) Check that the actuator valve is faced toward the firm position.

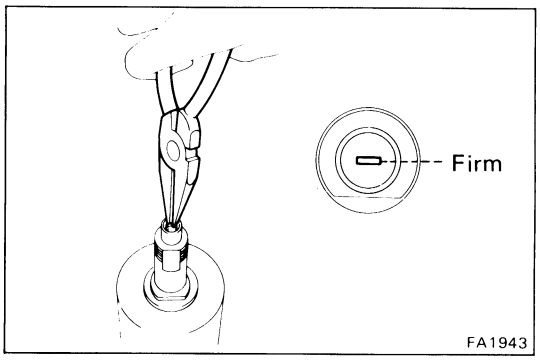

(b) Check that the absorber control rod is facing toward the firm position.

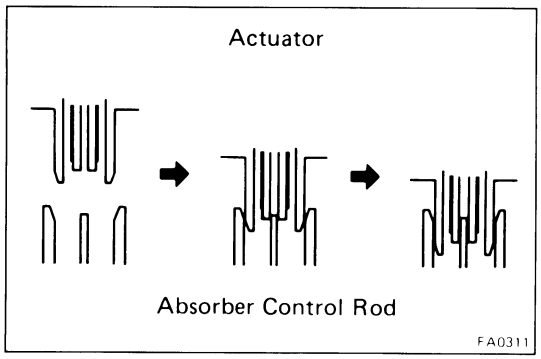

(c) Insert the absorber control rod into the groove of the actuator valve, and secure the actuator with the two bolts.

HINT: In the case of front actuator, fasten the actuator wire harness so that it faces the front of the vehicle.

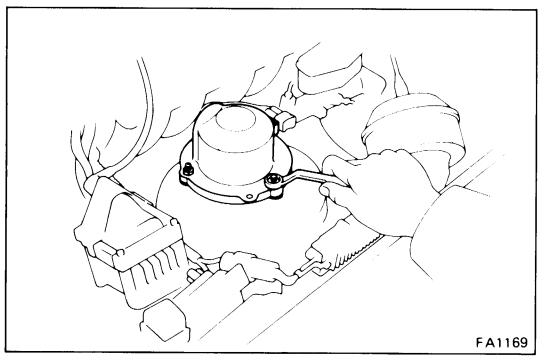

(d) Install the actuator cover. (Front only)

(e) Connect the actuator connector.

(f) Remove the service wire from the service connector.

(g) Check the TEMS operation.
(See page FA-29)

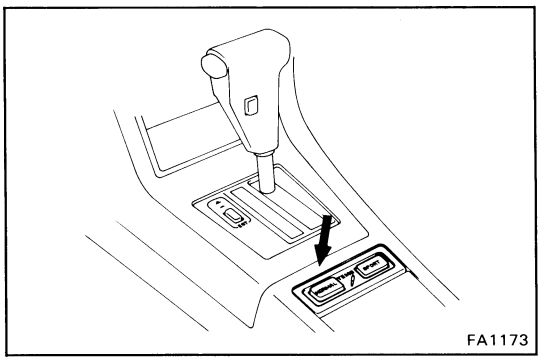

Steering Sensor

1. CHECK STEERING SENSOR SYSTEM

(a) Position the steering in the straightaway position.

(b) Place the mode select switch in the "Normal" position.

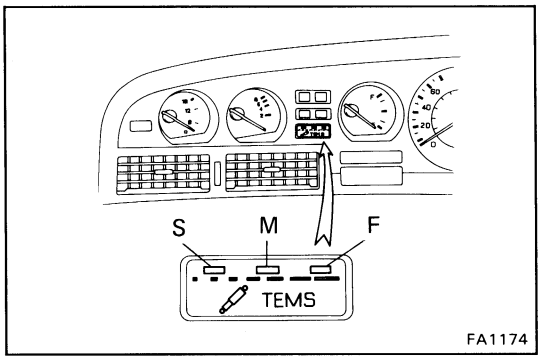

(c) Using a sub wire harness, short the service connector (Diagnosis) terminals T_S and E_1.

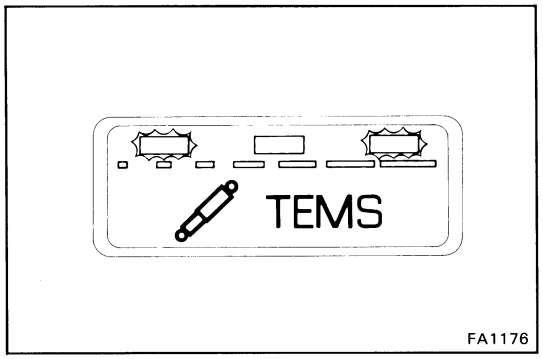

(d) Turn the ignition switch on, and check that the indicator lights S and F flash.

If not, there is a problem with either the mode select switch, service connector circuit or TEMS computer.

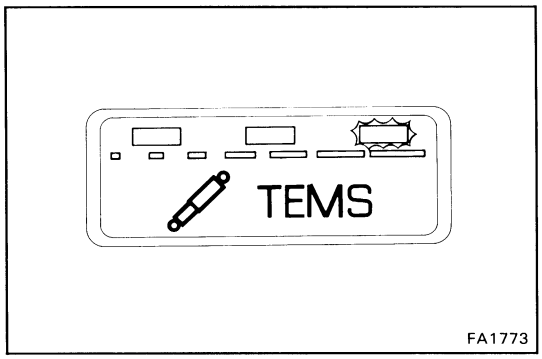

(e) Turn the steering wheel 1/10 — 1/8 turn to the right from a straightaway position and check that the F indicator flash and the S light goes out.

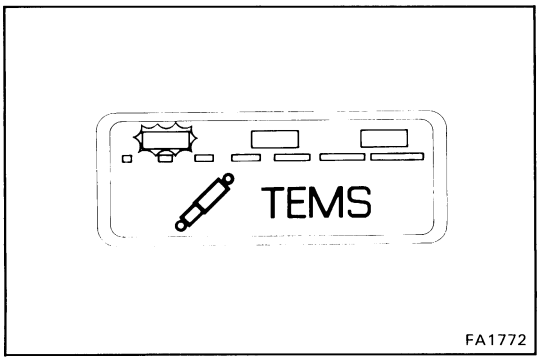

(f) Return the steering wheel to right from the straightaway position and then 1/10 — 1/8 turn to the left and check that the S indicator light flash and the F light goes out.

If operation is not as specified in (e) and (f) inspect for the cause.

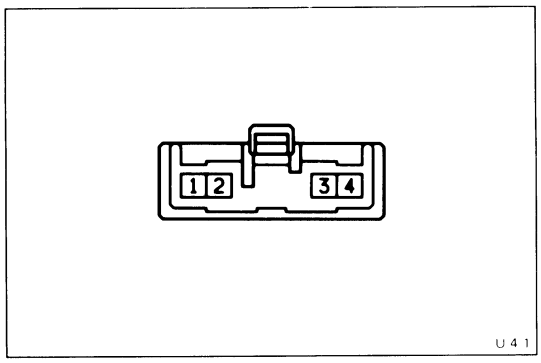

2. INSPECT STEERING SENSOR ASSEMBLY

(a) Turn the ignition switch on, and measure the voltage between steering sensor connector terminals 1 and 2.

Standard voltage: 3.5 — 4.2 volts

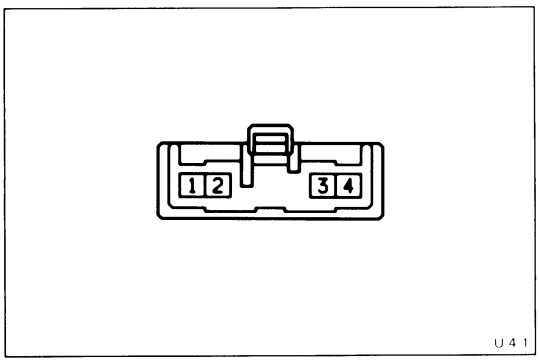

(b) Measure the voltage between steering sensor connector terminals 3, 4 and 2 wheel slowly turning the steering wheel.

Standard voltage: 5V — 0V — 5V — 0V

If not as shown above, either the circuit between the computer and steering sensor is shorted or the steering sensor is faulty.

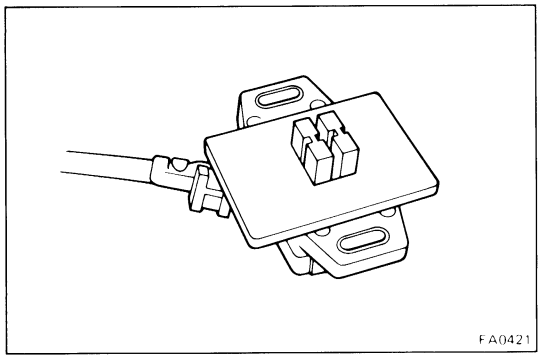

3. REMOVE STEERING SENSOR AND DISC
(See page SR-7)

4. INSPECT STEERING SENSOR AND DISC

(a) Check that there is no foreign matter in the groove of the sensor. If necessary, clean out the groove with a soft cloth.

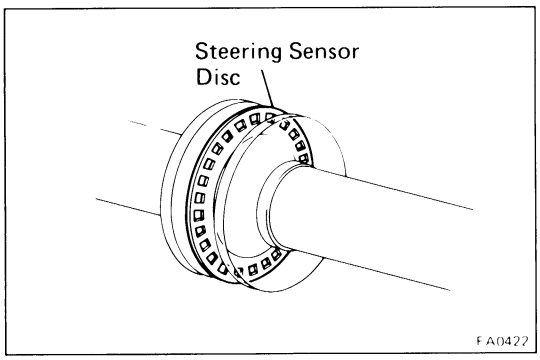

(b) Check that the sensor disc is not bent and that on dirt or foreign matter are adhering.

5. INSTALL STEERING SENSOR AND DISC
(See page SR-12)

Mode Select Switch

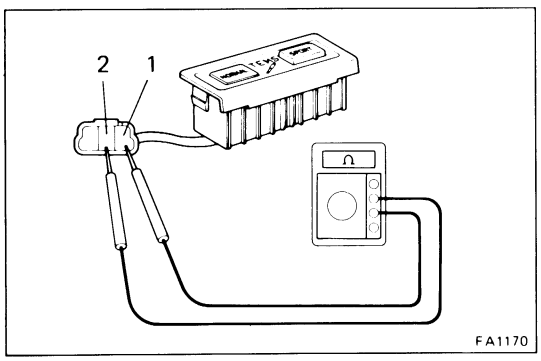

INSPECT SWITCH CONTINUITY

(a) Remove the mode select switch from the center console box.

(b) Disconnect the mode select switch connector.

(c) Check that there is continuity between terminals 1 and 2 when mode select switch is "Sport" position.

(d) Check that there is no continuity between terminals 1 and 2 when mode select switch is "Normal" position.

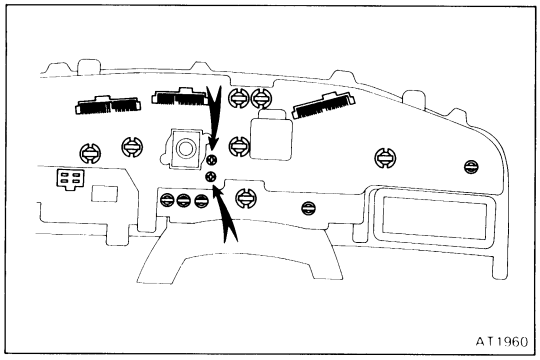

Speed Sensor

INSPECT SPEED SENSOR IN COMBINATION METER

(a) Remove the combination meter.

(b) Check that there is continuity between terminals SPD (+) and SPD (−) four times per each revolution of the shaft.

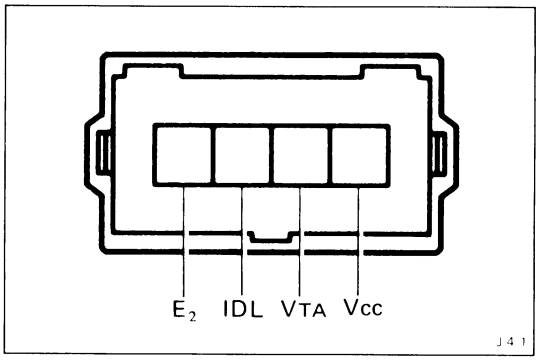

Throttle Position Sensor

INSPECT THROTTLE POSITION SENSOR

Using an ohmmeter, check the resistance between each terminals.

Terminal	Throttle valve condition	Resistance (kΩ)
IDL – E_2	Fully closed	0
	Open	Infinity
Vcc – E_2	–	3 – 7
VTA – E_2	Fully closed	0.2 – 0.8
	Fully open	3.3 – 10

Brake Light Switch

INSPECT BRAKE SIGNAL

Check that the brake light comes on when brake pedal is depressed.

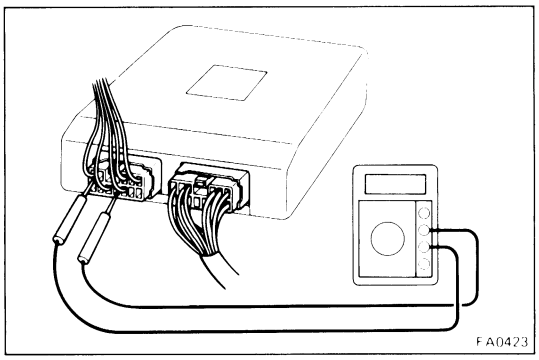

Computer and System Circuit

MEASURE VOLTAGE OR RESISTANCE OF SYSTEM

Using a volt/ohmmeter with high impedance (10 kΩ/ V minimum), measure the voltage or resistance at each terminal of the wiring connector.

NOTICE: To prevent damage to the computer, be careful of the volt/ohmmeter range and do not connect it in reverse.

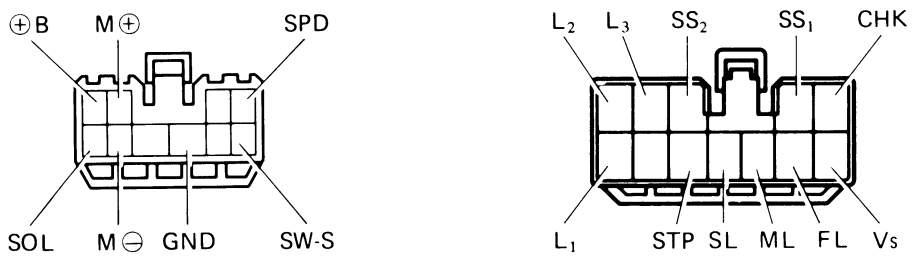

S 10 1 S 12 1

Terminal	Measuring condition		Voltage or Resistance
CHK – GND	Ignition Switch ON	Service Connector Terminals Ts – E_1 Open	12 V
		Service Connector Terminals Ts – E_1 Short	0 V
SS_1 SS_2 – GND	Ignition Switch ON and turn slowly steering wheel.		5 → 0 → 5 → 0 V
L_1 – GND	1. Ignition Switch ON 2. Depress the accelerator pedal.		5 → 0 V
L_2 – GND			5 → 0 → 5 V
L_3 – GND			5 → 0 → 5 → 0 V
Vs – GND	Ignition Switch ON		3.5 – 4.2 V
SL ML – GND FL	Ignition Switch ON		12 V (2 seconds)
STP – GND	Brake Pedal	Depress	12 V
		Not depress	0 V
SPD – GND	Engine running, vehicle moving		6 V
M⊕ – GND	Ignition Switch ON and Mode Select Switch at Normal → Sport (Motor operating)		Momentarily over 8 V
⊕B – GND	Ignition Switch ON		12 V
SW-S – GND	Ignition Switch ON and Mode Select Switch at Sport		Above 8 V
GND – Body earth	–		0 Ω
M⊖ – GND	Ignition Switch ON and Mode Select Switch at Sport → Normal (Motor operating)		Momentarily over 8 V
SOL – GND	Ignition Switch ON, Service Connector Terminals Ts – E_1 Short Circuit and Mode Select Switch at Sport		12 V

REAR AXLE AND SUSPENSION

	Page
TROUBLESHOOTING	RA-2
REAR WHEEL ALIGNMENT	RA-3
REAR AXLE HUB	RA-6
REAR DRIVE SHAFT	RA-16
DIFFERENTIAL	RA-23
Differential Case (Conventional 2 Pinion Type Differential)	RA-43
Differential Case (Conventional 4 Pinion Type Differential)	RA-46
Differential Case (Limited Slip Differential)	RA-49
REAR SUSPENSION	RA-56
Coil Spring and Shock Absorber	RA-57
No.1 and No.2 Lower Suspension Arms	RA-61
Upper Arm	RA-65
Strut Rod	RA-70
Stabilizer Bar	RA-71

TROUBLESHOOTING

Problem	Possible cause	Remedy	Page
Oil leak at pinion shaft	Oil level too high or wrong grade	Drain and replace oil	
	Oil seal worn or damaged	Replace oil seal	RA-23
	Companion flange loose or damaged	Tighten or replace flange	RA-23
Oil leak at side gear shaft	Oil level too high or wrong grade	Drain and replace oil	
	Oil seal worn or damaged	Replace oil seal	RA-26
	Side gear shaft damaged	Replace shaft	RA-26
Noises in rear axle	Oil level low or wrong grade	Drain and replace oil	
	Excessive backlash between pinion and ring or side gear	Check backlash	RA-28
	Ring gear worn or chipped	Inspect gear	RA-31
	Pinion or side gears worn or chipped	Inspect gears	RA-43, 46, 49
	Pinion shaft bearing worn	Replace bearing	RA-30
	Side bearing worn	Replace bearing	RA-31
	Differential bearing loose or worn	Tighten or replace bearings	RA-39
Bottoming	Vehicle overloaded	Check loading	
	Shock absorber worn out	Replace shock absorber	RA-56
	Springs weak	Replace spring	RA-56

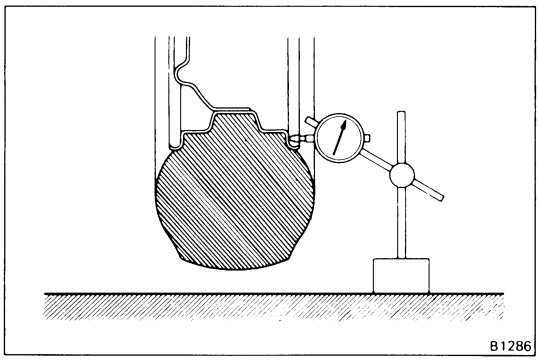

REAR WHEEL ALIGNMENT

1. **MAKE FOLLOWING CHECKS AND CORRECT ANY PROBLEMS**

   (a) Check the tires for wear, size and proper inflation. (See page FA-3)

   (b) Check the wheel runout.

   Lateral runout: Less than 1.2 mm (0.047 in.)

   (c) Check the rear suspension for looseness.

   (d) Check that the rear shock absorber and coil spring function properly by using the standard bounce test.

2. **MEASURE VEHICLE HEIGHT (See page FA-3)**

   If the height of the vehicle is not at standard, try to level the vehicle by shaking it down. If still not correct, check for bad springs and worn or loose suspension parts.

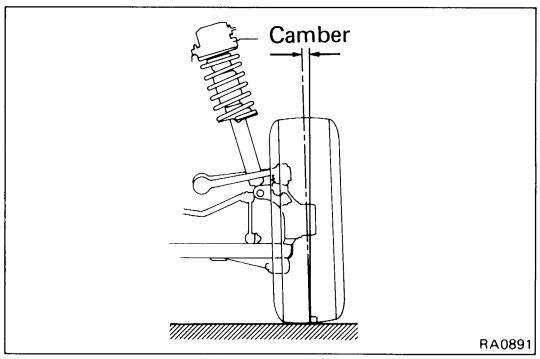

3. **INSPECT CAMBER**

   Inspect right and left side camber.

   Inspection STD: −45′ ± 45′

   Left-right error: 30′

   If not within specification, inspect any damaged or worn rear suspension parts and replace if necessary.

   HINT: Since adjustment of camber and toe-in are done together, adjust both after measuring the toe-in.

4. **INSPECT TOE-IN (See page FA-6)**

   Toe-in:

   Inspetion STD 4 ± 2 mm (0.16 ± 0.08 in.)

   If toe-in not within specification, adjust by the cam.

5. ADJUST CAMBER AND TOE-IN

(a) Measure the length of the No.1 and No.2 lower suspension arms as shown in the illustration. Check that the lengths of right side and left side lengths are equal.

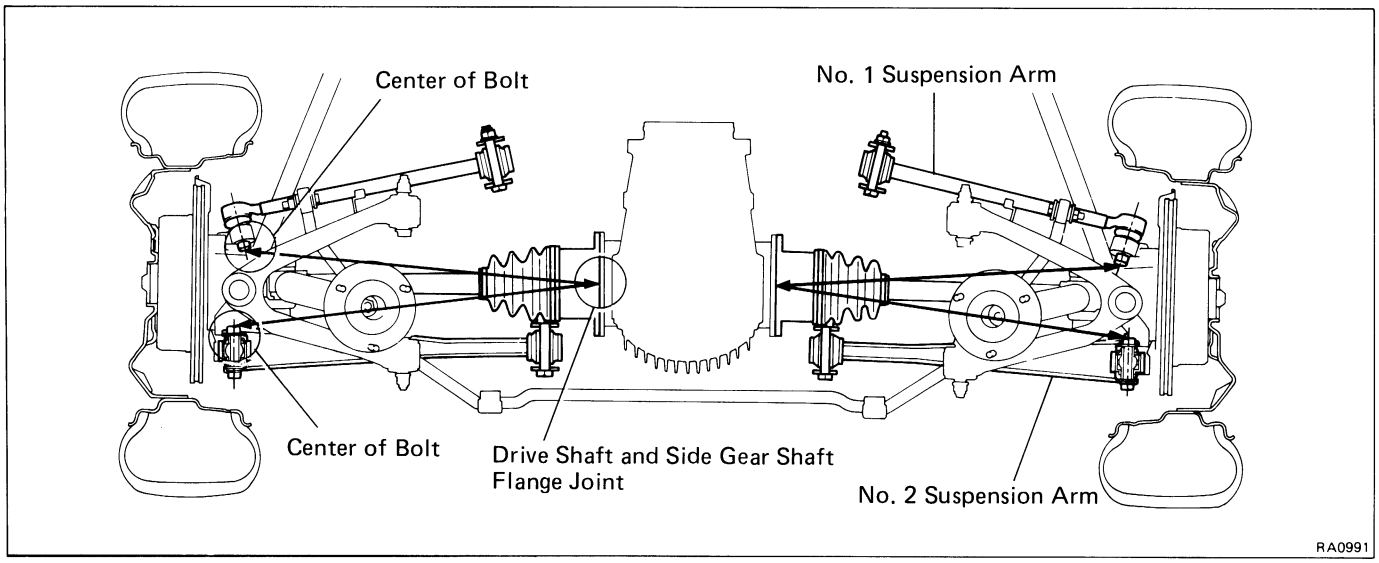

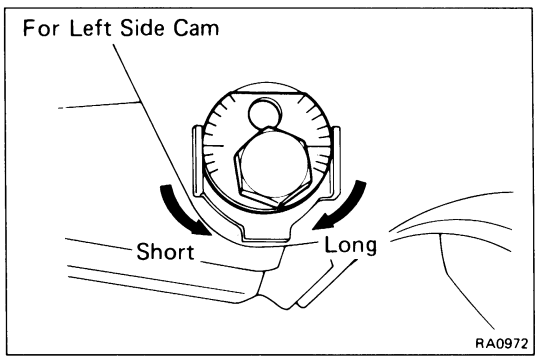

If not, by turning the adjusting cam, adjust the length of the arm until the left and right side lengths are equal.

(b) Measure the camber and toe-in.

If camber and toe-in is still not within specification, adjust the camber and toe-in with adjusting cam.

Toe-in:

Adjustment STD 4 ± 1 mm (0.16 ± 0.04 in.)

Camber:

Adjustment STD −45′ ± 30′
Left-right error 30′

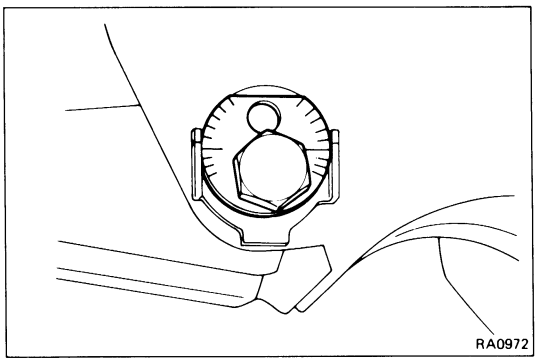

ADJUSTMENT CHART

How to read this chart

Mark the camber and toe-in measurements on the chart and then trace the lines to where they intersect. From that point, as shown in the example below, read the numbers from the graduation for the amounts to turn the front and rear cams.

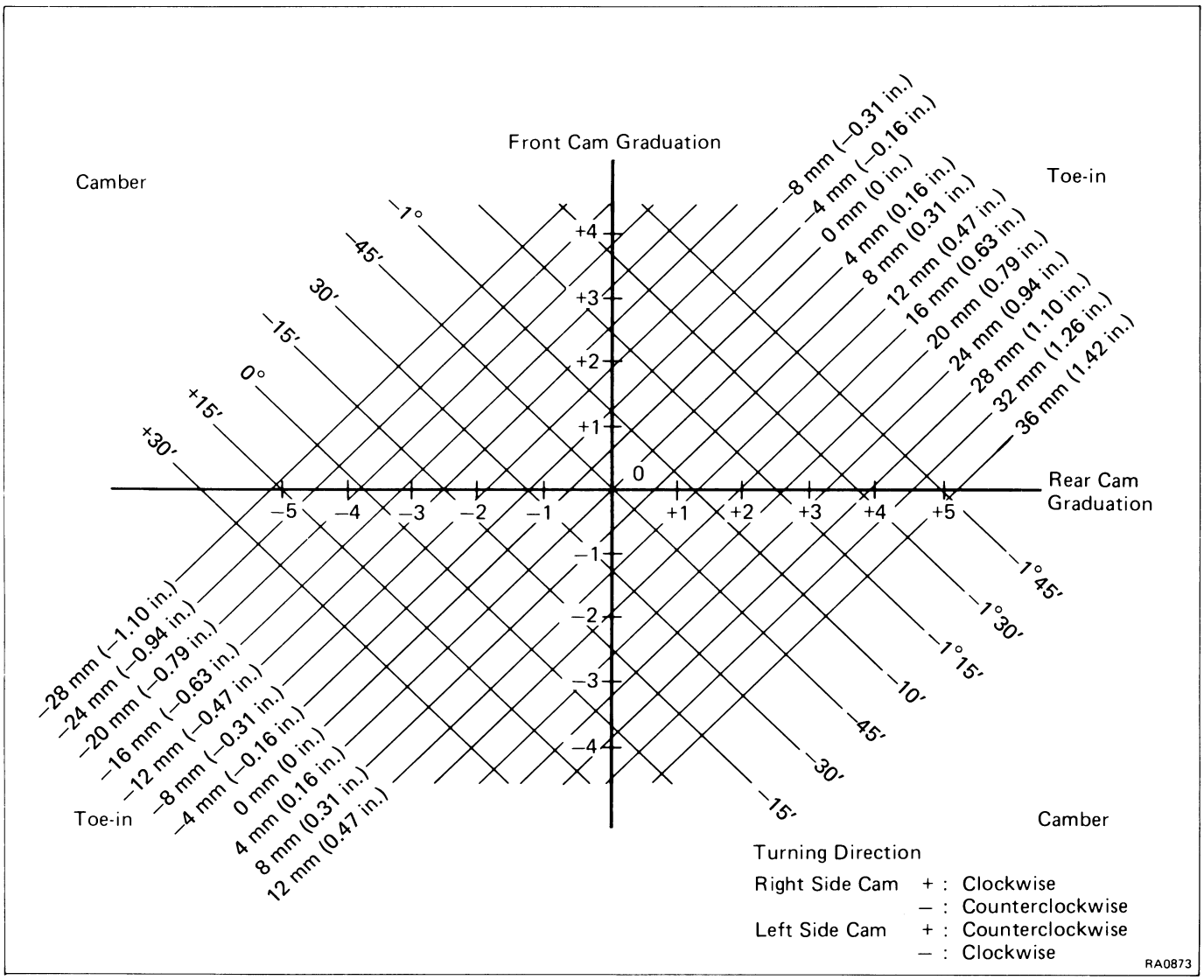

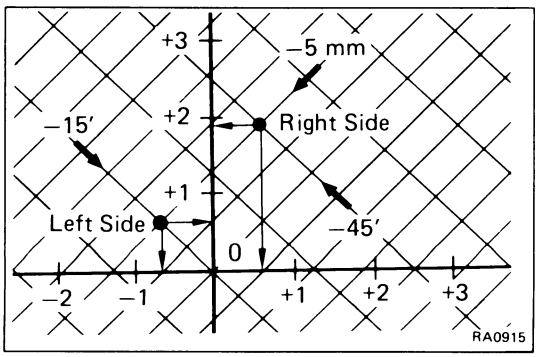

Example

Measurements:

Toe-in		**−4 mm (−0.16 in.)**
Camber	**(Right side)**	**−1°15′**
	(Left side)	**−45′**

Amount to turn adjusting cam (by graduation):

Right side	**(Front cam)**	**+1.9 (clockwise)**
	(Rear cam)	**+0.6 (clockwise)**
Left side	**(Front cam)**	**+0.7 (counterclockwise)**
	(Rear cam)	**−0.7 (clockwise)**

REAR AXLE HUB

COMPONENT

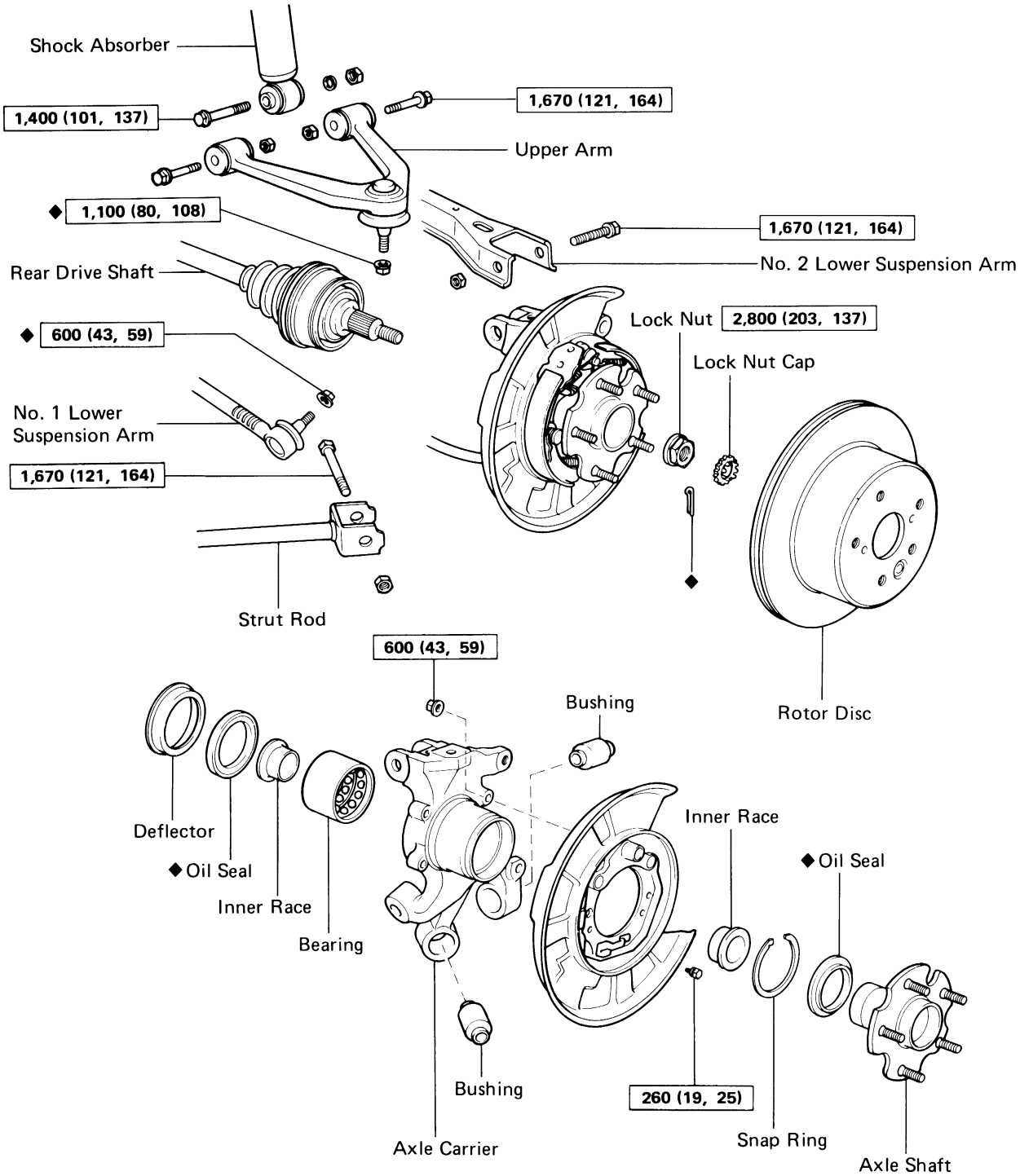

kg-cm (ft-lb, N·m) : Specified torque

◆ Non-reusable part

RA0916

REMOVAL OF REAR AXLE HUB

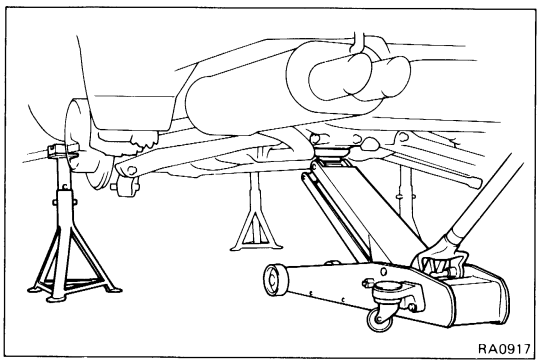

1. **JACK UP AND SUPPORT VEHICLE AND REMOVE WHEEL**

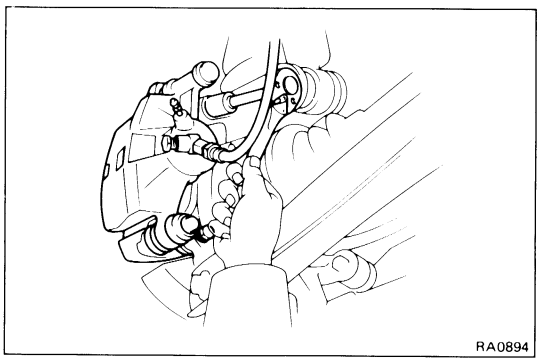

2. **REMOVE BRAKE CALIPER**

   Remove the brake caliper from the axle carrier and suspend it with wire.

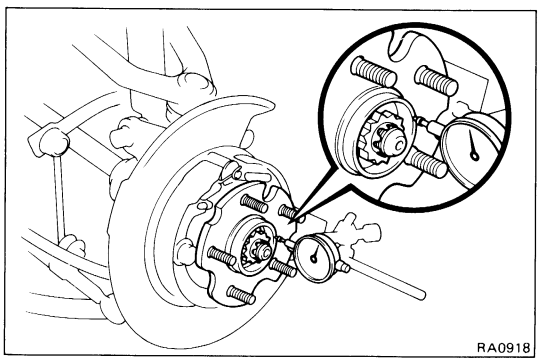

3. **REMOVE ROTOR DISC**
   (See page BR-39)

4. **CHECK BEARING PLAY IN AXIAL DIRECTION**

   Limit: 0.05 mm (0.0020 in.)

   If not within specification, disassemble and inspect axle hub.

5. **CHECK AXLE SHAFT FLANGE RUNOUT**

   Limit: 0.05 mm (0.0020 in.)

   If not within specification, replace the axle shaft.

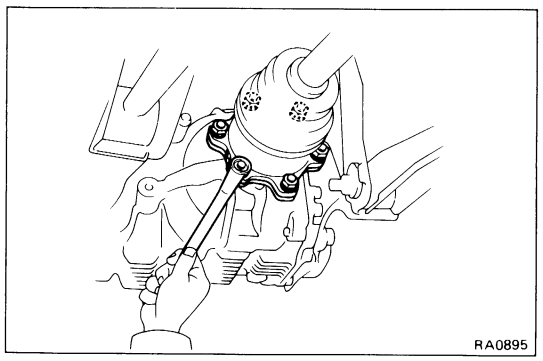

6. **REMOVE REAR DRIVE SHAFT**
   (See page RA-16)

7. **REMOVE PARKING BRAKE ASSEMBLY**
   (See page BR-39)

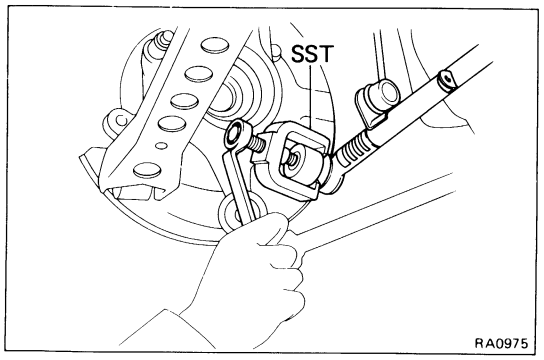

8. **DISCONNECT NO.1 LOWER SUSPENSION ARM FROM AXLE CARRIER**

   (a) Remove the nut from axle carrier.

   (b) Using SST, disconnect the No.1 lower suspension arm from the axle carrier.

   SST 09611-22012

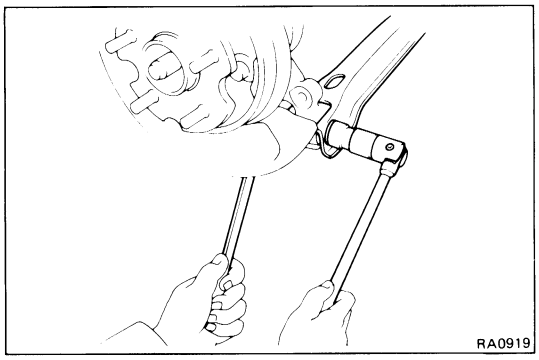

9. DISCONNECT NO.2 LOWER SUSPENSION ARM FROM AXLE CARRIER

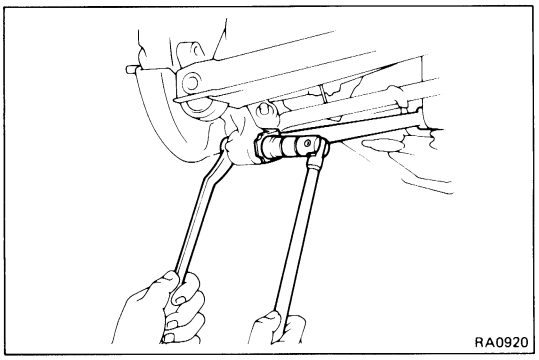

10. DISCONNECT STRUT ROD FROM AXLE CARRIER

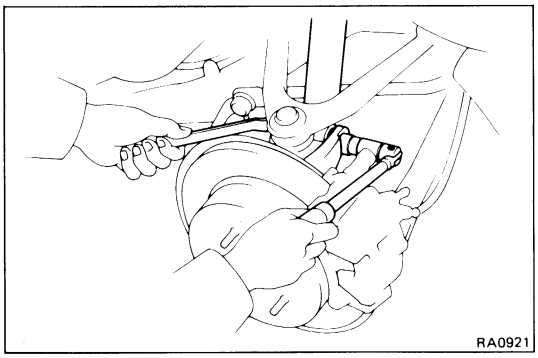

11. DISCONNECT SHOCK ABSORBER FROM AXLE CARRIER

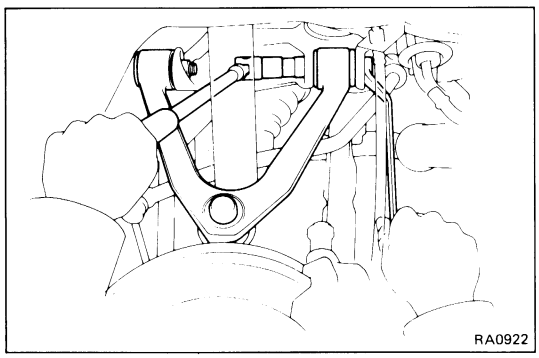

12. DISCONNECT UPPER ARM FROM BODY AND REMOVE AXLE HUB ASSEMBLY

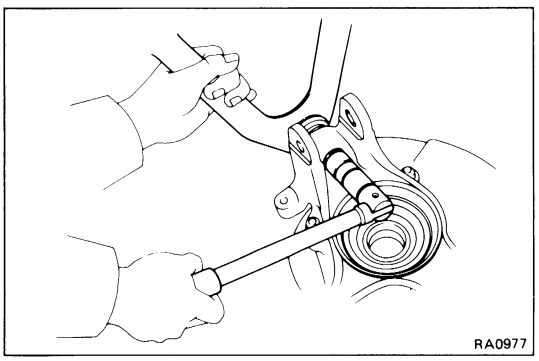

13. REMOVE UPPER ARM FROM AXLE CARRIER

(a) Remove the upper arm mounting nut.

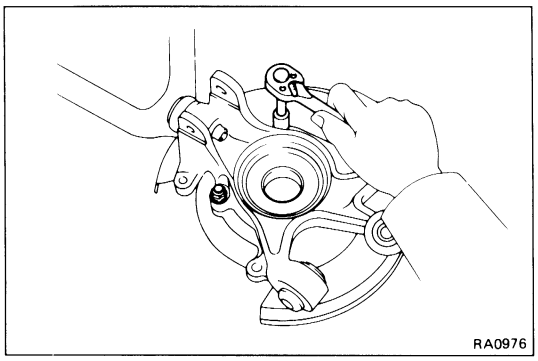

(b) Separate the backing plate and axle carrier.

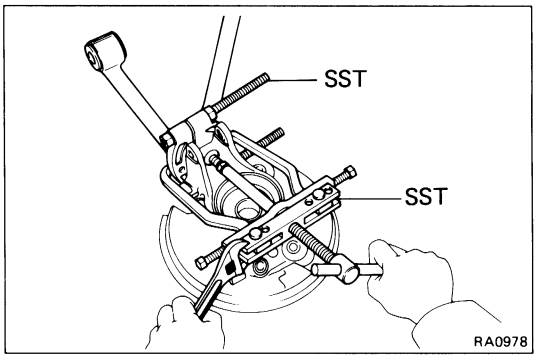

(c) Using SST, remove the upper arm from the axle carrier.

SST 09950-00020, 09950-20017

DISASSEMBLY OF REAR AXLE HUB

(See page RA-6)

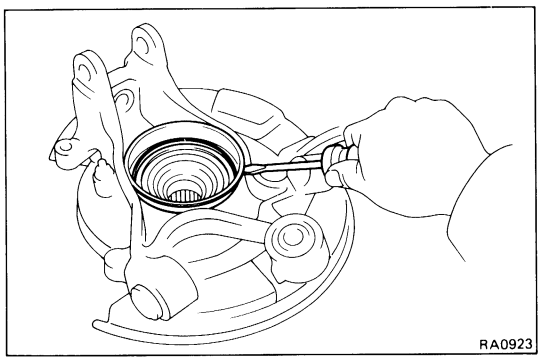

1. REMOVE DUST DEFLECTOR

Using a screwdriver, remove the deflector from the axle caliper.

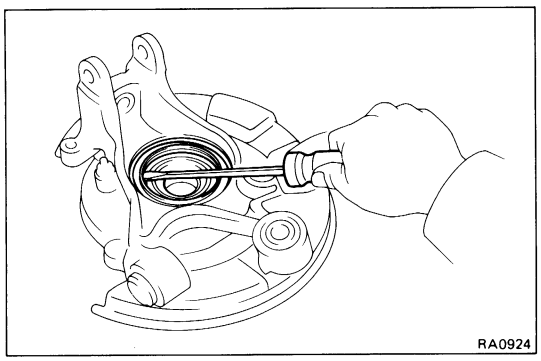

2. REMOVE INNER OIL SEAL

Using a screwdriver, remove the inner oil seal.

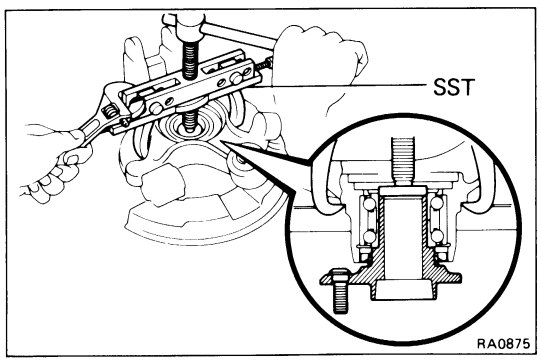

3. REMOVE AXLE SHAFT FROM AXLE CARRIER

(a) Using SST, remove the axle shaft from the axle carrier.

SST 09950-20017

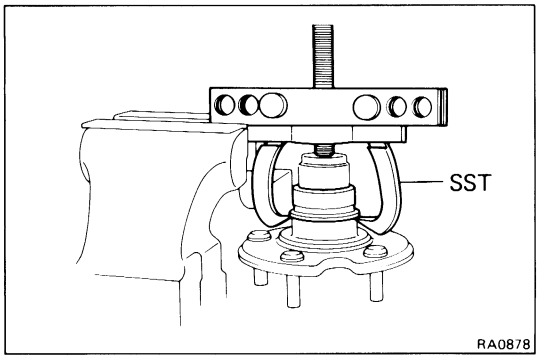

(b) Using SST, remove the bearing inner race (outside) from the axle hub.

SST 09950-20017

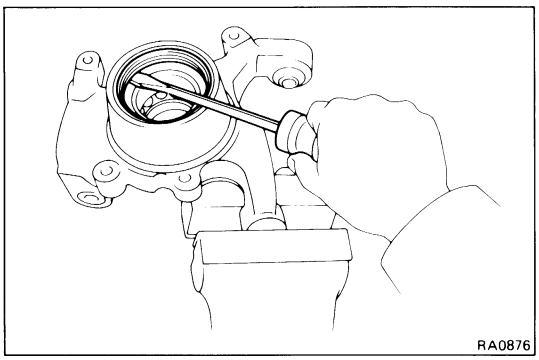

4. REMOVE OUTER OIL SEAL

Using a screwdriver, remove the oil seal from the axle carrier.

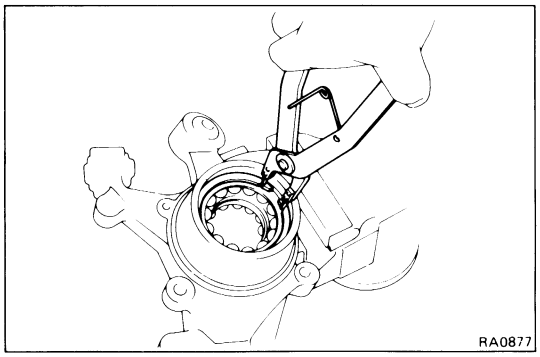

5. REMOVE BEARING

(a) Using snap ring pliers, remove the snap ring.

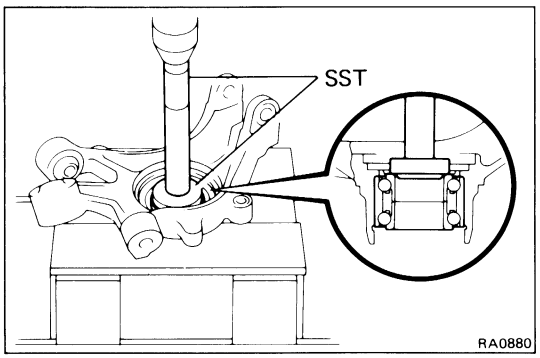

(b) Using SST, press out the bearing outer race from the axle carrier.

SST 09608-35014 (09608-06020, 09608-06100)

NOTICE: Always replace the bearing as an assembly.

(c) Remove the bearing inner race (inside) and two bearings from the bearing outer race.

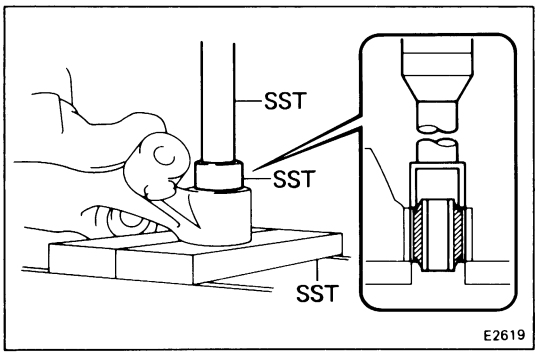

6. IF NECESSARY, REPLACE LOWER CONTROL ARM BUSHING

(a) Using SST, press out the lower control arm bushing.

SST 09527-20011
09710-14012 (09710-00030, 09710-00050)

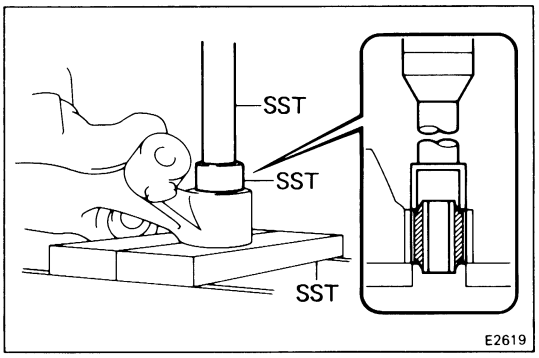

(b) Using SST, press in a new lower control arm bushing.

SST 09527-20011
09710-14012 (09710-00030, 09710-00050)

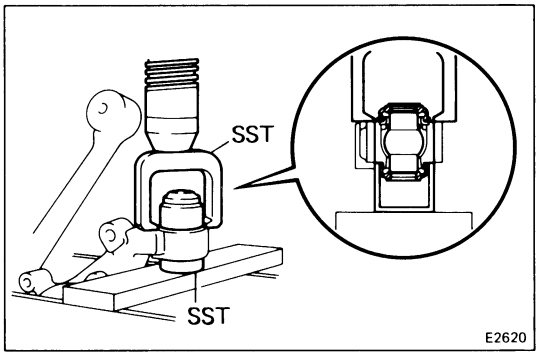

7. IF NECESSARY, REPLACE LOWER BALL BUSHING

(a) Using SST, press out the lower ball bushing.

SST 09710-30020 (09710-03040, 09710-03070)

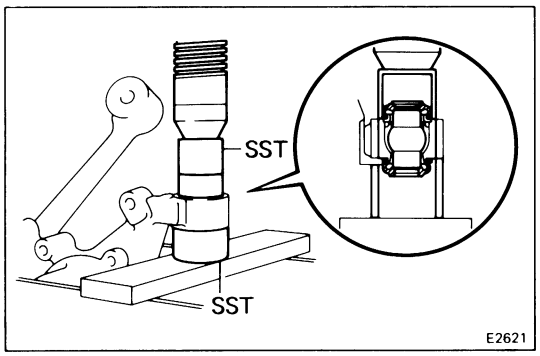

(b) Using SST, press in a new lower ball bushing.

SST 09710-30020 (09710-03070, 09710-03100)

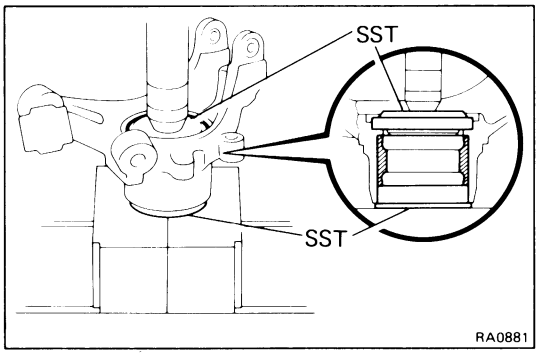

ASSEMBLY OF REAR AXLE HUB

(See page RA-6)

1. INSTALL BEARING

(a) Using SST, press in a new bearing outer race to the axle carrier.

SST 09608-32010, 09608-35014 (09608-06180)

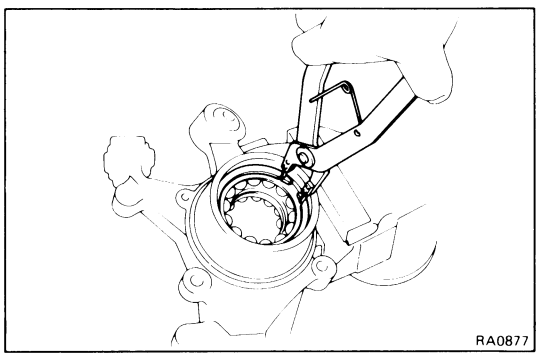

(b) Install a new bearing into the bearing outer race.

(c) Using snap ring pliers, install the snap ring.

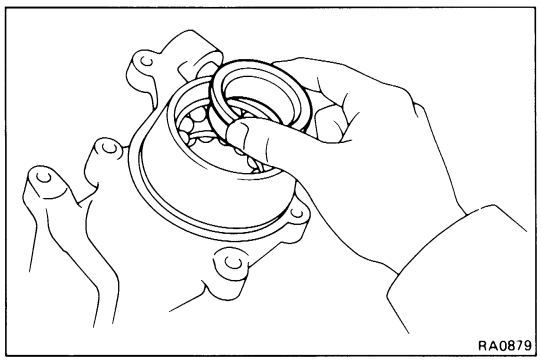

(d) Coat the bearings and hub inside with MP grease.

(e) Install two new bearing inner races.

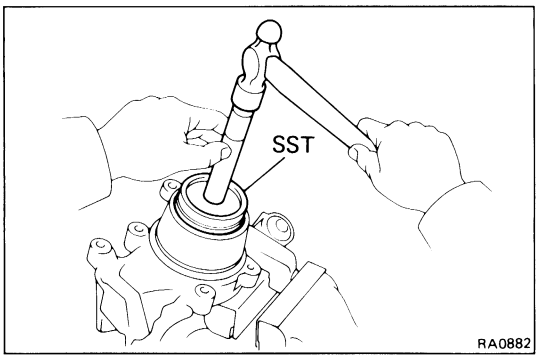

2. INSTALL OUTER OIL SEAL

(a) Using SST, drive in a new oil seal to the axle carrier.

SST 09608-32010

(b) Apply MP grease between the oil seal lip and oil seal.

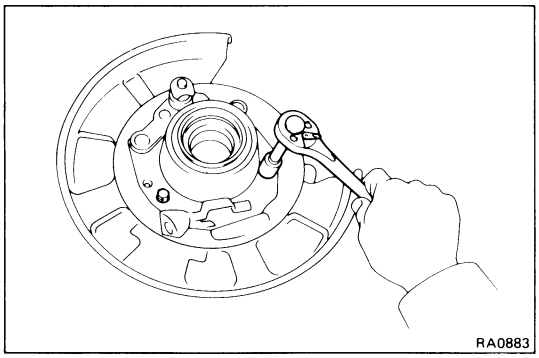

3. INSTALL BACKING PLATE TO AXLE CARRIER

Torque: Nut 600 kg-cm (43 ft-lb, 59 N·m)
Bolt 260 kg-cm (19 ft-lb, 25 N·m)

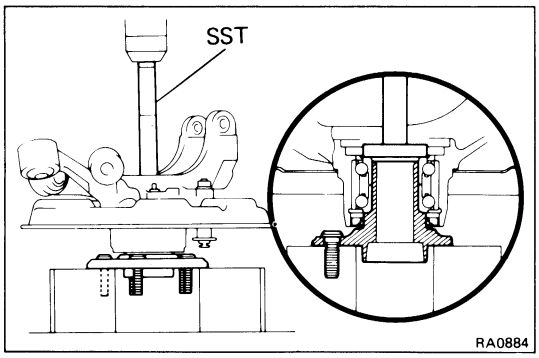

4. INSTALL AXLE SHAFT

Using SST, install the axle shaft to the axle carrier.

SST 09608-35014 (09608-06020, 09608-06180)

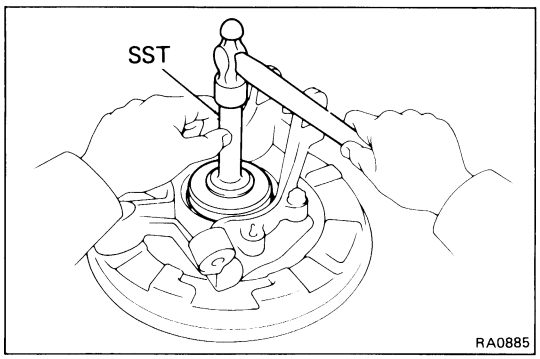

5. INSTALL INNER OIL SEAL

(a) Using SST, drive in a new oil seal to the axle carrier.

SST 09223-15010

(b) Apply MP grease between the oil seal lip, oil seal and bearing.

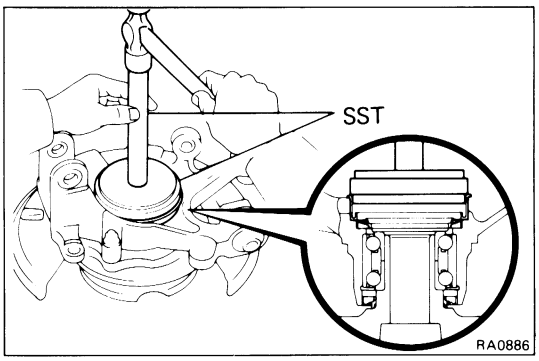

6. INSTALL DUST DEFLECTOR

Using SST, drive in a new dust deflector into the axle carrier.

SST 09218-56020, 09608-35014 (09608-06020)

INSTALLATION OF REAR AXLE HUB

(See page RA-6)

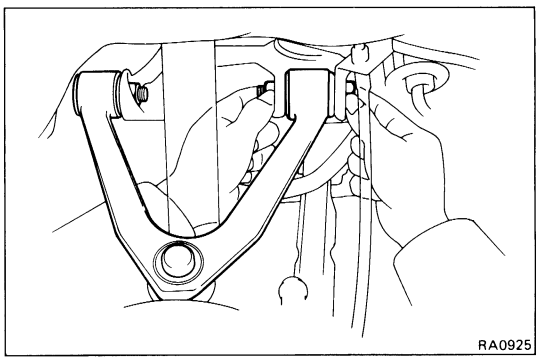

1. TEMPORARILY CONNECT UPPER ARM TO BODY

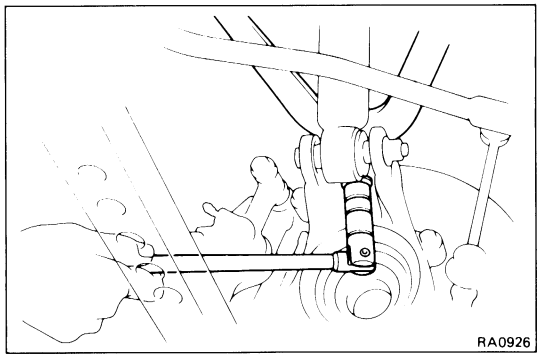

2. TEMPORARILY CONNECT AXLE HUB ASSEMBLY TO UPPER ARM

Temporarily install a new nut.

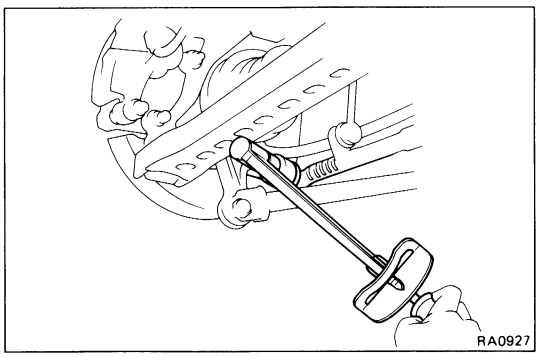

3. CONNECT NO.1 LOWER SUSPENSION ARM

Torque: 600 kg-cm (43 ft-lb, 59 N·m)

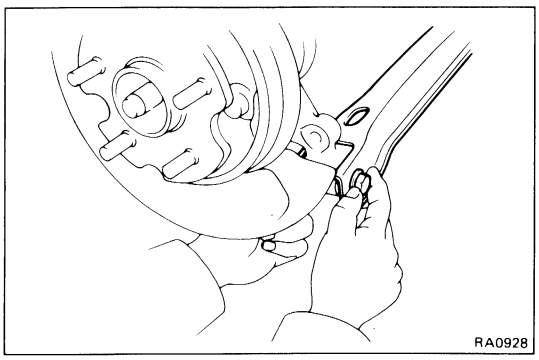

4. TEMPORARILY CONNECT NO.2 LOWER SUSPENSION ARM

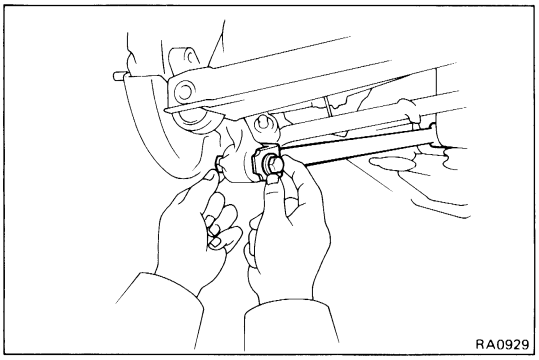

5. **TEMPORARILY CONNECT STRUT ROD**

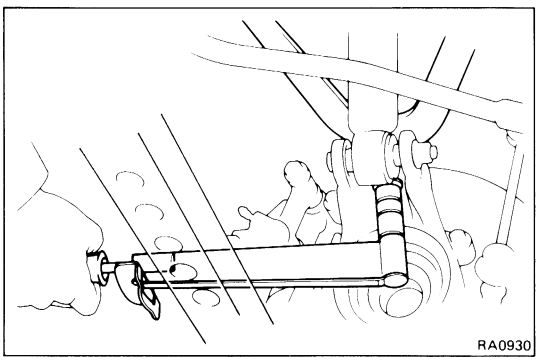

6. **TORQUE UPPER ARM MOUNTING NUT**

   Torque: 1,100 kg-cm (80 ft-lb, 108 N·m)

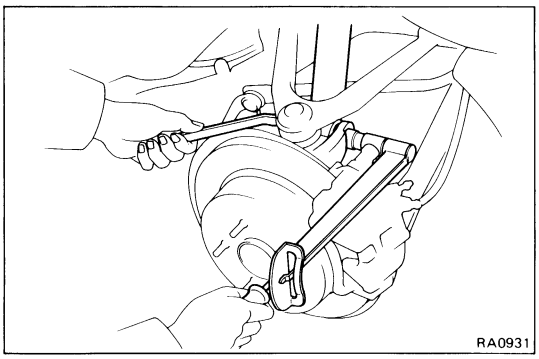

7. **CONNECT SHOCK ABSORBER**

   Torque: 1,400 kg-cm (101 ft-lb, 137 N·m)

8. **INSTALL PARKING BRAKE ASSEMBLY**
   (See page BR-43)

9. **INSTALL ROTOR DISC**
   (See page BR-45)

10. **INSTALL REAR DRIVE SHAFT**
    (See page RA-21)

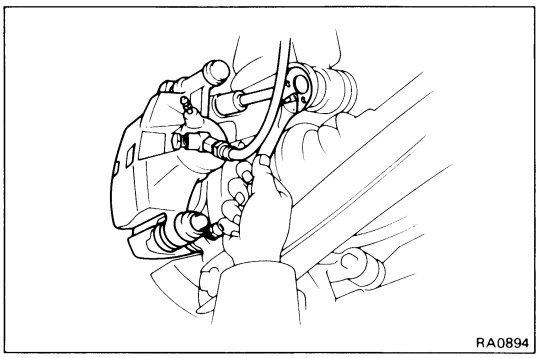

11. **INSTALL BRAKE CALIPER**

    Torque: 475 kg-cm (34 ft-lb, 47 N·m)

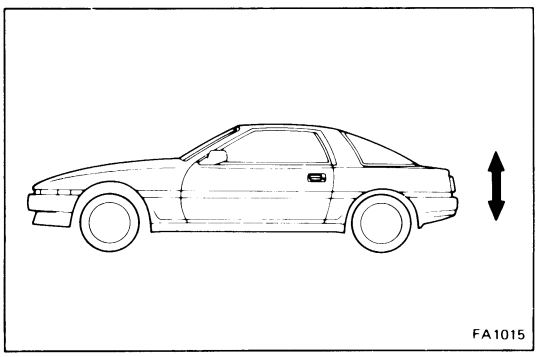

12. **TORQUE SUSPENSION PARTS**

    (a) Install the wheel and lower the vehicle.

    (b) Bounce the vehicle up and down to stabilize the suspension.

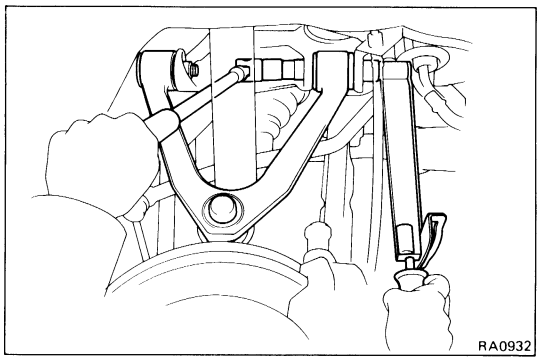

(c) Torque the suspension mounting bolts and nuts with the vehicle weight on the suspension.

Torque:
Upper arm × body
1,670 kg-cm (121 ft-lb, 164 N·m)

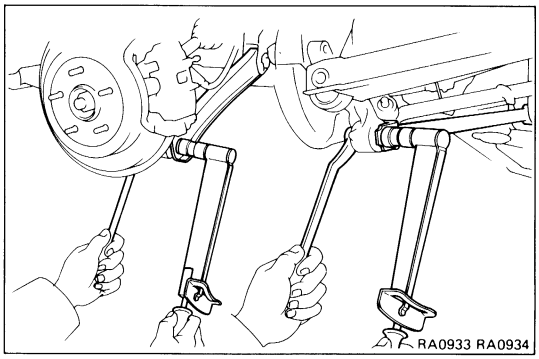

No.2 lower suspension arm × axle carrier
1,670 kg-cm (121 ft-lb, 164 N·m)
Strut rod × axle carrier
1,670 kg-cm (121 ft-lb, 164 N·m)

REPLACEMENT OF REAR AXLE HUB BOLT

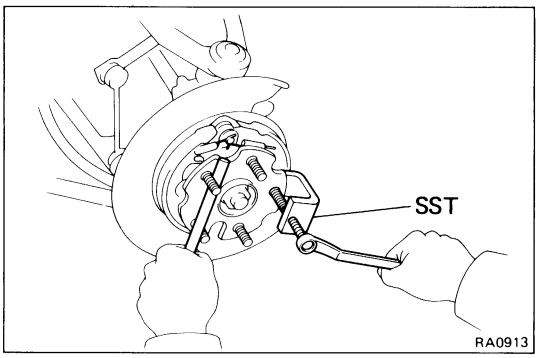

1. **JACK UP AND SUPPORT VEHICLE**
2. **REMOVE WHEEL, BRAKE CALIPER AND ROTOR DISC**
3. **REMOVE HUB BOLT**
   Using SST, remove the hub bolt.
   SST 09650-17011

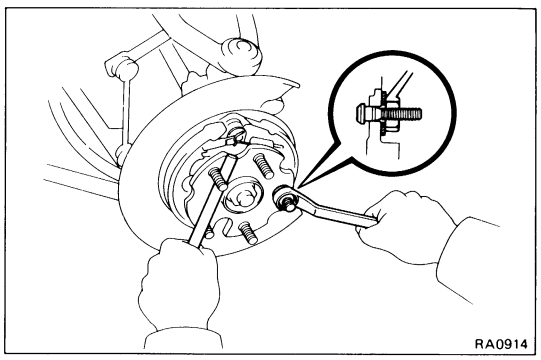

4. **INSTALL HUB BOLT**
   Using a washer and nut(10 mm), install the new hub bolt.
5. **INSTALL ROTOR DISC AND BRAKE CALIPER**
   Torque: 475 kg-cm (34 ft-lb, 47 N·m)
6. **INSTALL WHEEL**

REAR DRIVE SHAFT

COMPONENTS

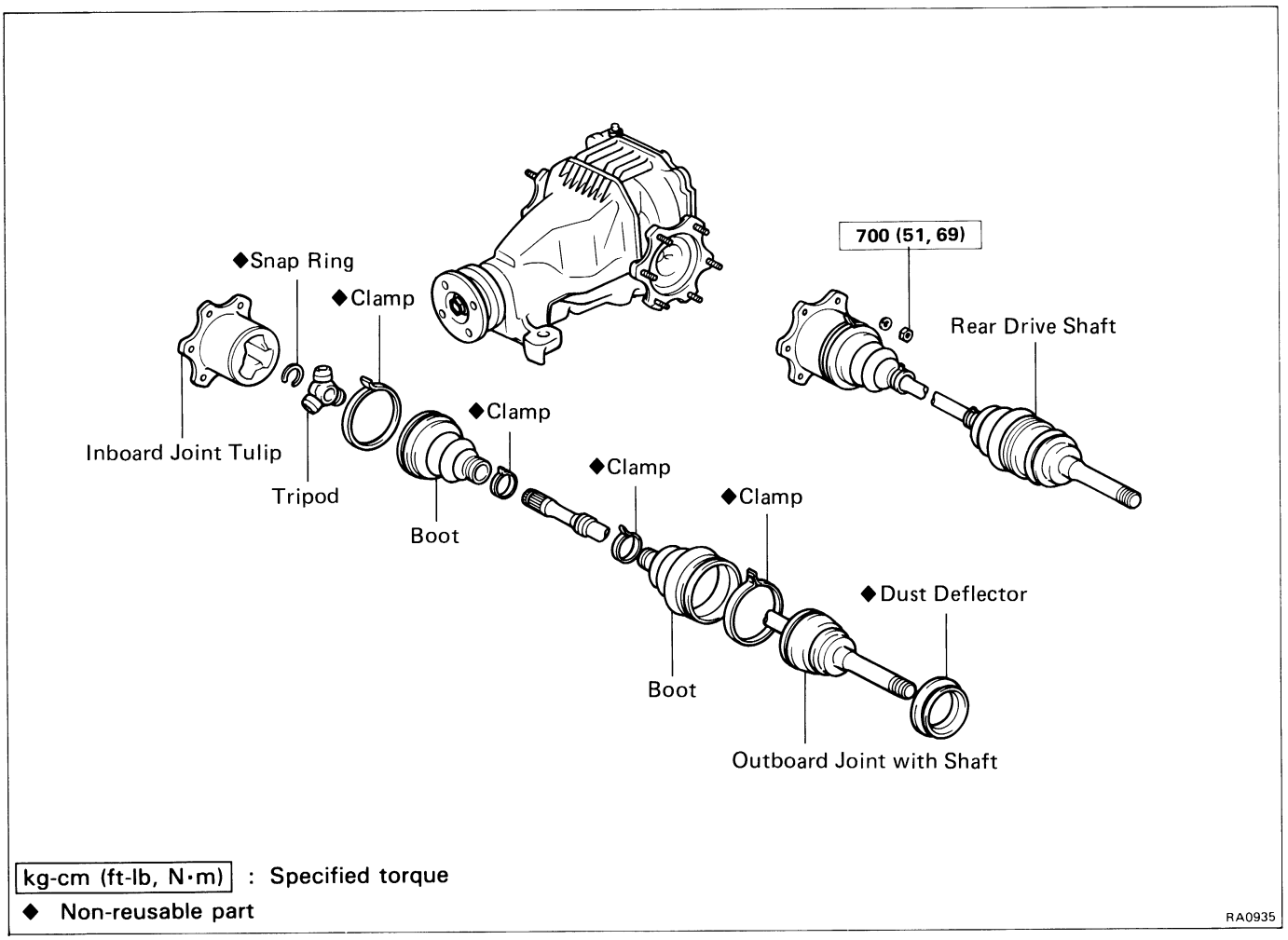

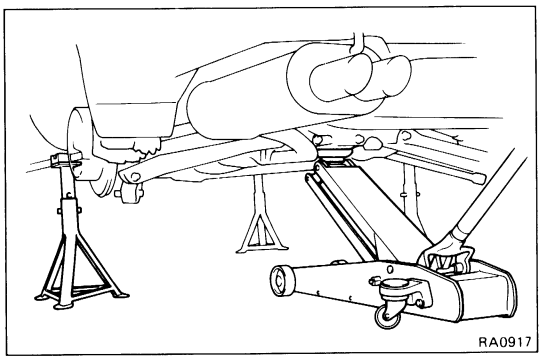

REMOVAL OF REAR DRIVE SHAFT

1. **JACK UP AND SUPPORT VEHICLE**
2. **REMOVE WHEEL**

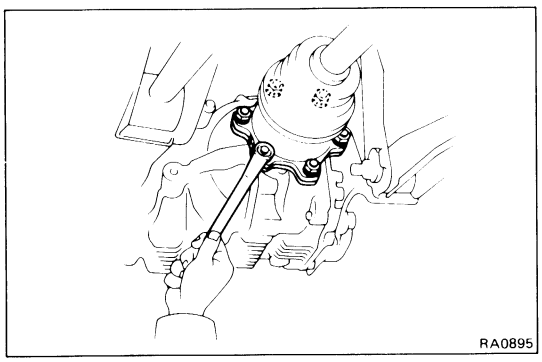

3. **DISCONNECT REAR DRIVE SHAFT FROM DIFFERENTIAL**
   (a) Using a jack, raise the No. 2 suspension arm until it is horizontal.
   (b) Place the matchmarks to the rear drive shaft and side gear shaft flange.
   (c) Remove the six nuts, while depressing the brake pedal.

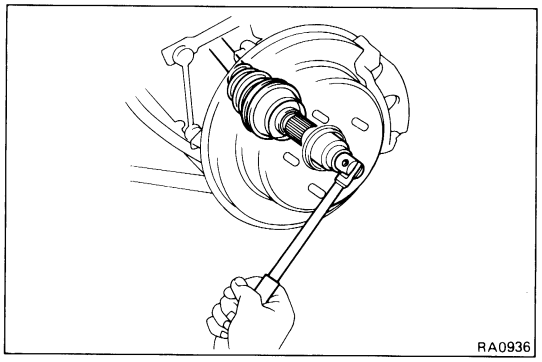

4. REMOVE COTTER PIN, LOCK NUT CAP AND LOCK NUT

(a) Remove the cotter pin and lock nut cap.

(b) Loosen the bearing lock nut while depressing the brake pedal.

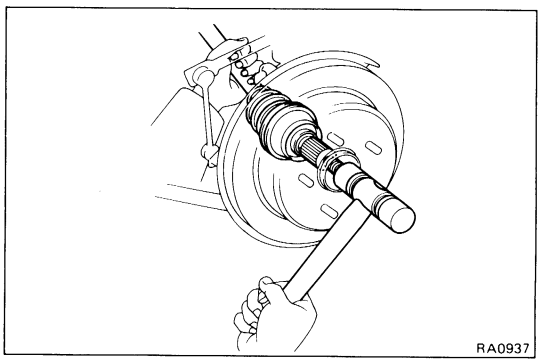

5. REMOVE REAR DRIVE SHAFT

Using a plastic hammer, remove the rear drive shaft.

DISASSEMBLY OF REAR DRIVE SHAFT

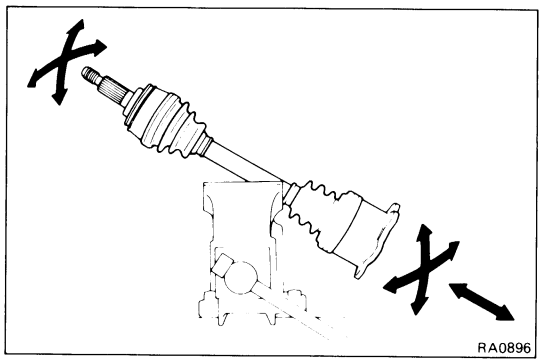

1. CHECK REAR DRIVE SHAFT

(a) Check to see there is no play in the inboard and outboard joints.

(b) Check to see that the inboard joint slides smoothly in the thrust direction.

(c) Check to see that there is no noticeable play in the radial direction of the universal joints.

(d) Check the damage of the boot.

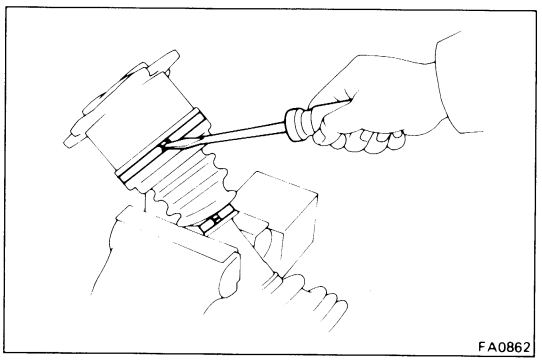

2. REMOVE INBOARD JOINT BOOT CLAMPS

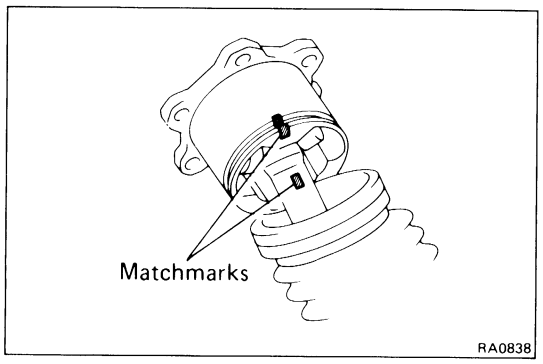

3. DISASSEMBLE INBOARD JOINT TULIP

(a) Place matchmarks on the inboard joint tulip and tripod.

NOTICE: Do not punch the marks.

(b) Remove the inboard joint tulip from the rear drive shaft.

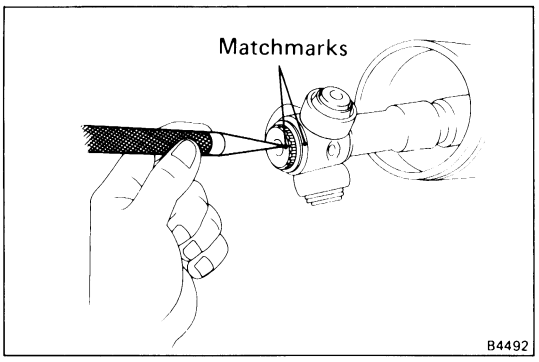

4. DISASSEMBLE TRIPOD JOINT

(a) Using snap ring pliers, remove the snap ring.

(b) Using a punch and hammer, place matchmarks on the shaft and tripod.

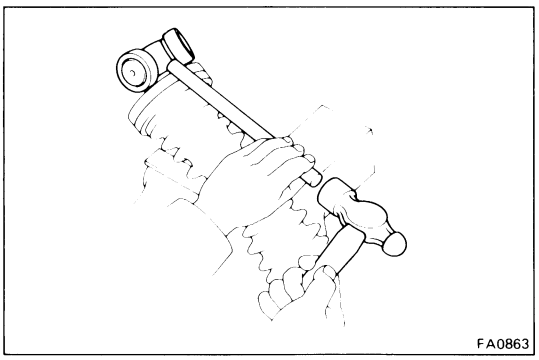

(c) Using a brass bar and hammer, remove the tripod joint from the drive shaft.

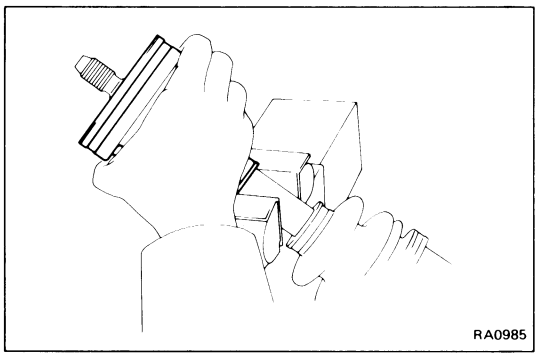

5. REMOVE INBOARD JOINT BOOT

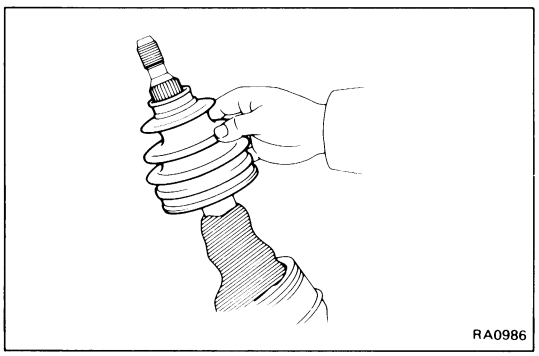

6. REMOVE OUTBOARD JOINT BOOT CLAMPS AND BOOT

NOTICE: Do not disassemble the outboard joint.

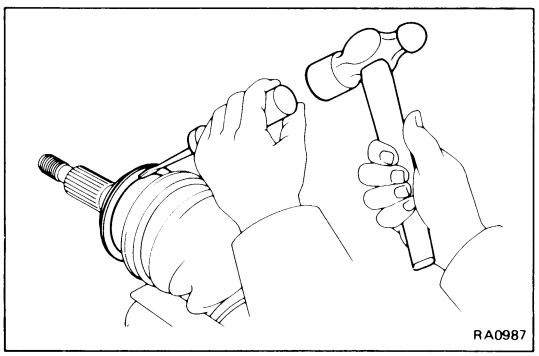

7. REMOVE DUST DEFLECTOR

Using a screwdriver and hammer, remove the dust deflector.

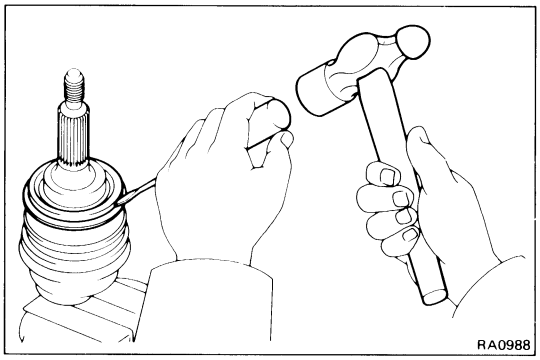

ASSEMBLY OF REAR DRIVE SHAFT

1. INSTALL DUST DEFLECTOR

Using a hammer and screwdriver, install a new dust deflector.

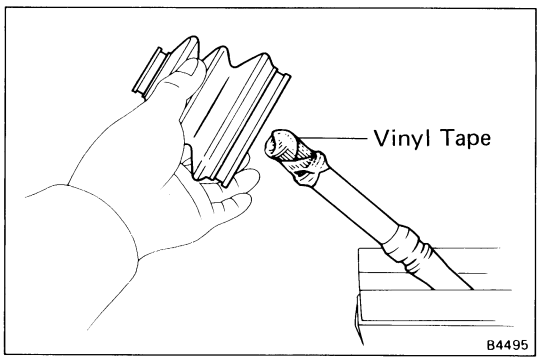

2. TEMPORARILY INSTALL BOOT AND NEW CLAMPS TO OUTBOARD JOINT

HINT: Before installing the boot, wrap vinyl tape around the spline of the to prevent damage the boot.

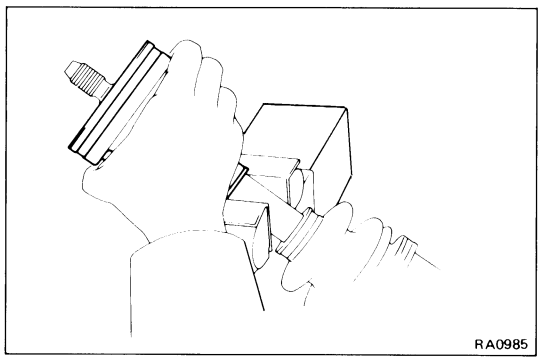

3. TEMPORARILY INSTALL BOOT AND NEW CLAMPS FOR INBOARD JOINT TO REAR DRIVE SHAFT

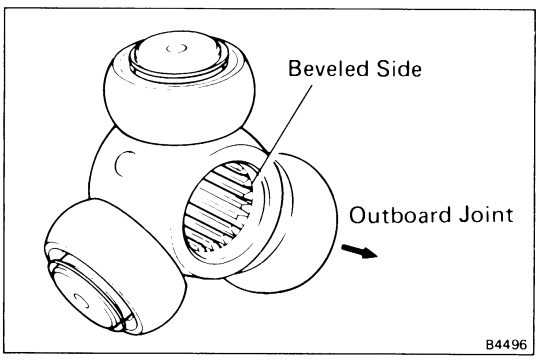

4. ASSEMBLE TRIPOD JOINT

(a) Place the beveled side of the tripod axial spline toward the outboard joint.

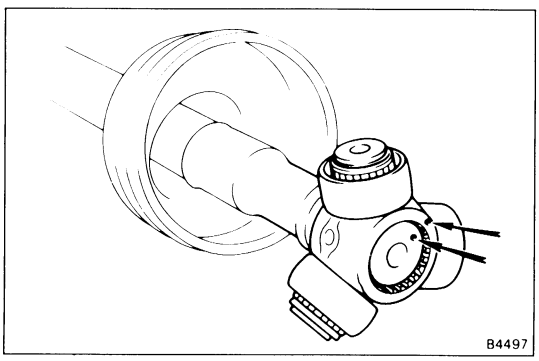

(b) Align the matchmarks placed before disassmbly.

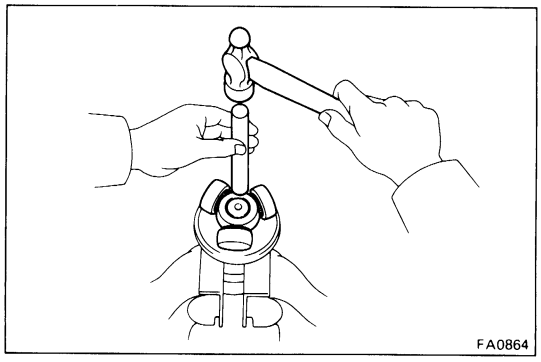

(c) Using a brass bar and hammer, tap in the tripod joint to the rear drive shaft.

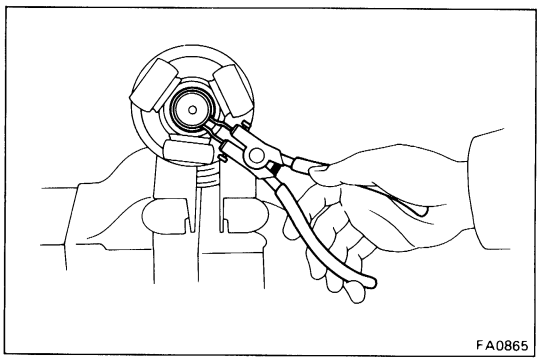

(d) Using snap ring pliers, install the snap ring.

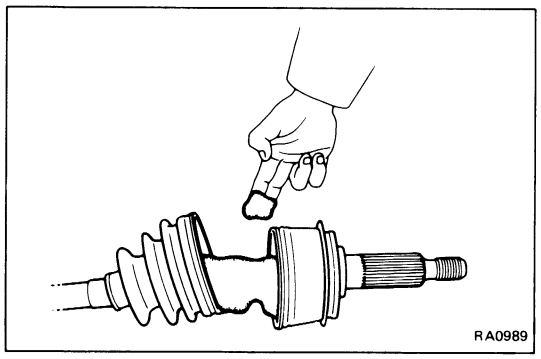

5. ASSEMBLE BOOT TO OUTBOARD JOINT

Before assembling the boot, an adequate amount of grease.

HINT: Use the grease supplied in the boot kit.

Grease capacity: 155 – 165 g (0.34 – 0.36 lb)

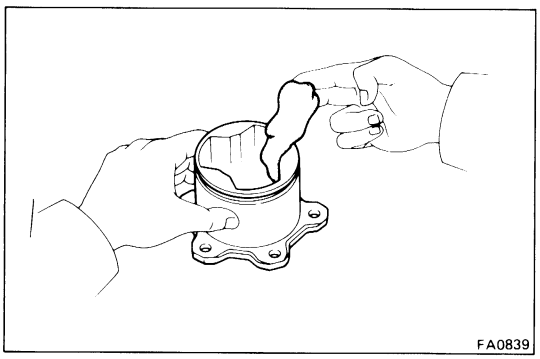

6. ASSEMBLE INBOARD JOINT TULIP

(a) Pack in grease to the inboard tulip and boot.

HINT: Use the grease supplied in the boot kit.

Grease capacity: 270 – 280 g (0.60 – 0.62 lb)

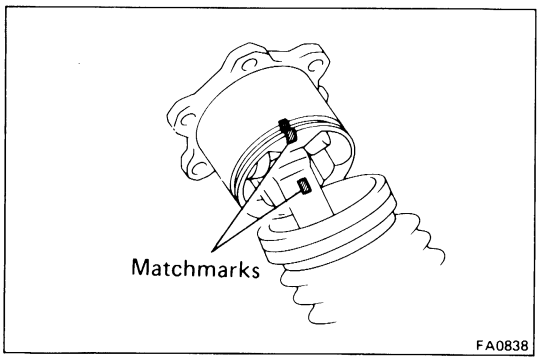

(b) Align the matchmarks placed before disassembly.

(c) Install the boot to the inboard tulip.

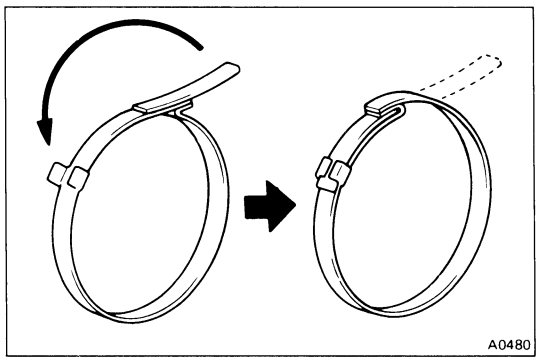

7. **ASSEMBLE BOOT CLAMPS TO BOTH BOOTS**
   (a) Be sure the boot is on the shaft groove.
   (b) Bend the band and lock it as shown in the figure.

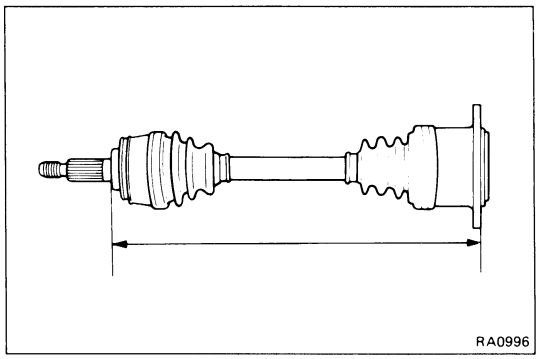

   (c) Insure that the boot is not stretched or contracted when the drive shaft is at standard length.

   Standard length:
   551.8 — 554.8 mm (21.724 — 21.842 in.)

INSTALLATION OF REAR DRIVE SHAFT

(See page RA-16)

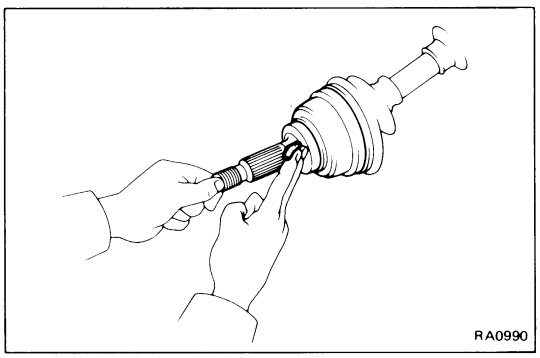

1. **INSTALL REAR DRIVE SHAFT**
   (a) Apply MP grease to the outboard joint shaft.
   (b) Using a jack, raise the No. 2 suspension arm until it is horizontal.

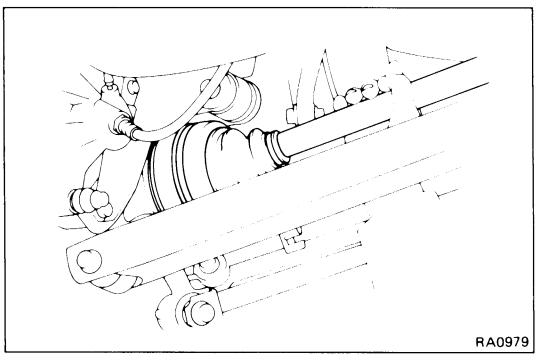

   (c) First insert the outboard joint shaft to the axle hub, and then install it to the side gear shaft.

   HINT: Do not damage the boots.

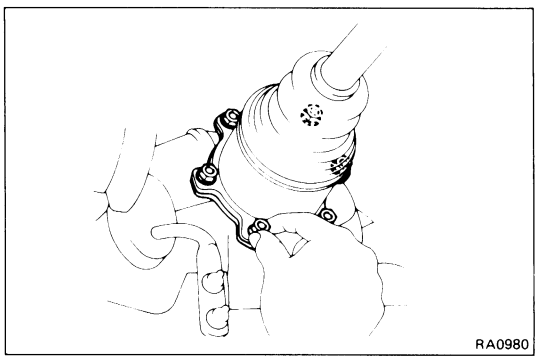

   (d) Temporarily install the six washers and nuts.

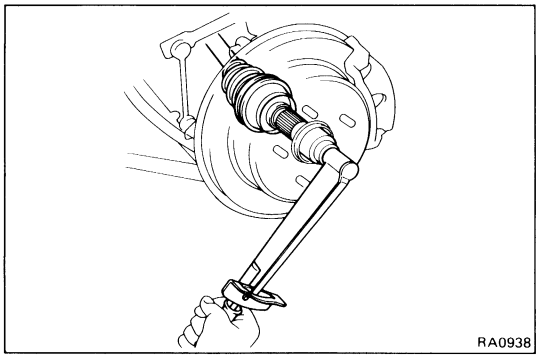

2. INSTALL BEARING LOCK NUT, LOCK NUT CAP AND COTTER PIN

(a) Apply engine oil to the thread of nut.

(b) Torque the bearing lock nut while depressing the brake pedal.

Torque: 2,800 kg-cm (203 ft-lb, 275 N·m)

(c) Install the lock nut cap and a new cotter pin.

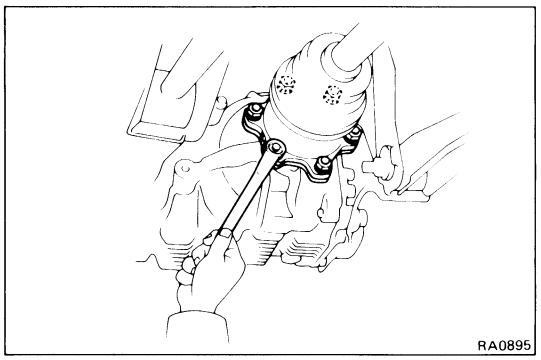

3. TORQUE NUTS HOLDING REAR DRIVE SHAFT TO DIFFERENTIAL SIDE GEAR SHAFT

Torque the six nuts while depressing the brake pedal.

Torque: 700 kg-cm (51 ft-lb, 69 N·m)

4. INSTALL WHEEL AND REMOVE STANDS

DIFFERENTIAL

COMPONENTS

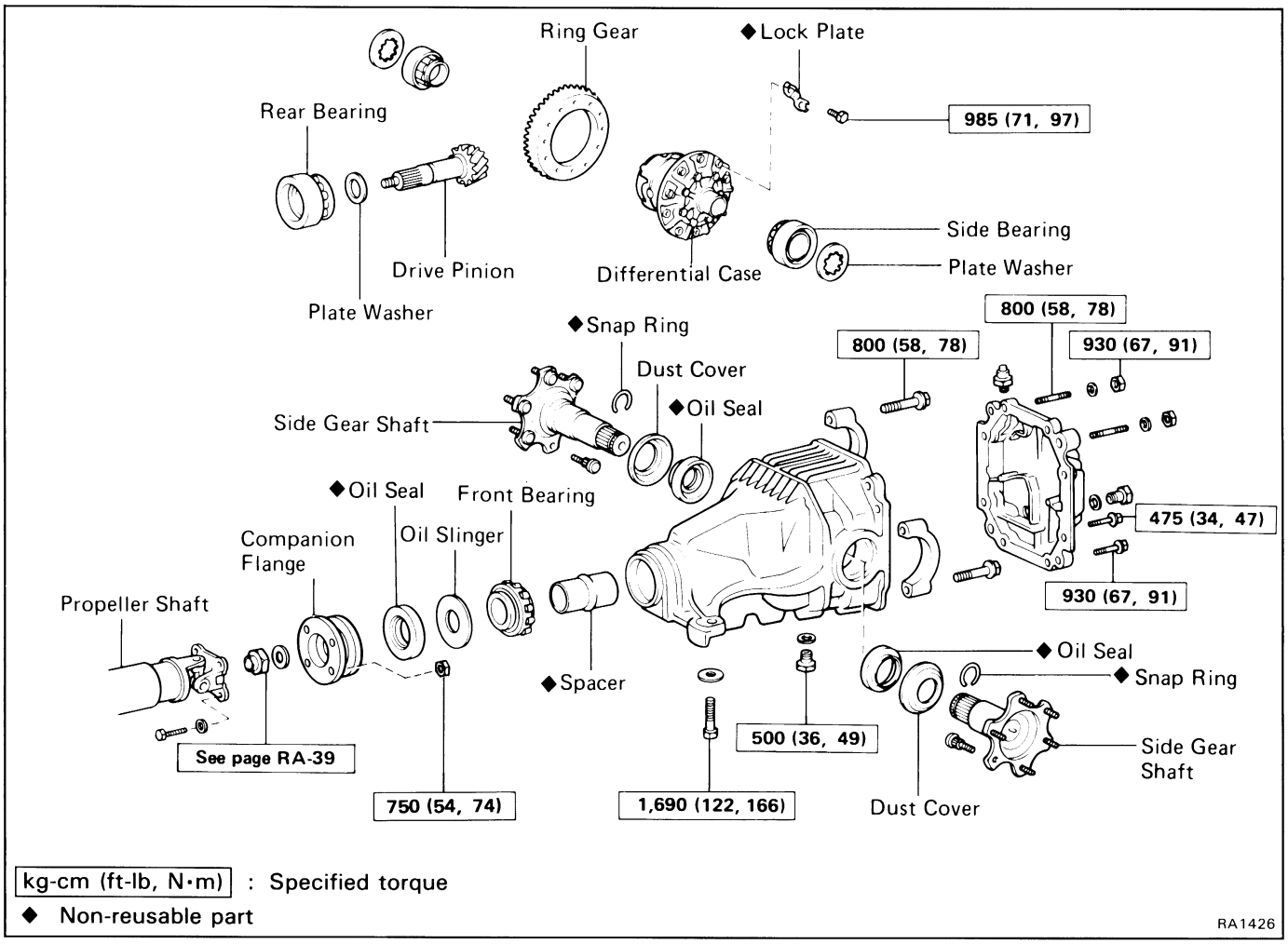

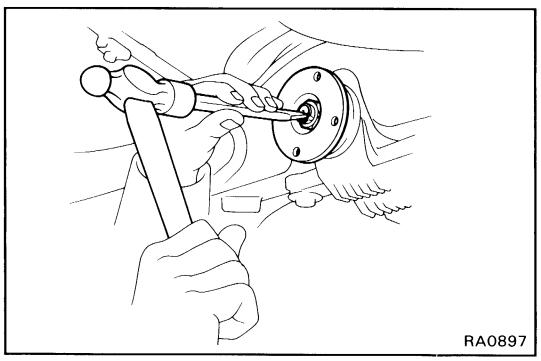

ON-VEHICLE REPLACEMENT OF FRONT OIL SEAL

1. **DISCONNECT PROPELLER SHAFT (See page PR-3)**

2. **REMOVE COMPANION FLANGE**

   (a) Using a hammer and chisel, loosen the staked part of the nut.

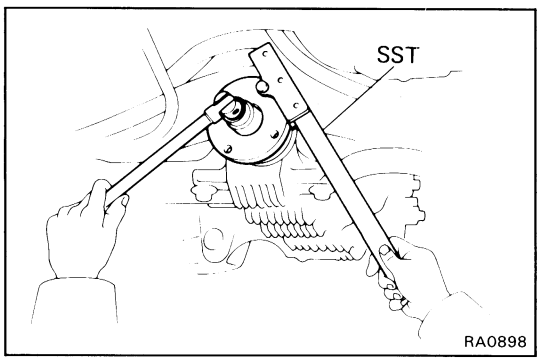

   (b) Using SST to hold the flange, remove the nut.

   SST 09330-00021

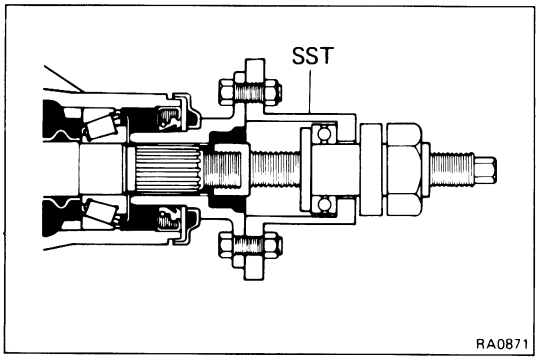

(c) Using SST, remove the companion flange.

SST 09557-22022

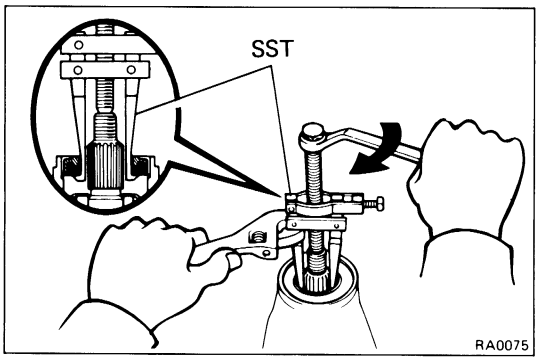

3. REMOVE FRONT OIL SEAL

(a) Using SST, remove the oil seal.

SST 09308-10010

(b) Remove the oil slinger.

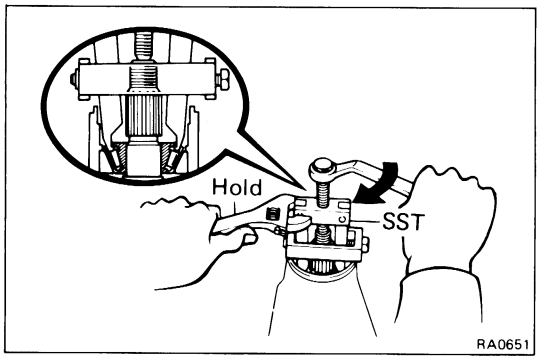

4. REMOVE FRONT BEARING AND BEARING SPACER

(a) Using SST, remove the front bearing.

SST 09556-22010

(b) Remove the bearing spacer.

If the front bearing is damaged or worn, replace the bearing.

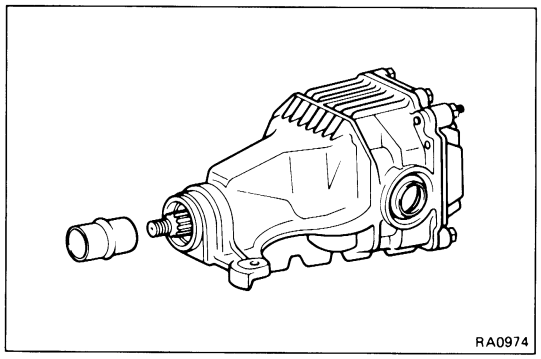

5. INSTALL NEW BEARING SPACER AND FRONT BEARING

(a) Install a new bearing spacer on the shaft.

(b) Install the front bearing on the shaft.

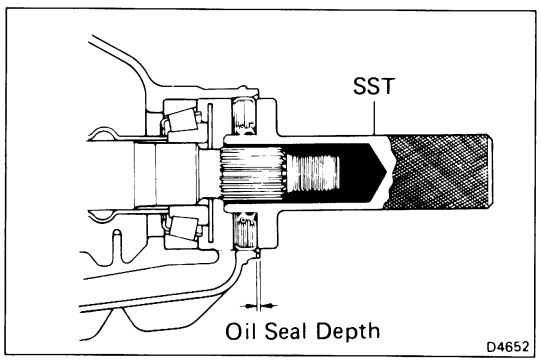

6. INSTALL OIL SLINGER AND NEW OIL SEAL

(a) Install the oil slinger facing as shown.

(b) Using SST, drive in a new oil seal.

SST 09554-30011

Oil seal drive in depth: 1.5 mm (0.059 in.)

(c) Apply MP grease to the oil seal lip.

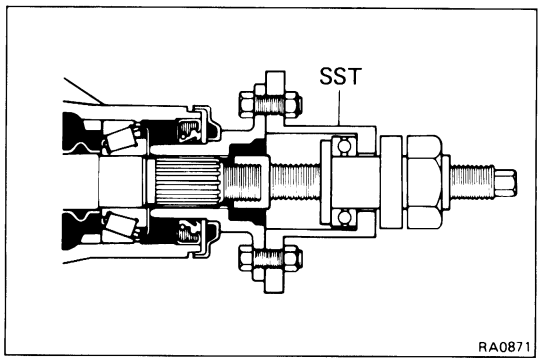

7. INSTALL COMPANION FLANGE

(a) Using SST, install the companion flange on the shaft.

SST 09557-22022

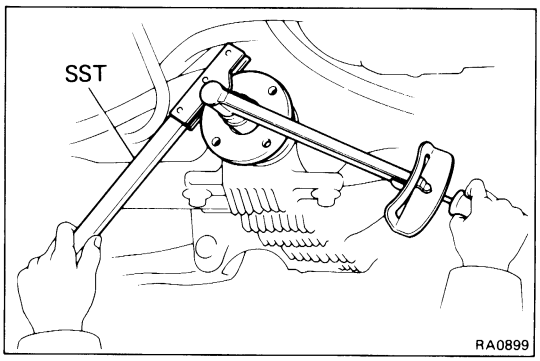

(b) Coat the threads of a new nut with MP grease.

(c) Using SST to hold the flange, tighten the nut.

SST 09330-00021

Torque: 1,850 kg-cm (134 ft-lb, 181 N·m)

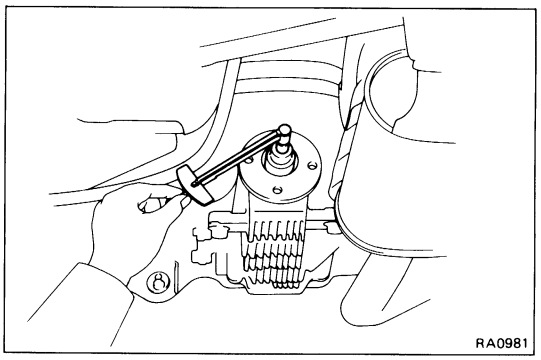

8. CHECK FRONT BEARING PRELOAD

Using a torque wrench, measure the preload of the backlash between the drive pinion and ring gear.

Preload:

New bearing	**10 — 16 kg-cm (8.7 — 13.9 in.-lb, 1.0 — 1.6 N·m)**
Reused bearing	**5 — 8 kg-cm (4.3 — 6.9 in.-lb, 0.5 — 0.8 N·m)**

- **If preload is greater than specification, replace the bearing spacer.**
- **If preload is less than specification, retighten the nut 130 kg-cm (9 ft-lb, 13 N·m) at a time until the specified preload is reached.**

If the maximum torque is exceed while retightening the nut, replace the bearing spacer and repeat the preload procedure. Do not back off the pinion nut to reduce the preload.

Maximum torque: 3,450 kg-cm (250 ft-lb, 338 N·m)

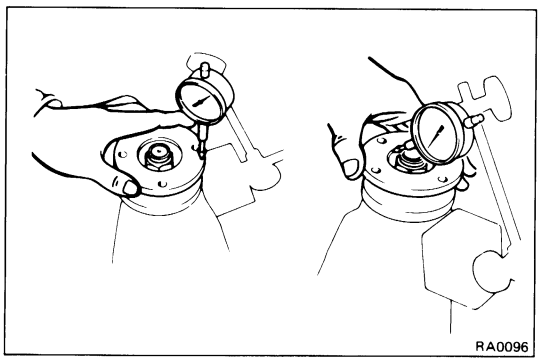

9. CHECK RUNOUT OF COMPANION FLANGE

Using a dial indicator, measure the lateral and radial runout of the companion flange.

Maximum lateral runout: 0.1 mm (0.004 in.)
Maximum radial runout: 0.1 mm (0.004 in.)

If the runout is greater than the maximum, inspect the bearings.

10. STAKE DRIVE PINION NUT

11. CONNECT PROPELLER SHAFT
(See page PR-9)

ON-VEHICLE REPLACEMENT OF SIDE GEAR SHAFT OIL SEAL

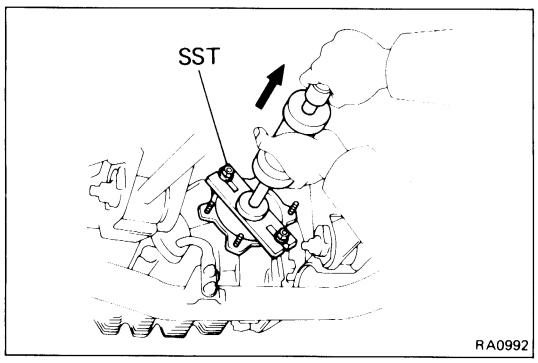

1. DRAIN DIFFERENTIAL OIL

2. REMOVE REAR DRIVE SHAFT
(See page RA-16)

3. REMOVE SIDE GEAR SHAFT

(a) Using SST, remove the side gear shaft.

SST 09520-24010

(b) Remove the snap ring from the side gear shaft.

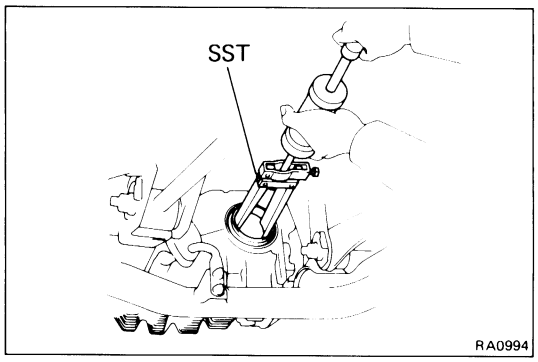

4. REMOVE SIDE GEAR SHAFT OIL SEAL

Using SST, remove the oil seal.

SST 09308-00010

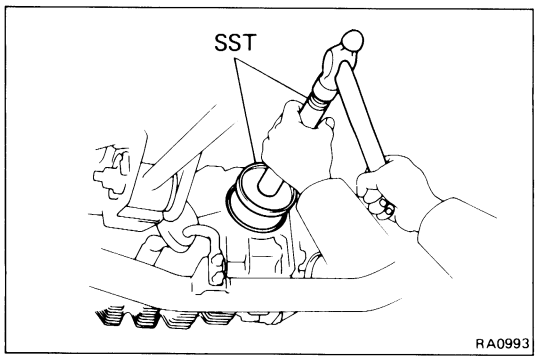

5. INSTALL SIDE GEAR SHAFT OIL SEAL

(a) Using SST, drive in the oil seal.

SST 09608-10010, 09608-35014 (09608-06020)

(b) Apply MP grease to the oil seal lip.

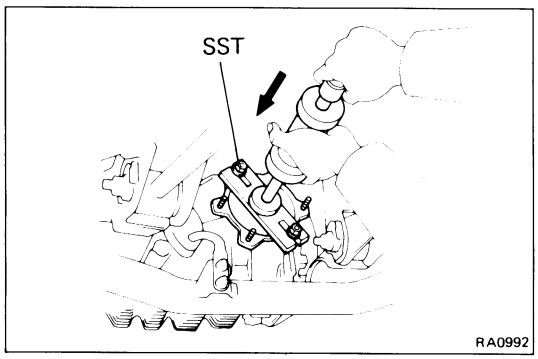

6. INSTALL SIDE GEAR SHAFT

(a) Install a new snap ring to the side gear shaft.

(b) Using SST, drive in the side gear shaft to the differential.

SST 09520-24010

7. INSTALL DRIVE SHAFT
(See page RA-21)

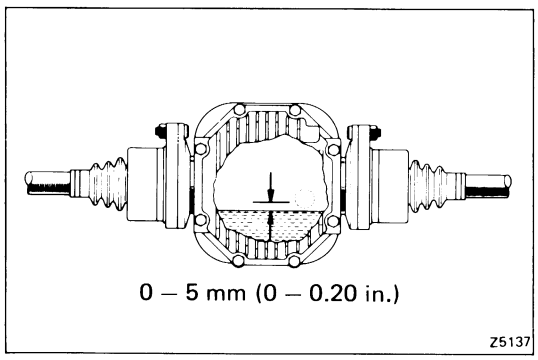

8. CHECK DIFFERENTIAL OIL

Fill with hypoid gear oil if necessary.

Oil grade:	**API GL-5 hypoid gear oil or LSD oil (LSD only)**
Viscosity:	**Above −18°C (0°F) SAE 90** **Below −18°C (0°F) SAE 80W-90 or 80W**
Capacity:	**1.3 liters (1.4 US qts, 1.1 Imp.qts)**

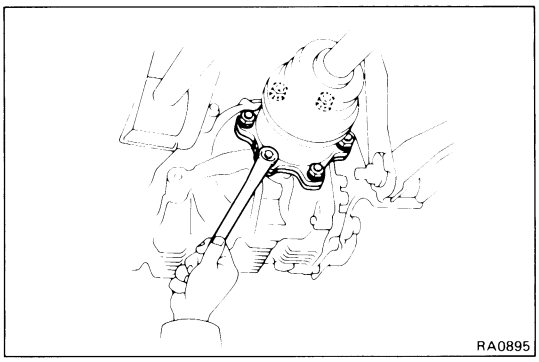

REMOVAL OF DIFFERENTIAL

1. **DRAIN DIFFERENTIAL OIL**

2. **DISCONNECT REAR DRIVE SHAFT**

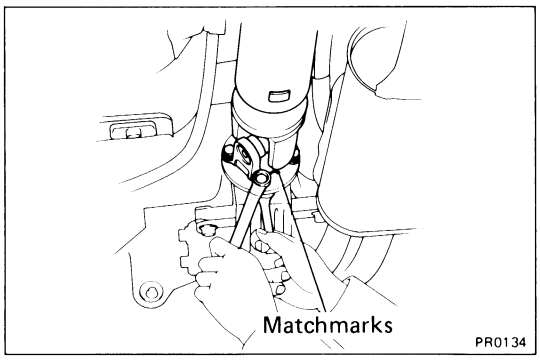

3. **DISCONNECT PROPELLER SHAFT FROM DIFFERENTIAL**
   (a) Place matchmarks on the propeller shaft flange and companion flange.
   (b) Remove the four bolts and nuts.

4. **SUPPORT DIFFERENTIAL WITH TRANSMISSION JACK**

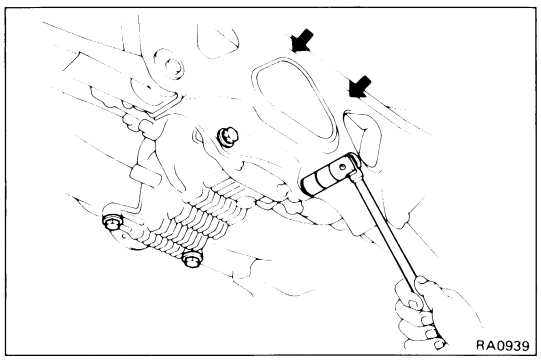

5. **REMOVE DIFFERENTIAL**
   Remove the four differential mounting bolts and two nuts, remove the differential from the body.

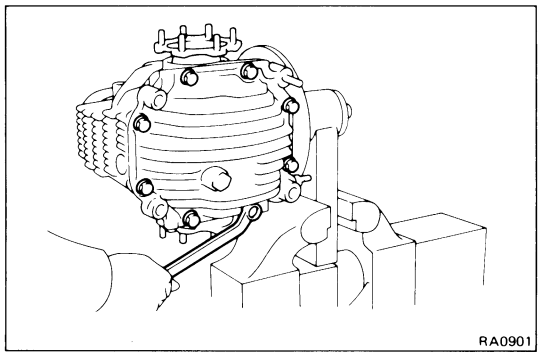

INSPECTION OF DIFFERENTIAL CARRIER

1. **REMOVE DIFFERENTIAL CARRIER COVER**
   (a) Remove the eight bolts from carrier cover.

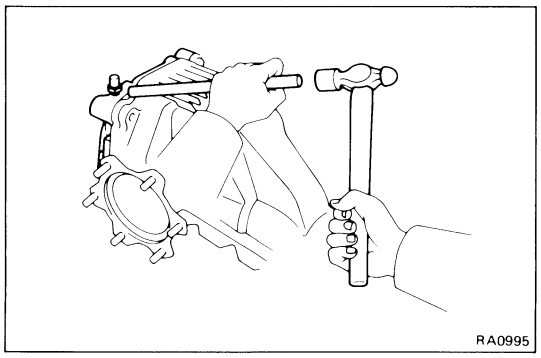

   (b) Using a brass bar and hammer, separate the cover and carrier.

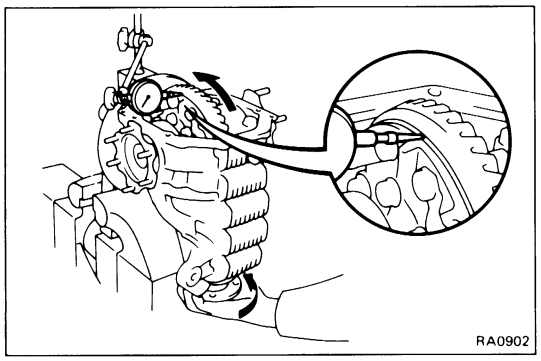

2. CHECK RING GEAR RUNOUT

If the runout is greater than maximum, replace a new ring gear.

Maximum runout: 0.10 mm (0.004 in.)

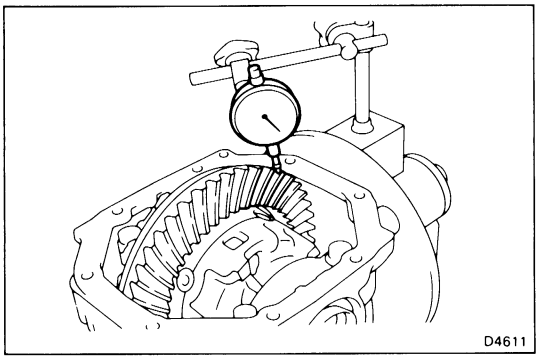

3. CHECK RING GEAR BACKLASH

If the backlash is not within specification, adjust the side bearing preload or repair as necessary.

Backlash: 0.13 — 0.18 mm (0.0051 — 0.0071 in.)

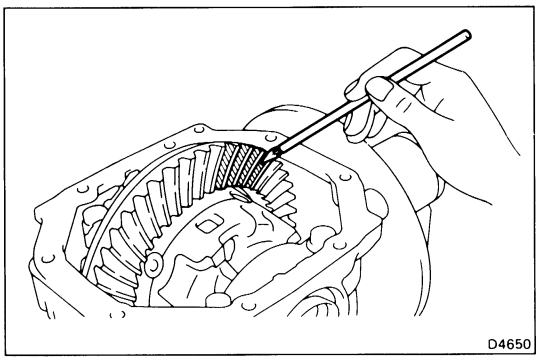

4. CHECK TOOTH CONTACT (See page RA-37)

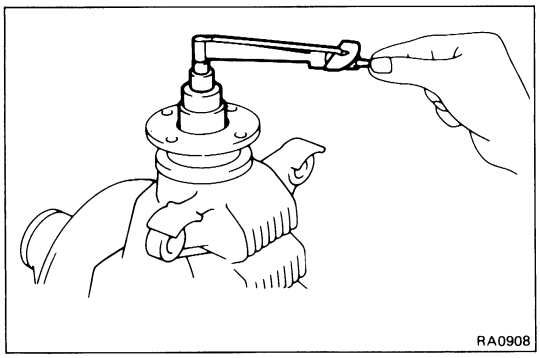

5. MEASURE DRIVE PINION PRELOAD

Using a torque wrench, measure the preload of the backlash between the drive pinion and ring gear.

Preload (at starting):
5 — 8 kg-cm (4.3 — 6.9 in.-lb, 0.5 — 0.8 N·m)

6. CHECK TOTAL PRELOAD

Using a torque wrench, measure the total preload.

Total preload: In addition to drive pinion preload
4 — 6 kg-cm (3.5 — 5.2 in.-lb, 0.4 — 0.6 N·m)

If necessary, disassembly and inspect a differential.

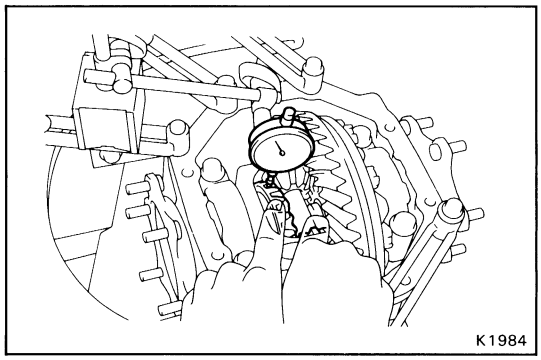

7. **(CONVENTIONAL 2 PINION TYPE ONLY) CHECK SIDE GEAR BACKLASH**

Measure the side gear backlash while holding one pinion gear toward the case.

Standard backlash: 0.05 — 0.20 mm (0.0020 — 0.0079 in.)

If the backlash is out of specification, install the correct thrust washers. (See page RA-44)

DISASSEMBLY OF DIFFERENTIAL CARRIER

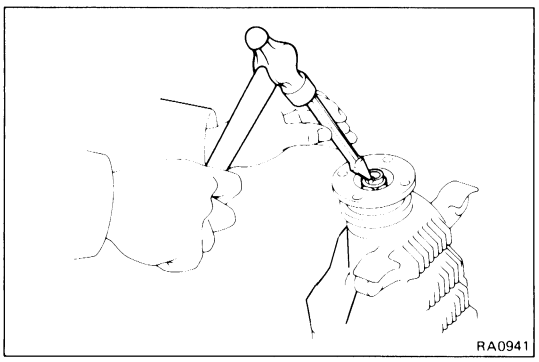

1. REMOVE COMPANION FLANGE

(a) Using a hammer and chisel, loosen the staked part of the nut.

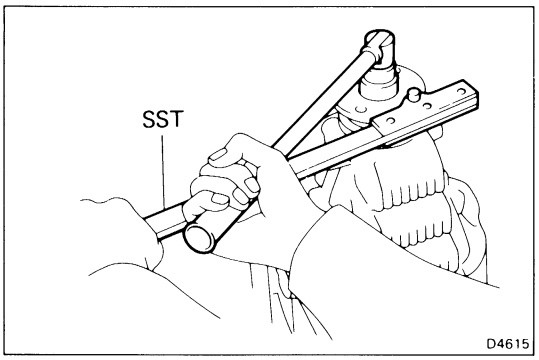

(b) Using SST to hold the flange, remove the nut.

SST 09330-00021

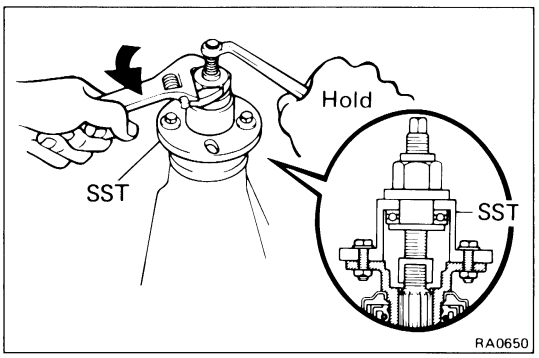

(c) Using SST, remove the companion flange.

SST 09557-22022

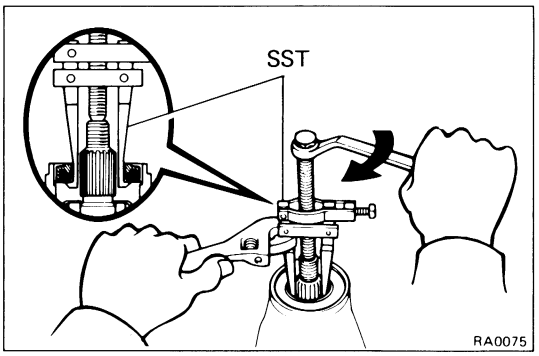

2. REMOVE FRONT OIL SEAL AND OIL SLINGER

(a) Using SST, remove the oil seal from the housing.

SST 09308-10010

(b) Remove the oil slinger.

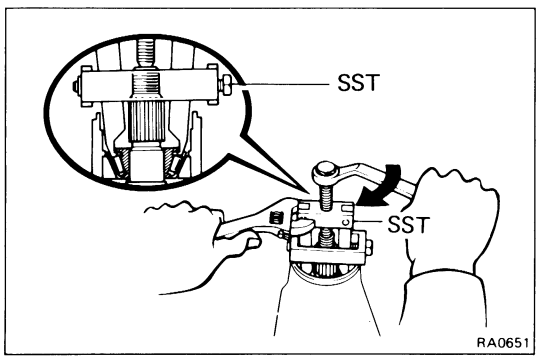

3. REMOVE FRONT BEARING AND BEARING SPACER

(a) Using SST, remove the bearing from the housing.

SST 09556-22010

(b) Remove the bearing spacer.

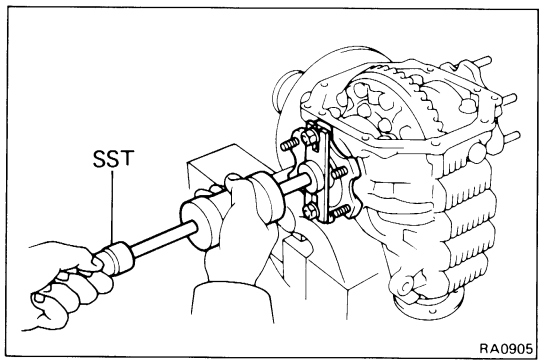

4. REMOVE SIDE GEAR SHAFT

Using SST, pull out the side gear shaft from the differential.

SST 09520-24010

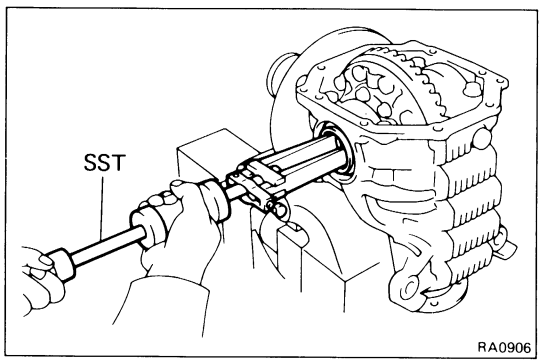

5. REMOVE SIDE GEAR SHAFT OIL SEAL

Using SST, remove the oil seal from the housing.

SST 09308-00010

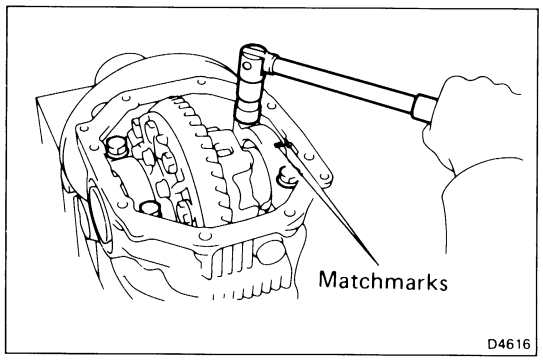

6. REMOVE DIFFERENTIAL CASE

(a) Place matchmarks on the bearing cap and differential carrier.

(b) Remove the two bearing caps.

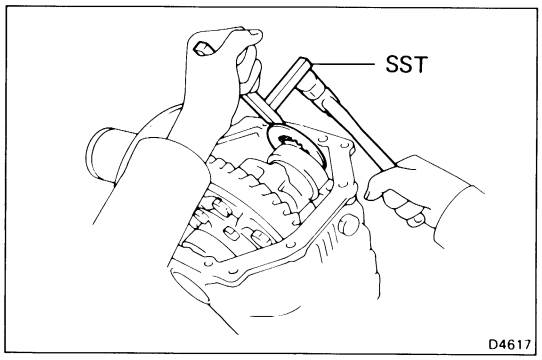

(c) Using SST, remove the two side bearing preload adjusting plate.

SST 09504-22011

HINT: Measure the adjusting plate washer and note the thickness.

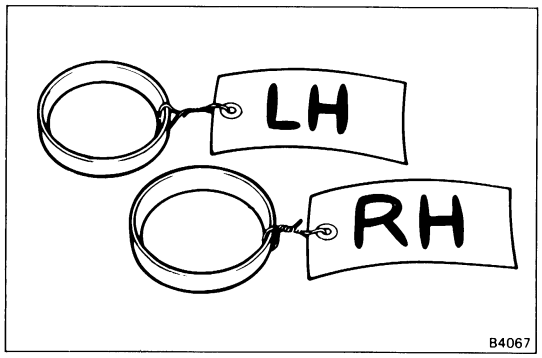

(d) Remove the differential case and bearing outer race from the carrier.

HINT: Tag the bearing outer races to show the location for reassembly.

7. REMOVE DRIVE PINION FROM DIFFERENTIAL CARRIER

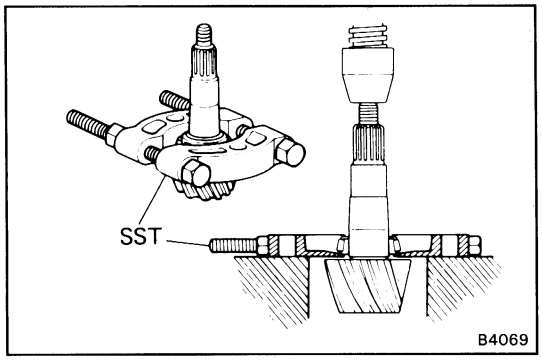

8. REMOVE DRIVE PINION REAR BEARING

Using SST and a press, remove the bearing from the drive pinion.

SST 09950-00020

HINT: If the drive pinion or ring gear are damaged replace them a set.

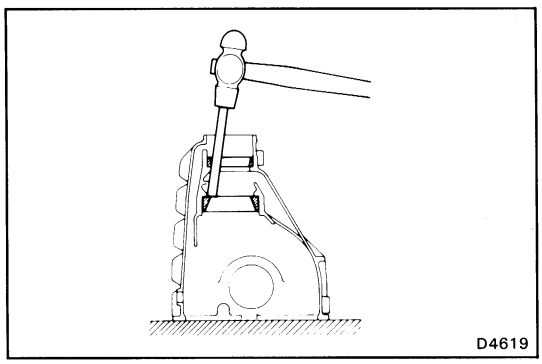

9. REMOVE FRONT AND REAR BEARING OUTER RACE

Using a hammer and brass bar, drive out the outer race from the carrier.

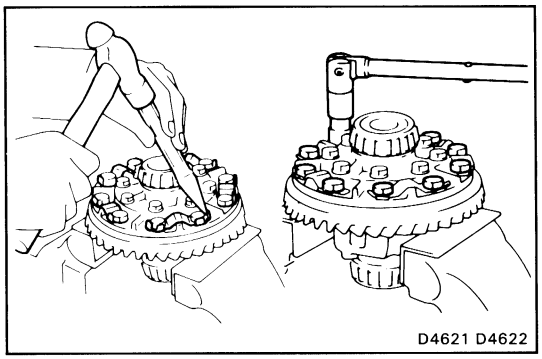

10. REMOVE RING GEAR

(a) Remove the ring gear set bolts and lock plate.

(b) Place matchmarks on the ring gear and differential case.

(c) Using a plastic or copper hammer, tap on the ring gear to separate it from the differential case.

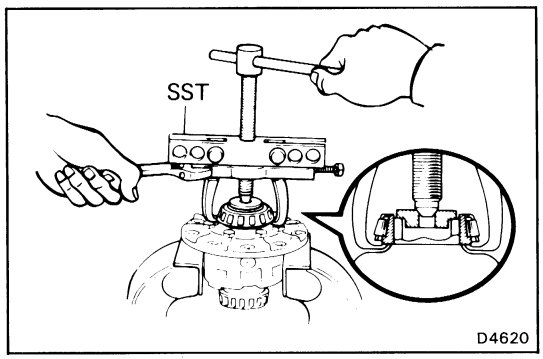

11. REMOVE SIDE BEARING

Using SST, remove the side bearing from the differential case.

SST 09950-20017

12. DISASSEBLE DIFFERENTIAL CASE
(Conventional type: See page RA-43, 46)
(LSD type: See page RA-49)

ASSEMBLY OF DIFFERENTIAL CARRIER

(See page RA-23)

1. ASSEMBLE DIFFERENTIAL CASE
(Conventional type: See page RA-44, 47)
(LSD type: See page RA-53)

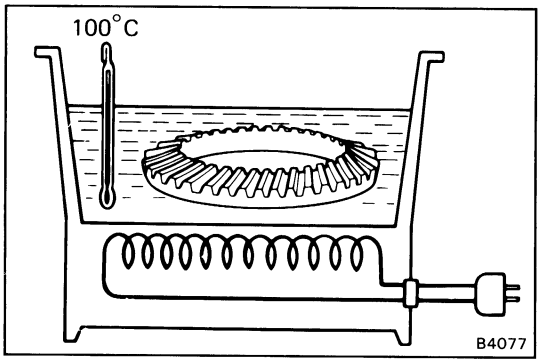

2. INSTALL RING GEAR

(a) Clean the contact surface of the differential case.

(b) Heat the ring gear to about 100°C (212°F) in an oil bath.

NOTICE: Do not heat the ring gear above 110°C (230°F).

(c) Clean the contact surface of the ring gear with cleaning solvent.

(d) Then quickly install the ring gear on the differential case.

(e) Align the matchmarks on the ring gear and differential case.

(f) Coat the ring gear set bolts with gear oil.

(g) Temporarily install the lock plates and set bolts.

(h) After the ring gear cools down enough, tighten the set bolts uniformly and a little at a time.

Torque: 985 kg-cm (71 ft-lb, 97 N·m)

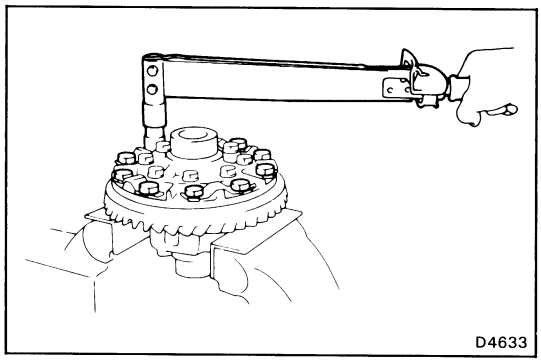

(h) Using a hammer and drift punch, stake the lock plate.

HINT: Stake one claw flush with the flat surface of the nut. For the claw contacting the protruding portion of the nut, stake the half on the tightening side.

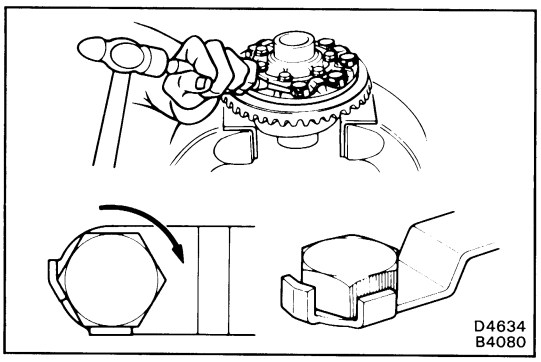

3. INSTALL NEW SIDE BEARING

Using SST and a press, install a new side bearing into the differential case.

SST 09316-60010 (09316-00010)
09608-30012 (09608-04060)

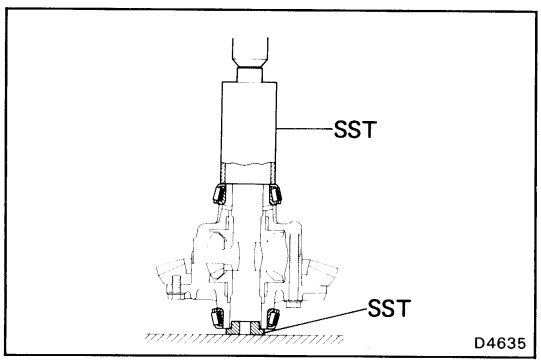

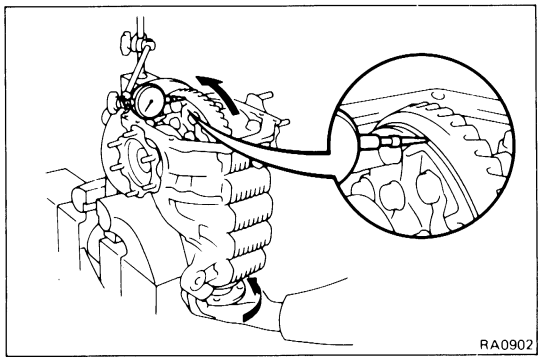

4. INSPECT RING GEAR RUNOUT

Maximum runout: 0.1 mm (0.004 in.)

Install the differential case onto the carrier and tighten the adjusting nut to where there is no play in the bearing.

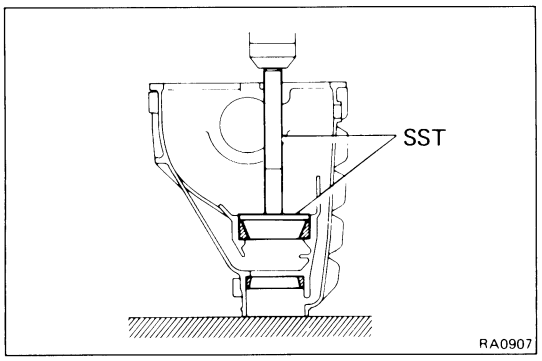

5. INSTALL FRONT AND REAR BEARING OUTER RACE

Using SST, drive in a new outer race to the carrier.

SST 09608-35014
Front (09608-06020, 09608-06110)
Rear (09608-06020, 09608-06180)

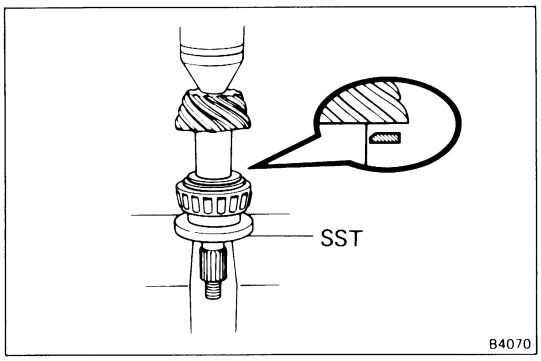

6. INSTALL DRIVE PINION REAR BEARING

(a) Install the washer on the drive pinion with the chamfered end facing the pinion gear.

(b) Using SST, press in the reused washer and rear bearing onto the drive pinion.

SST 09506-30012

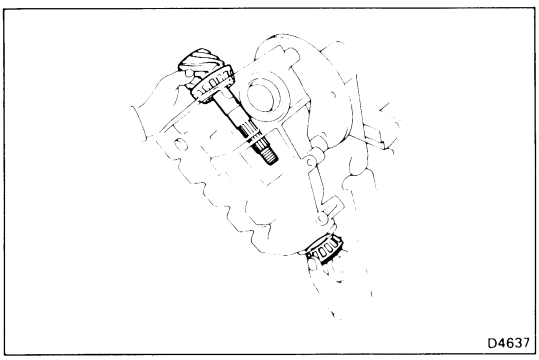

7. TEMPORARILY ADJUST DRIVE PINION PRELOAD

(a) Install the drive pinion and front bearing.

HINT: Assemble the spacer, oil slinger and oil seal after adjusting the gear contact pattern.

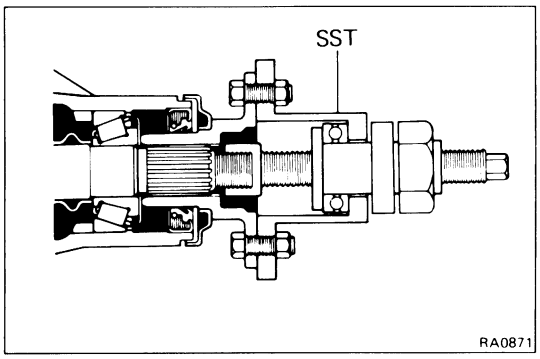

(b) Using SST, install the companion flange.
Coat the threads of the nut with MP grease.

SST 09557-22022

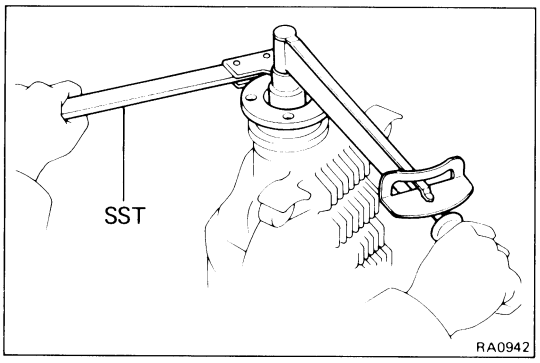

(c) Adjust the drive pinion preload by tightening the companion flange nut.
Using SST to hold the flange, tighten the nut.

SST 09330-00021

NOTICE: As there is no spacer, tighten a little at a time, being careful not to overtighten it.

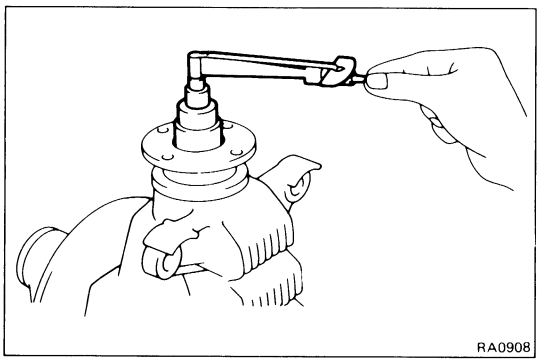

(d) Using a torque wrench, measure the preload.

Preload:

New bearing	**10 — 16 kg-cm**
	(8.7 — 13.9 in.-lb, 1.0 — 1.6 N·m)
Reused bearing	**5 — 8 kg-cm**
	(4.3 — 6.9 in.-lb, 0.5 — 0.8 N·m)

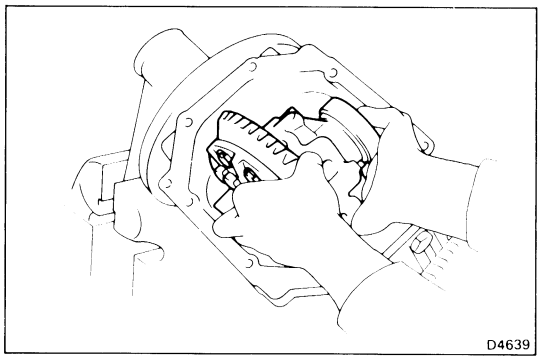

8. INSTALL DIFFERENTIAL CASE IN CARRIER

(a) Place the bearing outer races on their respective bearings. Make sure the left and right races are not interchanged.

(b) Install the differential case in the carrier.

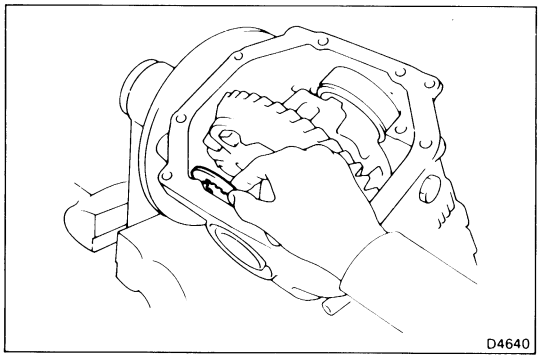

9. ADJUST RING GEAR BACKLASH

(a) Install only the plate washer on the ring gear back side.

HINT: Insure that the plate has a backlash.

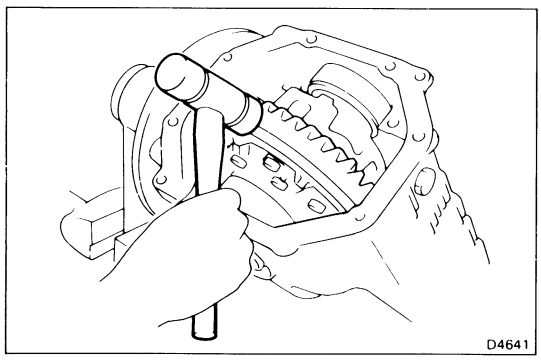

(b) Snug down the washer and bearing by tapping on the ring gear with a plastic hammer.

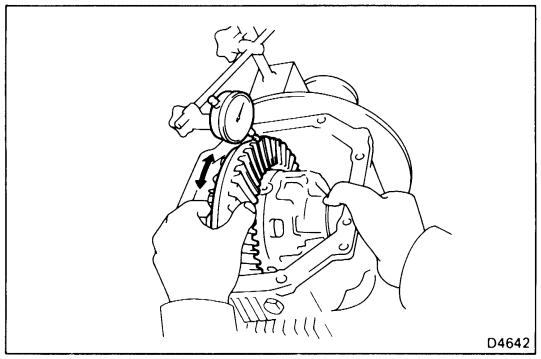

(c) Hold the side bearing boss on the teeth surface of the ring gear and measure the backlash.

Backlash (reference): 0.10 mm (0.0039 in.)

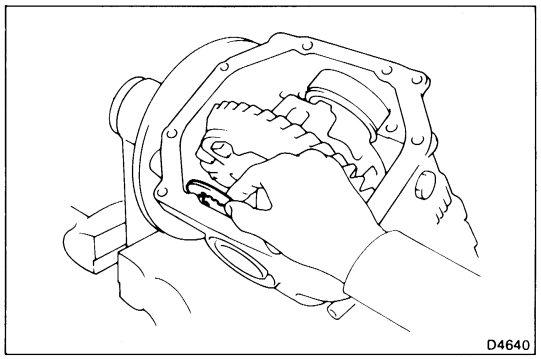

(d) Select a ring gear back plate washer using the backlash as reference. (See page RA-33)

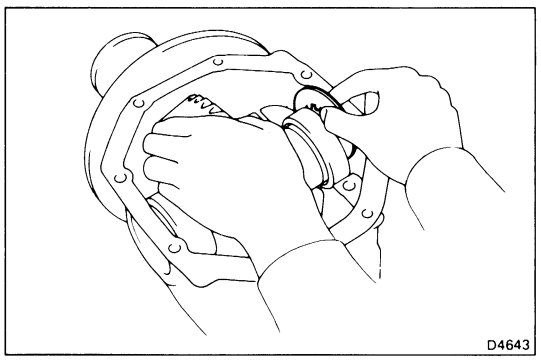

(e) Select a ring gear teeth side washer of a thickness which eliminates any clearance between the outer race and case.

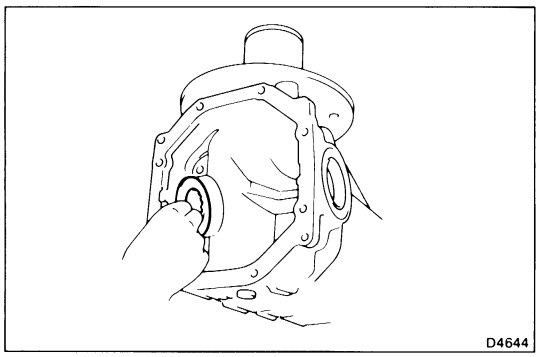

(f) Remove the plate washers and differential case.

(g) Install the plate washer into the lower part of the carrier.

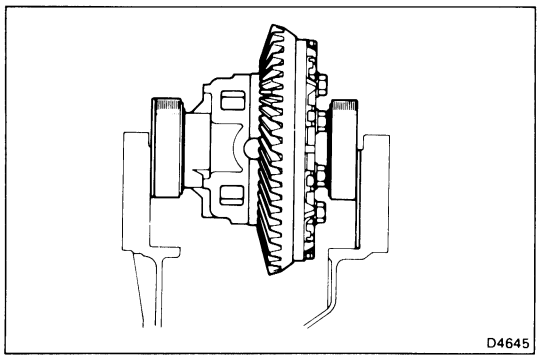

(h) Place the outer plate washer onto the differential case together with the outer race, and install the differential case with the outer race into the carrier.

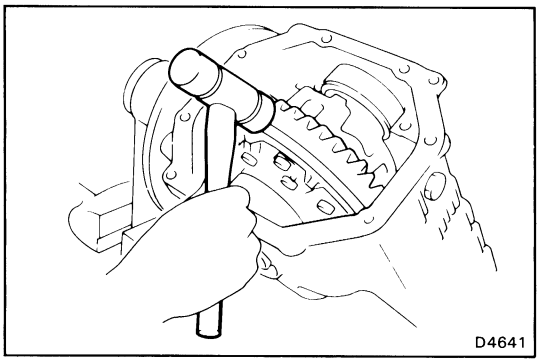

(i) Using a plastic hammer, snug down the washer and bearing by tapping the ring gear.

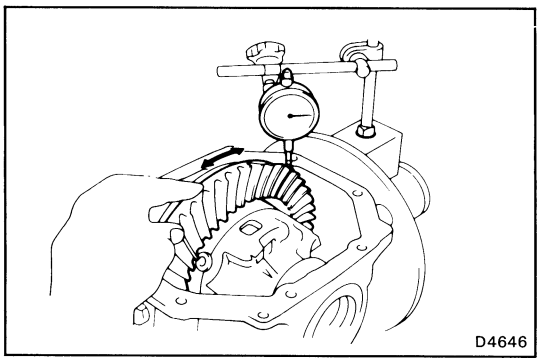

(j) Using a dial indicator, measure the ring gear backlash.

Backlash: 0.13 — 0.18 mm (0.0051 — 0.0071 in.)

(k) If not within specification, adjust by either increasing or decreasing the number of washers on both sides by an equal amount.

HINT: There should be no clearance between the plate washer and case.

Insure that there is ring gear backlash.

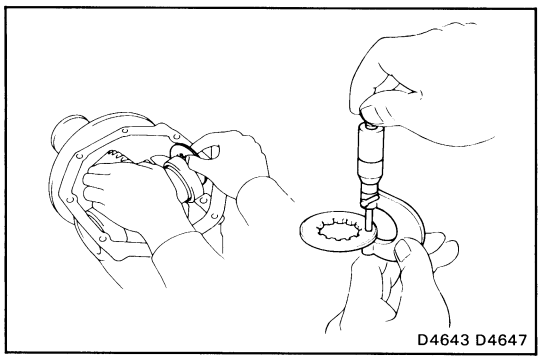

10. ADJUST SIDE BEARING PRELOAD

(a) After adjustment with the backlash as reference, remove the ring gear teeth plate washer and measure the thickness.

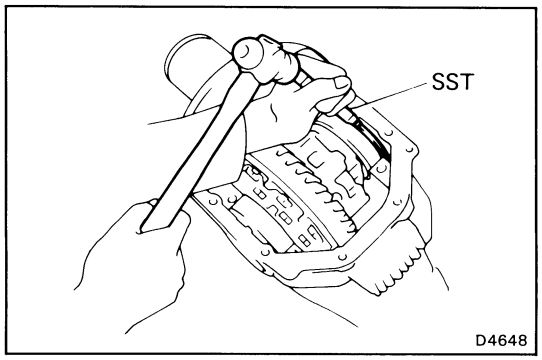

(b) Install a new washer of 0.06 — 0.09 mm (0.0024 — 0.0035 in.) thicker than the washer removed.

HINT: Select a washer which can be pressed in 2/3 of the way by finger.

(c) Using SST and a plastic hammer, tap in the side washer.

SST 09504-22011

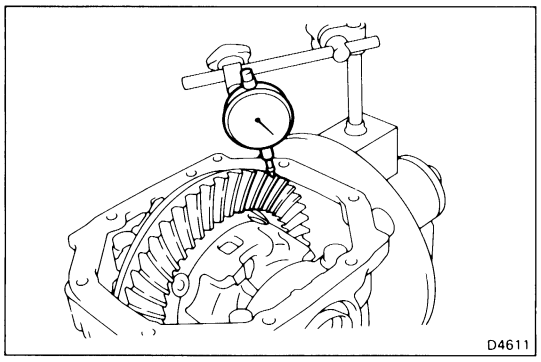

(d) Recheck the ring gear backlash.

Backlash: 0.13 — 0.18 mm (0.0051 — 0.0071 in.)

(e) If not within standard, adjust by either increasing or decreasing the washers on both sides by equal amount.

HINT: The backlash will change about 0.02 mm (0.0008 in.) with 0.03 mm (0.0012 in.) alteration of the side washer.

Washer thickness

Thickness		mm (in.)
2.57 – 2.59 (0.1012 – 0.1020)	2.90 – 2.92 (0.1142 – 0.1150)	3.23 – 3.25 (0.1272 – 0.1280)
2.60 – 2.62 (0.1024 – 0.1031)	2.93 – 2.95 (0.1154 – 0.1161)	3.26 – 3.28 (0.1283 – 0.1291)
2.63 – 2.65 (0.1035 – 0.1043)	2.96 – 2.98 (0.1165 – 0.1173)	3.29 – 3.31 (0.1295 – 0.1303)
2.66 – 2.68 (0.1047 – 0.1055)	2.99 – 3.01 (0.1177 – 0.1185)	3.32 – 3.34 (0.1307 – 0.1315)
2.69 – 2.71 (0.1059 – 0.1067)	3.02 – 3.04 (0.1189 – 0.1197)	3.35 – 3.37 (0.1319 – 0.1327)
2.72 – 2.74 (0.1071 – 0.1079)	3.05 – 3.07 (0.1201 – 0.1209)	3.38 – 3.40 (0.1331 – 0.1339)
2.75 – 2.77 (0.1083 – 0.1091)	3.08 – 3.10 (0.1213 – 0.1220)	3.41 – 3.43 (0.1343 – 0.1350)
2.78 – 2.80 (0.1094 – 0.1102)	3.11 – 3.13 (0.1224 – 0.1232)	3.44 – 3.46 (0.1354 – 0.1362)
2.81 – 2.83 (0.1106 – 0.1114)	3.14 – 3.16 (0.1236 – 0.1244)	3.47 – 3.49 (0.1366 – 0.1374)
2.84 – 2.86 (0.1118 – 0.1126)	3.17 – 3.19 (0.1248 – 0.1256)	
2.87 – 2.89 (0.1130 – 0.1138)	3.20 – 3.22 (0.1260 – 0.1268)	

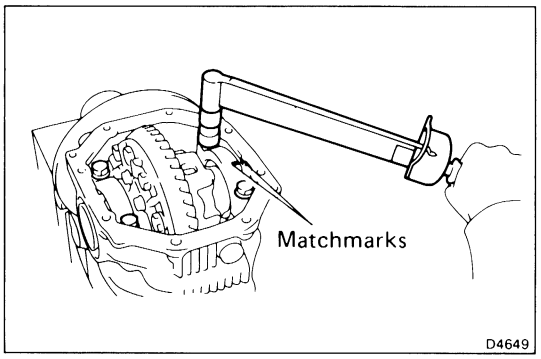

11. INSTALL SIDE BEARING CAPS

Align the marks on the cap and carrier.

Torque: 800 kg-cm (58 ft-lb, 78 N·m)

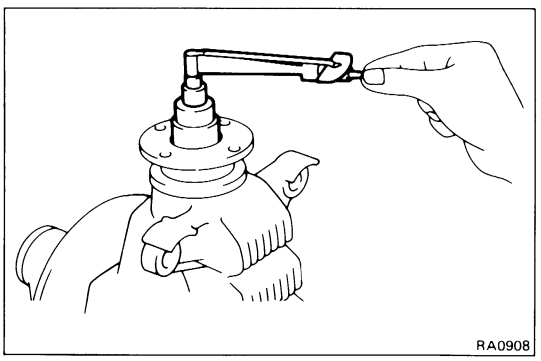

12. MEASURE TOTAL PRELOAD

Using a torque wrench, measure the total preload.

Total preload: In addition to drive pinion preload
4 — 6 kg-cm (3.5 — 5.2 in.-lb, 0.4 — 0.6 N·m)

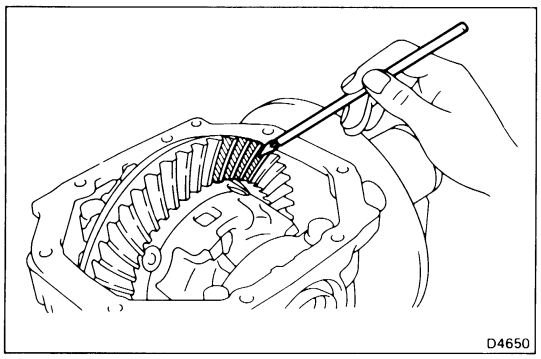

13. INSPECT TOOTH CONTACT BETWEEN RING GEAR AND DRIVE PINION

(a) Coat 3 or 4 teeth at three different position on the ring gear with red lead.

(b) Hold the companion flange firmly and rotate the ring gear in both directions.

(c) Inspect the tooth pattern.

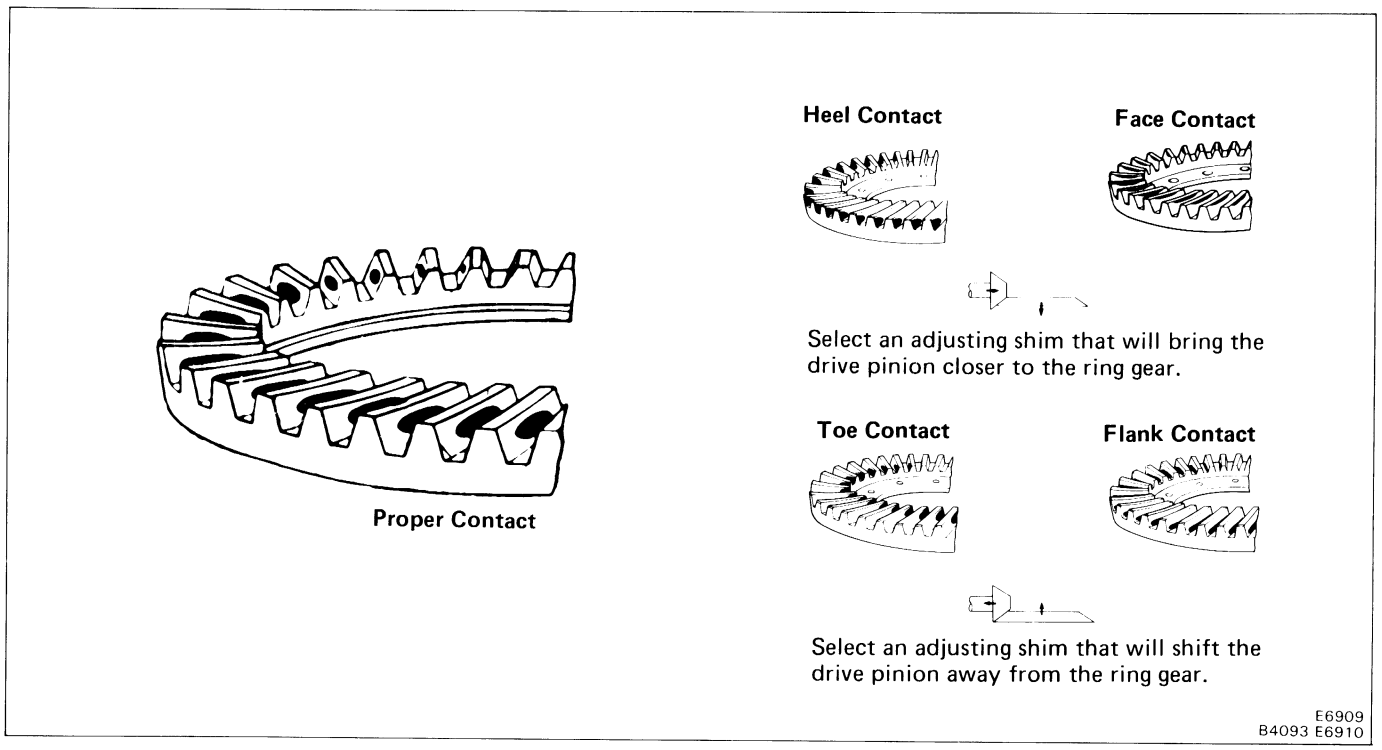

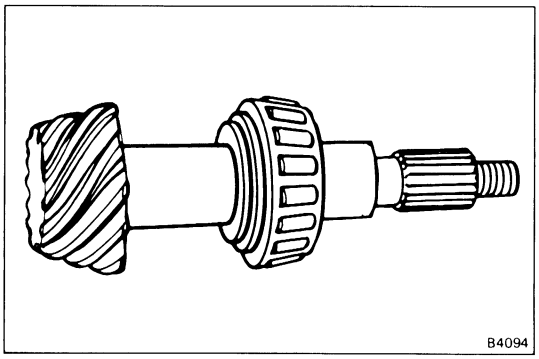

If the teeth are not contacting properly, use the following chart to select a proper washer for correction.

Washer thickness

Thickness	mm (in.)		
1.70	(0.0669)	2.03	(0.0799)
1.73	(0.0681)	2.06	(0.0811)
1.76	(0.0693)	2.09	(0.0823)
1.79	(0.0705)	2.12	(0.0835)
1.82	(0.0717)	2.15	(0.0846)
1.85	(0.0728)	2.18	(0.0858)
1.88	(0.0740)	2.21	(0.0870)
1.91	(0.0752)	2.24	(0.0882)
1.94	(0.0764)	2.27	(0.0894)
1.97	(0.0776)	2.30	(0.0906)
2.00	(0.0787)	2.33	(0.0917)

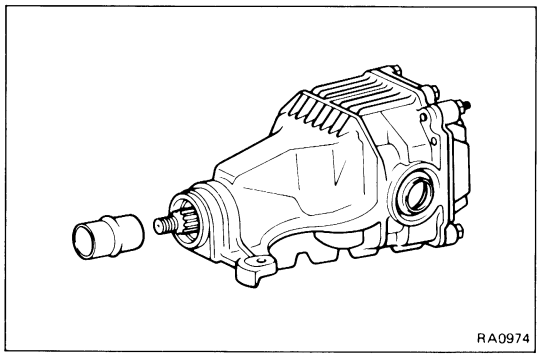

14. REMOVE COMPANION FLANGE (See page RA-30)

15. REMOVE FRONT BEARING (See page RA-30)

16. INSTALL NEW BEARING SPACER AND FRONT BEARING

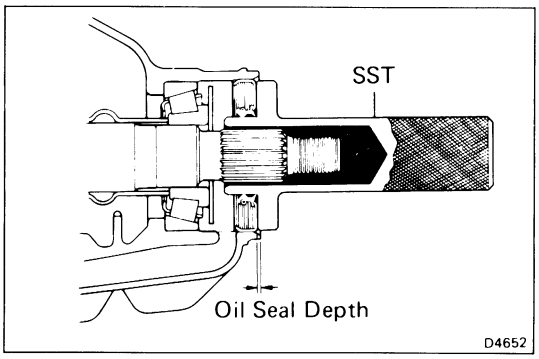

17. INSTALL OIL SLINGER AND NEW FRONT OIL SEAL

(a) Install the oil slinger.

(b) Using SST, drive in a new oil seal.

SST 09554-30011

Oil seal drive in depth: 1.5 mm (0.059 in.)

(c) Apply MP grease to the oil seal lip.

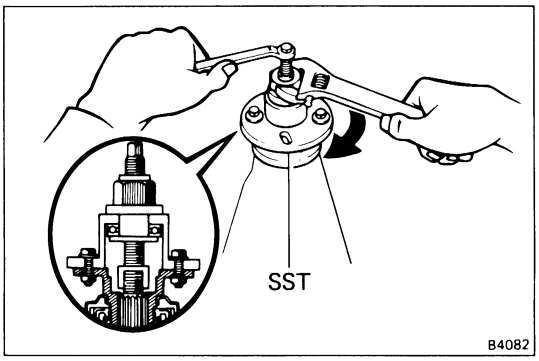

18. INSTALL COMPANION FLANGE

(a) Using SST, install the companion flange on the shaft.

SST 09557-22022

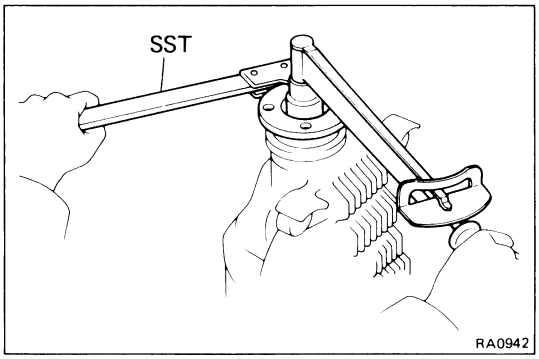

(b) Coat the threads of a new nut with MP grease.

(c) Using SST to hold the flange, tighten the nut.

SST 09330-00021

Torque: 1,850 kg-cm (134 ft-lb, 181 N·m)

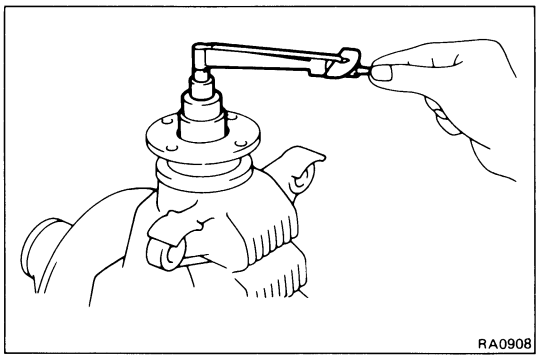

19. CHECK FRONT BEARING PRELOAD

Using a torque wrench, measure the preload of the backlash between the drive pinion and ring gear.

Preload:

New bearing	**10 — 16 kg-cm (8.7 — 13.9 in.-lb, 1.0 — 1.6 N·m)**
Reused bearing	**5 — 8 kg-cm (4.3 — 6.9 in.-lb, 0.5 — 0.8 N·m)**

- **If preload is greater than specification, replace the bearing spacer.**
- **If preload is less than specification, retighten the nut 130 kg-cm (9 ft-lb, 13 N·m) at a time until the specified preload is reached.**

If the maximum torque is exceed while retightening the nut, replace the bearing spacer and repeat the preload procedure. Do not back off the pinion nut to reduce the preload.

Maximum torque: 3,450 kg-cm (250 ft-lb, 338 N·m)

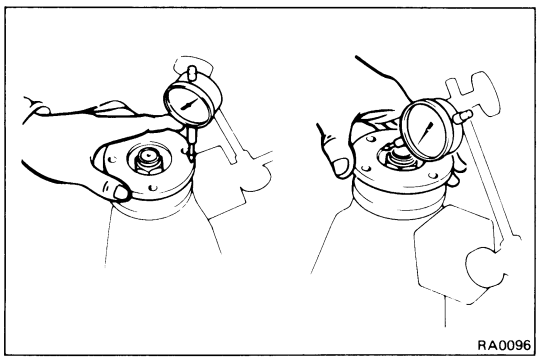

20. CHECK RUNOUT OF COMPANION FLANGE

Using a dial indicator, measure the lateral and radial runout of the companion flange.

If the runout is greater than the maximum, inspect the bearing.

Maximum lateral runout: 0.1 mm (0.004 in.)
Maximum radial runout: 0.1 mm (0.004 in.)

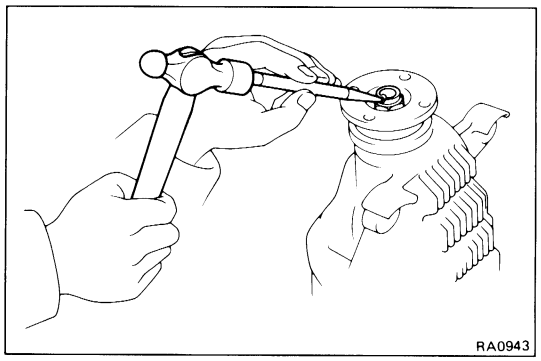

21. STAKE DRIVE PINION NUT

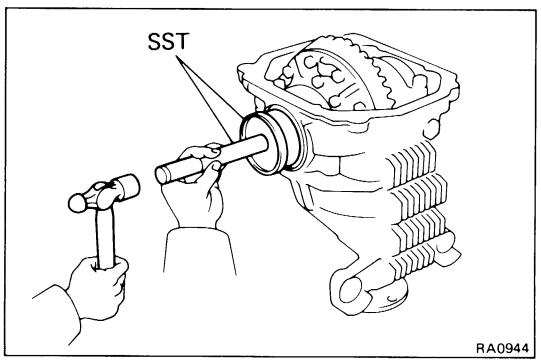

22. INSTALL SIDE GEAR SHAFT OIL SEAL

(a) Coat the oil seal lip with MP grease.

(b) Using SST, drive in the oil seal until it is flush with the carrier end surface.

SST 09608-10010 and 09608-35014 (09608-06020)

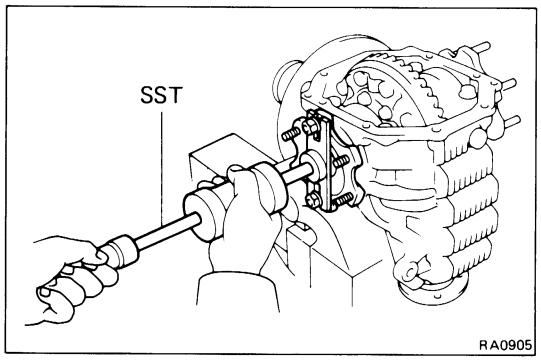

23. INSTALL SIDE GEAR SHAFT

(a) Install a new snap ring to the side gear shaft.

(b) Using SST, drive in the side gear shaft until it contacts the pinion shaft.

SST 09520-24010

HINT: As the LSD cannot be checked visually, check that the shaft is fully inserted by confirming the should it makes when it is tapped.

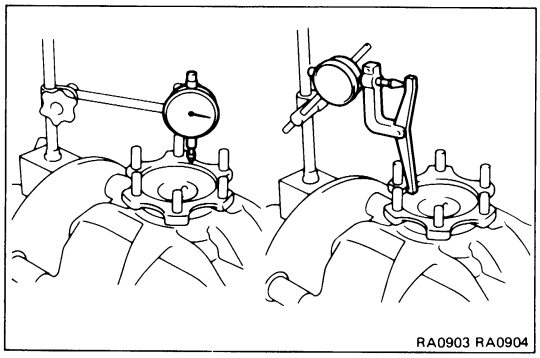

24. MEASURE SIDE GEAR SHAFT RUNOUT

Maximum lateral runout: 0.2 mm (0.008 in.)
Maximum radial runout: 0.2 mm (0.008 in.)

If the runout is greater than the maximum, replace the side gear shaft.

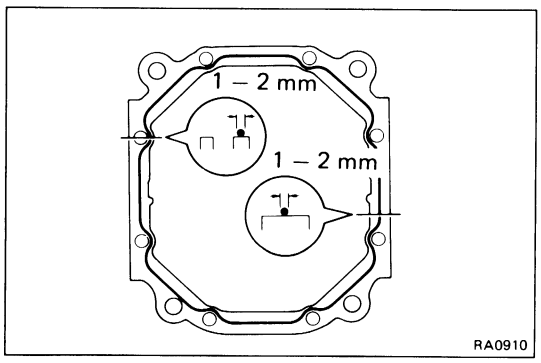

25. INSTALL DIFFERENTIAL CARRIER COVER

(a) Clean contacting surfaces of any residual packing material using gasoline or alcohol.

(b) Apply seal packing to the carrier.

Seal packing: Part No. 08826-00090, THREE BOND 1281 or equivalent

HINT: Install the carrier cover within 3 minutes after applying seal packing.

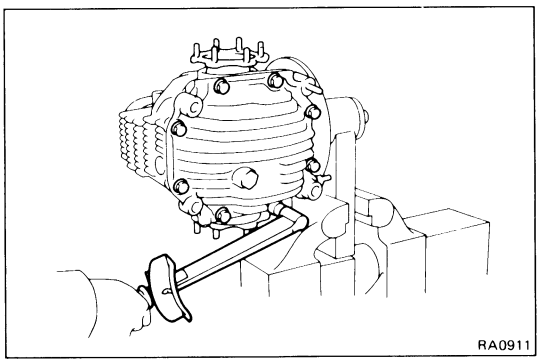

(c) Torque the set bolts.

Torque: 475 kg-cm (34 ft-lb, 47 N·m)

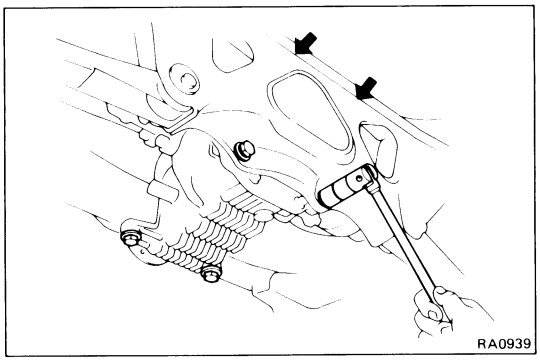

INSTALLATION OF DIFFERENTIAL

(See page RA-23)

1. **INSTALL DIFFERENTIAL**

   Position the differential and torque the bolts and nuts.

   Torque:

Stud bolts	**800 kg-cm (58 ft-lb, 78 N·m)**
Rear nuts	**930 kg-cm (67 ft-lb, 91 N·m)**
Rear bolts	**930 kg-cm (67 ft-lb, 91 N·m)**
Front bolts	**1,690 kg-cm (122 ft-lb, 166 N·m)**

2. **INSTALL REAR DRIVE SHAFT**
   (See page RA-21)

3. **CONNECT PROPELLER SHAFT**
   (See page PR-9)

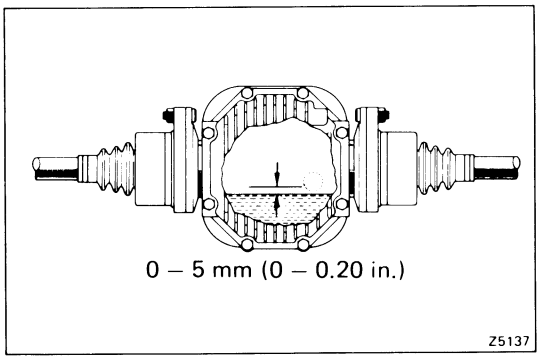

4. **FILL DIFFERENTIAL WITH GEAR OIL**

   Oil grade: **API GL-5 hypoid gear oil or for LSD oil (LSD only)**
   Viscosity: **Above −18°C (0°F) SAE 90**
   Below −18°C (0°F) SAE 80W−90 or 80W
   Capacity: **1.3 liters (1.4 US qts, 1.1 Imp.qts)**

   Install a filler plug.

Differential Case (Conventional 2 Pinion Type Differential)

COMPONENTS

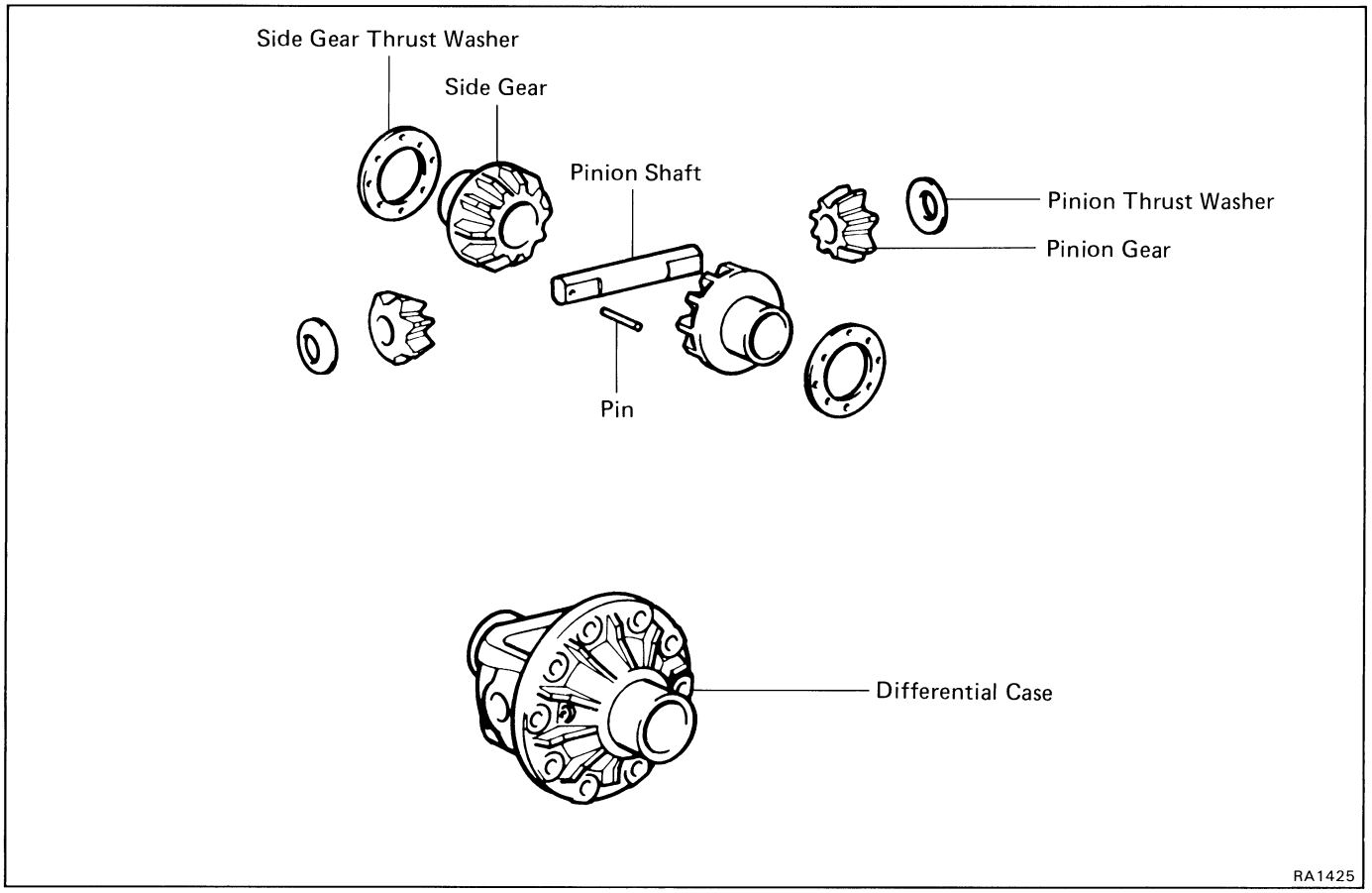

DISASSEMBLY OF DIFFERENTIAL CASE

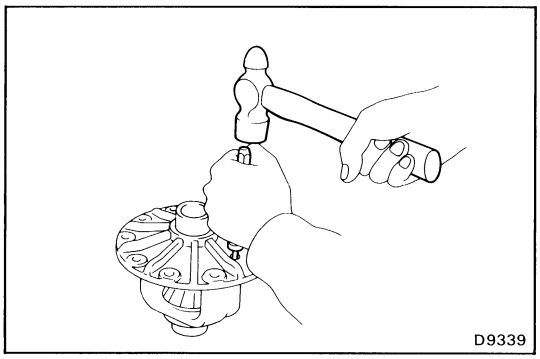

1. **DISASSEMBLE DIFFERENTIAL CASE**
   (a) Using a hammer and punch, drive out the straight pin.

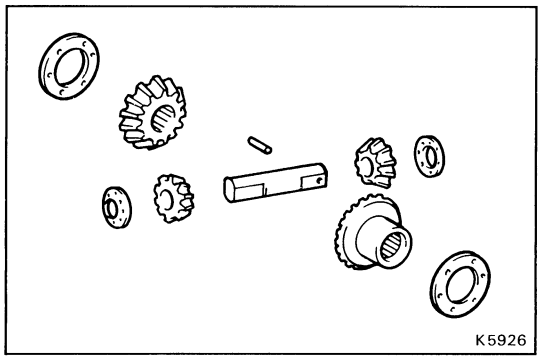

   (b) Remove the pinion shaft, two pinion gears, two side gears and two thrust washers.

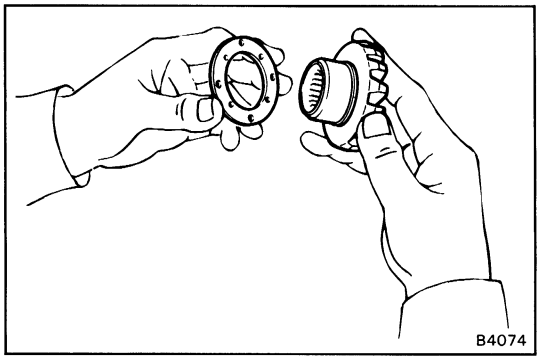

ASSEMBLY OF DIFFERENTIAL CASE

1. ASSEMBLE DIFFERENTIAL CASE

(a) Install the proper thrust washers to the side gears.

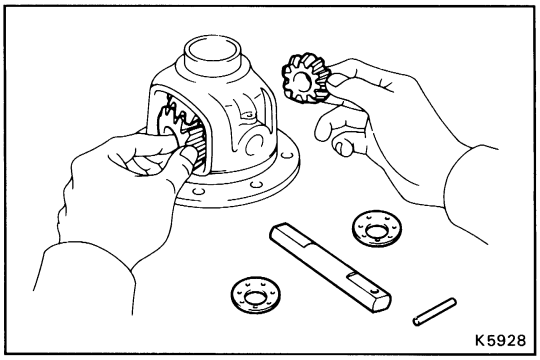

(b) Assemble the side gear, pinion gear, pinion shaft and pinion thrust washer into the differential case.

HINT: Align the hole of the pinion shaft and case.

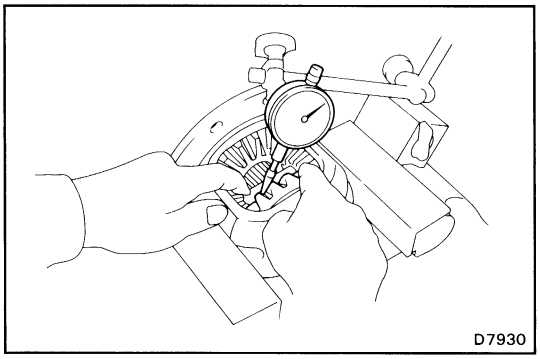

(c) Measure the side gear backlash while holding one pinion gear toward the case.

Standard backlash: 0.05 — 0.20 mm (0.0020 — 0.0079 in.)

If the backlash is not within specification, install a thrust washer of different thickness.

(d) Using the table below, select thrust washers which will ensure that the backlash is within specification. Try to select washers of the same size for both sides.

Thrust washer thickness mm (in.)
1.58 — 1.62 (0.062 — 0.064)
1.68 — 1.72 (0.066 — 0.068)
1.78 — 1.82 (0.070 — 0.072)

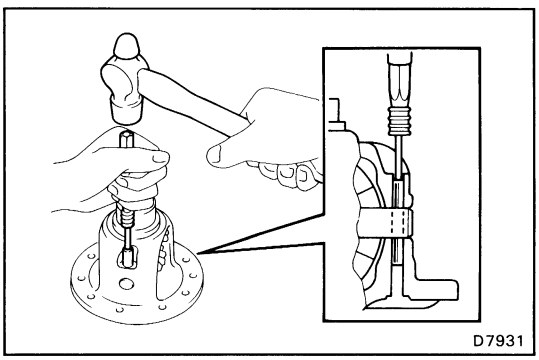

(e) Using a hammer and punch, install the straight pin through the case and hole of the pinion shaft.

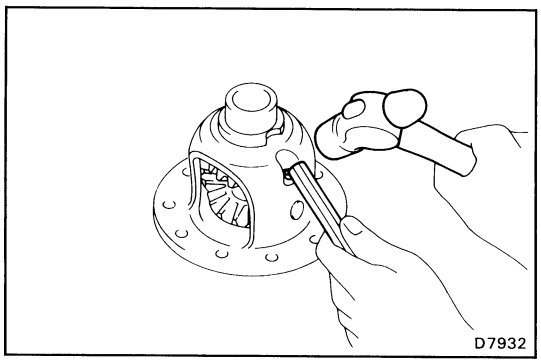

(f) Stake the differential case.

Differential Case (Conventional 4 Pinion Type Differential)

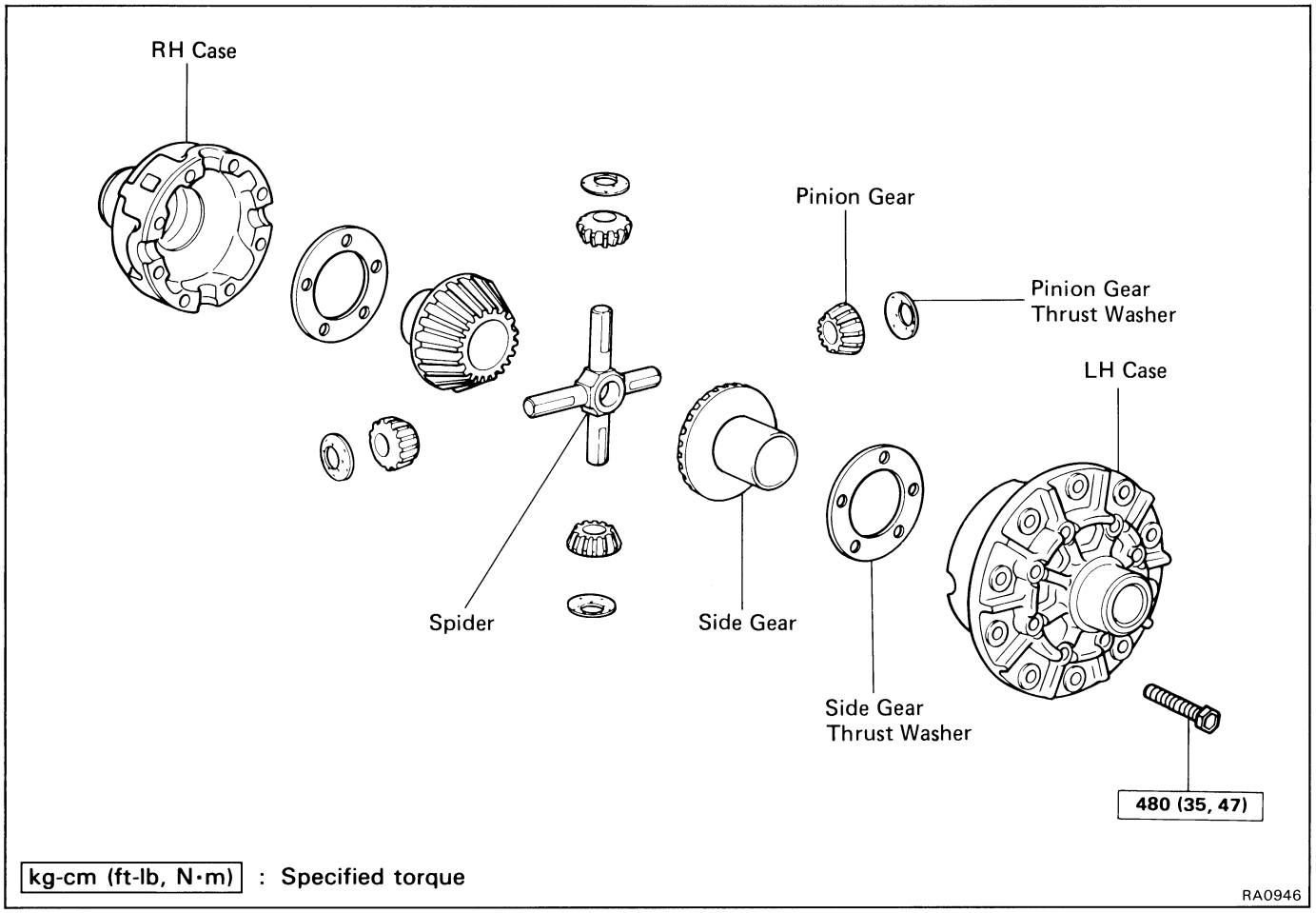

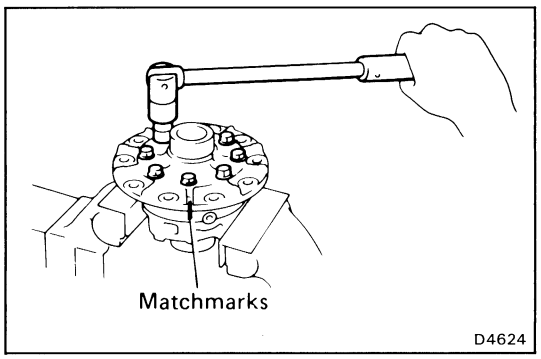

DISASSEMBLY OF DIFFERENTIAL CASE

1. **DISASSEMBLE DIFFERENTIAL CASE**
   (a) Place the matchmarks on the LH and RH cases.
   (b) Remove the eight bolts.

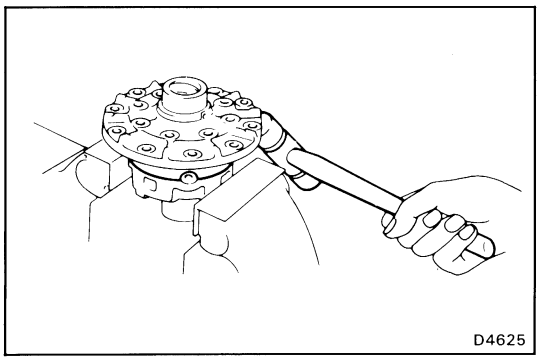

   (c) Using a plastic hammer, separate the LH and RH cases.

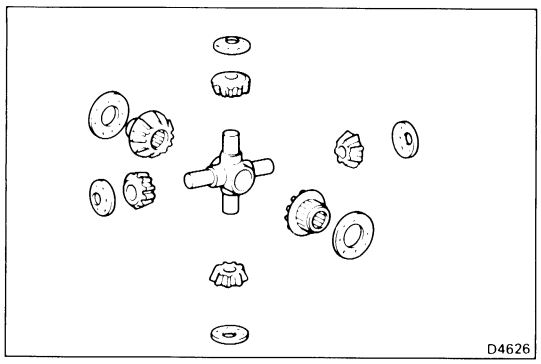

2. **REMOVE FOLLOWING PARTS FROM CASE:**
   - Two side gears
   - Two side gear thrust washers
   - Spider
   - Four pinion gears
   - Four pinion gear thrust washers

ASSEMBLY OF DIFFERENTIAL CASE

1. **MEASURE SIDE GEAR BACKLASH**

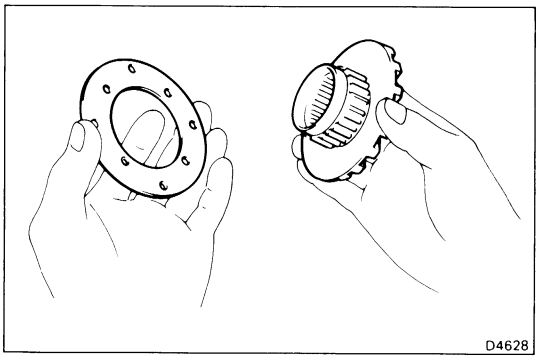

(a) Install the thrust washer to the side gear.

(b) Install the side gear to the RH case.

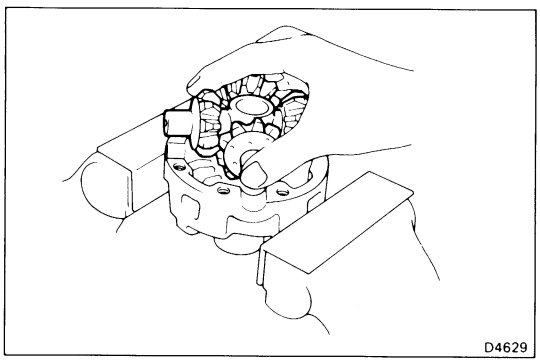

(c) Install the four pinion gears and thrust washers to the spider.

(d) Install the pinion gear and spider to the RH case.

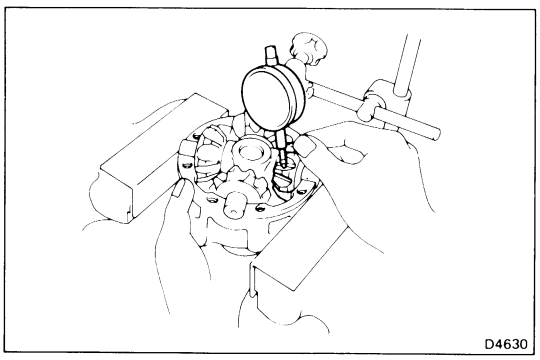

(e) Hold the side gear, measure the side gear backlash.

Backlash: 0.05 – 0.20 mm (0.0020 – 0.0079 in.)

HINT: Measure the backlash at the RH case and at the LH case.

(f) If the backlash is not within specification, install a thrust washer of a different thickness.

HINT: Use washer of the same thickness on both the right and left sides.

Thickness mm (in.)			
0.9	(0.035)	1.2	(0.047)
1.0	(0.039)	1.3	(0.051)
1.1	(0.043)		

2. ASSEMBLE DIFFERENTIAL CASE

(a) Install the side gear and thrust washer to the RH case.

(b) Install the pinion gears and spider to the RH case.

(c) Install the side gear and thrust washer to the LH case.

(d) Apply gear oil to the each parts.

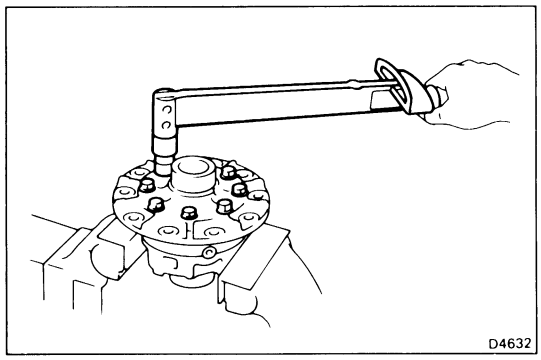

(e) Align the matchmarks on the LH and RH cases.

(f) Torque the eight bolts.

Torque: 480 kg-cm (35 ft-lb, 47 N·m)

Differential Case (Limited Slip Differential)

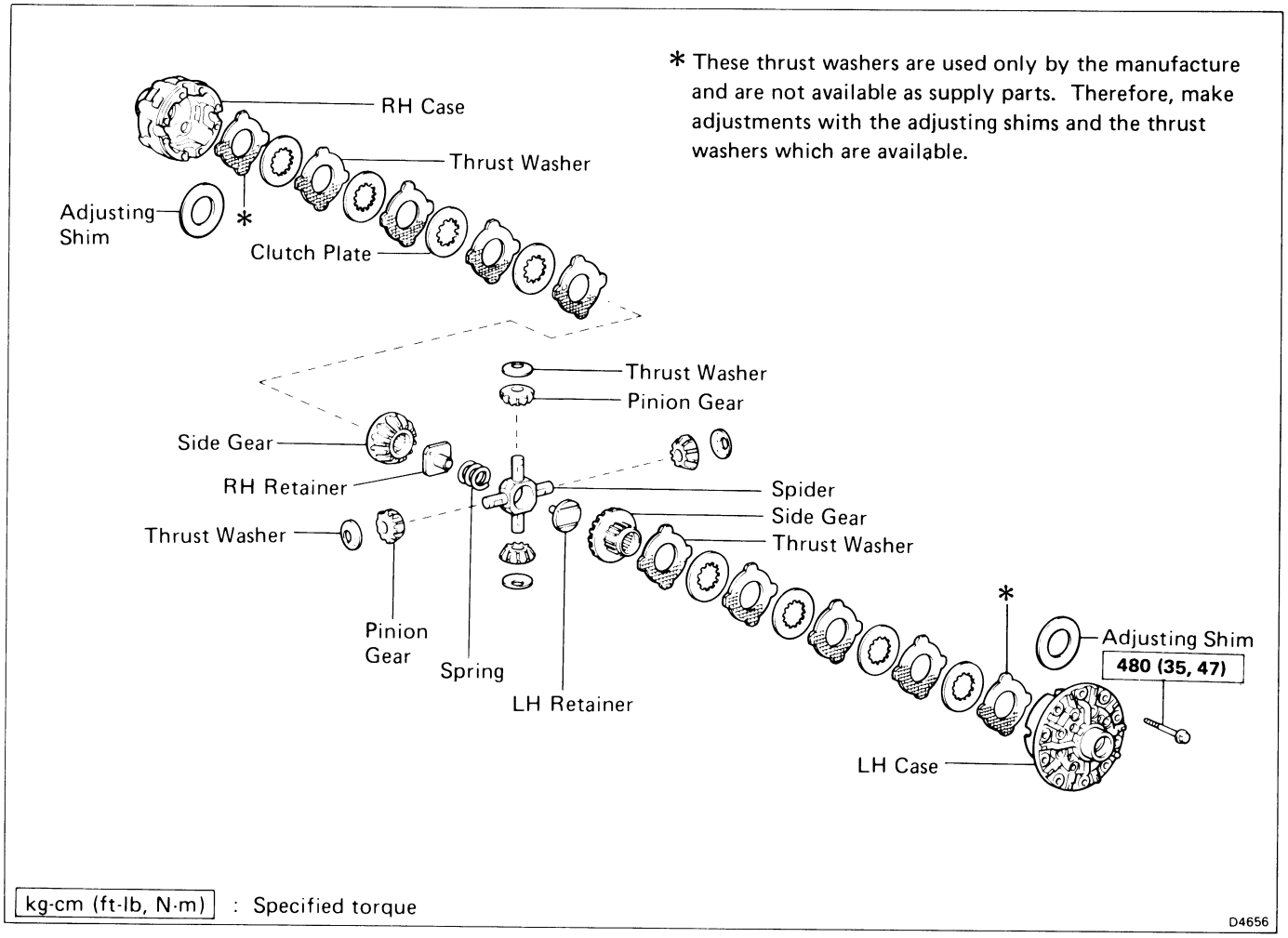

* These thrust washers are used only by the manufacture and are not available as supply parts. Therefore, make adjustments with the adjusting shims and the thrust washers which are available.

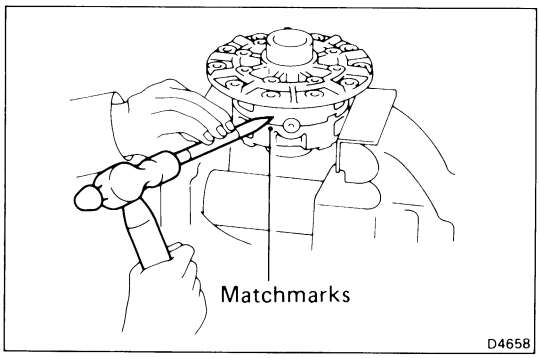

DISASSEMBLY OF LIMITED SLIP DIFFERENTIAL

1. PLACE MATCHMARKS ON RH AND LH CASES

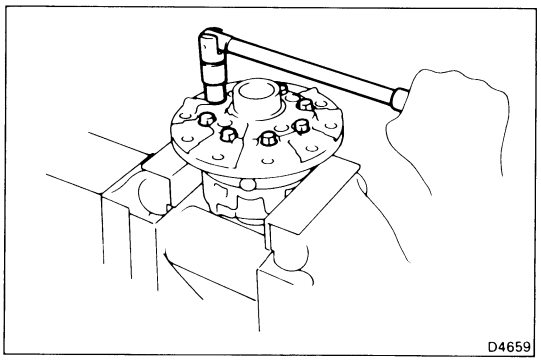

2. REMOVE CASE BOLTS AND LH CASE WITH GEAR

Remove the bolts uniformly and a little at a time.

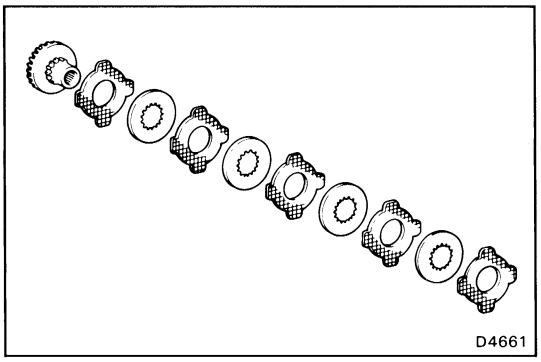

3. **REMOVE FOLLOWING PARTS FROM LH CASE:**
   (a) Side gear
   (b) Side gear thrust washer (5 pieces)
   (c) Clutch plate (4 pieces)
   HINT: Keep the disassembled parts in order.

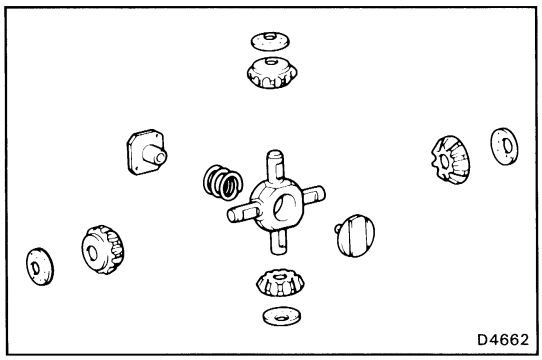

4. **REMOVE FOLLOWING PARTS FROM RH CASE:**
   (a) Spring LH retainer and two spring
   (b) Spider with pinion gear
   (c) Spring RH retainer
   (d) Side gear
   (e) Side gear thrust washer (5 pieces)
   (f) Clutch plate (4 pieces)
   HINT: Keep the disassembled parts in order.

INSPECTION OF COMPONENTS

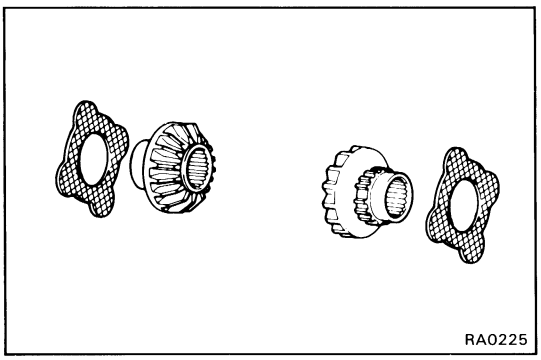

1. **REPLACE PARTS THAT ARE DAMAGED OR WORN**
   HINT: If replacing the side gear, also replace the thrust washer making contact with it.

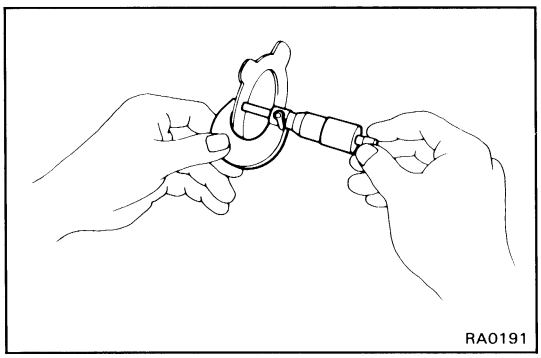

2. **INSPECT THRUST WASHERS FOR WEAR OR DAMAGE**
   Check that the contact surface of the thrust washer is even and that no bare metal is showing.
   Thickness limit (reference): 1.74 mm (0.0685 in.)
   If necessary, replace the thrust washers.
   HINT: If replacing the thrust washer, also replace the clutch plate making contact with it.

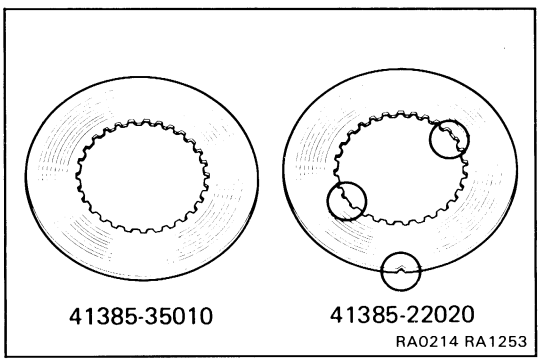

3. **INSPECT CLUTCH PLATE FOR WEAR OR DAMAGED**
   Check see that there is no abnormal wear.
   If necessary, replace the clutch plate.
   HINT: As shown in the illustration, there are two types of clutch plates. The clutch plate in differential will either have a notched portion on its rim or teeth missing at two places on the inner ring (right side), or a cluth plate with no missing teeth or notched portion (left side).
   Therefore, when replacing the clutch plates never mix these two types inside the same differential.

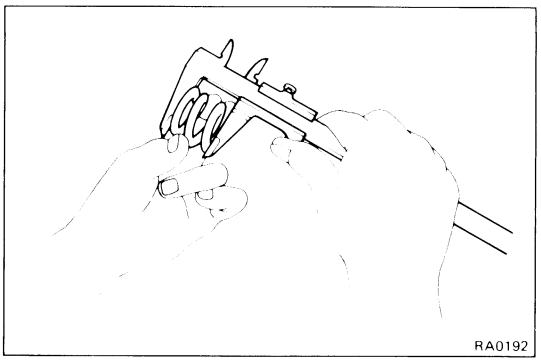

4. **INSPECT SPRING FREE LENGTH**

Measure the free length of the spring.

Limit: 31.3 mm (1.232 in.)

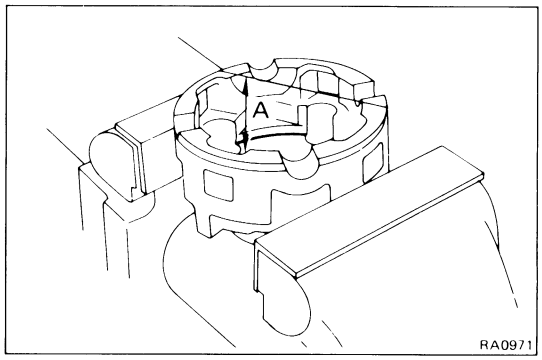

SELECT ADJUSTING SHIM

1. **MEASURE RH CASE**

Measure the RH case as shown in the figure.
"A" = Case dimension.

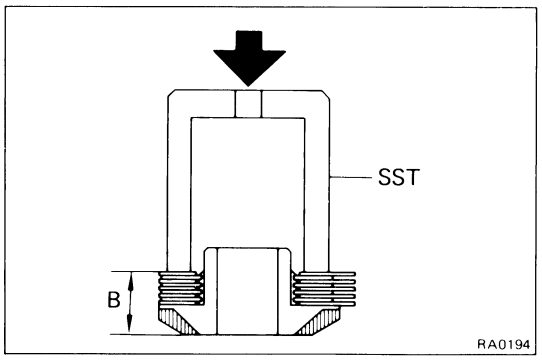

2. **MEASURE SIDE GEAR, THRUST WASHER AND CLUTCH PLATE**

(a) Assemble the side gear, thrust washers and clutch plates on the side gear.

HINT: Do not assemble the adjusting shims.

(b) Using SST to press down the thrust washers and clutch plates with about 10 kg (22 lb) of pressure, measure dimension "B".

SST 09726-35010

Total shim thickness C:
"C" = "A" − "B" − 16.15 mm (0.6358 in.)

(c) Refering to the section table on the next page select the proper adjusting shims.

HINT: The thrust washer attached to the outside of the side gear is marked from A to M according to thickness.

This part is used only during assembly at the factory and therefore is neither a supply part, nor does it have a part number.

During repair, install the selected adjusting shim (marked A through E) between the outermost thrust washer and case.

Adjusting shim sizes mm (in.)

Mark	Thickness	Mark	Thickness
A	0.15 (0.0059)	D	0.30 (0.0118)
B	0.20 (0.0079)	E	0.35 (0.0138)
C	0.25 (0.0098)		

Adjusting shim selection table mm (in.)

B Dimension	A Dimension							
	45.00 .00	.01	.02	.03	.04	.05	.06	.07
	(1.7717)	(1.7720)	(1.7724)	(1.7728)	(1.7732)	(1.7736)	(1.7740)	(1.7744)
28.10 (1.1063)							C + C + D	
.12 (1.1071)								
.14 (1.1079)						C + C + C		
.16 (1.1087)								
.18 (1.1094)					E + E			
.20 (1.1102)								
.22 (1.1110)								
.24 (1.1118)					D + E			
.26 (1.1126)								
.28 (1.1134)								
.30 (1.1142)					D + D			
.32 (1.1150)								
.34 (1.1157)					C + D			
.36 (1.1165)								
.38 (1.1173)								
.40 (1.1181)					C + C			
.42 (1.1189)								
.44 (1.1197)					B + C			
.46 (1.1205)								
.48 (1.1213)								
.50 (1.1220)					B + B			
.52 (1.1228)								
.54 (1.1236)					E			
.56 (1.1244)								
.58 (1.1252)								
.60 (1.1260)					D			
.62 (1.1268)								
.64 (1.1276)				C				
.66 (1.1283)								
.68 (1.1291)			B					
.70 (1.1299)	A							

3. SELECT ADJUSTING SHIMS FOR LH CASE IN SAME PROCEDURE

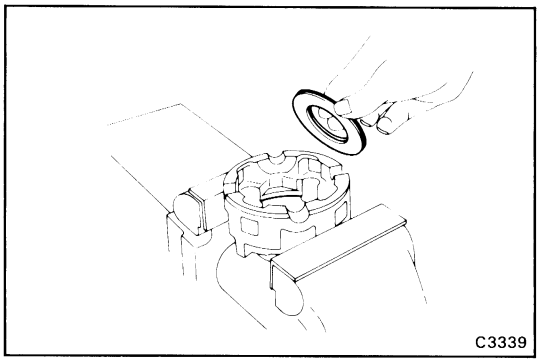

ASSEMBLY OF DIFFERENTIAL CASE

(See page RA-23)

HINT: Apply LSD oil to each component.

1. ASSEMBLE RH CASE

(a) If necessary, install the adjusting shims.

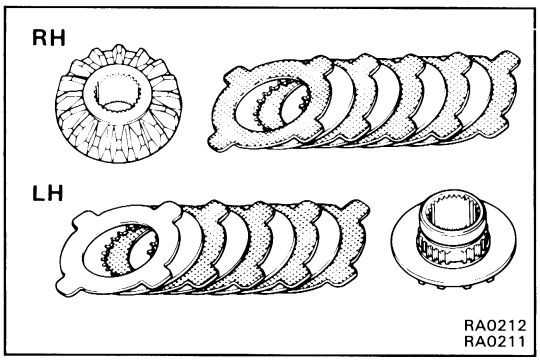

(b) Install the thrust washer , clutch plate as shown in the figure.

HINT: Install the thrust washer without the oil groove on the outermost side and so that it makes contact with the side of case which has no oil groove.

(c) Install the side gear.

2. ASSEMBLE LH CASE IN SAME PROCEDURE

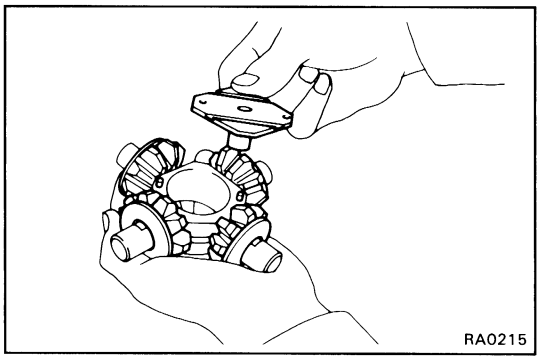

3. INSTALL PINION WASHER AND RH RETAINER TO SPIDER

(a) Install the pinion gear and washer.

(b) Align the RH retainer hole with the spider knock pin and install.

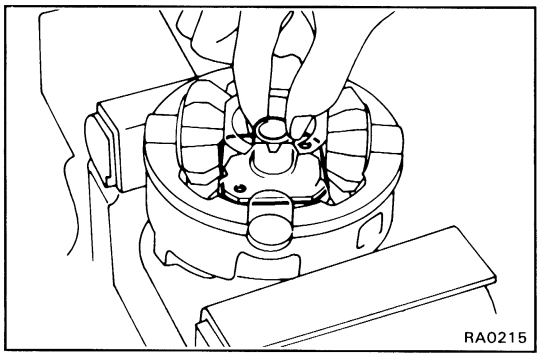

4. INSTALL SPIDER, PINION AND RH RETAINER TO RH CASE

Check that the RH retainer is securely on the spider pin.

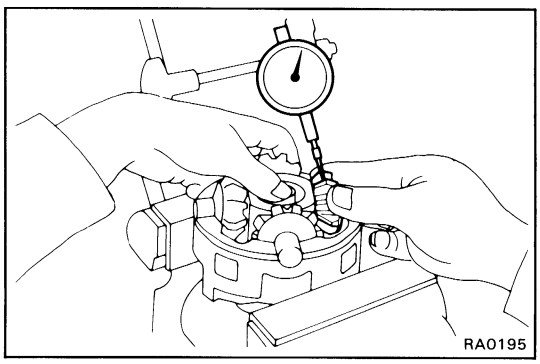

5. MEASURE PINION GEAR BACKLASH

(a) Secure the side gear and measure the backlash while pushing in the spider retainer.

Backlash: 0.05 — 0.20 mm (0.0020 — 0.0079 in.)

HINT: Measure at all four locations.

If the backlash is not within specification, select an adjusting shim.

6. MEASURE LH CASE IN SAME MANNER

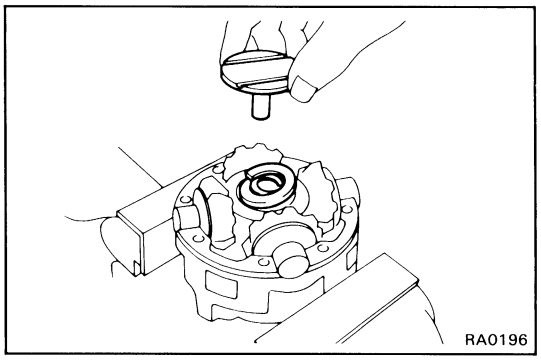

7. INSTALL SPRING AND LH RETAINER

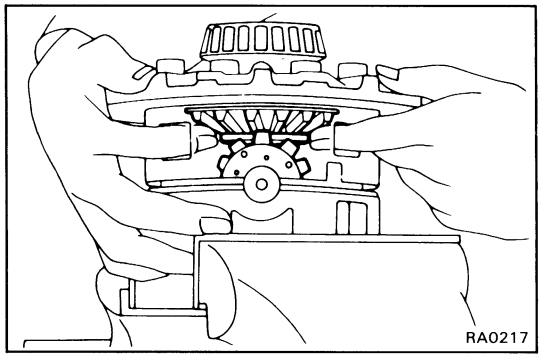

8. ASSEMBLE RH AND LH CASES

Align the marks on RH and LH cases.

HINT: Be careful not to drop the side gear, and check the pinion and side gear alignment.

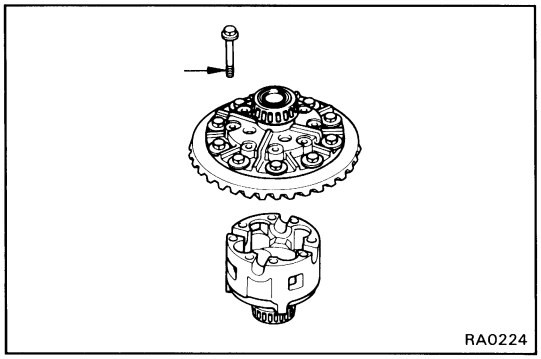

9. INSTALL CASE COVER BOLTS

(a) Apply a small amount of oil to the bolt.

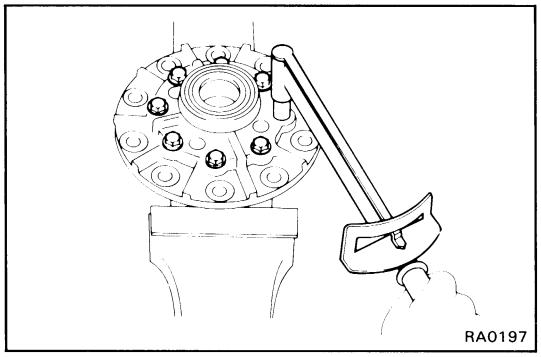

(b) Tighten the bolts uniformly and a little at a time.

Torque: 480 kg-cm (35 ft-lb, 47 N·m)

INSTALLATION OF DIFFERENTIAL

1. INSTALL DIFFERENTIAL CASE IN CARRIER
(See page RA-33)

2. INSTALL DIFFERENTIAL TO BODY
(See page RA-42)

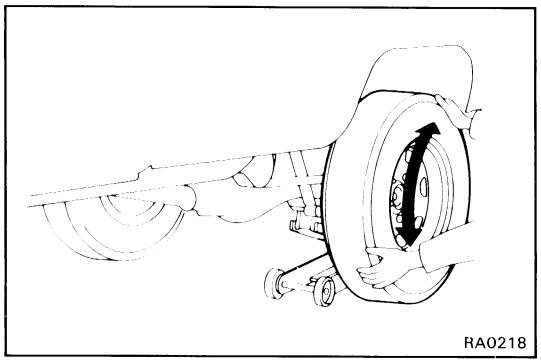

INSPECTION OF DIFFERENTIAL OPERATION

INSPECT DIFFERENTIAL OPERATION

(a) After completing work, block the front wheels and jack up one of the rear wheel.

(b) Rotate the rear wheel 3 — 6 times to break it in.

(c) Check that the wheel turns smoothly.

HINT: If the wheel can not be turned or if it turns with a drag, re-disassemble the differential case and select a different size adjusting shim.

(d) Check the opposite wheel in same procedure.

REAR SUSPENSION

COMPONENT

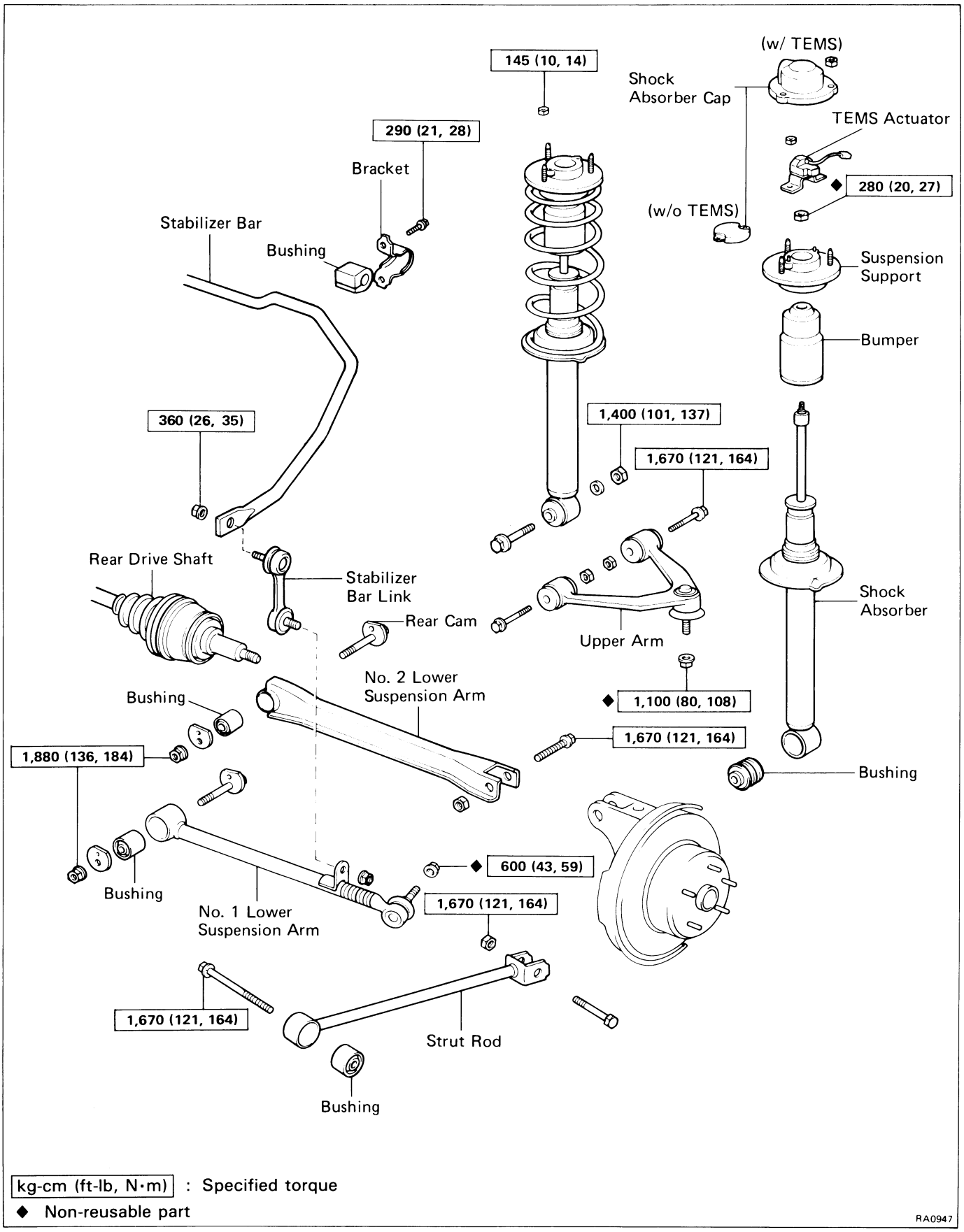

kg-cm (ft-lb, N·m) : Specified torque

◆ Non-reusable part

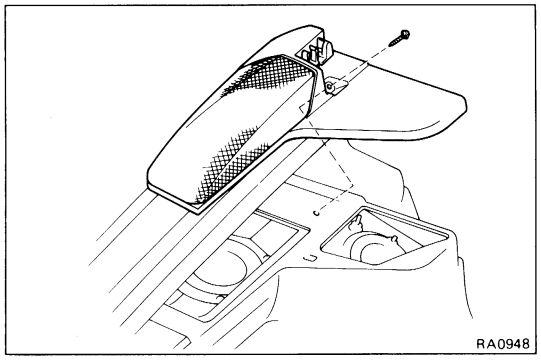

Coil Spring and Shock Absorber

REMOVAL OF COIL SPRING AND SHOCK ABSORBER

1. **JACK UP VEHICLE AND REMOVE WHEEL**
2. **REMOVE SPEAKER GRILLE**
3. **REMOVE QUARTER TRIM (w/ TEMS)**

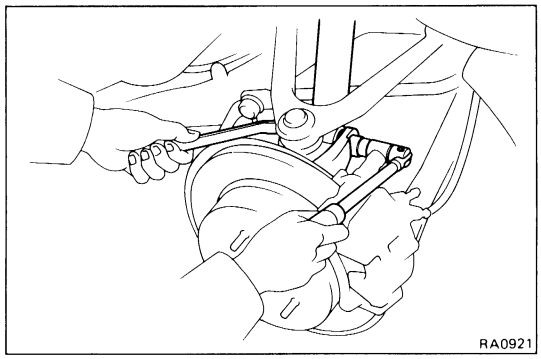

4. **DISCONNECT SHOCK ABSORBER FROM AXLE CARRIER**

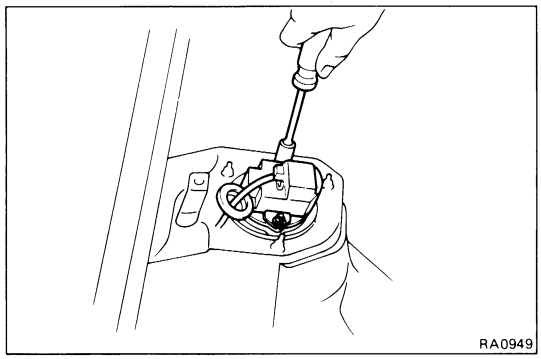

5. **REMOVE SHOCK ABSORBER ASSEMBLY**
   (a) Remove the shock absorber cap.
   (b) Remove the TEMS actuator.

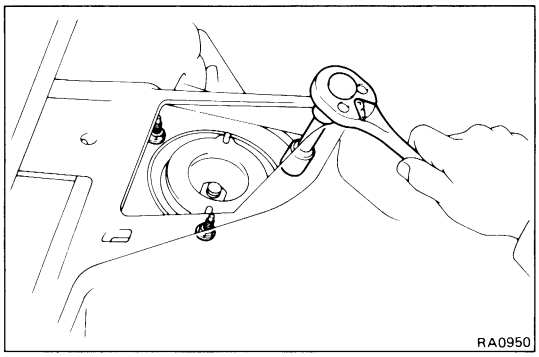

   (c) Remove the three shock absorber mounting nuts from the body and remove the shock absorber assembly.

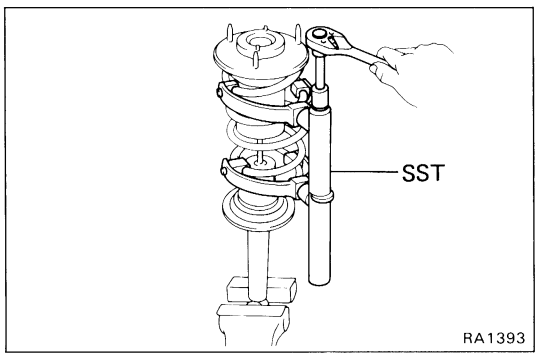

6. **REMOVE COIL SPRING**
   (a) Mount the shock absorber in a vise.
   (b) Using SST, compress the coil spring.
   SST 09727-30020

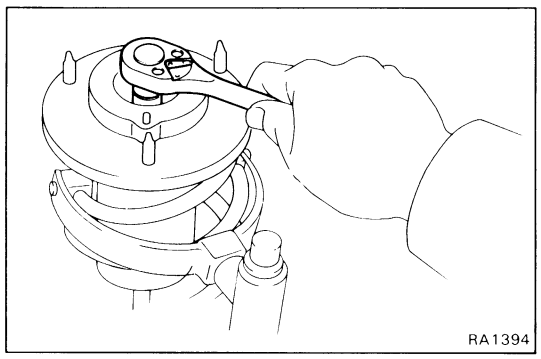

(c) Remove the suspension support nut.

(d) Remove the suspension support, coil spring and bumper.

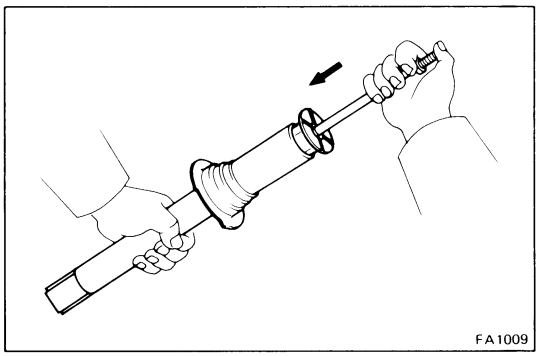

7. INSPECT OPERATION OF SHOCK ABSORBER

(a) While pushing the piston rod, check that the pull throughout the stroke is even, and that there is no abnormal resistance or noise.

(b) Push the piston rod in fully and release it. Check that it return at a constant speed.

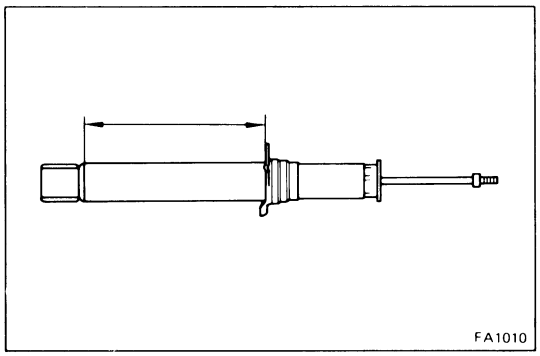

8. DISCARD SHOCK ABSORBER

Before discarding the shock absorber, drill a hole 2 — 3 mm (0.079 — 0.118 in.) in diameter at the location shown in the figure to release the gas inside.

HINT:

- When drilling, chips may fly out, so work carefully.
- The gas is colorless, odorless, and non-poisonous.

REPLACEMENT OF REAR SHOCK ABSORBER BUSHING

REPLACE REAR SHOCK ABSORBER BUSHING

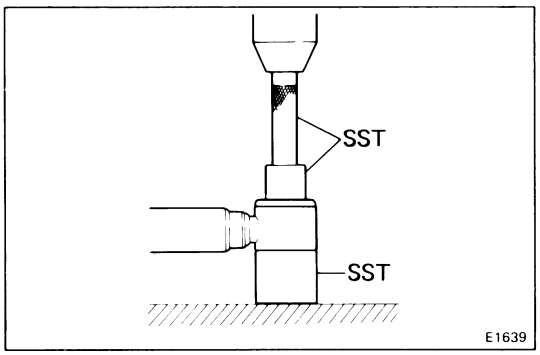

(a) Using SST, press out the rear shock absorber bushing.

SST 09710-22020 (09710-01020, 09710-01060, 09710-01070)

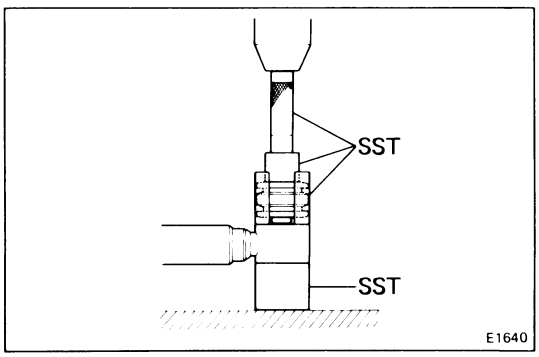

(b) Using SST, press in a new rear shock absorber bushing.

SST 09710-22020 (09710-01020, 09710-01030, 09710-01040, 09710-01050)

INSTALLATION OF REAR SHOCK ABSORBER

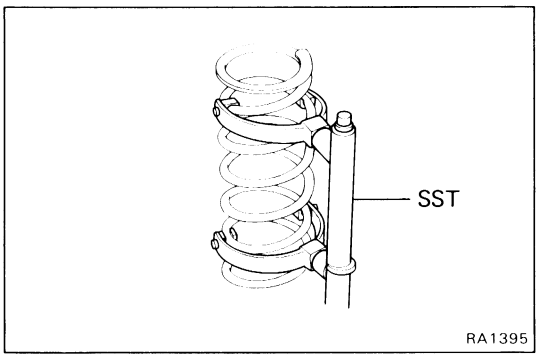

1. INSTALL BUMPER, COIL SPRING AND SUSPENSION SUPPORT

(a) Mount the shock absorber in a vise.

(b) Using SST, compress the coil spring.

SST 09727-30020

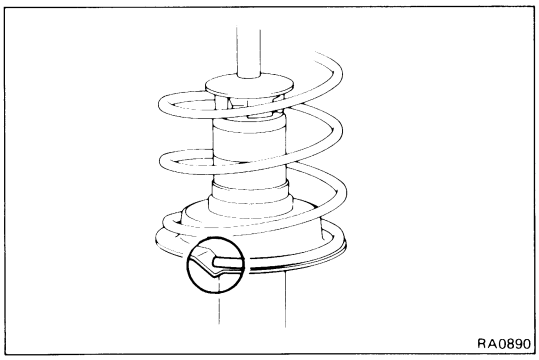

(c) Install the bumper to the shock absorber.

(d) Align the coil spring end with the lower seat hollow and install the coil spring.

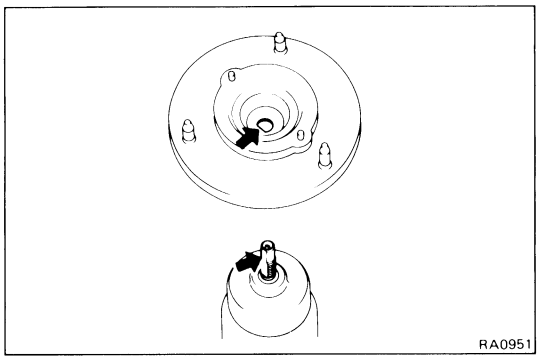

(e) Align the suspension support hole and piston rod and install it.

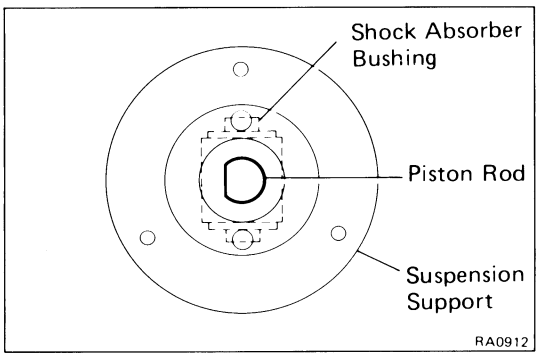

(f) Align the suspension support with the shock absorber lower bushing as shown.

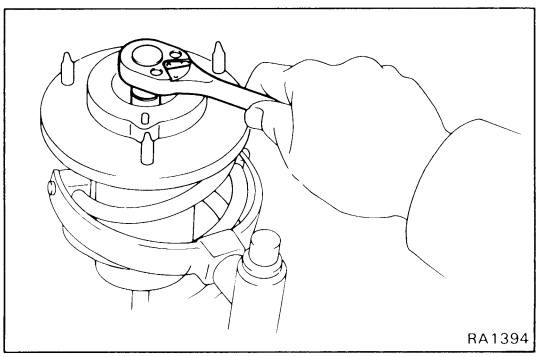

(g) Install the suspension support nut.

Torque: 280 kg-cm (20 ft-lb, 27 N·m)

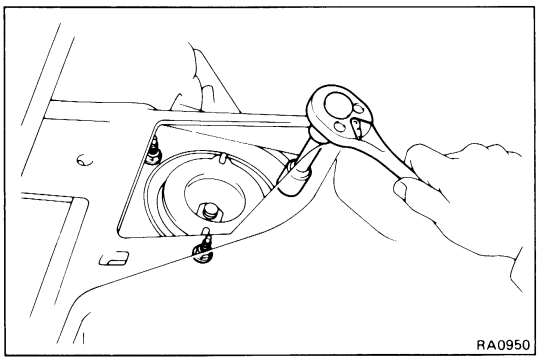

2. **CONNECT SHOCK ABSORBER ASSEMBLY TO BODY**

Connect the shock absorber assembly with the three nuts.

Torque: 145 kg-cm (10 ft-lb, 14 N·m)

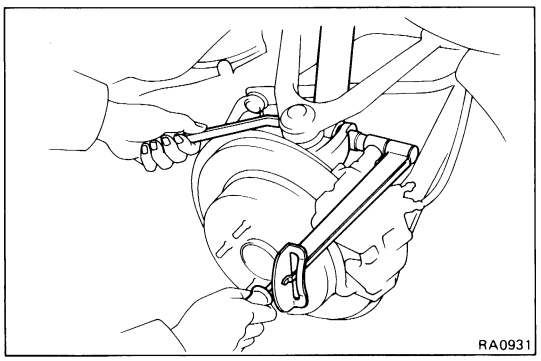

3. **INSTALL SHOCK ABSORBER ASSEMBLY**

(a) Connect the shock absorber assembly to the axle carrier.

Torque: 1,400 kg-cm (101 ft-lb, 137 N·m)

(b) Install the TEMS actuator and shock absorber cap.

4. **INSTALL QUARTER TRIM AND SPEAKER GRILLE**

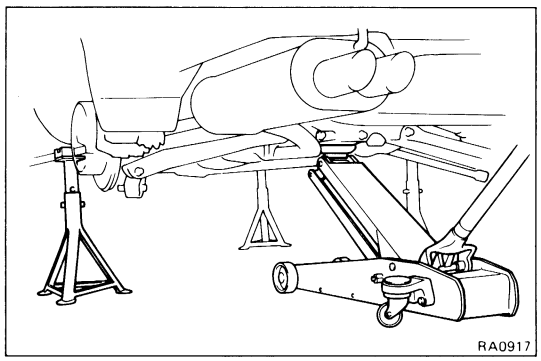

No.1 and No.2 Lower Suspension Arms

(See page RA-56)

REMOVAL OF NO.1 AND NO.2 LOWER SUSPENSION ARMS

1. JACK UP AND SUPPORT VEHICLE

Jack up the vehicle and support the body with stands.

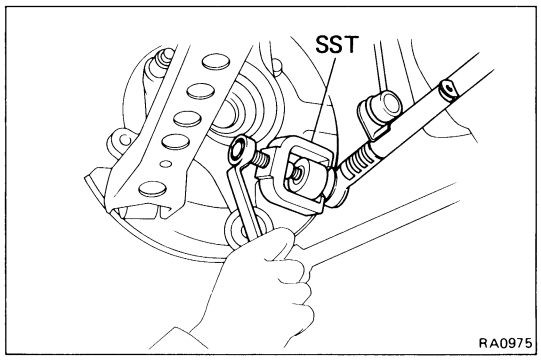

2. REMOVE REAR DRIVE SHAFT
(See page RA-16)

3. REMOVE NO.1 LOWER SUSPENSION ARM

(a) Remove the nut and disconnect the No.1 suspension arm from the axle carrier.

(b) Using SST, disconnect the No.1 suspension arm from the axle carrier.

SST 09611-22012

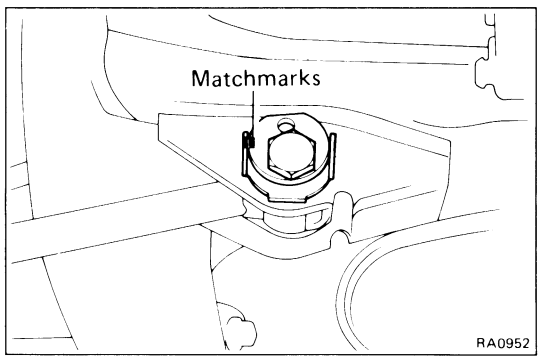

(c) Place the matchmarks to the adjusting cam and body.

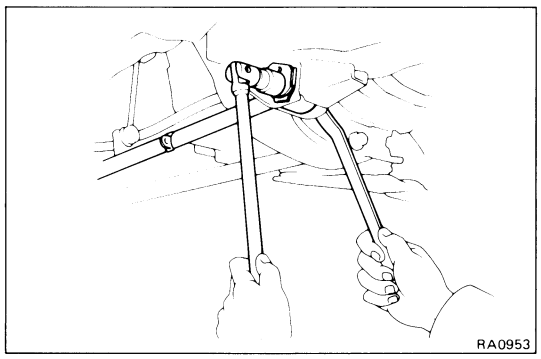

(d) Remove the cam and bolt from the body and remove the No.1 lower suspension arm.

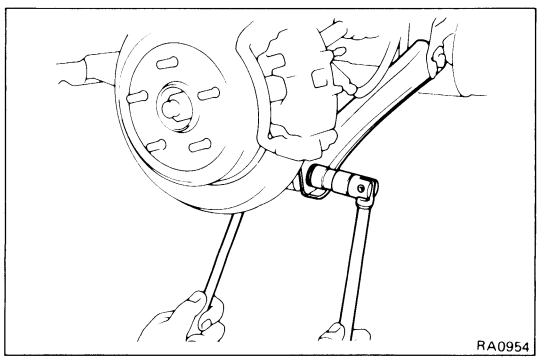

4. REMOVE NO.2 LOWER SUSPENSION ARM

(a) Remove the bolt and nut, disconnect the No.2 lower suspension arm from the axle carrier.

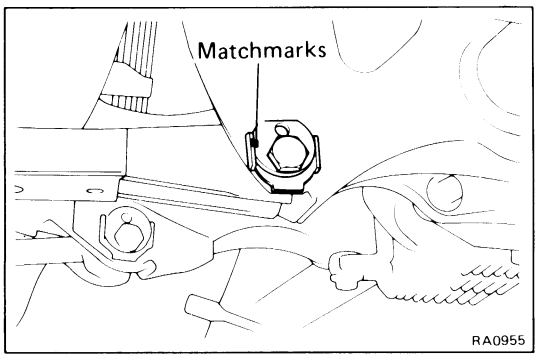

(b) Place the matchmarks to the adjusting cam and body.

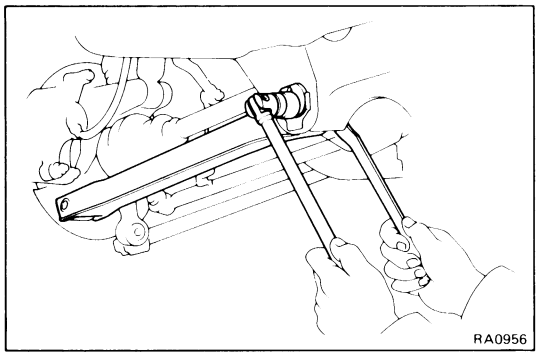

(c) Remove the cam and bolt, and the No.2 lower suspension arm.

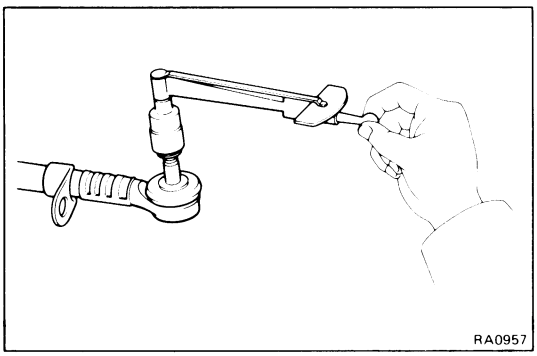

INSPECTION OF NO.1 LOWER SUSPENSION ARM BALL JOINT

INSPECT BALL JOINT FOR ROTATION CONDITION

(a) Flip the ball joint stud back and forth 5 times, before installing the nut.

(b) Using a torque gauge, turn the nut continuously one turn each 2 - 4 seconds and take the torque reading on the fifth turn.

Torque (turning): 8.5 — 35.0 kg-cm (7 — 30 in.-lb, 0.8 — 3.4 N·m)

If not within specification, replace the No.1 suspension arm.

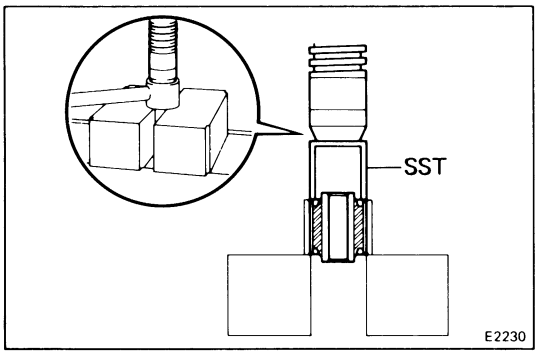

REPLACEMENT OF NO.1 AND NO.2 LOWER ARM BUSHINGS

1. REPLACE NO.1 LOWER SUSPENSION ARM BUSHING

(a) Using SST, press out the No.1 lower suspension arm bushing.

SST 09726-35010

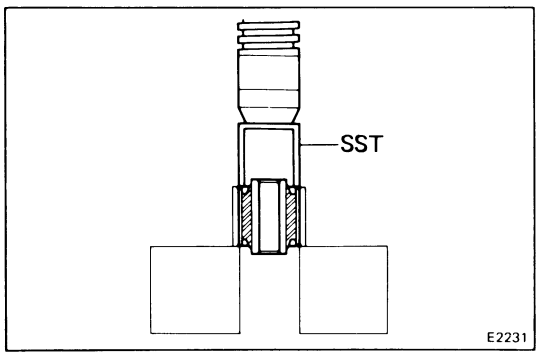

(b) Using SST, press in a new No.1 lower suspension arm bushing

SST 09726-35010

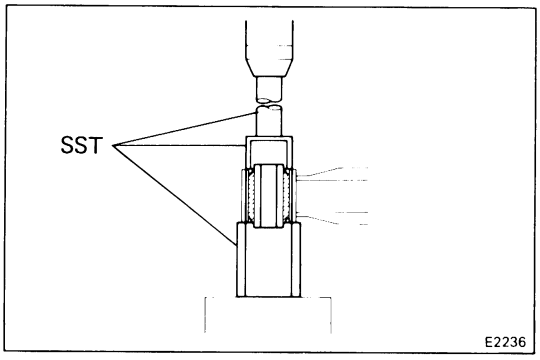

2. **REPLACE NO.2 LOWER SUSPENSION ARM BUSHING**

(a) Using SST, press out the No.2 lower suspension arm bushing.

SST 09710-22041 (09710-02020, 09710-02040, 09710-02050)

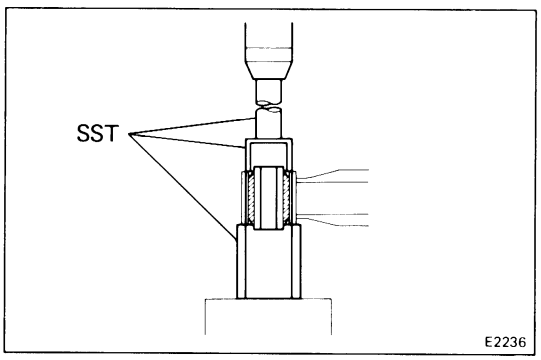

(b) Using SST, press in a new No.2 lower suspension arm bushing.

SST 09710-22041 (09710-02020, 09710-02040, 09710-02050)

INSTALLATION OF NO.1 AND NO.2 LOWER SUSPENSION ARMS

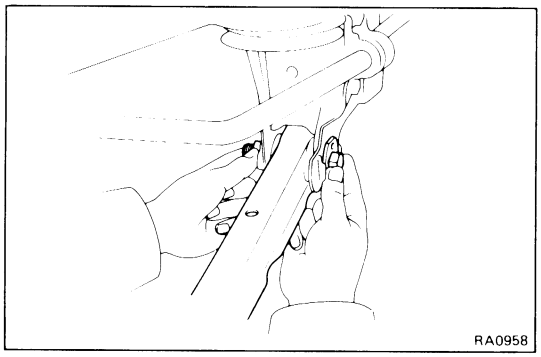

1. **INSTALL NO.2 LOWER SUSPENSION ARM**

(a) Place the No.2 lower suspension arm in position.

(b) Temporarily install the cam and bolt to the body.

(c) Align the matchmarks to the cam and body.

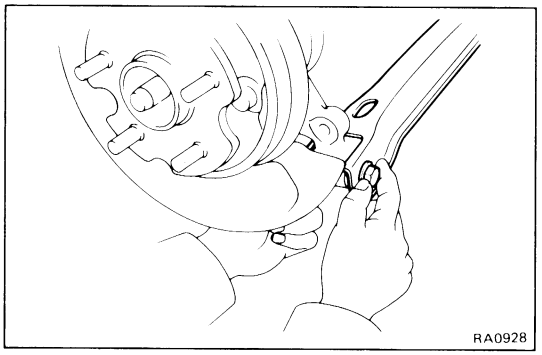

(d) Temporarily install the bolt and nut, connect the No.2 lower suspension arm to the axle carrier.

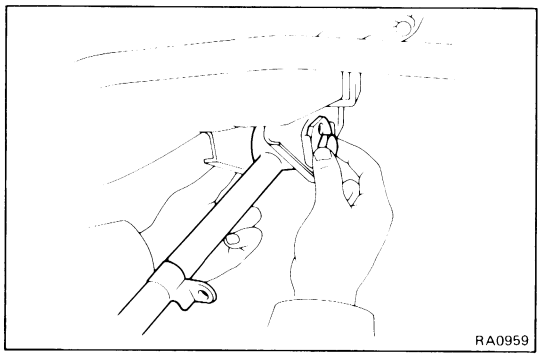

2. **INSTALL NO.1 LOWER SUSPENSION ARM**

(a) Place the No.1 lower suspension arm in position.

(b) Temporarily install the cam and bolt to the body.

(c) Align the matchmarks to the cam and body.

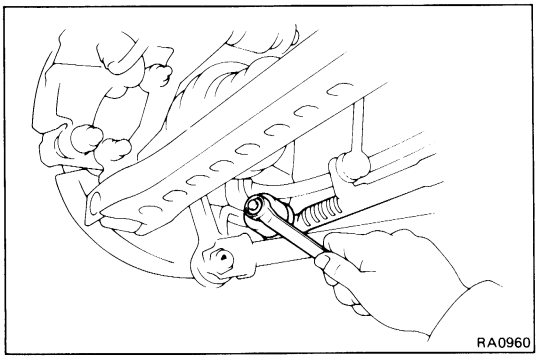

(d) Install a new nut, connect the No.1 lower suspension arm to the axle carrier.

Torque: 600 kg-cm (43 ft-lb, 59 N·m)

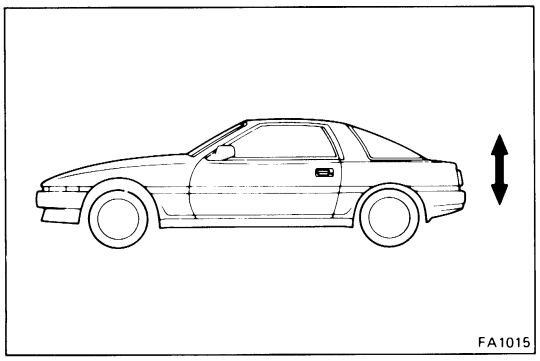

3. INSTALL REAR DRIVE SHAFT (See page RA-21)

4. TORQUE LOWER SUSPENSION ARM MOUNTING BOLTS AND NUTS

(a) Remove the stands and bounce the vehicle to stabilize the suspension.

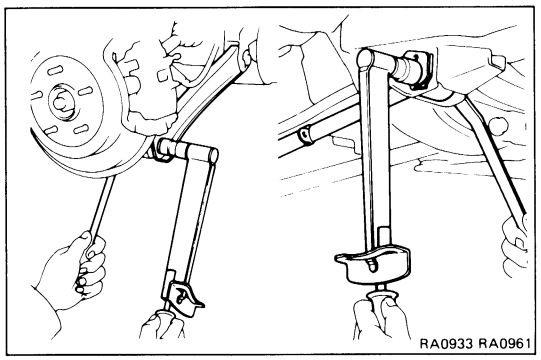

(b) Torque the mounting bolts and nuts with the vehicle weight on the suspension.

Torque:
Body × Suspension arms
1,880 kg-cm (136 ft-lb, 184 N·m)
Axle carrier × No.2 lower suspension arm
1,670 kg-cm (121 ft-lb, 164 N·m)

5. CHECK REAR WHEEL ALIGNMENT (See page RA-3)

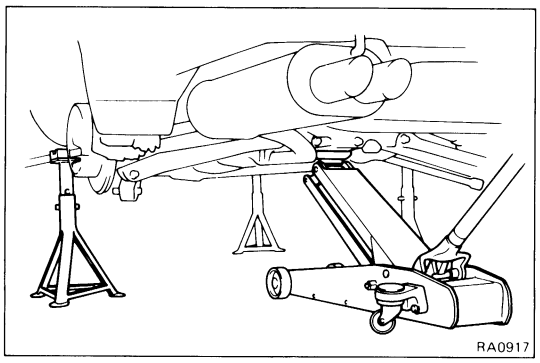

Upper Arm

(See page RA-56)

REMOVAL OF UPPER ARM

1. **JACK UP AND SUPPORT VEHICLE AND REMOVE WHEEL**

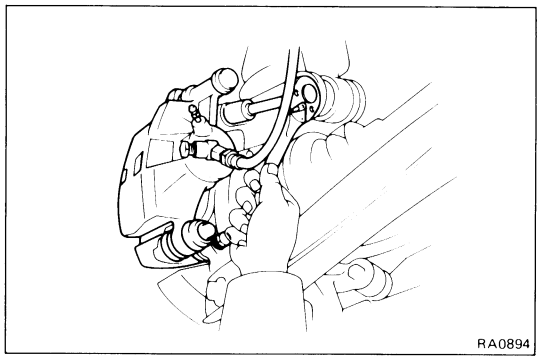

2. **REMOVE BRAKE CALIPER**

   Remove the brake caliper from the axle carrier and suspend it with wire.

3. **REMOVE REAR DRIVE SHAFT**
   (See page RA-16)

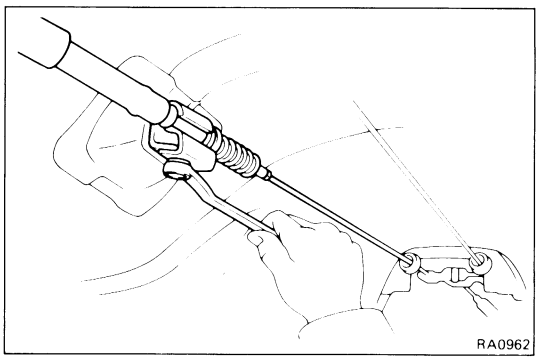

4. **DISCONNECT PARKING BRAKE CABLE**
   (a) Disconnect parking brake cable from the parking brake equalizer.
   (b) Remove the two parking brake cable bracket from body.
   (c) Through out the parking brake cable from the suspension member.

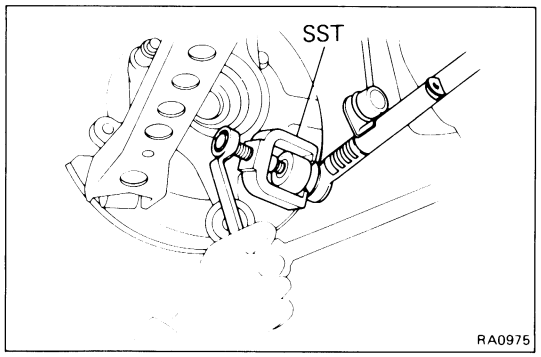

5. **DISCONNECT NO.1 LOWER SUSPENSION ARM FROM AXLE CARRIER**
   (a) Remove the nut.
   (b) Using SST, disconnect the No.1 lower suspension arm from the axle carrier.

   SST 09611-22012

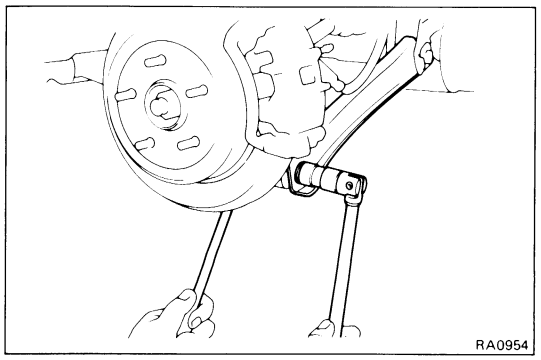

6. **DISCONNECT NO.2 LOWER SUSPENSION ARM FROM AXLE CARRIER**

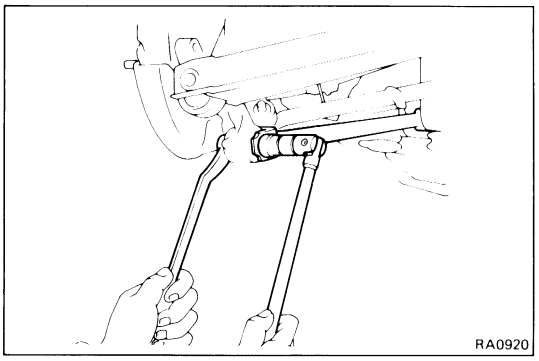

7. DISCONNECT STRUT ROD FROM AXLE CARRIER

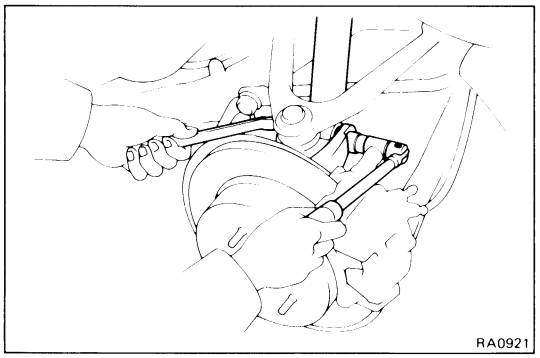

8. DISCONNECT SHOCK ABSORBER FROM AXLE CARRIER

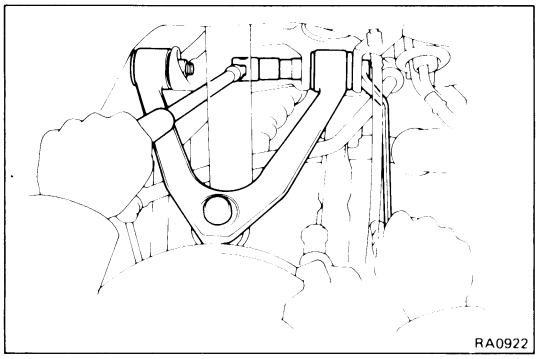

9. DISCONNECT UPPER ARM FROM BODY AND REMOVE AXLE HUB ASSEMBLY

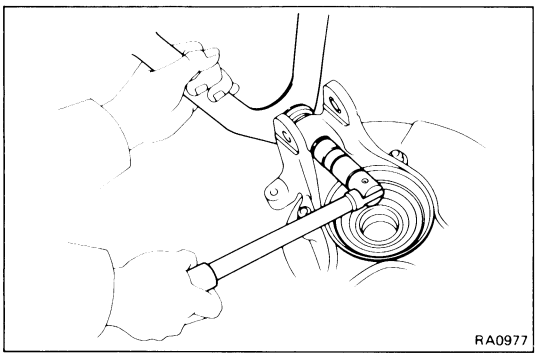

10. REMOVE UPPER ARM FROM AXLE CARRIER

(a) Remove the upper arm mounting nut.

(b) Remove the backing plate mounting nuts and bolts, separate the backing plate and axle carrier.

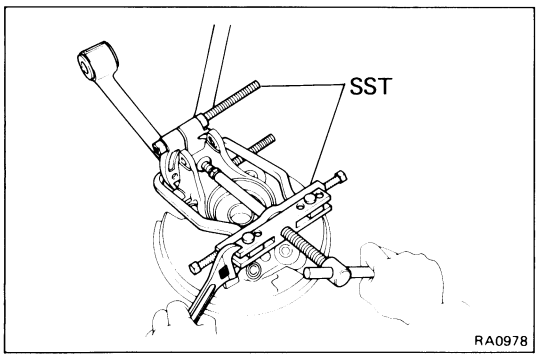

(c) Using SST, remove the upper arm from the axle carrier.

SST 09950-00020, 09950-20017

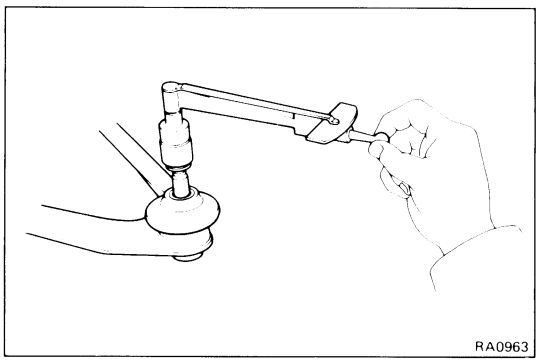

INSPECTION OF UPPER ARM BALL JOINT

INSPECT BALL JOINT FOR ROTATION CONDITION

(a) Flip the ball joint stud back and forth 5 times as shown in the figure, before installing the nut.

(b) Using a torque gauge, turn the nut continuously one turn each 2 - 4 seconds and take the torque reading on the fifth turn.

Torque (turning): 10 — 35 kg-cm (9 — 30 in.-lb, 1.0 — 3.4 N·m)

If not within specification, replace the upper arm.

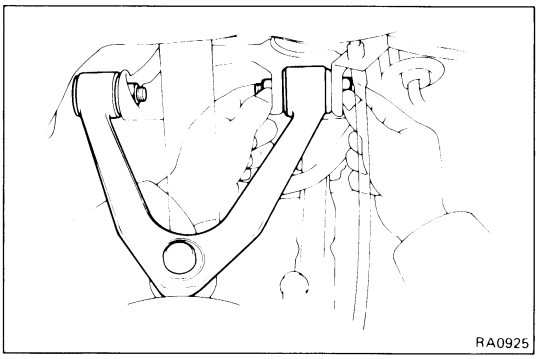

INSTALLATION OF UPPER ARM

1. **TEMPORARILY CONNECT UPPER ARM TO BODY**

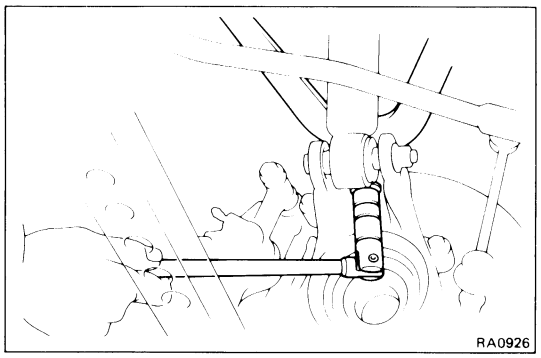

2. **TEMPORARILY CONNECT AXLE HUB ASSEMBLY TO UPPER ARM WITH NEW NUT**

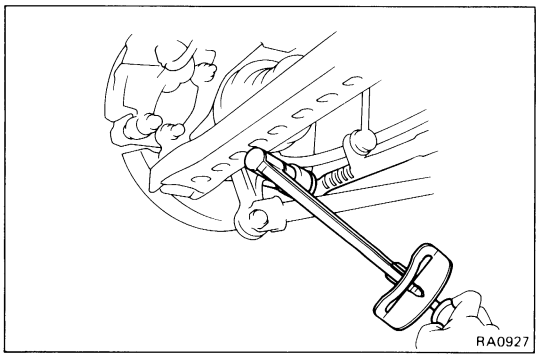

3. **CONNECT NO.1 LOWER SUSPENSION ARM WITH NEW NUT**

   Torque: 600 kg-cm (43 ft-lb, 59 N·m)

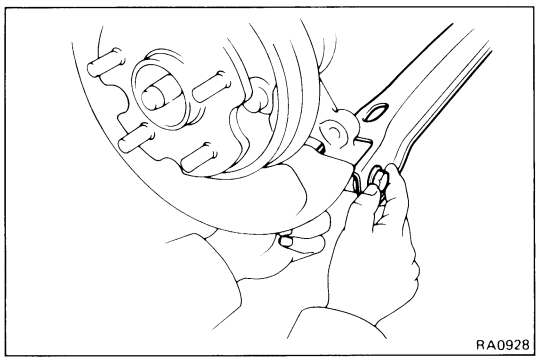

4. **TEMPORARILY CONNECT NO.2 LOWER SUSPENSION ARM**

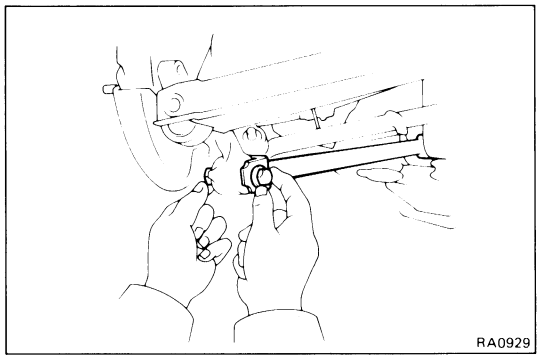

5. **TEMPORARILY CONNECT STRUT ROD**

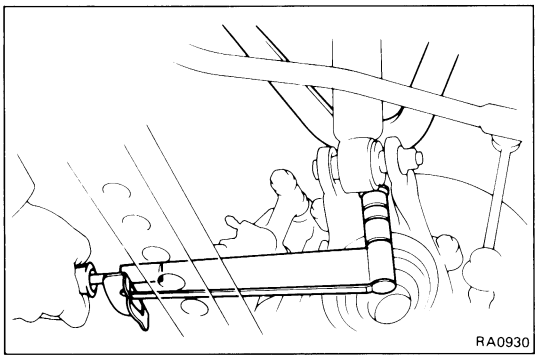

6. **TORQUE UPPER ARM MOUNTING NUT**

   Torque: 1,100 kg-cm (80 ft-lb, 108 N·m)

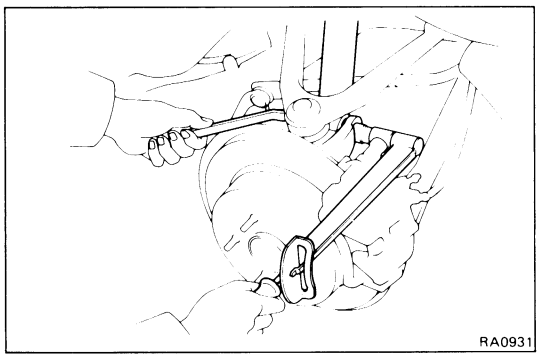

7. **CONNECT SHOCK ABSORBER**

   Torque: 1,400 kg-cm (101 ft-lb, 137 N·m)

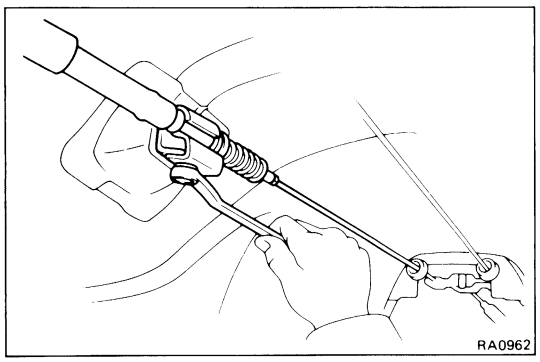

8. **CONNECT PARKING BRAKE CABLE**

   (a) Connect parking brake cable to the parking brake cable equalizer.

   (b) Install the two parking brake cable bracket to the body.

9. **INSTALL REAR DRIVE SHAFT**
   (See page RA-21)

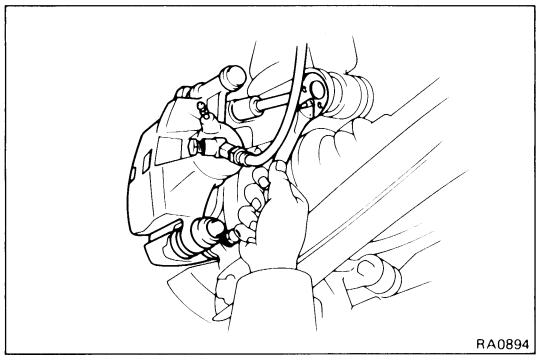

10. INSTALL BRAKE CALIPER

Torque: 475 kg-cm (34 ft-lb, 47 N·m)

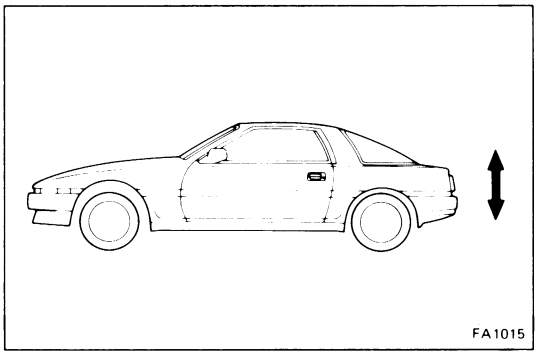

11. TORQUE SUSPENSION PARTS

(a) Install the wheel and remove the stands.

(b) Bounce the vehicle to stabilize the suspension.

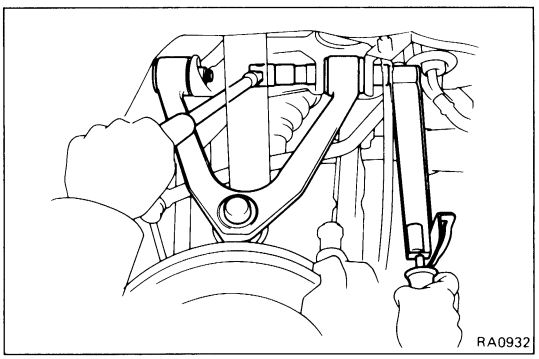

(c) Torque the suspension mounting bolts and nuts with the vehicle weight on the suspension.

Torque:

Upper arm × Body
1,670 kg-cm (121 ft-lb, 164 N·m)

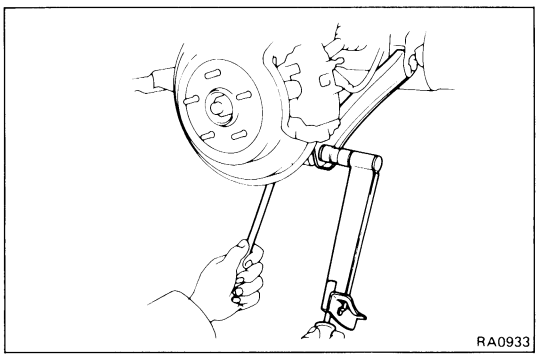

No.2 lower suspension arm × Axle carrier
1,670 kg-cm (121 ft-lb, 164 N·m)

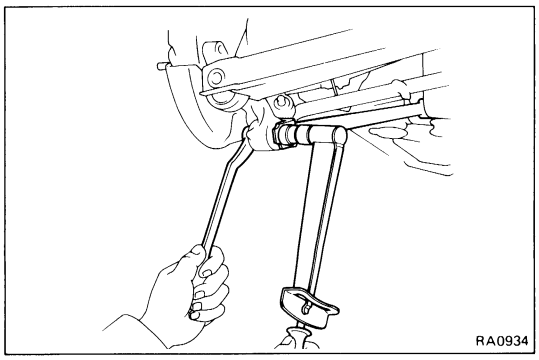

Strut rod × Axle carrier
1,670 kg-cm (121 ft-lb, 164 N·m)

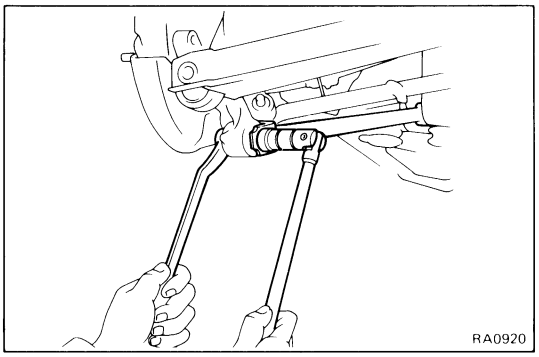

Strut Rod

(See page RA-56)

REMOVAL OF STRUT ROD

1. JACK UP VEHICLE

2. REMOVE STRUT ROD

(a) Remove the strut rod mounting bolt and nut, disconnect the strut rod from the axle carrier.

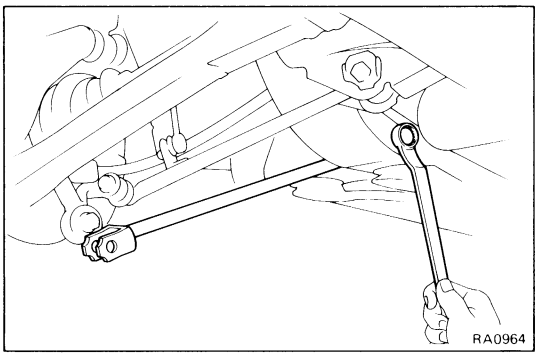

(b) Remove the strut rod mounting bolt, remove the strut rod from the body.

REPLACEMENT OF STRUT ROD BUSHING

REPLACE STRUT ROD BUSHING

(a) Using SST, press out the strut rod bushing.

SST 09726-35010

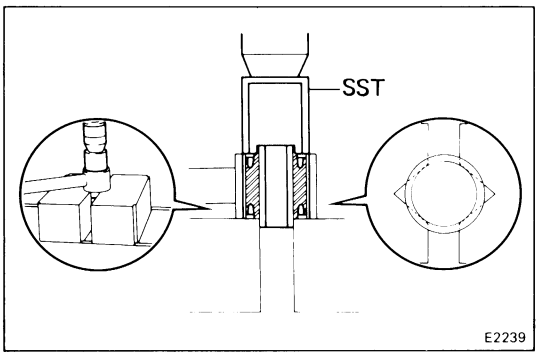

(b) Using SST, press in a new strut rod bushing.

SST 09726-35010

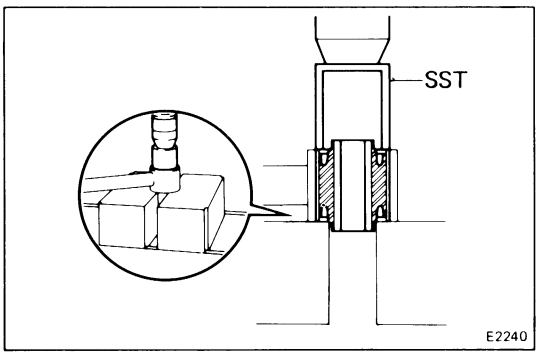

INSTALLATION OF STRUT ROD

1. INSTALL STRUT ROD

(a) Position the strut rod to the body and temporarily install the bolt.

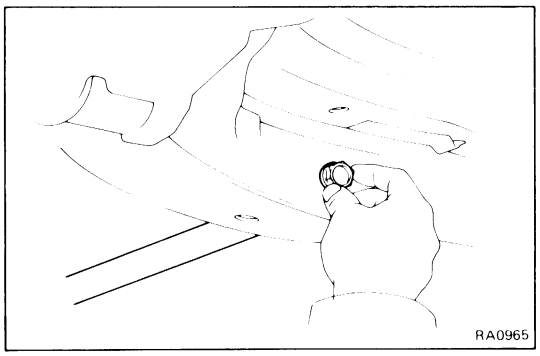

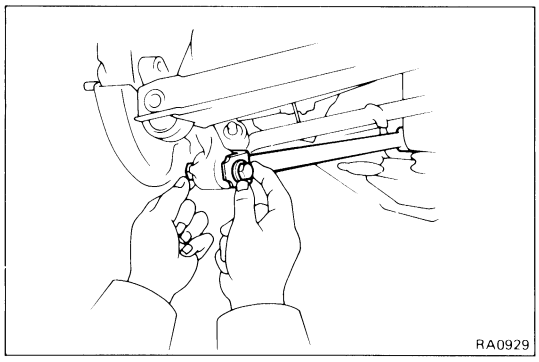

(b) Temporarily connect the strut rod with the bolt and nut to the axle carrier.

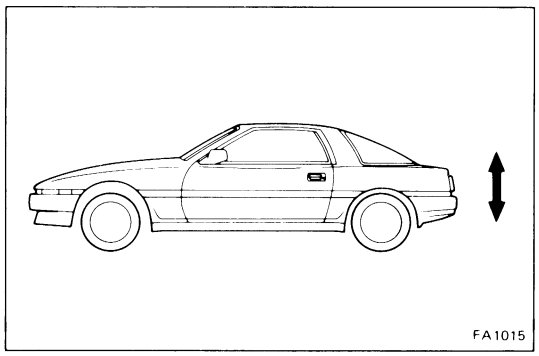

2. **TORQUE STRUT ROD**

(a) Remove the stands and bounce the vehicle to stabilize the suspension.

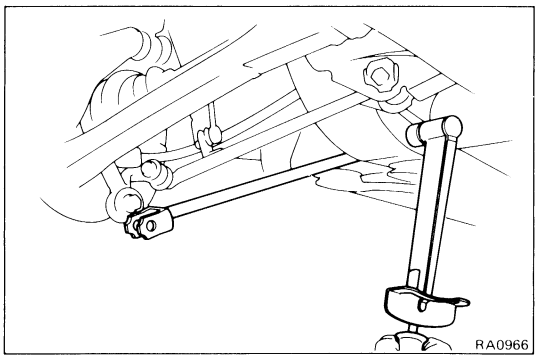

(b) Torque the mounting bolts and nuts.

Torque:
Body × Strut rod
1,670 kg-cm (121 ft-lb, 164 N·m)
Axle carrier × Strut rod
1,670 kg-cm (121 ft-lb, 164 N·m)

3. **CHECK REAR WHEEL ALIGNMENT**
(See page RA-3)

Stabilizer Bar

(See page RA-56)

REMOVAL OF STABILIZER BAR

1. **JACK UP VEHICLE**

2. **REMOVE STABILIZER BAR**

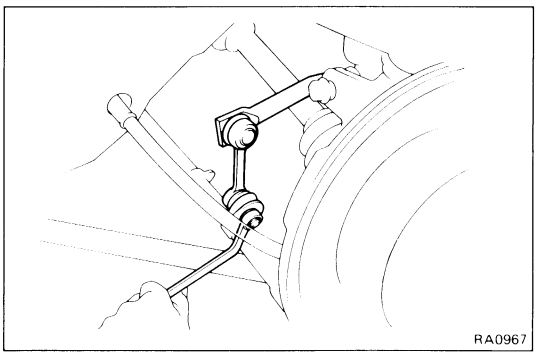

(a) Disconnect the stabilizer bar link from the No.1 lower suspension arm.

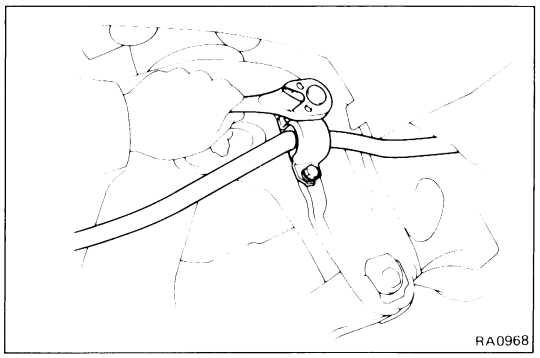

(b) Remove the stabilizer bar bracket and remove the stabilizer bar from the body.

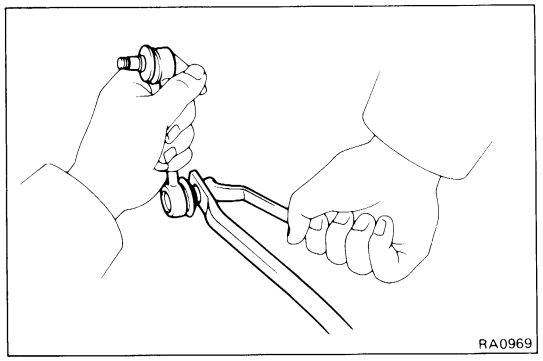

(c) Remove the stabilizer bar link from the stabilizer bar.

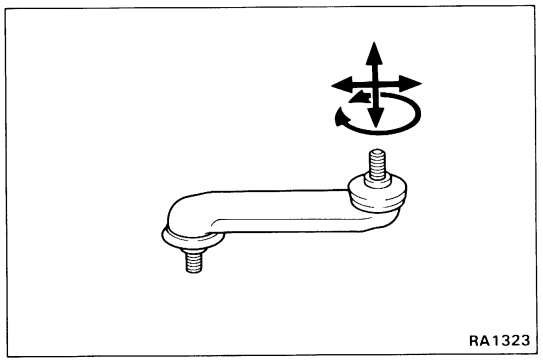

3. INSPECT STABILIZER BAR LINK

Move the ball joint arm in all directions, if the movement is not smooth and free, replace the stabilizer bar link.

INSTALLATION OF STABILIZER BAR

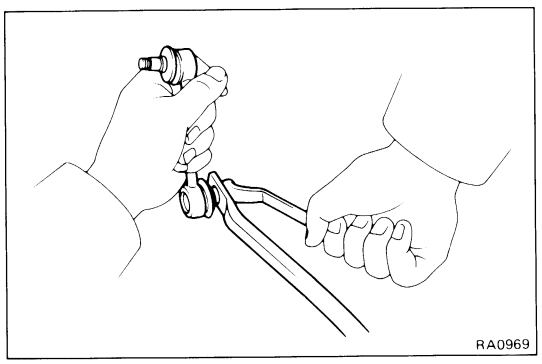

1. INSTALL STABILIZER BAR

(a) Install the stabilizer bar link to the stabilizer bar.

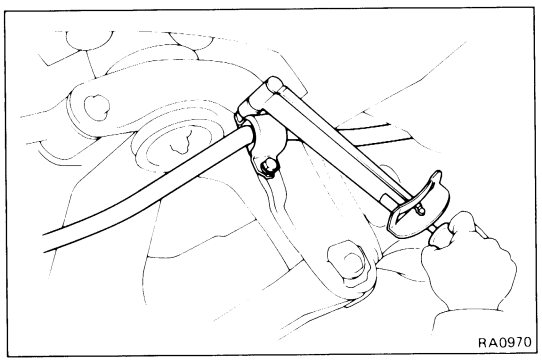

(b) Position the stabilizer bar and install the stabilizer bar bracket to the body.

Torque: 290 kg-cm (21 ft-lb, 28 N·m)

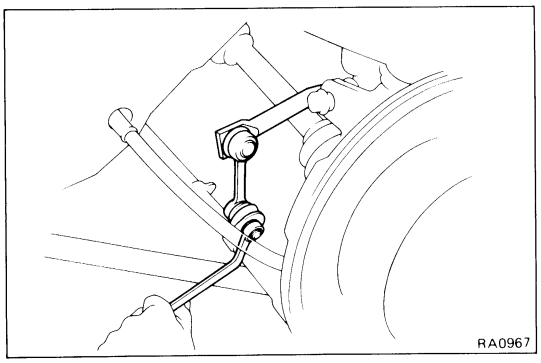

(c) Connect the stabilizer bar link to the No.1 lower suspension arm and torque the nut.

Torque: 360 kg-cm (26 ft-lb, 35 N·m)

2. LOWER VEHICLE

BRAKE SYSTEM

	Page
PRECAUTIONS	BR-2
TROUBLESHOOTING	BR-2
CHECKS AND ADJUSTMENTS	BR-5
MASTER CYLINDER	BR-9
BRAKE BOOSTER	BR-20
FRONT BRAKE	BR-23
REAR BRAKE	BR-31
Disc Brake	BR-31
Parking Brake	BR-39
ANTI-LOCK BRAKE SYSTEM (A.B.S.)	BR-46
Description	BR-46
Diagnosis System	BR-51
Troubleshooting	BR-55
A.B.S. Actuator	BR-61
Control Relay	BR-65
Front Speed Sensor	BR-66
Rear Speed Sensor	BR-68
Anti-lock Brake System Circuit	BR-71

PRECAUTIONS

1. **Care must be taken to replace each part properly as it could affect the performance of the brake system and result in a driving hazard. Replace the parts with parts of the same part number or equivalent.**

2. **It is very important to keep parts and the area clean when repairing the brake system.**

TROUBLESHOOTING

Problem	Possible cause	Remedy	Page
Low or spongy pedal	Brake pads worn	Replace pads	BR-23, 31
	Leak in brake system	Repair leak	
	Master cylinder faulty	Repair or replace master cylinder	BR-9
	Air in brake system	Bleed brake system	BR-6
	Brake cylinder faulty	Repair cylinder	BR-26, 34
	Piston seals worn or damaged	Repair brake cylinder	BR-26, 34
Brakes drag	Parking brake out of adjustment	Adjust parking brake	BR-45
	Binding parking brake wire	Repair as necessary	
	Booster push rod out of adjustment	Adjust push rod	BR-21
	Tension or return spring faulty	Replace spring	BR-39
	Brake line restricted	Repair as necessary	
	Lining cracked or distorted	Replace shoe	BR-39
	Pad cracked or distorted	Replace pad	BR-23, 31
	Caliper piston sticking	Repair as necessary	BR-26, 34
	Master cylinder faulty	Repair or replace master cylinder	BR-9
Brakes pull	Tires improperly inflated	Inflate tires to proper pressure	
	Oil or grease on shoes or pads	Check for cause. Replace shoes or pads	
	Brake shoes distorted, linings worn or glazed	Replace brake shoes	BR-39
	Brake pads distorted, worn or glazed	Replace pads	BR-23, 31
	Disc out of round	Replace disc	BR-26, 39
	Tension or return spring faulty	Replace spring	
	Brake cylinder faulty	Repair cylinder	BR-26, 34
	Piston frozen in brake cylinder	Repair cylinder	BR-26, 34
	Brake pad sticking	Replace pads	BR-23, 31
Hard pedal but brakes inefficient	Oil or grease on shoes or pads	Check for cause. Replace shoes or pads	
	Brake pads distorted, worn or glazed	Replace pads	BR-23, 31
	Piston frozen in brake cylinder	Repair cylinder	BR-26, 34
	Brake booster faulty	Repair booster	BR-20
	Vacuum leaks	Repair as necessary	
	Brake line restricted	Repair as necessary	

TROUBLESHOOTING (Cont'd)

Problem	Possible cause	Remedy	Page
Snapping or clicking noise when brakes are applied	Loose or missing pad support plate	Replace pad support plate	BR-23, 31
	Loose installation bolt	Tighten	BR-23, 31
	Wear on slide bushing	Replace slide bushing	BR-26, 34
Scraping or grinding noise when brakes are applied	Worn brake linings or pads	Replace or refinish rotors if heavily scored	BR-26, 39
	Caliper to wheel or rotor interference	Replace as required	BR-26, 34
	Dust cover to rotor interference	Correct or replace	BR-26, 39
	Other brake system components faulty	Repair or replace as necessary	
	Tires rubbing against chassis and/or body	Repair as necessary	
Squeaking, squealing groaning or chattering noise when brakes are applied Note: Brake friction materials inherently generate noise and heat in order to dissipate energy. As a result, occasional squeal is normal and is aggravated by severe environmental conditions such as cold, heat, wetness, snow, salt, mud, etc. This occasional squeal is not a functional problem and does not indicate any loss of brake effectiveness	Rotors and pads worn or scored	Inspect, repair or replace	BR-26, 34
	Dirty, greased, contaminated or glazed linings or pads	Clean or replace	
	Improper linings or pads using	Inspect for correct usage or replace	
	Mal-adjustment of brake pedal or booster push rod	Inspect and adjust	BR-5, 21
	(Disc brake)		
	Missing or damaged brake pad anti-squeal shim	Replace	BR-23, 31
	Pad wear and pad wear indicator making contact with the rotor	Replace	BR-23, 31
	Burred or rusted calipers	Clean or deburr	BR-26, 34
	(Drum brake)		
	Weak damaged or incorrect shoe hold-down springs, loose or damaged shoe hold-down spring pins and springs and grooved backing plate ledges	Inspect, repair or replace	

TROUBLESHOOTING (Cont'd)

Problem	Possible cause	Remedy	Page
Squealing and squeaking noise when brakes are not applied	Mal-adjustment of brake pedal or booster push rod	Inspect and adjust	BR-5, 21
	Poor return of brake booster or master cylinder	Inspect, repair or replace	BR-9, 20
	(Disc brake)		
	Rusted or stuck piston	Inspect and lubricate as necessary	BR-26, 34
	Improper positioning of pad in caliper		
	Rotor rubbing against caliper housing		
	Improper installation of disc brake pad support plate		BR-23, 31
	Pad wear and pad wear indicator making contact with the rotor	Replace	BR-23, 31
	(Drum brake)		
	Weak, damaged or incorrect shoe hold-down springs		
	Grooved backing plate ledges		
	Bent or warped backing plate causing interference with drum	Repair or replace	
	Improper machining of drum causing interference with backing plate or shoe	Replace drum	
	Other brake system components:	Inspect, repair or replace as necessary	
	Loose or extra parts in brakes		
	Rear drum brake adjustment too tight causing lining to glaze		
	Worn, damaged or insufficiently lubricated wheel bearings		
Groaning, clicking or rattling noise when brakes are not applied	Stones or foreign material trapped inside wheel covers	Remove foreign material	
	Loose wheel nuts	Tighten to correct torque Replace if stud holes are elongated	
	Mal-adjustment of brake pedal or booster push rod	Inspect and adjust	BR-5, 21
	Worn, damaged or dry wheel bearings	Inspect and lubricate or replace	
	(Disc brake)		
	Loose or missing anti-rattle spring or pad support plate or crimping on outer pad	Inspect, repair or replace	BR-23, 31
	Failure of shim	Inspect, replace if necessary	BR-23, 31
	Wear on slide bushing	Inspect, replace if necessary	BR-26, 34
	Loose installation bolt	Inspect, tighten if necessary	BR-26, 34
	Poor return of piston	Inspect, repair or replace	BR-26, 34
	(Drum brake)		
	Loose or extra parts	Inspect and repair	BR-39

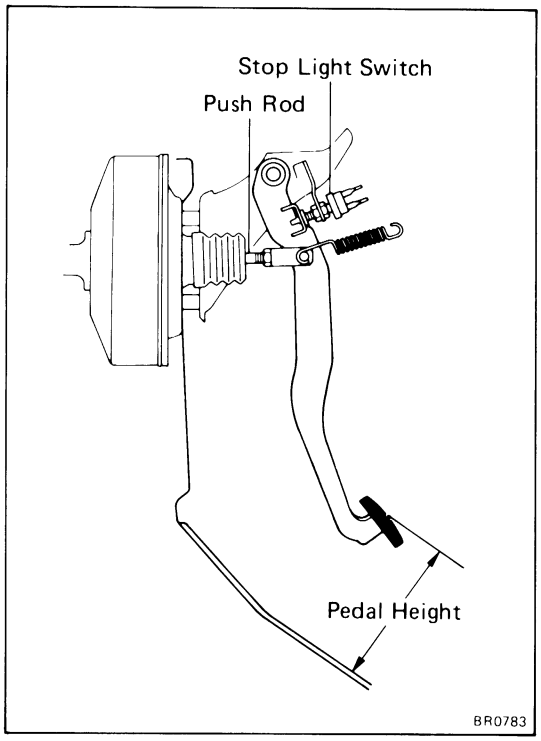

CHECKS AND ADJUSTMENTS

CHECK AND ADJUSTMENT OF BRAKE PEDAL

1. CHECK THAT PEDAL HEIGHT IS CORRECT

Pedal height from asphalt sheet:
151.5 — 161.5 mm (5.96 — 6.36 in.)

If incorrect, adjust the pedal height.

2. IF NECESSARY, ADJUST PEDAL HEIGHT

(a) If necessary, remove the instrument lower finish panel and air duct.

(b) Loosen the stop light switch lock nut.

(c) Sufficiently loosen the stop light switch.

(d) Loosen the push rod lock nut.

(e) Adjust the pedal height by turning the pedal push rod.

(f) Return the stop light switch until it lightly contacts the pedal stopper.

(g) Tighten the two lock nuts.

(h) Check that the stop lights light when the brake pedal depressed.

(i) After adjusting the pedal height, check and adjust the pedal freeplay.

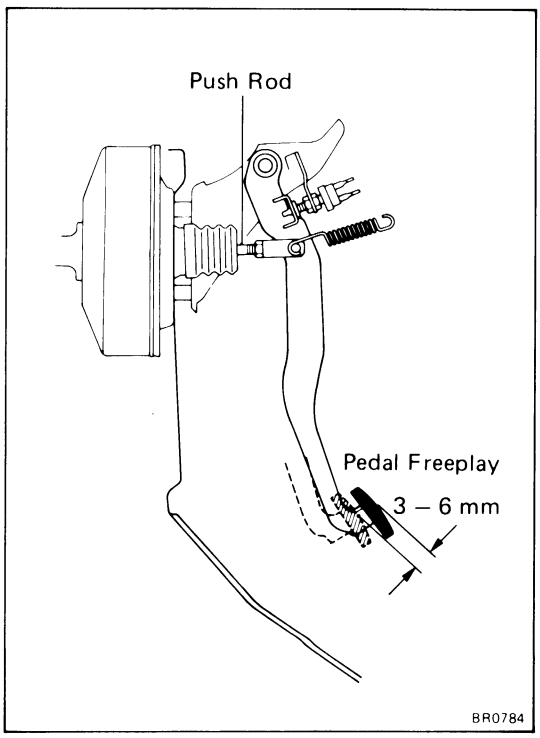

3. CHECK THAT PEDAL FREEPLAY IS CORRECT

(a) Stop the engine and depress the brake pedal several times until there is no more vacuum left in the booster.

(b) Push in the pedal by hand until the beginning of the second resistance is felt, measure the distance, as shown.

Pedal freeplay: 3 — 6 mm (0.12 — 0.24 in.)

HINT: The freeplay to the first resistance is due to the play between the clevis and pin. And it is 1 — 3 mm (0.04 — 0.12 in.) on the pedal.

4. IF NECESSARY, ADJUST PEDAL FREEPLAY

(a) If incorrect, adjust the pedal freeplay by turning the pedal push rod.

(b) Start the engine and confirm that pedal freeplay exists.

(c) After adjusting the pedal freeplay, check the pedal height.

(d) Install the air duct and instrument lower finish panel.

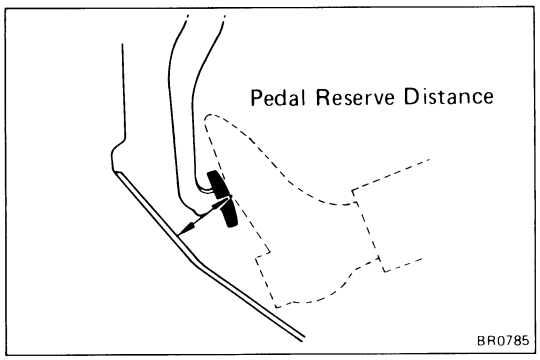

5. CHECK THAT PEDAL RESERVE DISTANCE IS CORRECT

Release the parking brake. With engine running, depress the pedal and measure the pedal reserve distance, as shown.

Pedal reserve distance from asphalt sheet at 50 kg (110.2 lb, 490N): More than 80 mm (3.15 in.)

If incorrect, troubleshoot the brake system.

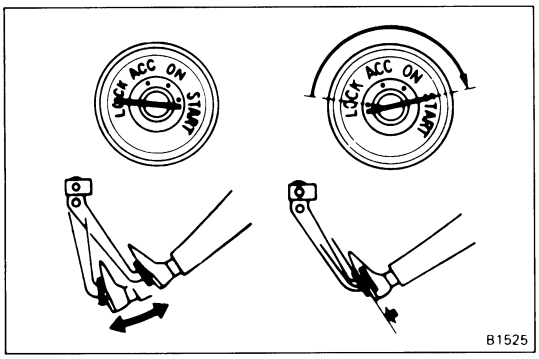

OPERATIONAL TEST OF BRAKE BOOSTER

HINT: If there is leakage or lack of vacuum, repair before testing. If available, use a brake booster tester to check the booster operating condition.

1. OPERATING CHECK

(a) Depress the brake pedal several times with the engine stopped, and check that is no change in the pedal reserve distance.

(b) Depress the brake pedal and start the engine. If the pedal goes down slightly, operation is normal.

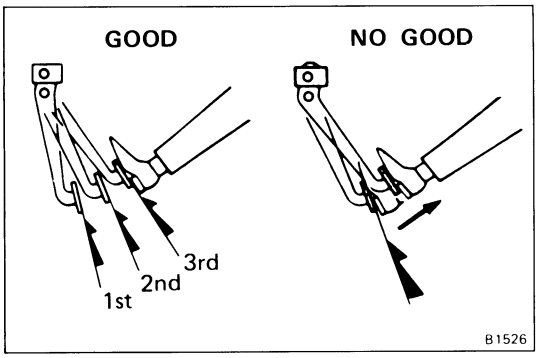

2. AIR TIGHTNESS CHECK

(a) Start the engine and stop it after one or two minutes. Depress the brake pedal several times slowly. If the pedal goes down furtherest the first time, but gradually rises after the second or third time, the booster is air tight.

(b) Depress the brake pedal while the engine is running, and stop it with the pedal depressed. If there is no change in pedal reserve travel after holding the pedal for thirty seconds, the booster is air tight.

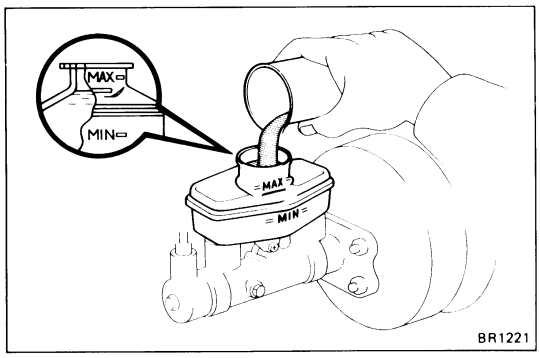

BLEEDING OF BRAKE SYSTEM

HINT: If any work is done on the brake system or if air is suspected in the brake lines, bleed the system of air.

NOTICE: Do not let brake fluid remain on a painted surface. Wash it off immediately.

1. FILL BRAKE RESERVOIR WITH BRAKE FLUID

Check the fluid level in the reservoir. If necessary, add brake fluid.

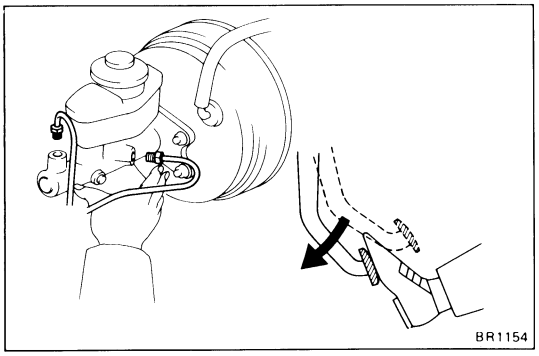

2. BLEED MASTER CYLINDER

HINT: If the master cylinder was disassembled or if the reservoir becomes empty, bleed the air from the master cylinder.

(a) Disconnect the brake tubes from the master cylinder. Use a container to catch the brake fluid.

(b) Slowly depress the brake pedal and hold it.

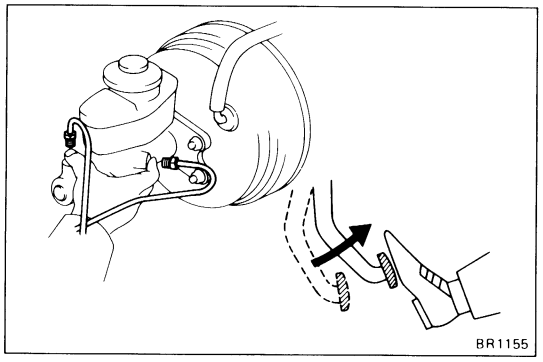

(c) Block off the outer holes with your fingers, and release the brake pedal.

(d) Repeat (b) and (c) three or four times.

(e) Connect the brake tubes to the master cylinder.

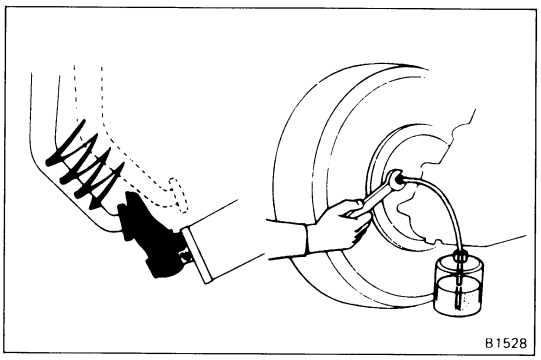

3. BEGIN BLEEDING AIR FROM BRAKE OR WHEEL CYLINDER WITH LONGEST HYDRAULIC LINE

(a) Connect the vinyl tube to the brake or wheel cylinder bleeder plug, and insert the other end of tube in a half-full container of brake fluid.

(b) Slowly depress the brake pedal several times.

(c) While having an assistant press on the pedal, loosen the bleeder plug until fluid starts to runout. Then close the bleeder plug.

(d) Repeat (b) and (c) until there are no more air bubbles in the fluid.

(e) Tighten the bleeder plug.

Bleeder plug tightening torque:
85 kg-cm (74 in.-lb, 8.3 N·m)

4. REPEAT PROCEDURE FOR EACH WHEEL

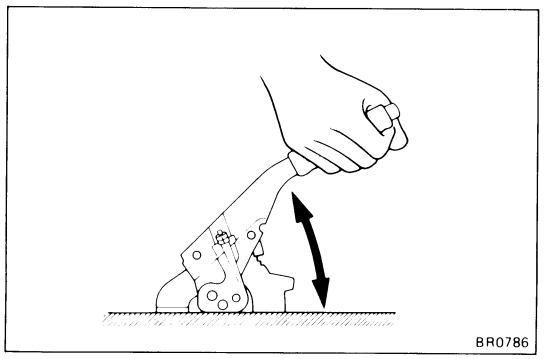

CHECK AND ADJUSTMENT OF PARKING BRAKE

1. CHECK THAT PARKING BRAKE LEVER TRAVEL IS CORRECT

Pull the parking brake lever all the way up, and count the number of clicks.

Parking brake lever travel at 20 kg (44.1 lb, 196 N):
5 — 8 clicks

If incorrect, adjust the parking brake.

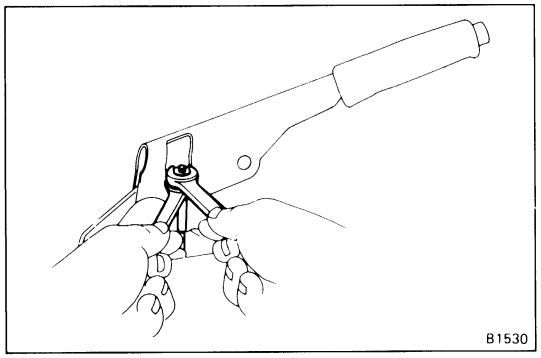

2. IF NECESSARY, ADJUST PARKING BRAKE LEVER TRAVEL

HINT: Before adjusting the parking brake, make sure that the rear brake shoe clearance has been adjusted.

For shoe clearance adjustment, see step 9 on page BR-45.

(a) Remove the console box.

(b) Loosen the lock nut and turn the adjusting nut until the lever travel is correct.

(c) Tighten the lock nut.

Torque: 55 kg-cm (48 in.-lb, 5.4 N·m)

(d) Install the console box.

MASTER CYLINDER

REMOVAL OF MASTER CYLINDER

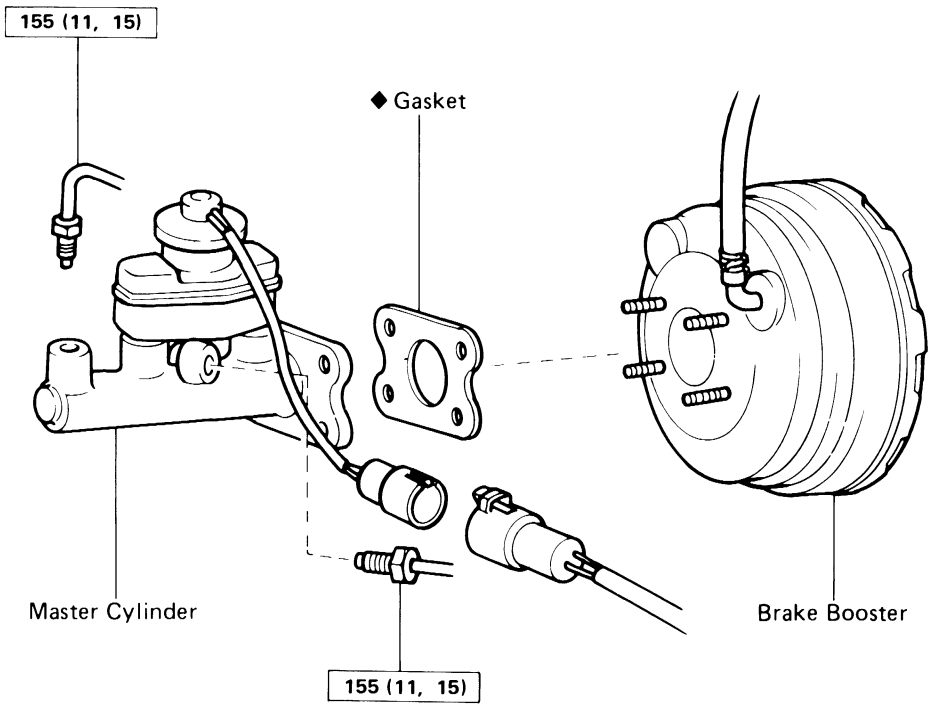

kg-cm (ft-lb, N·m) : Specified torque
◆ Non-reusable part

BR1219

1. **DISCONNECT LEVEL WARNING SWITCH CONNECTOR**

2. **TAKE OUT FLUID WITH SYRINGE OR SUCH**

   CAUTION: Do not let brake fluid remain on a painted surface. Wash off it immediately.

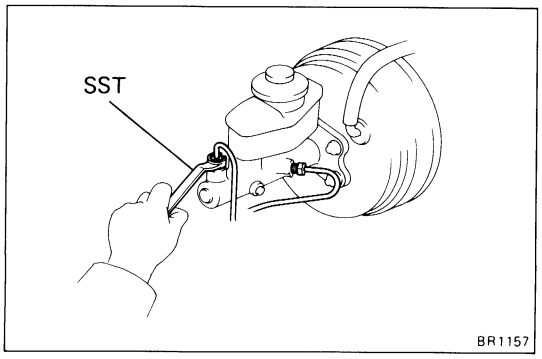

3. **DISCONNECT TWO BRAKE TUBES**

   Using SST, disconnect two brake tubes from the master cylinder.

   SST 09751-36011

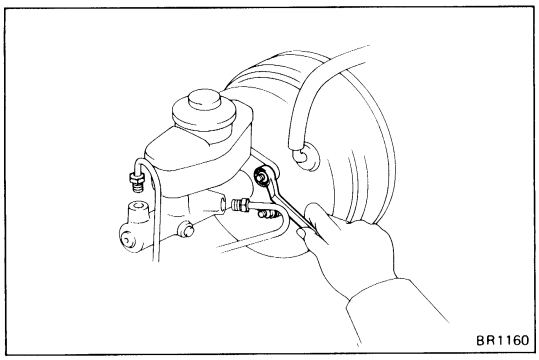

4. REMOVE MASTER CYLINDER

(a) Remove the four nuts.

(b) Remove the master cylinder from the brake booster and remove the gasket.

(w/o Anti-lock Brake System)

COMPONENTS

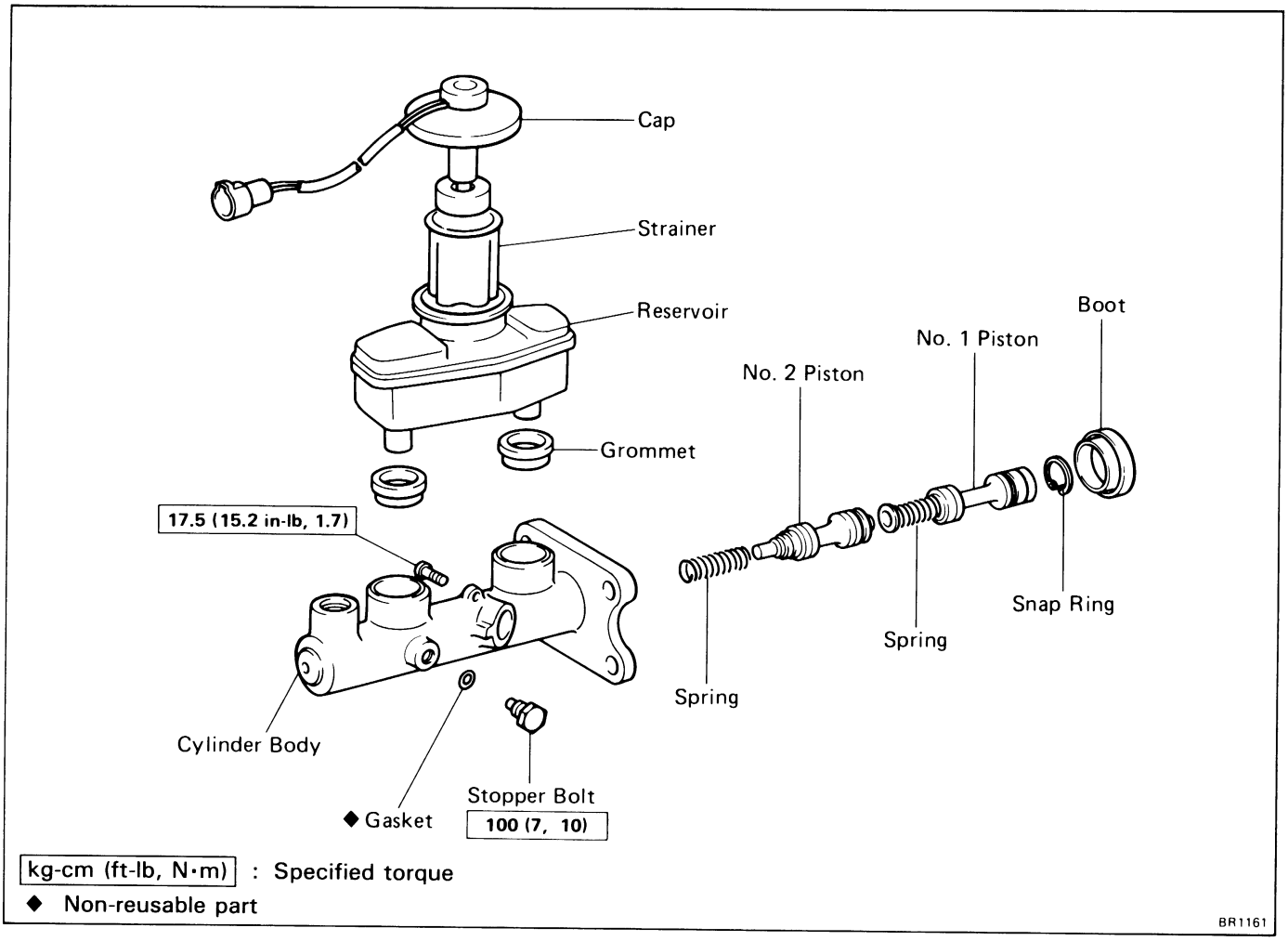

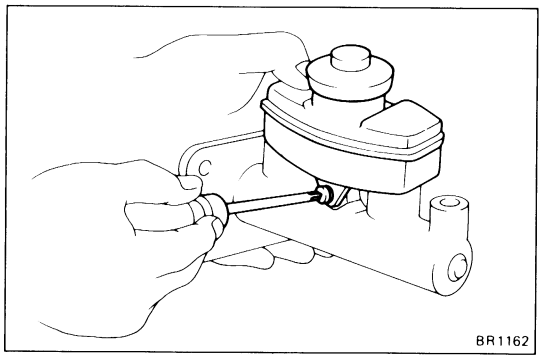

DISASSEMBLY OF MASTER CYLINDER

1. **REMOVE RESERVOIR**
   (a) Remove the set screw and pull out the reservoir.
   (b) Remove the cap and strainer from the reservoir.
2. **REMOVE TWO GROMMETS**
3. **PLACE CYLINDER IN VISE**

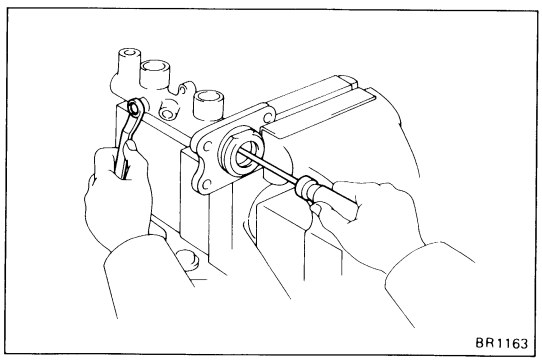

4. **REMOVE PISTON STOPPER BOLT**
   Using a screwdriver, push the pistons in all the way and remove the piston stopper bolt and gasket.
   HINT: Tape the screwdriver tip before use.

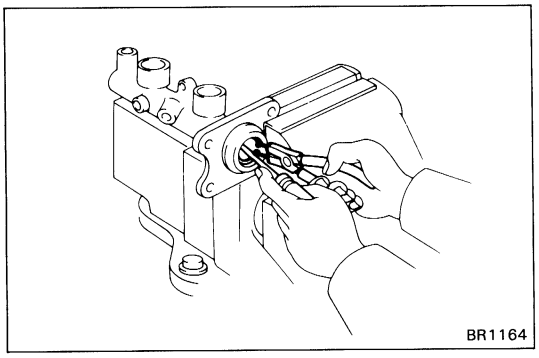

5. REMOVE TWO PISTONS AND SPRINGS

(a) Push in the piston with a screwdriver and remove the snap ring with snap ring pliers.

(b) Remove the No.1 piston and spring by hand, pulling straight out, not at an angle.

NOTICE: If pulled out at an angle, there is possibility of damaging the cylinder bore.

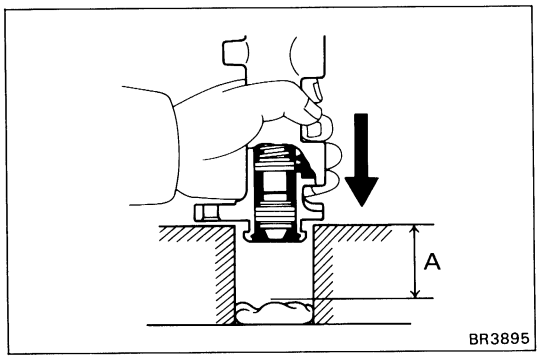

(c) Place a rag and two wooden blocks on the work table, and lightly tap the cylinder flange against the block edges until the No.2 piston drops out of cylinder.

HINT: Make sure the distance (A) from the rag to the top of blocks is at least 100 mm (3.94 in.).

INSPECTION OF MASTER CYLINDER COMPONENTS

HINT: Clean the disassembled parts with compressed air.

1. INSPECT CYLINDER BORE FOR RUST OR SCORING

2. INSPECT CYLINDER FOR WEAR OR DAMAGE

If necessary, clean or replace the cylinder.

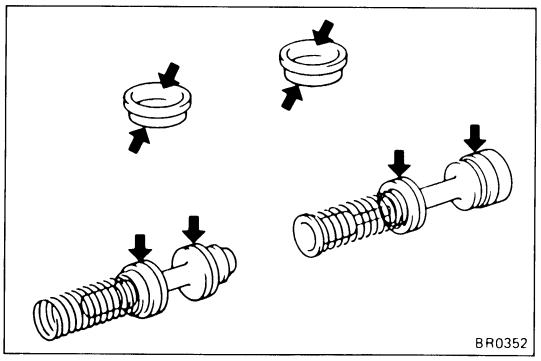

ASSEMBLY OF MASTER CYLINDER

(See page BR-11)

1. **APPLY LITHIUM SOAP BASE GLYCOL GREASE TO RUBBER PARTS INDICATED BY ARROWS**

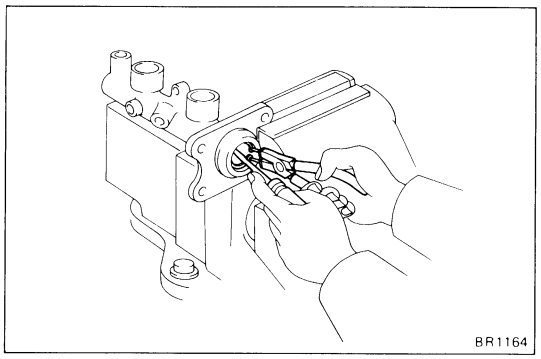

2. **INSTALL TWO SPRINGS AND PISTONS**

   NOTICE: Be careful not to damage the rubber lips on the pistons.

   (a) Insert the two springs and pistons straight in, not at an angle.

   NOTICE: If inserted at an angle, there is a possibility of damaging the cylinder bore.

   (b) Push in the piston with a screwdriver and install the snap ring with snap ring pliers.

   HINT: Tape the screwdriver tip before use.

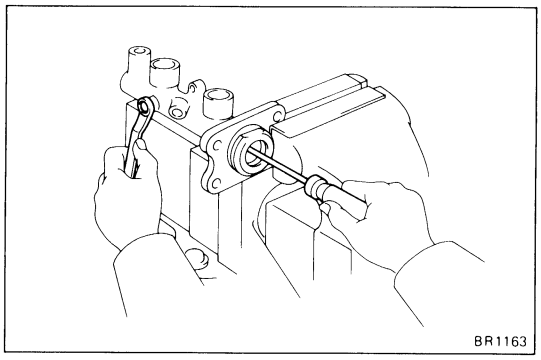

3. **INSTALL PISTON STOPPER BOLT**

   Using a screwdriver, push the piston in all the way and install the piston stopper bolt over the gasket. Torque the bolt.

   Torque: 100 kg-cm (7 ft-lb, 10 N·m)

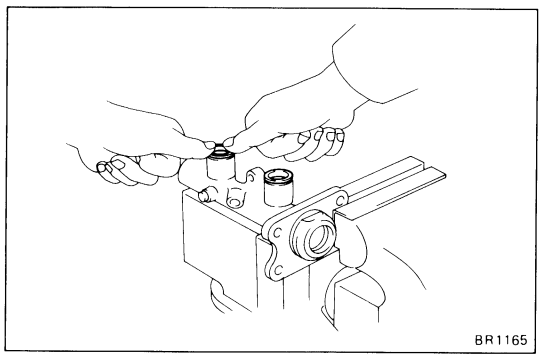

4. **INSTALL TWO GROMMETS**

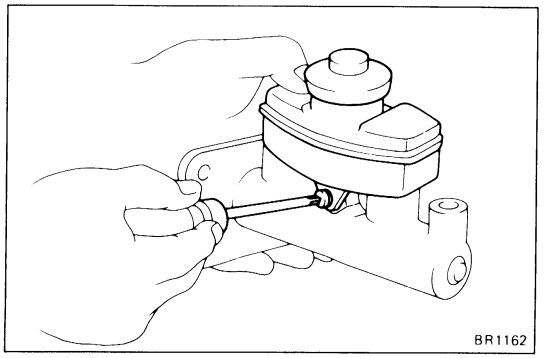

5. **INSTALL RESERVOIR**

   (a) Install the cap and strainer to the reservoir.

   (b) Push the reservoir onto the cylinder.

   (c) Install the set screw while pushing on the reservoir.

   Torque: 17.5 kg-cm (15.2 in.-lb, 1.7 N·m)

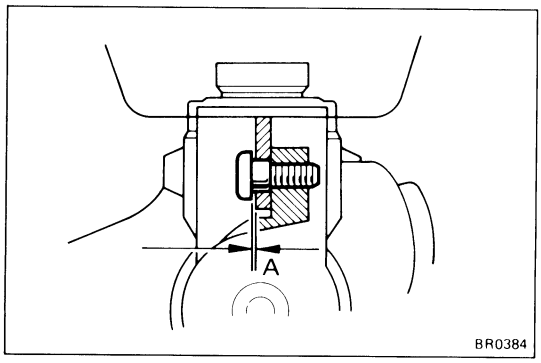

NOTICE: Because the master cylinder and reservoir tank union is a grommet type, the set screw is designed to not separate the reservoir from cylinder and will not tighten down the reservoir. Therefore, there is a clearance at point A. Do not insert washers or an equivalent when tightening.

(w/ Anti-lock Brake System)

COMPONENTS

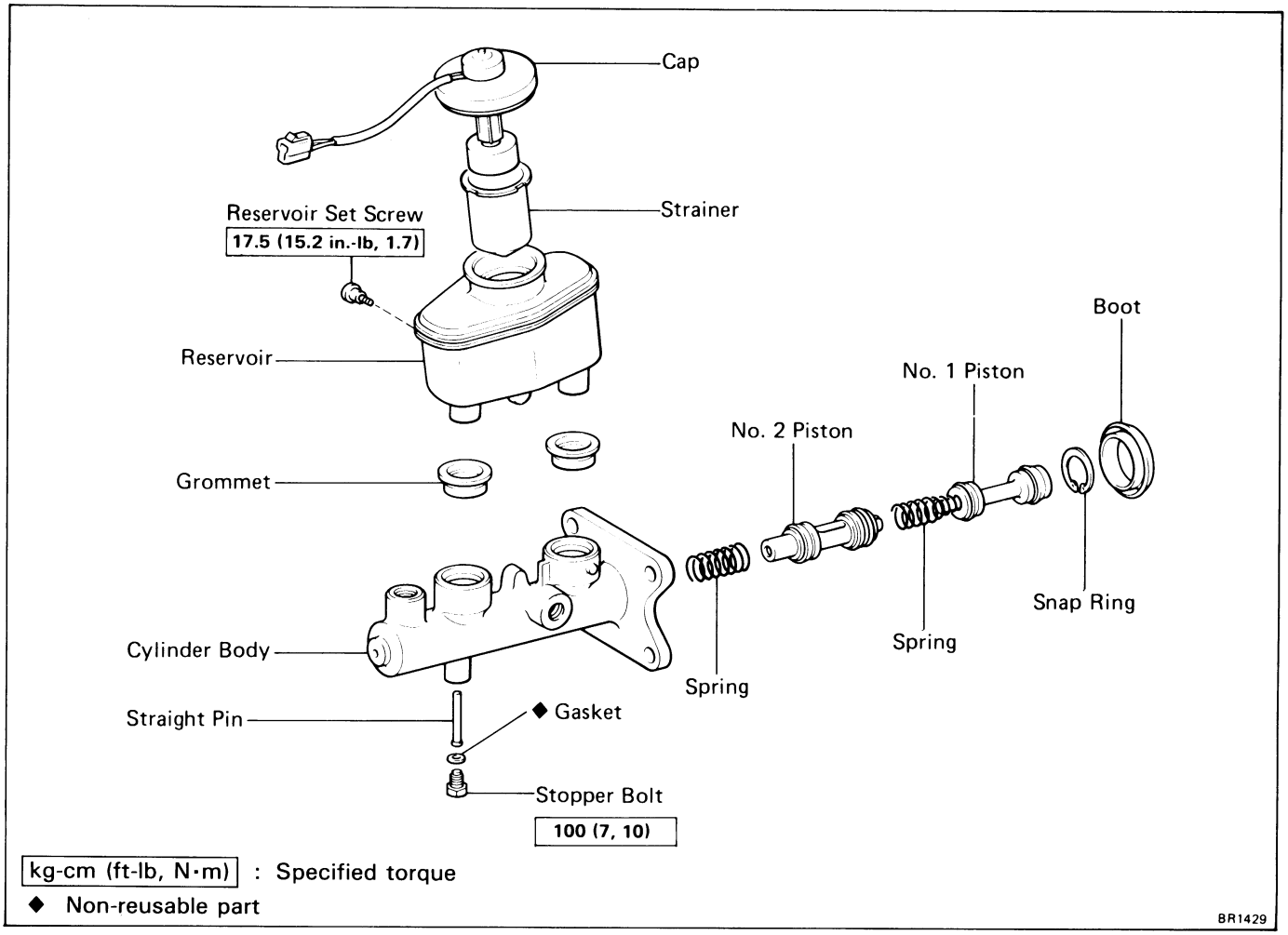

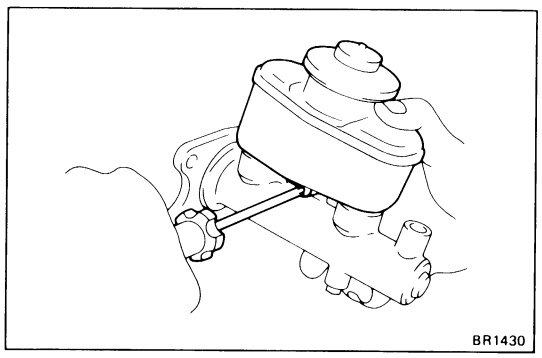

DISASSEMBLY OF MASTER CYLINDER

1. **REMOVE RESERVOIR**
   (a) Remove the set screw and pull out the reservoir.
   (b) Remove the cap and strainer from the reservoir.
2. **REMOVE TWO GROMMETS**
3. **PLACE CYLINDER IN VISE**

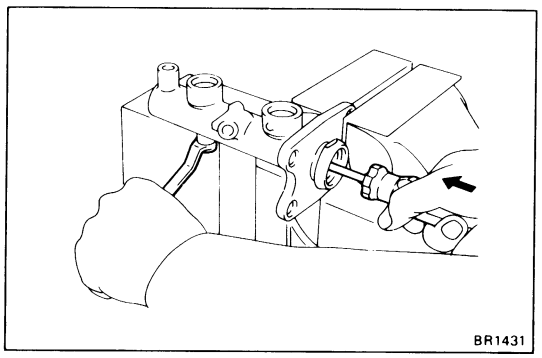

4. **REMOVE PISTON STOPPER BOLT**
   Using a screwdriver, push the piston in all the way and remove the piston stopper bolt, straight pin and gasket.
   HINT: Tape the screwdriver tip before use.

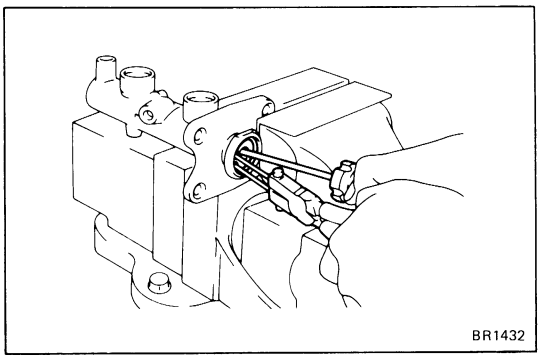

5. REMOVE TWO PISTONS AND SPRINGS

(a) Push in the piston with a screwdriver and remove the snap ring with snap ring pliers.

(b) Remove the No. 1 piston and spring by hand, pulling straight out, not at an angle.

NOTICE: If pulled out at an angle, there is possibility of damaging the cylinder bore.

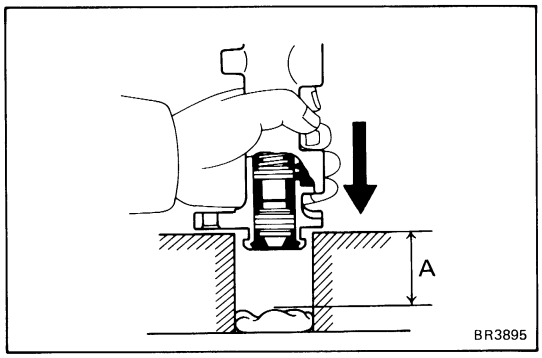

(c) Place a rag and two wooden blocks on the work table, and lightly tap the cylinder flange against the block edges until the No. 2 piston drops out of cylinder.

HINT: Make sure the distance (A) from the rag to the top of the blocks is at least 100 mm (3.94 in.).

INSPECTION OF MASTER CYLINDER COMPONENTS

HINT: Clean the disassembled parts with compressed air.

1. INSPECT CYLINDER BORE FOR RUST OR SCORING

2. INSPECT CYLINDER FOR WEAR OR DAMAGE

If necessary, clean or replace the cylinder.

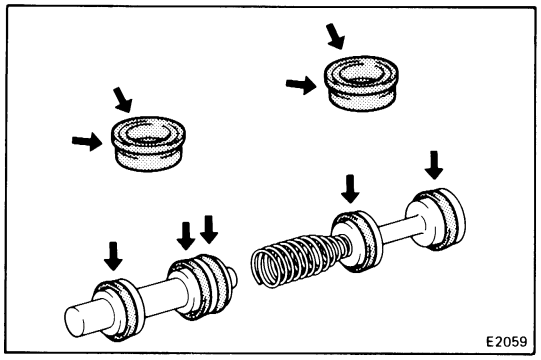

ASSEMBLY OF MASTER CYLINDER

(See page BR-15)

1. APPLY LITHIUM SOAP BASE GLYCOL GREASE TO RUBBER PARTS INDICATED BY ARROWS

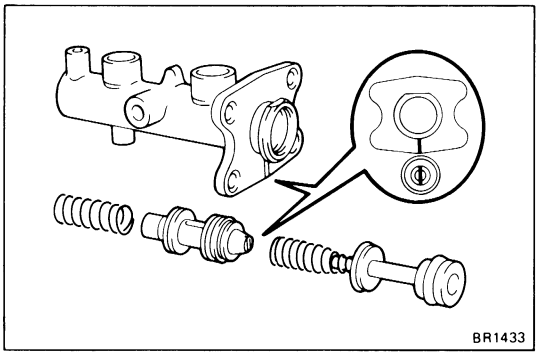

2. INSTALL TWO SPRINGS AND PISTONS

NOTICE: Be careful not to damage the rubber lips on the pistons.

(a) Insert the spring.

(b) Align the grooves on the No. 2 piston and master cylinder flange as shown, and insert the No. 2 piston straight in, not at an angle.

NOTICE: If inserted at an angle, there is a possibility of damaging the cylinder bore.

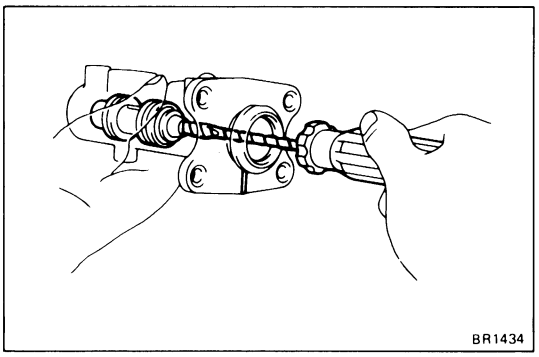

(c) Using a screwdriver, align the grooves again.

HINT: Wind vinyl tape on the screwdriver.

NOTICE: Be careful not to scratch the cylinder bore.

(d) Temporarily insert the straight pin, and check that it can be inserted easily.

(e) Insert the spring and No. 1 piston straight in, not an angle.

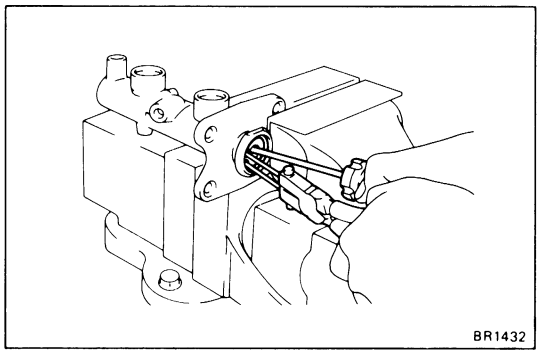

(f) Push in the piston with a screwdriver and install the snap ring with snap ring pliers.

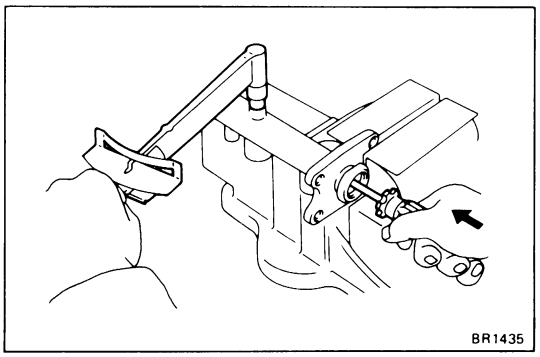

3. INSTALL PISTON STOPPER BOLT

Using a screwdriver, push the piston in all the way and insert the straight pin and then install the piston stopper bolt over the gasket. Torque the bolt.

Torque: 100 kg-cm (7 ft-lb, 10 N·m)

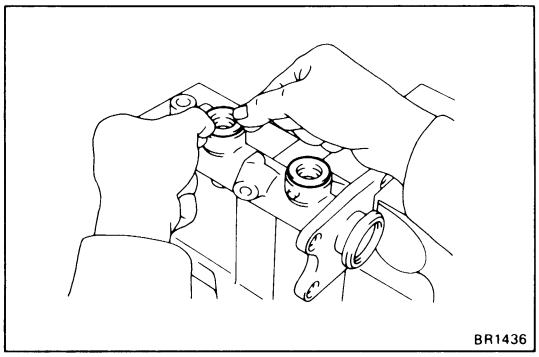

4. INSTALL TWO GROMMETS

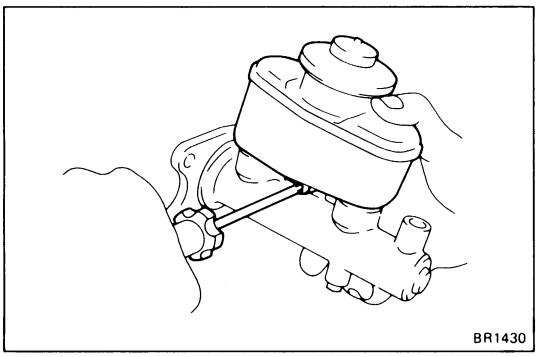

5. INSTALL RESERVOIR

(a) Install the cap and strainer to the reservoir.

(b) Push the reservoir onto the cylinder.

(c) Install the set screw while pushing on the reservoir.

Torque: 17.5 kg-cm (15.2 in.-lb, 1.7 N·m)

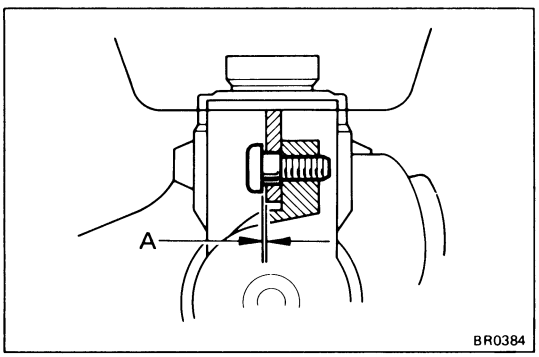

NOTICE: Because the master cylinder and reservoir tank union is a grommet type, the set screw is designed to not separate the reservoir from cylinder and will not tighten down the reservoir. Therefore, there is a clearance at point A. Do not insert washers or an equivalent when tightening.

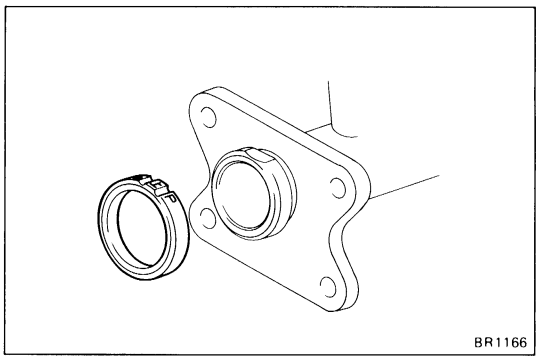

INSTALLATION OF MASTER CYLINDER

(See page BR-9)

1. **CLEAN OUT GROOVE ON LOWER INSTALLATION SURFACE OF MASTER CYLINDER**

2. **CONFIRM THAT "UP" MARK ON MASTER CYLINDER BOOT IS IN CORRECT POSITION**

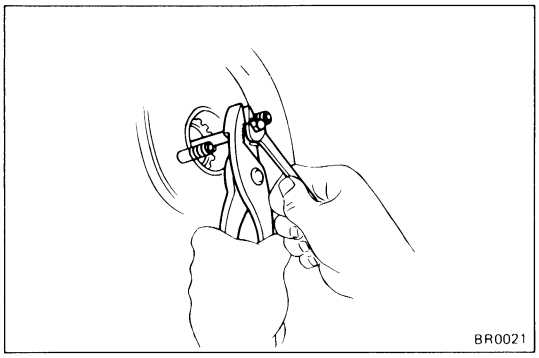

3. **ADJUST LENGTH OF BRAKE BOOSTER PUSH ROD BEFORE INSTALLING MASTER CYLINDER**
   (See page BR-21)

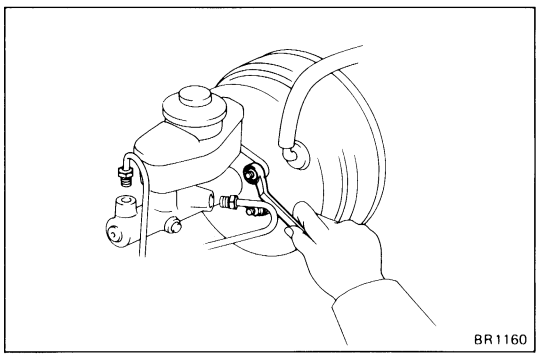

4. **INSTALL MASTER CYLINDER**

   Install the master cylinder and gasket on the brake booster with four nuts.

   Torque: 130 kg-cm (9 ft-lb, 13 N·m)

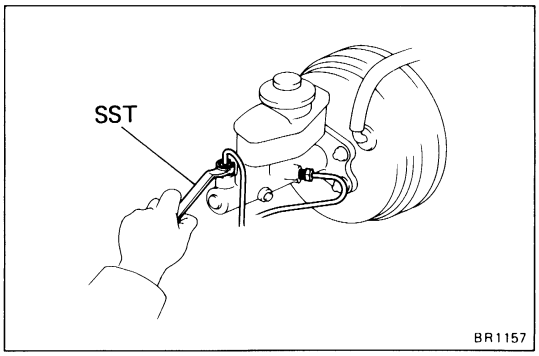

5. **CONNECT TWO BRAKE TUBES**

   Using SST, connect the brake tubes to the master cylinder. Torque the union nuts.

   SST 09751-36011

   Torque: 155 kg-cm (11 ft-lb, 15 N·m)

6. **CONNECT LEVEL WARNING SWITCH CONNECTOR**

7. **FILL BRAKE RESERVOIR WITH BRAKE FLUID AND BLEED BRAKE SYSTEM**
   (See page BR-6)

8. **CHECK FOR FLUID LEAKAGE**

9. **CHECK AND ADJUST BRAKE PEDAL**
   (See page BR-5)

BRAKE BOOSTER

REMOVAL OF BRAKE BOOSTER

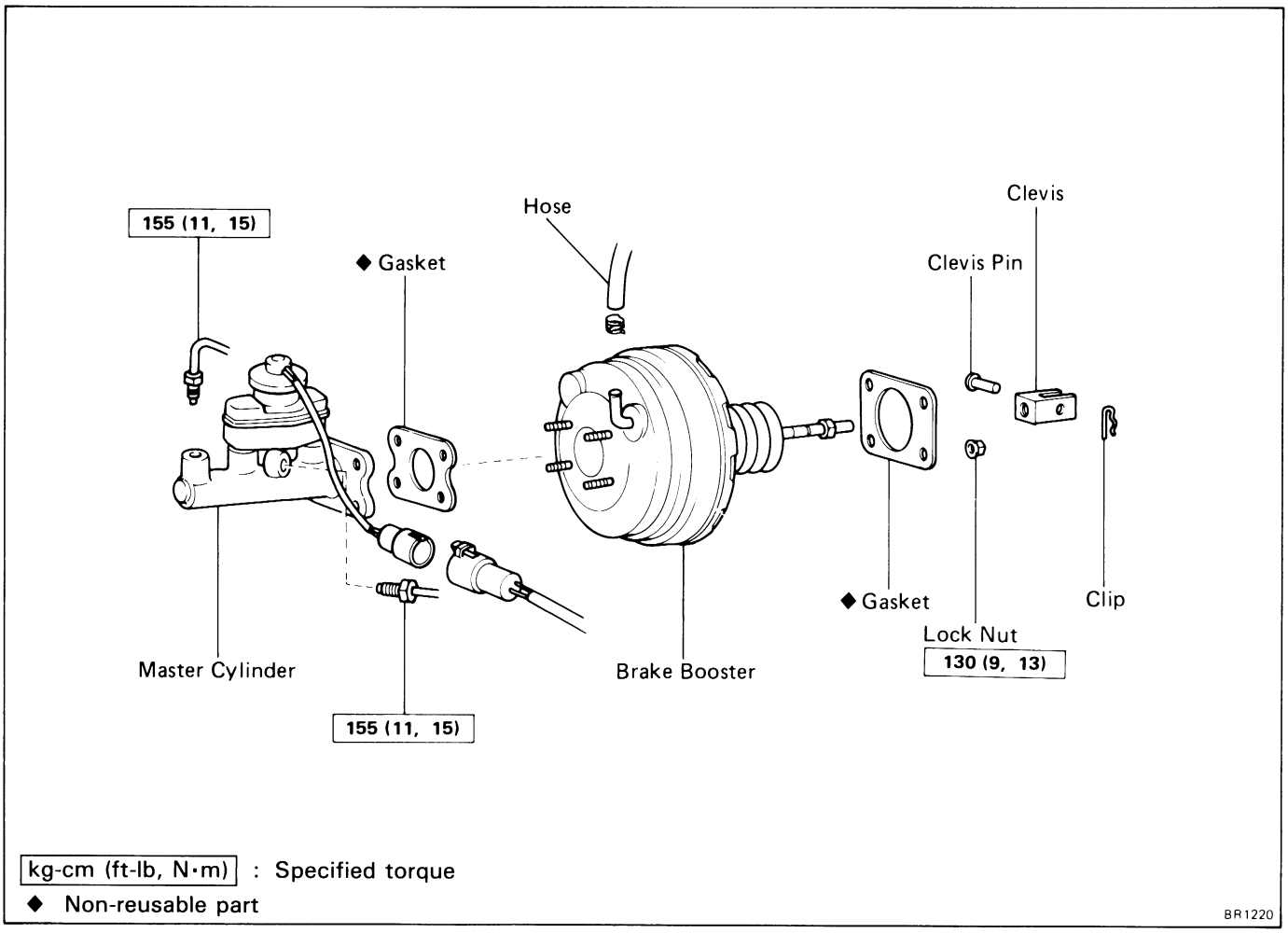

1. **REMOVE MASTER CYLINDER**
   (See page BR-9)
2. **REMOVE CRUISE CONTROL ACTUATOR BRACKET BOLTS**
3. **DISCONNECT VACUUM HOSE FROM BRAKE BOOSTER**
4. **REMOVE INSTRUMENT LOWER FINISH PANEL**
5. **REMOVE PEDAL RETURN SPRING**
6. **REMOVE CLIP AND CLEVIS PIN**
7. **REMOVE BRAKE BOOSTER, GASKET AND CLEVIS**
   (a) Remove the four nuts and clevis.
   (b) Pull out the brake booster and gasket.

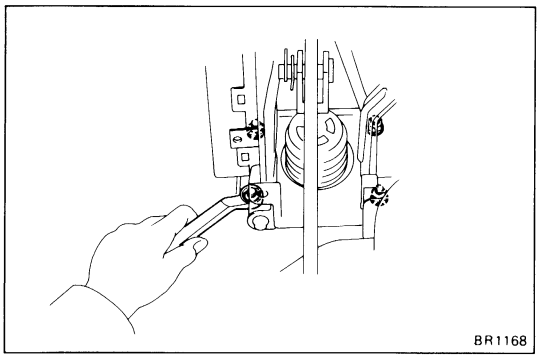

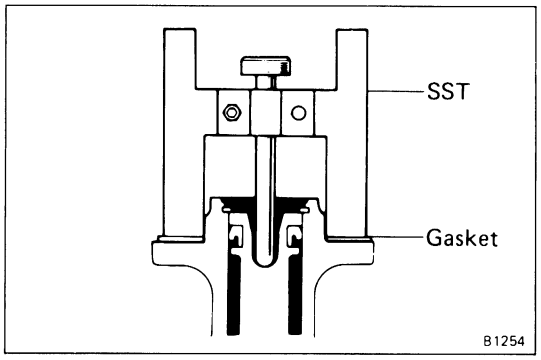

INSTALLATION OF BRAKE BOOSTER

(See page BR-20)

1. ADJUST LENGTH OF BOOSTER PUSH ROD

(a) Set the SST on the master cylinder with the gasket, and then lower the pin until its slightly touches the piston.

SST 09737-00010

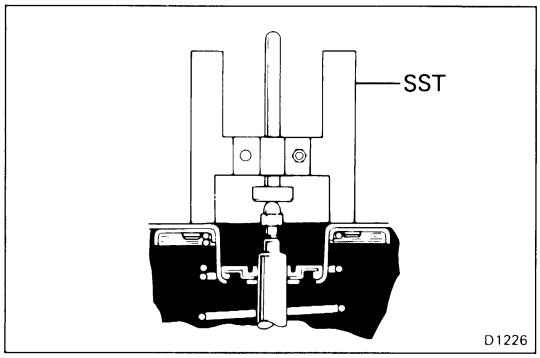

(b) Turn the SST upside down and set it on the booster.

SST 09737-00010

(c) Measure the clearance between the booster push rod and pin head (SST).

Clearance: 0 mm (0 in.)

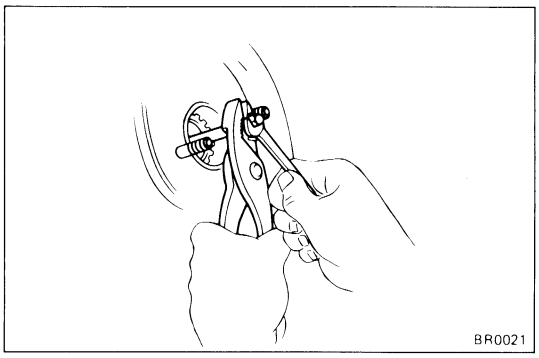

(d) Adjust the booster push rod length until the push rod lightly touches the pin head.

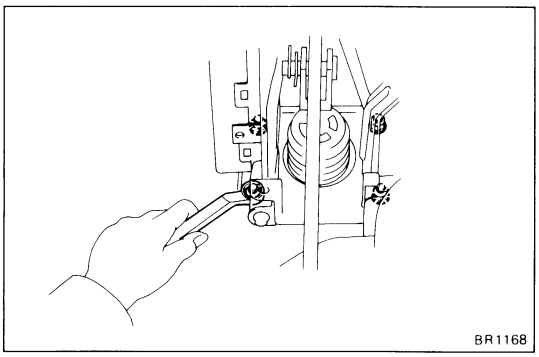

2. INSTALL BRAKE BOOSTER, GASKET AND CLEVIS

(a) Install the booster and gasket.

(b) Install the clevis and tighten the lock nut.

Torque: 260 kg-cm (19 ft-lb, 25 N·m)

(c) Install and torque the booster mounting nuts.

Torque: 130 kg-cm (9 ft-lb, 13 N·m)

3. CONNECT CLEVIS TO BRAKE PEDAL

Insert the clevis pin into the clevis and brake pedal, and install the clip to the clevis pin.

4. INSTALL PEDAL RETURN SPRING

5. INSTALL INSTRUMENT LOWER FINISH PANEL

6. **INSTALL MASTER CYLINDER**
   (See page BR-19)

7. **CONNECT VACUUM HOSE TO BRAKE BOOSTER**

8. **INSTALL CRUISE CONTROL ACTUATOR BRACKET BOLTS**

9. **FILL BRAKE RESERVOIR WITH BRAKE FLUID AND BLEED BRAKE SYSTEM**
   (See page BR-6)

10. **CHECK FOR FLUID LEAKAGE**

11. **CHECK AND ADJUST BRAKE PEDAL**
    (See page BR-5)

12. **PERFORM OPERATIONAL CHECK**
    (See page BR-6)

FRONT BRAKE

COMPONENTS

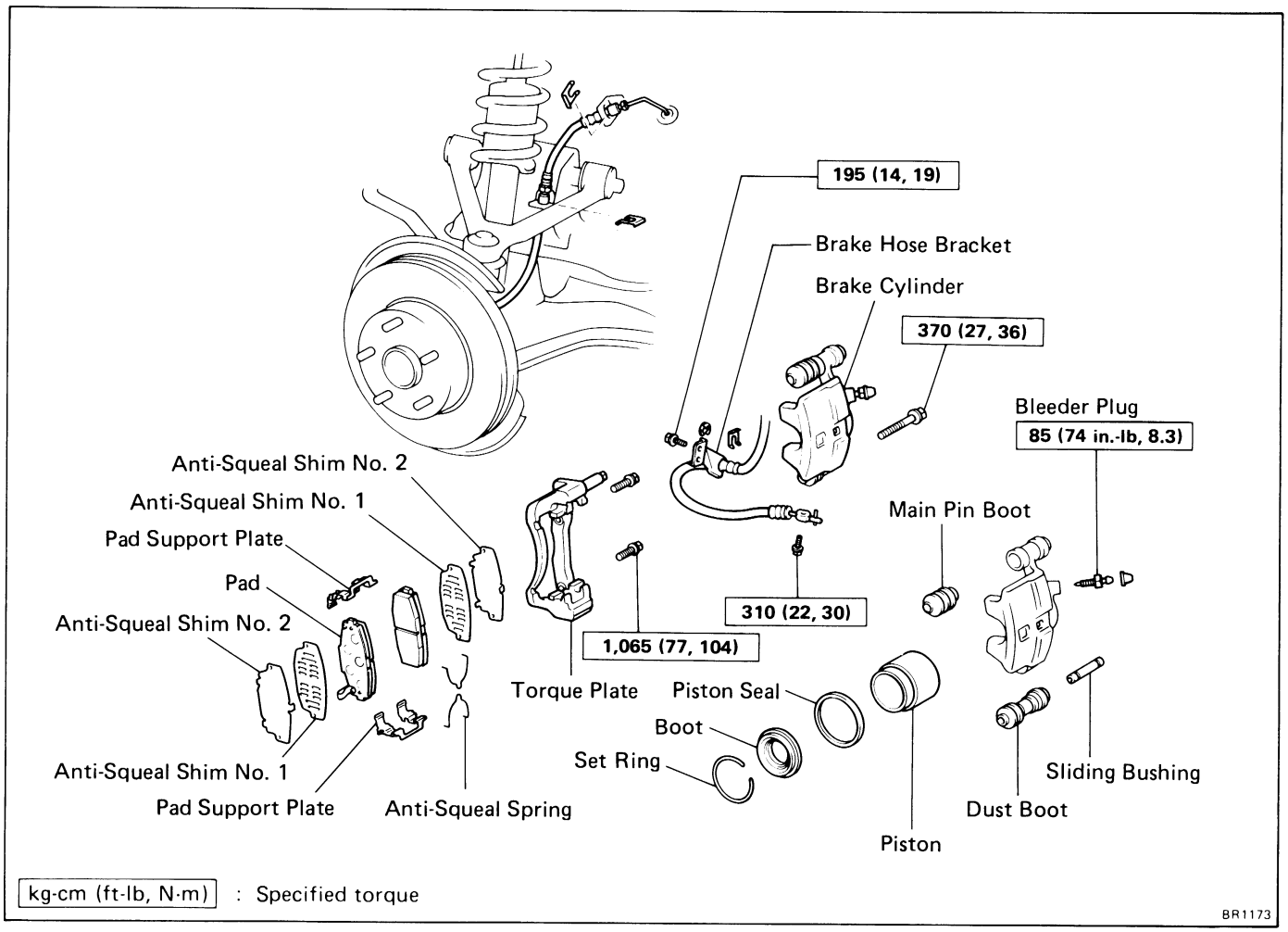

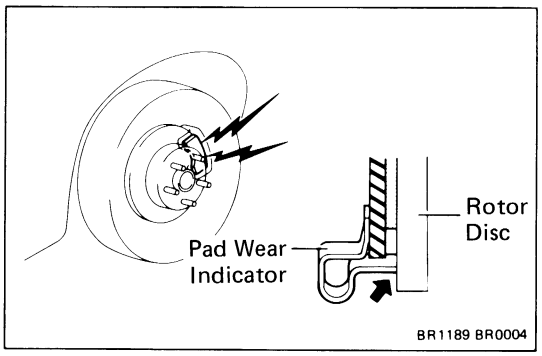

REPLACEMENT OF BRAKE PADS

If a squealing noise occurs while braking, inspect the brake pads.

1. **REMOVE FRONT WHEEL**

   Remove the wheel and temporarily fasten the rotor disc with the hub nuts.

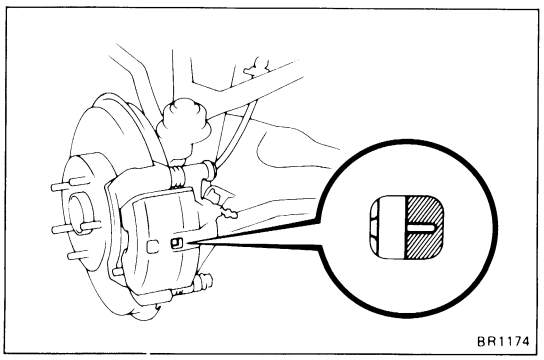

2. **INSPECT PAD LINING THICKNESS**

   Check the pad thickness through the cylinder inspection hole and replace pads if not within specification.

   Minimum thickness: 1.0 mm (0.039 in.)

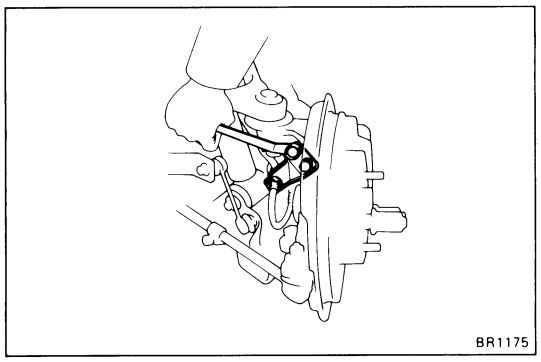

3. REMOVE BRAKE HOSE BRACKET

Remove the two bolts and remove the bracket.

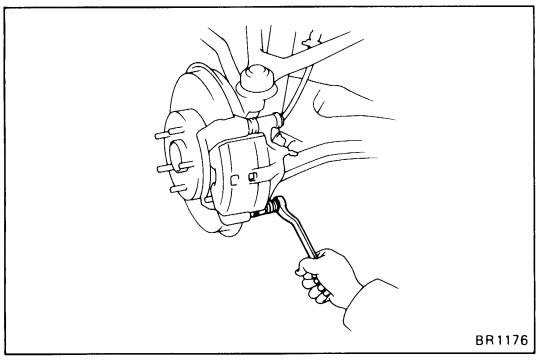

4. REMOVE CYLINDER FROM TORQUE PLATE

(a) Remove the installation bolt from the torque plate.

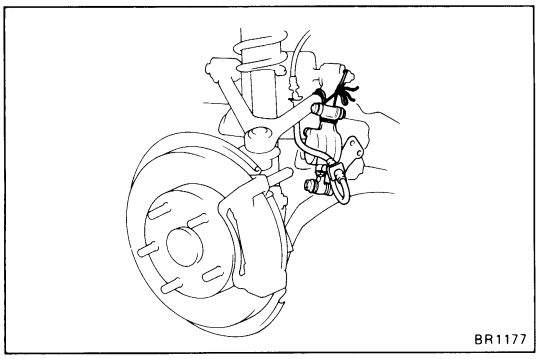

(b) Remove the brake cylinder and suspend it so the hose is not stretched.

HINT: Do not disconnect the brake hose.

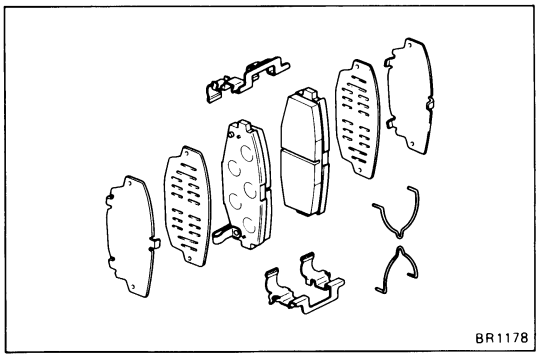

5. REMOVE FOLLOWING PARTS

(a) Two anti-squeal springs

(b) Two brake pads

(c) Four anti-squeal shims

(d) Two pad support plates

6. CHECK ROTOR DISC THICKNESS
(See step 2 on page BR-28)

7. CHECK ROTOR DISC RUNOUT
(See step 3 on page BR-28)

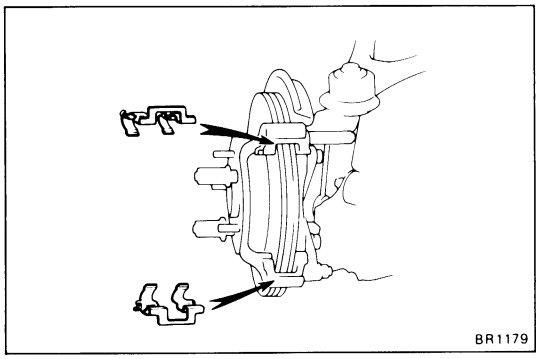

8. INSTALL TWO PAD SUPPORT PLATES

Install the two pad support plates to the torque plate.

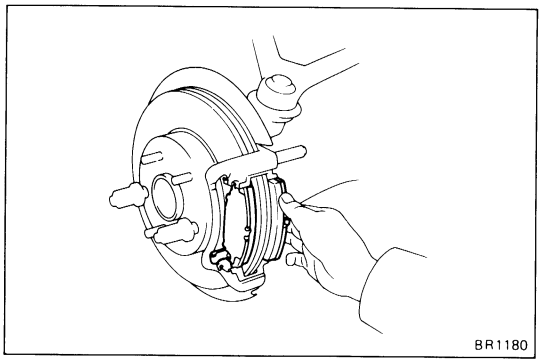

9. INSTALL NEW PADS

(a) Install anti-squeal shim No.1 to the pad.

(b) Install the pads onto each support plate.

HINT: Install the pads so the wear indicator is at the bottom side.

(c) Install the anti-squeal shim No.2 over shim No.1.

(d) Install the two anti-squeal springs.

NOTICE: Do not allow oil or grease to get on the rubbing face.

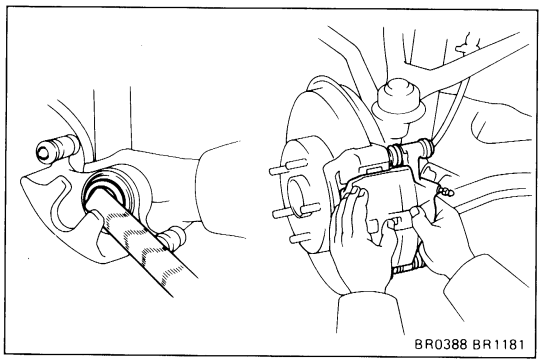

10. INSTALL CYLINDER

(a) Draw out a small amount of brake fluid from the reservoir.

(b) Press in piston with a hammer handle or an equivalent.

HINT: Always change the pad on one wheel at a time as there is a possibility of the opposite piston flying out.

(c) Insert the brake cylinder carefully so the boot is not wedged.

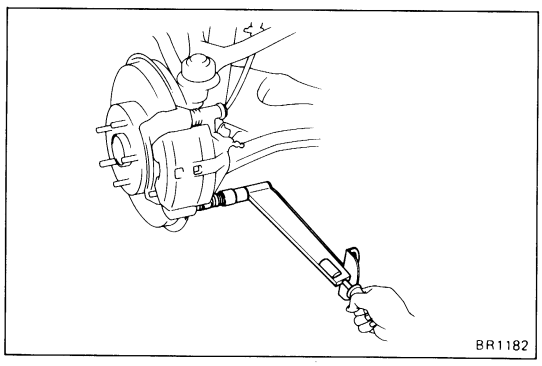

(d) Install and torque the installation bolt.

Torque: 370 kg-cm (27 ft-lb, 36 N·m)

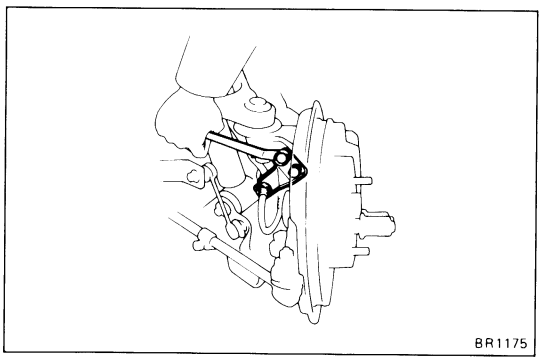

11. INSTALL BRAKE HOSE BRACKET

Install the brake hose bracket and torque the two bolts.

Torque: 195 kg-cm (14 ft-lb, 19 N·m)

12. INSTALL FRONT WHEEL

13. CHECK THAT FLUID LEVEL IS AT MAX LINE

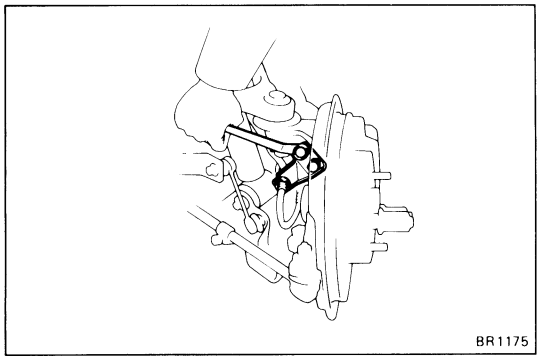

REMOVAL OF CYLINDER

(See page BR-23)

1. REMOVE BRAKE HOSE BRACKET

Remove the two bolts and bracket.

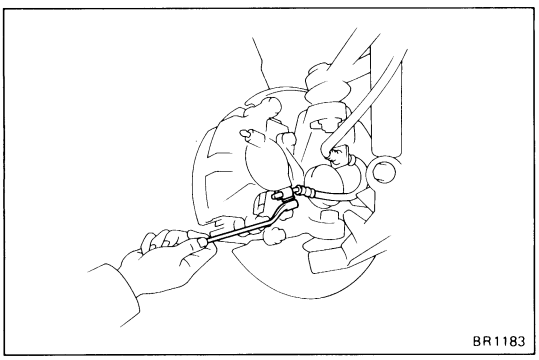

2. DISCONNECT BRAKE LINE

Remove the union bolt and disconnect the brake line. Use a container to catch the brake fluid.

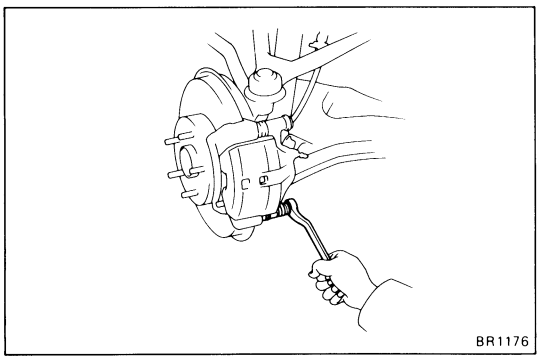

3. REMOVE CYLINDER FROM TORQUE PLATE

Remove the installation bolt and cylinder.

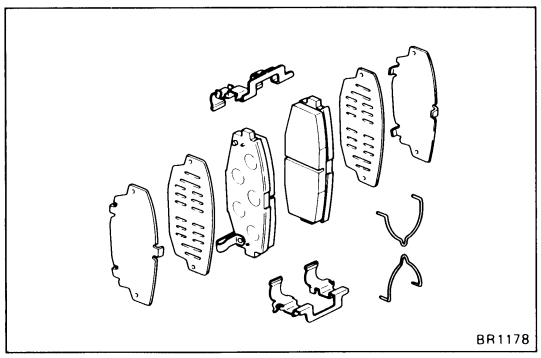

4. REMOVE PADS

(See step 5 on page BR-24)

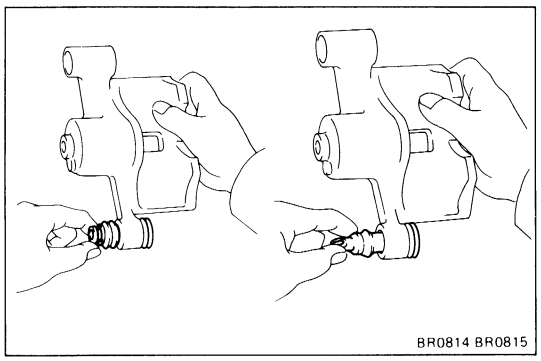

DISASSEMBLY OF CYLINDER

(See page BR-23)

1. REMOVE SLIDING BUSHING AND DUST BOOT

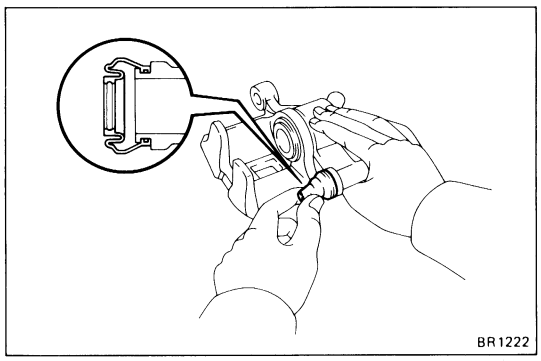

2. REMOVE MAIN PIN BOOT

Pull out the main pin boot.

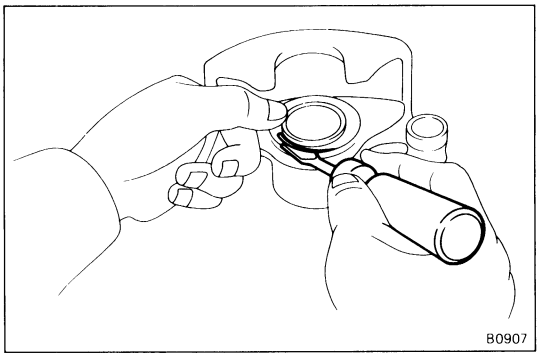

3. REMOVE CYLINDER BOOT SET RING AND CYLINDER BOOT

Using a screwdriver, remove the cylinder boot set ring and cylinder boot.

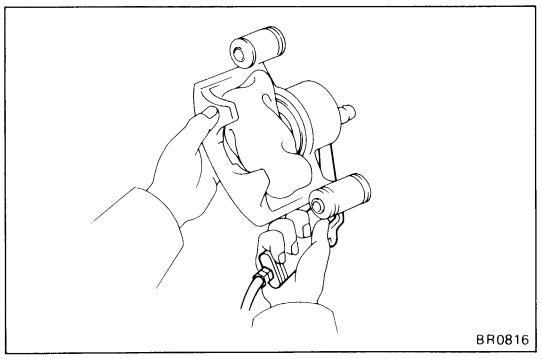

4. REMOVE PISTON FROM CYLINDER

(a) Put a piece of cloth or an equivalent as shown.

(b) Use compressed air to remove the piston from the cylinder.

CAUTION: Do not place your fingers in front of the piston when using compressed air.

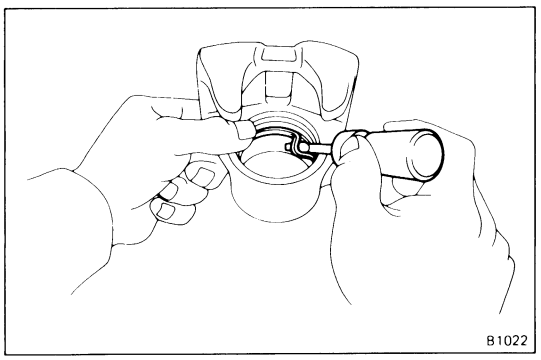

5. REMOVE PISTON SEAL FROM BRAKE CYLINDER

Using a screwdriver, remove the piston seal.

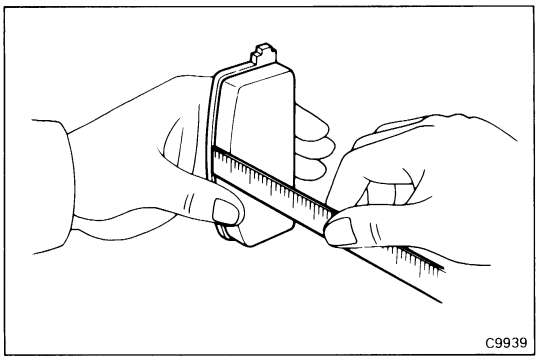

INSPECTION AND REPAIR OF FRONT BRAKE COMPONENTS

1. MEASURE PAD LINING THICKNESS

Standard thickness: 10.0 mm (0.394 in.)
Minimum thickness: 1.0 mm (0.039 in.)

Replace the pad if the thickness is less than the minimum or if it shows sing of uneven wear.

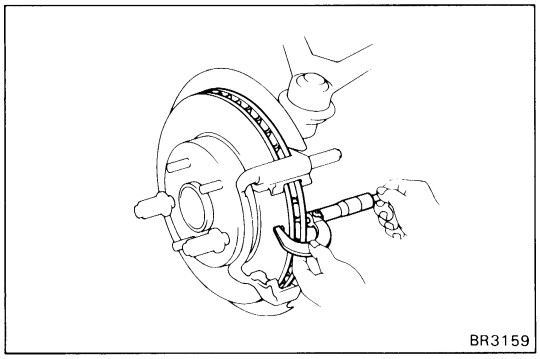

2. MEASURE ROTOR DISC THICKNESS

Standard thickness: 22.0 mm (0.866 in.)
Minimum thickness: 21.0 mm (0.827 in.)

If the disc is scored or worn, or if thickness is less than minimum, repair or replace the disc.

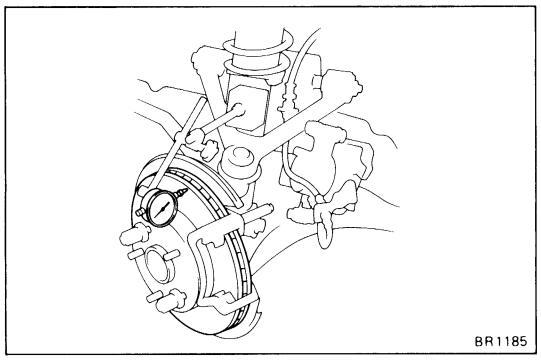

3. MEASURE ROTOR DISC RUNOUT

HINT: Before measuring the runout, confirm that the front hub bearing play is within specification.
Measure the rotor disc runout at 10 mm (0.39 in.) from the outer edge of the rotor disc.

Maximum disc runout: 0.13 mm (0.0051 in.)

If the runout is greater than the maximum, inspect and adjust it following the procedure below:

Then replace the disc if necessary.

(a) Remove the torque plate from the knuckle.

(b) Remove the hub nuts of the temporarily installed disc and pull off the rotor disc.

(c) Check that the hub axial play is within specification, and replace the bearing if not within specification. **(See page FA-8)**

(d) Install the rotor disc and measure the disc runout, then shift the rotor disc one fifth of a turn and measure the disc runout. Similarly measure the runout at each position, and select the position where the runout is minimum.

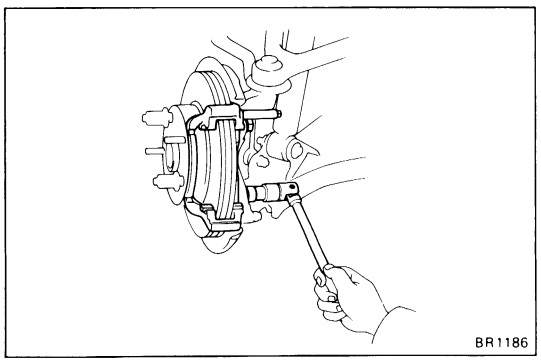

(e) In this position, if the runout is within specification, install the torque plate and torque the mounting bolts.

Torque: 1,065 kg-cm (77 ft-lb, 104 N·m)

(f) If not within specification, replace the rotor disc, and repeat (d) and (e).

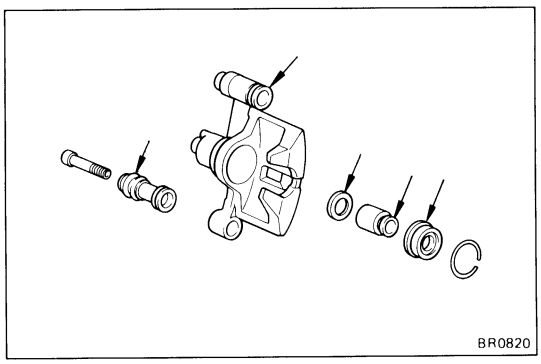

ASSEMBLY OF CYLINDER

(See page BR-23)

1. **APPLY LITHIUM SOAP BASE GLYCOL GREASE TO FOLLOWING PARTS**
   (a) Main pin boot
   (b) Sliding bushing and boot
   (c) Piston, piston seal and cylinder boot

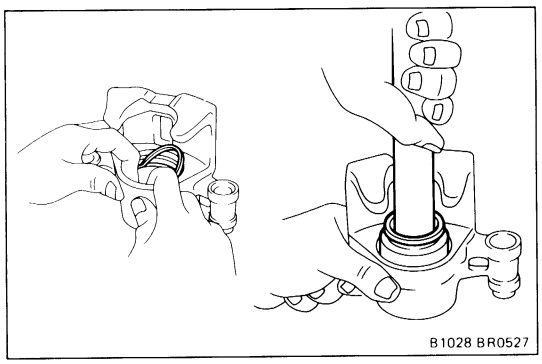

2. **INSTALL PISTON SEAL AND PISTON IN CYLINDER**

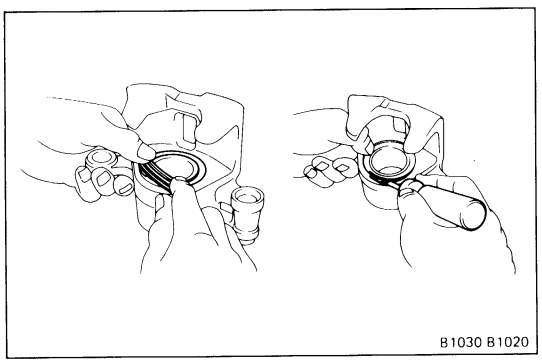

3. **INSTALL CYLINDER BOOT AND SET RING IN CYLINDER**

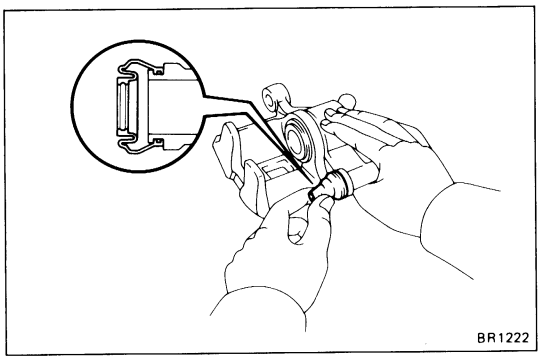

4. **INSTALL MAIN PIN BOOT**
   Push in the main pin boot.

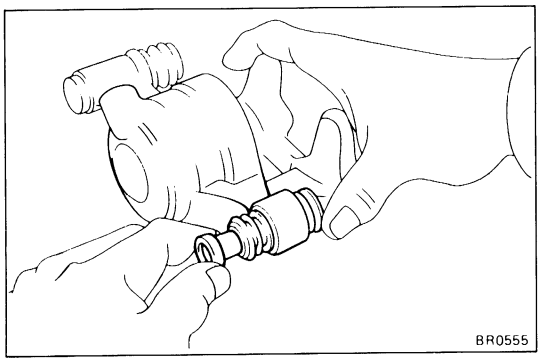

5. **INSTALL SLIDING BUSHING AND DUST BOOT**
   (a) Install the sliding bushing and dust boot into the brake cylinder.
   (b) Insure that the boot is secured firmly to the brake cylinder groove.

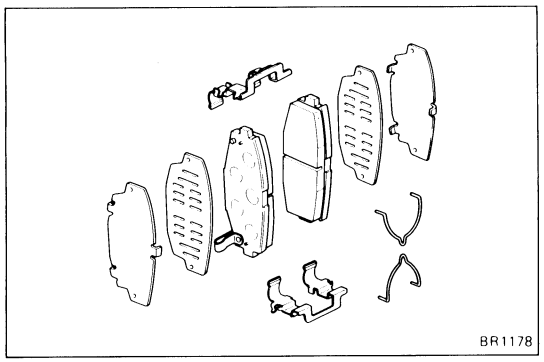

INSTALLATION OF CYLINDER
(See page BR-23)

1. **INSTALL PADS**
   (See step 8 to 9 on page BR-24 and 25)

2. **INSTALL CYLINDER**
   (See step 10 on page BR-25)

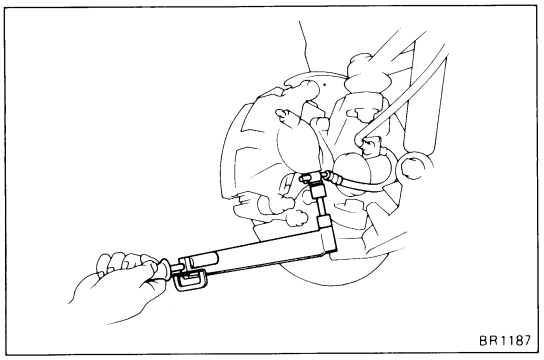

3. **INSTALL FLEXIBLE HOSE TO BRAKE CYLINDER**

   Set the flexible hose and new gaskets in position and install the union bolt.

   Torque: 310 kg-cm (22 ft-lb, 30 N·m)

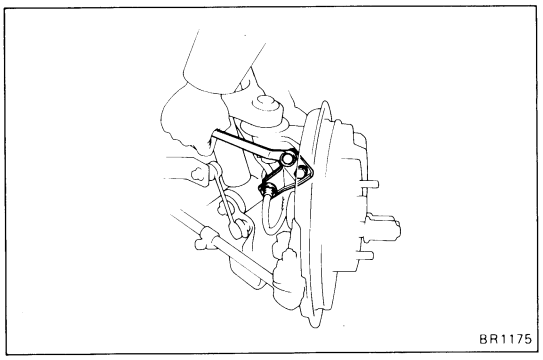

4. **INSTALL BRAKE HOSE BRACKET**

   Install the brake hose bracket and tighten the two bolts.

   Torque: 195 kg-cm (14 ft-lb, 19 N·m)

5. **FILL BRAKE RESERVOIR WITH BRAKE FLUID AND BLEED BRAKE SYSTEM**
   (See page BR-6)

6. **CHECK FOR LEAKS**

REAR BRAKE

Disc Brake

COMPONENTS

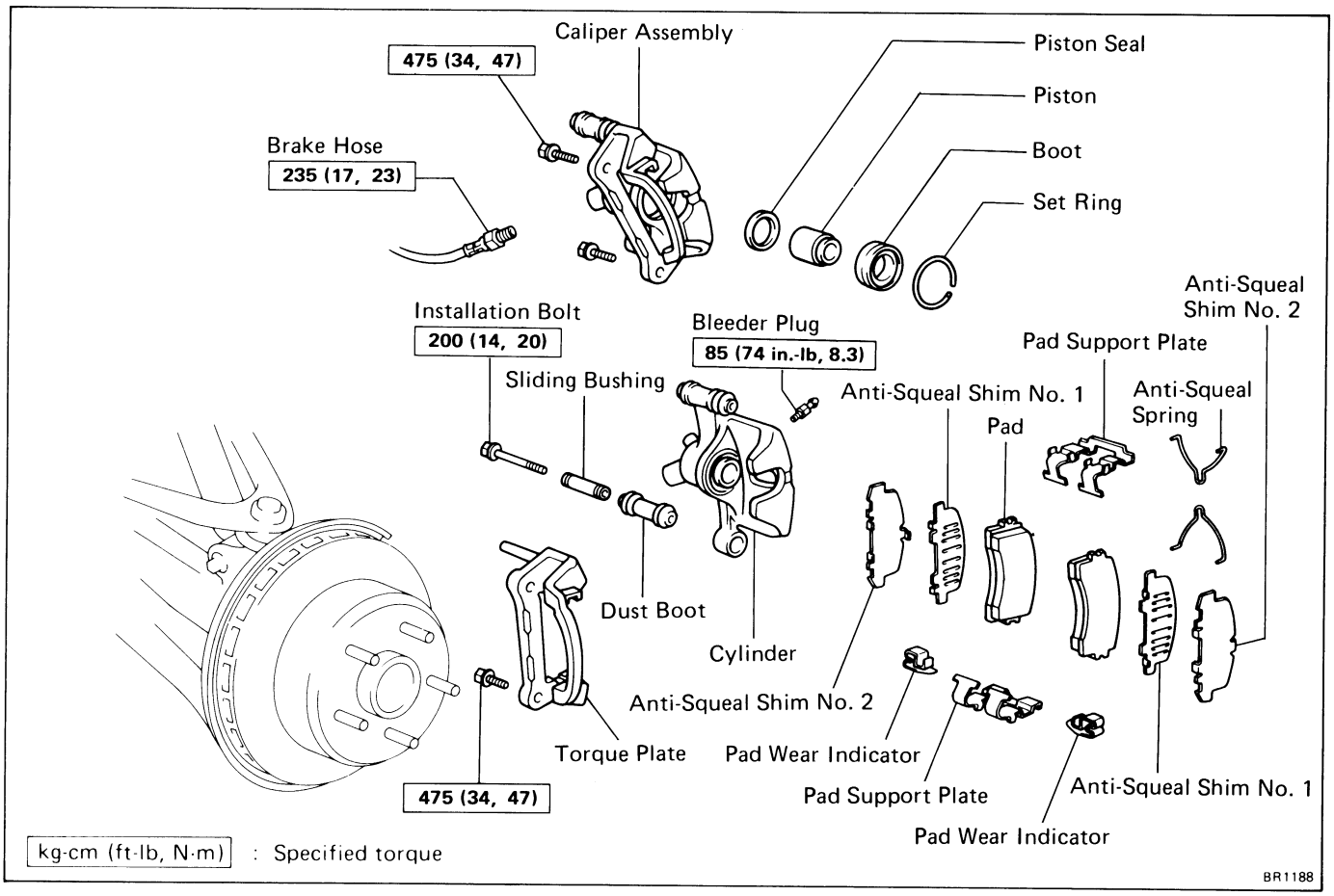

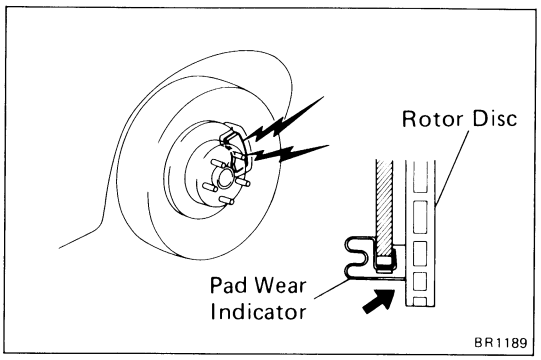

REPLACEMENT OF BRAKE PADS

If a squealing noise occurs while braking, inspect the brake pads.

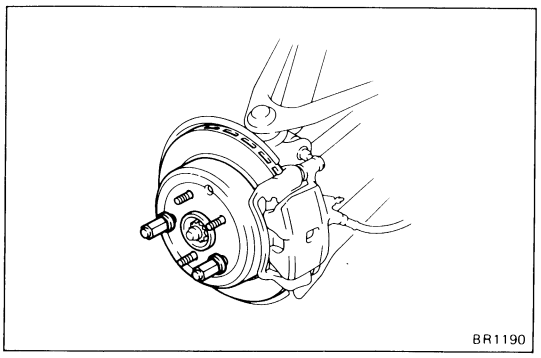

1. **REMOVE REAR WHEEL**

   Remove the wheel and temporarily fasten the rotor disc with the hub nuts.

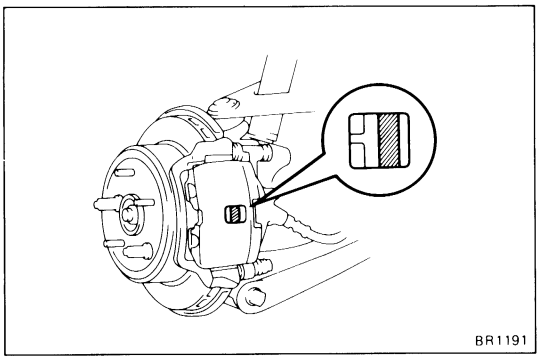

2. INSPECT PAD LINING THICKNESS

Check the pad thickness through the cylinder inspection hole and replace pads if not within specification.

Standard thickness: 10.0 mm (0.394 in.)
Minimum thickness: 1.0 mm (0.039 in.)

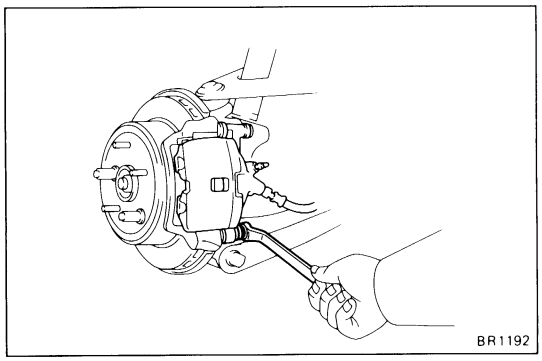

3. REMOVE CYLINDER FROM TORQUE PLATE

(a) Remove the installation bolt from the torque plate.

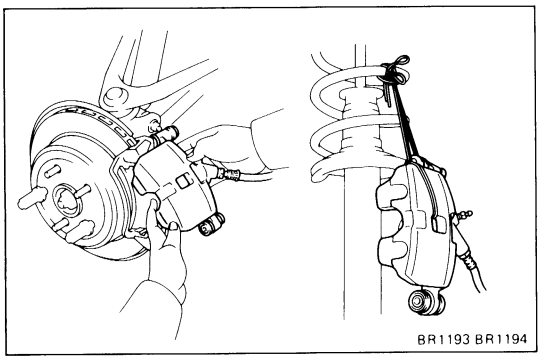

(b) Remove the brake cylinder and suspend it so the hose is not stretched.

HINT: Do not disconnect the brake hose.

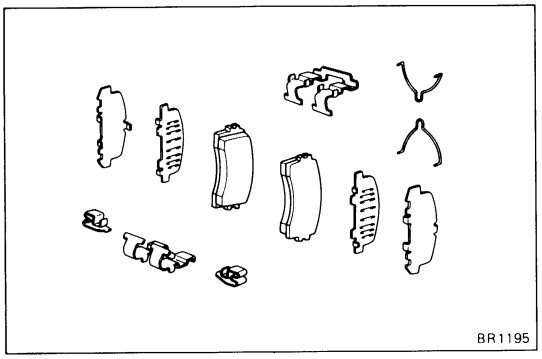

4. REMOVE FOLLOWING PARTS

(a) Two anti-squeal springs
(b) Two brake pads
(c) Four anti-squeal shims
(d) Two pad wear indicators
(e) Two pad support plates

5. CHECK ROTOR DISC THICKNESS
(See step 2 on page BR-36)

6. CHECK ROTOR DISC RUNOUT
(See step 3 on page BR-36)

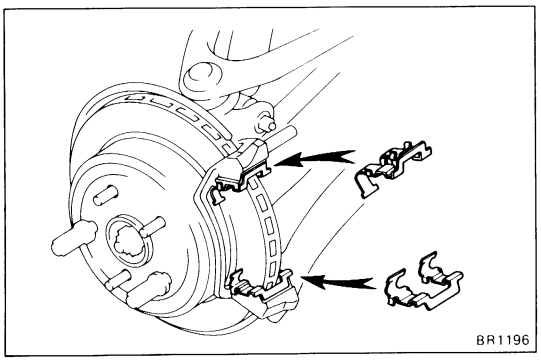

7. INSTALL TWO PAD SUPPORT PLATES

Install the two pad support plates to the torque plate.

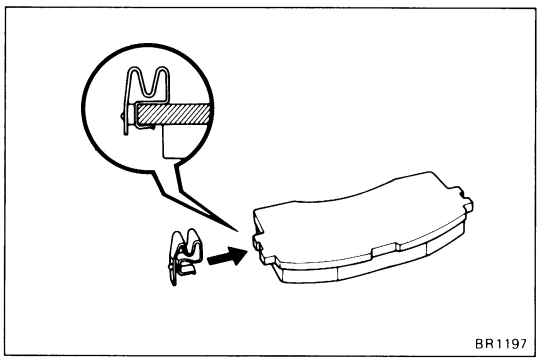

8. INSTALL NEW PADS

(a) Install the new pad wear indicators to the lower side of the pads.

(b) Install the anti-squeal shim No.1 to the pads.

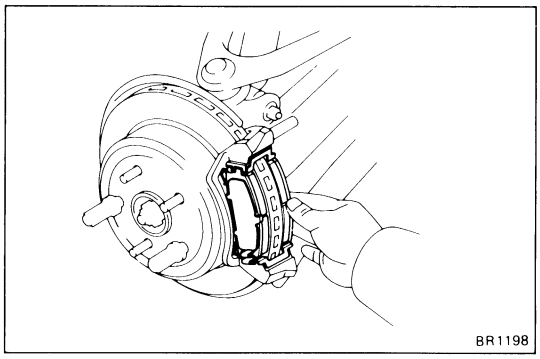

(c) Install the pads onto each pad support plate.

NOTE: Install the pads so the wear indicator is at the bottom side.

(d) Install the anti-squeal shim No.2 over shim No.1.

(e) Install the two anti-squeal springs.

NOTICE: Do not allow oil or grease to get on the rubbing face.

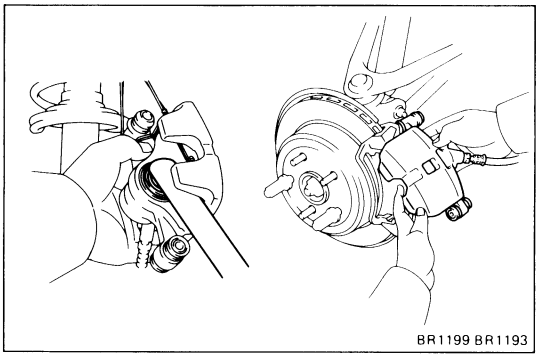

9. INSTALL CYLINDER

(a) Draw out a small amount of brake fluid from the reservoir.

(b) Press in piston with a hammer handle or an equivalent.

HINT: Always change the pad on one wheel at a time as there is a possibility of the opposite piston flying out.

(c) Insert the brake cylinder carefully so the boot is not wedged.

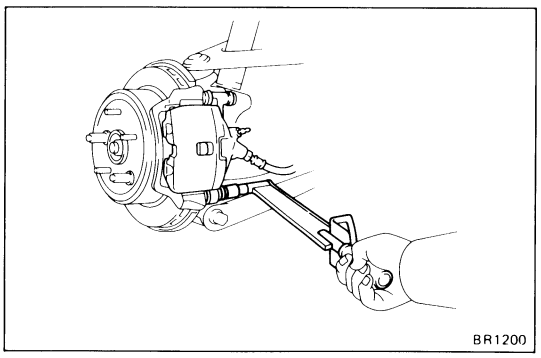

(d) Install and torque the installation bolt.

Torque: 200 kg-cm (14 ft-lb, 20 N·m)

10. INSTALL REAR WHEEL

11. CHECK THAT FLUID LEVEL IS AT MAX LINE

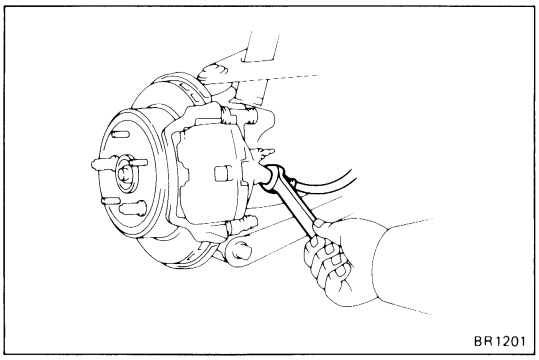

REMOVAL OF CYLINDER

(See page BR-31)

1. DISCONNECT BRAKE LINE

Disconnect the brake hose. Use a container to catch the brake fluid.

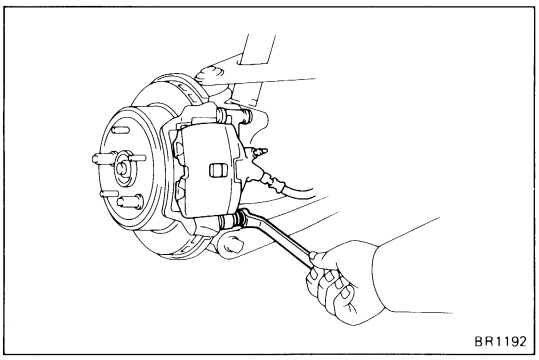

2. REMOVE CYLINDER FROM TORQUE PLATE

Remove the installation bolt and cylinder.

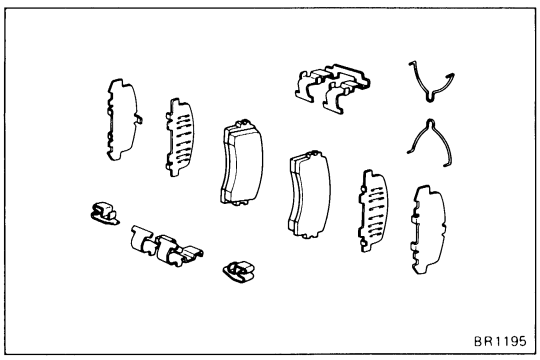

3. REMOVE PADS

(See step 4 on page BR-32)

DISASSEMBLY OF CYLINDER

(See page BR-31)

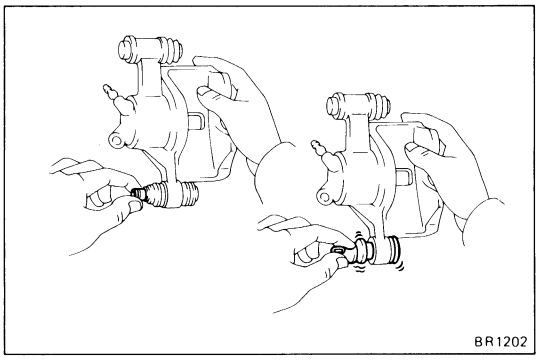

1. **REMOVE SLIDING BUSHING AND DUST BOOT**

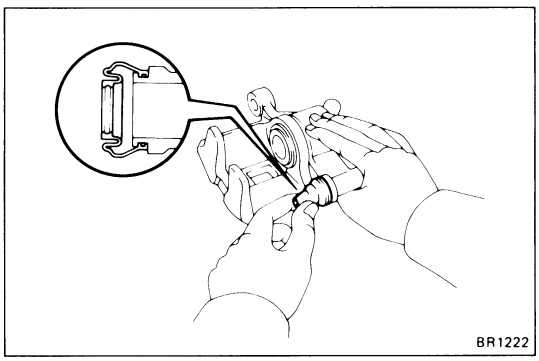

2. **REMOVE MAIN PIN BOOT**

   Pull out the main pin boot.

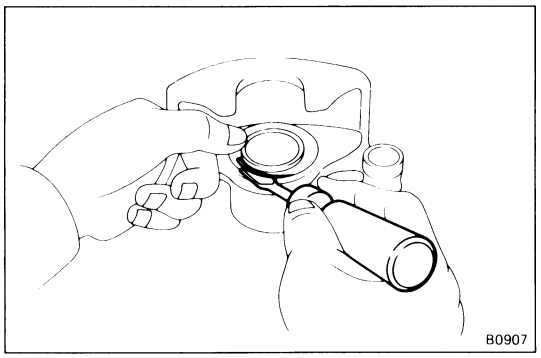

3. **REMOVE CYLINDER BOOT SET RING AND CYLINDER BOOT**

   Using a screwdriver, remove the cylinder boot set ring and cylinder boot.

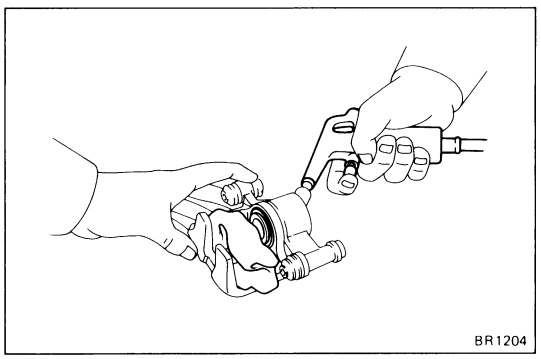

4. **REMOVE PISTON FROM CYLINDER**

   (a) Put a piece of cloth or an equivalent as shown.

   (b) Use compressed air to remove the piston from the cylinder.

   CAUTION: Do not place your fingers in front of the piston when using compressed air.

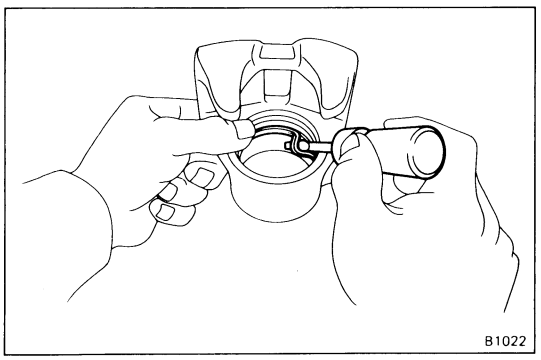

5. **REMOVE PISTON SEAL FROM BRAKE CYLINDER**

   Using a screwdriver, remove the piston seal.

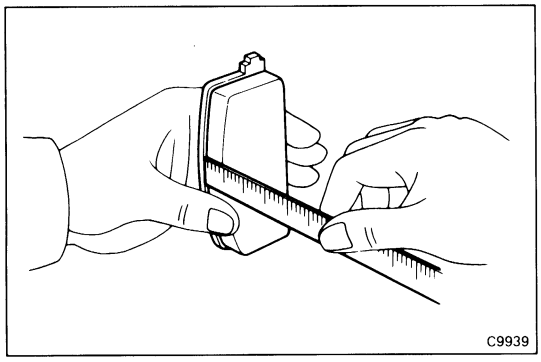

INSPECTION AND REPAIR OF REAR BRAKE COMPONENTS

1. MEASURE PAD LINING THICKNESS

Standard thickness: 10.0 mm (0.394 in.)
Minimum thickness: 1.0 mm (0.039 in.)

Replace the pad if the thickness is less than the minimum or if it shows sing of uneven wear.

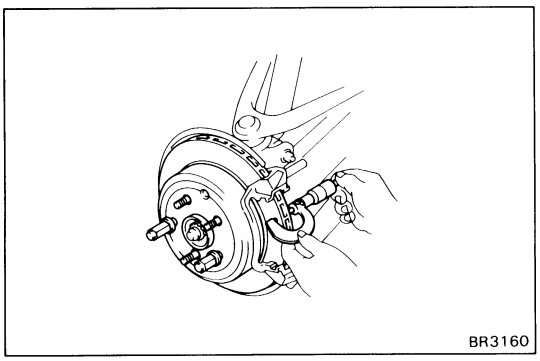

2. MEASURE ROTOR DISC THICKNESS

Standard thickness: 18.0 mm (0.709 in.)
Minimum thickness: 17.0 mm (0.669 in.)

If the disc is scored or worn, or if thickness is less than minimum, repair or replace the disc.

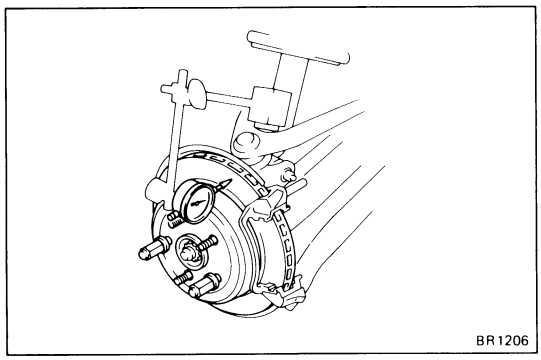

3. MEASURE ROTOR DISC RUNOUT

HINT: Before measuring the runout, confirm that the rear hub bearing play is within specification.
Measure the rotor disc runout at 10 mm (0.39 in.) from the outer edge of the rotor disc.

Maximum disc runout: 0.13 mm (0.0051 in.)

If the runout is greater than the maximum, inspect and adjust following the procedure listed below.

Then replace the disc if necessary.

(a) Remove the torque plate from the rear carrier.

(b) Remove the hub nuts of the temporarily installed disc and pull off the rotor disc.

(c) Check that the axle shaft axial play is within specification, and replace the bearing if not within specification.
(See page RA-6)

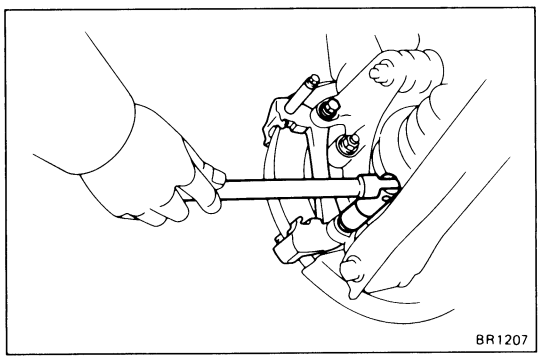

(d) Install the rotor disc and measure the disc runout, then shift the rotor disc one fifth a turn and measure the disc runout. Similarly measure the runout in each position, and select the position where the runout is minimum.

(e) In this position, if the runout is within specification, install the torque plate and torque the mounting bolts.

Torque: 475 kg-cm (34 ft-lb, 47 N·m)

(f) If not within specification, replace the rotor disc.

(g) Remove the parking brake shoe, and inspect the parking brake lining and the new rotor disc for proper contact.
(See page BR-39 to 41)

(h) Install the parking brake shoe and rotor.
(See page BR-43)

(i) Repeat (d) and (e).

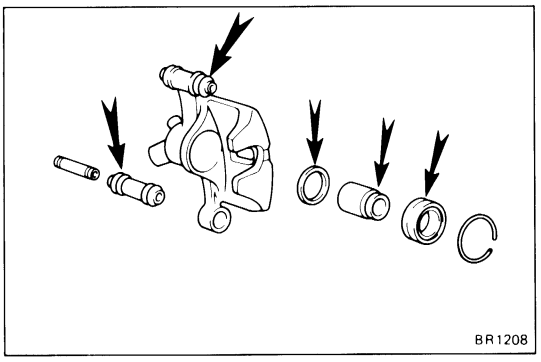

ASSEMBLY OF CYLINDER

(See page BR-31)

1. APPLY LITHIUM SOAP BASE GLYCOL GREASE TO FOLLOWING PARTS

(a) Main pin boot

(b) Sliding bushing and boot

(c) Piston, piston seal and cylinder boot

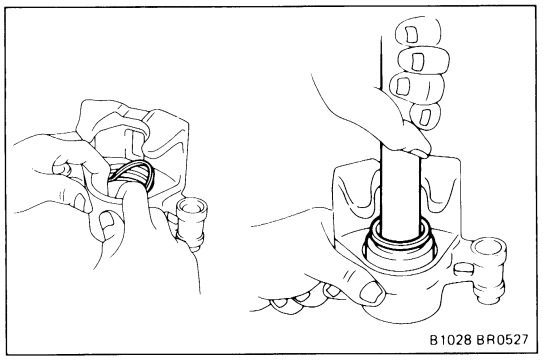

2. INSTALL PISTON SEAL AND PISTON IN CYLINDER

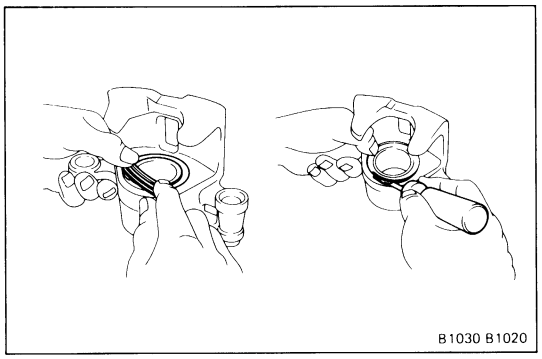

3. INSTALL CYLINDER BOOT AND SET RING IN CYLINDER

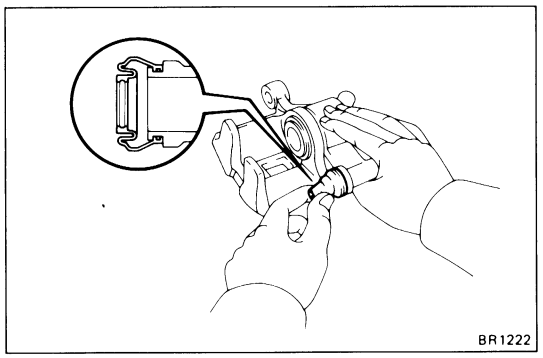

4. INSTALL MAIN PIN BOOT

Push in the main pin boot.

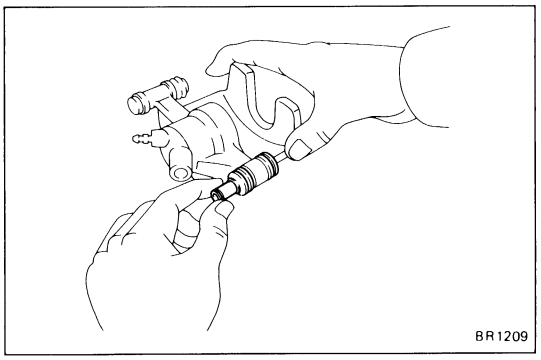

5. INSTALL SLIDING BUSHING AND DUST BOOT

(a) Install the sliding bushing and dust boot into the brake cylinder.

(b) Insure that the boot is secured firmly to the brake cylinder groove.

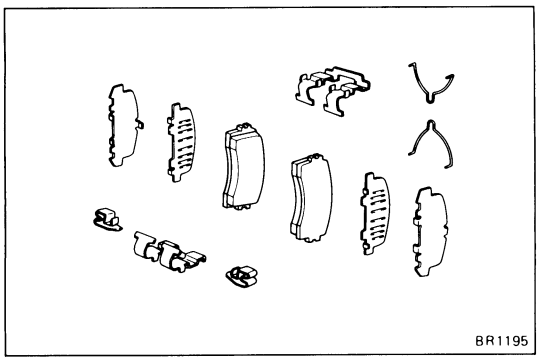

INSTALLATION OF CYLINDER
(See page BR-31)

1. **INSTALL PADS**
   (See step 7 to 8 on page BR-32 and 33)

2. **INSTALL CYLINDER**
   (See step 9 on page BR-33)

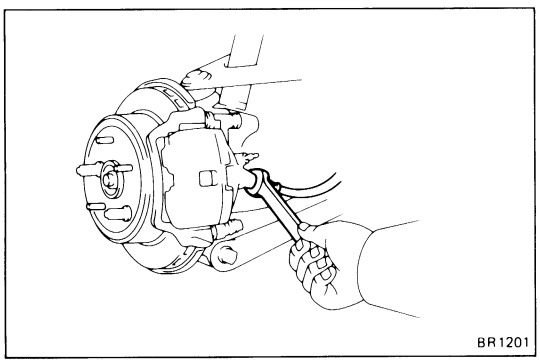

3. **INSTALL FLEXIBLE HOSE TO BRAKE CYLINDER**
   Torque: 235 kg-cm (17 ft-lb, 23 N·m)

4. **FILL BRAKE RESERVOIR WITH BRAKE FLUID AND BLEED BRAKE SYSTEM**
   (See page BR-6)

5. **CHECK FOR LEAKS**

Parking Brake

COMPONENTS

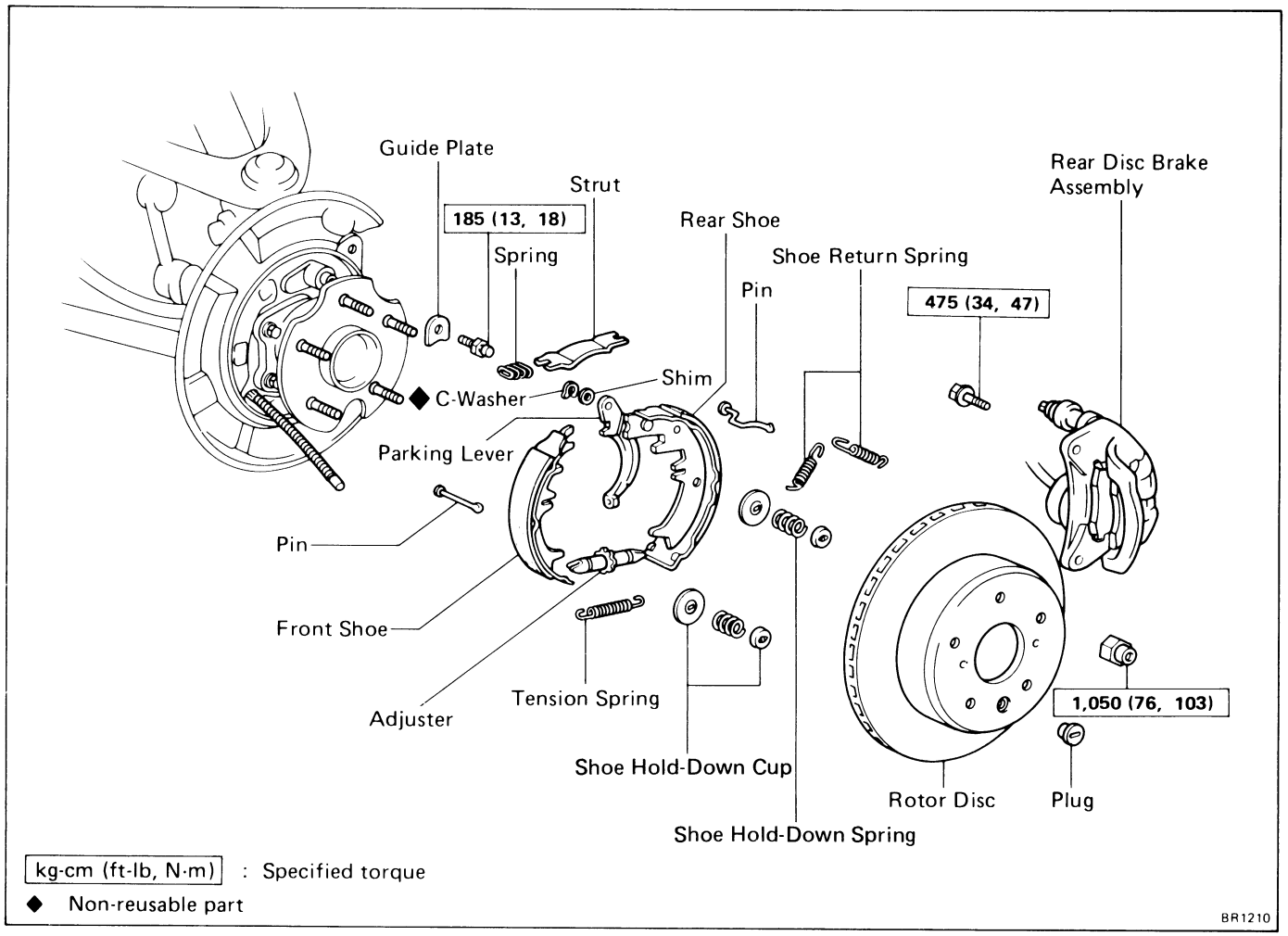

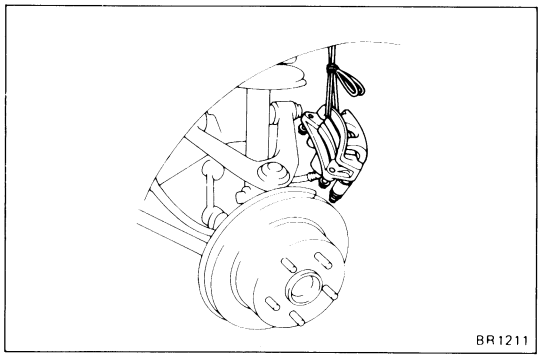

DISASSEMBLY OF PARKING BRAKE

1. REMOVE REAR DISC BRAKE ASSEMBLY

(a) Remove the two mounting bolts and remove the disc brake assembly.

(b) Suspend the disc brake so the hose is not stretched.

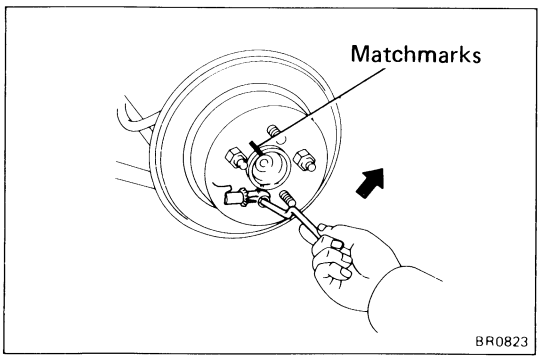

2. REMOVE ROTOR DISC

Place the matchmarks on the rotor disc and rear axle shaft, and remove the rotor disc.

HINT: If the drum cannot be removed easily, return the shoe adjuster until the wheel turns freely.

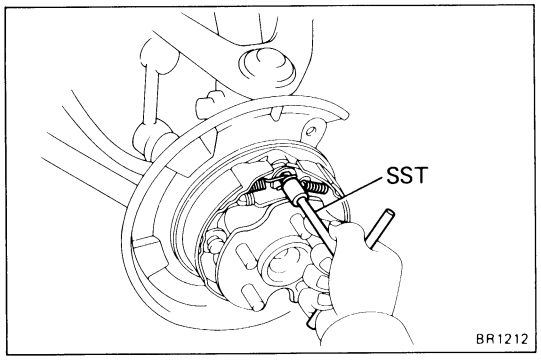

3. REMOVE SHOE RETURN SPRINGS

Using SST, remove the shoe return springs.

SST 09717-20010

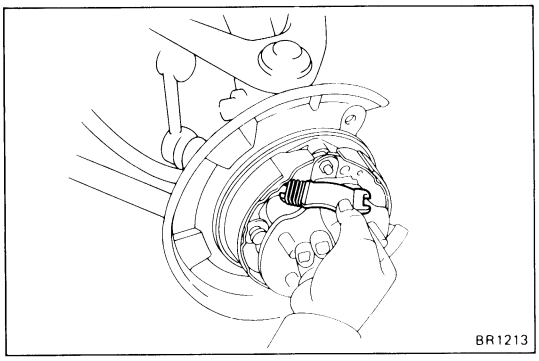

4. REMOVE SHOE STRUT WITH SPRING

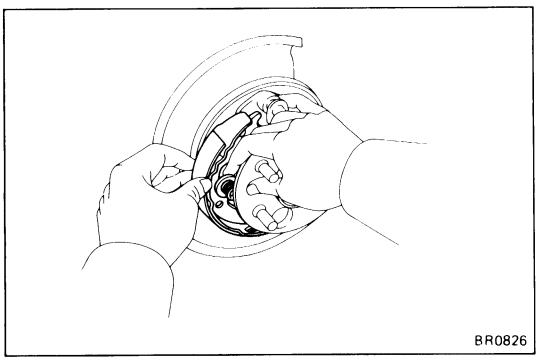

5. REMOVE FRONT SHOE, ADJUSTER AND TENSION SPRING

(a) Slide out the front shoe and remove the shoe adjuster.

(b) Disconnect the tension spring and remove the front shoe.

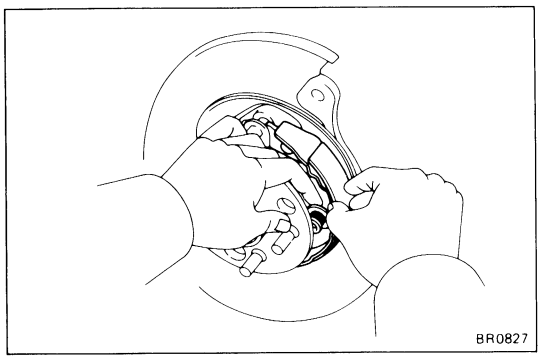

6. REMOVE REAR SHOE

(a) Slide out the rear shoe.

(b) Remove the tension spring from the rear shoe.

(c) Disconnect the parking brake cable from the parking brake shoe lever.

(d) Remove the shoe hold-down spring cups, springs and pins.

INSPECTION AND REPAIR OF PARKING BRAKE COMPONENTS

1. INSPECT DISASSEMBLED PARTS

Inspect the disassembled parts for wear, rust or damage.

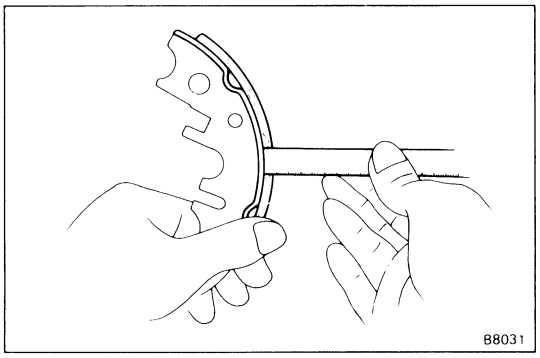

2. MEASURE BRAKE SHOE LINING THICKNESS

Standard thickness: 2.5 mm (0.098 in.)
Minimum thickness: 1.0 mm (0.039 in.)

If the shoe lining is less than minimum or shows signs of uneven wear, replace the parking brake shoes.

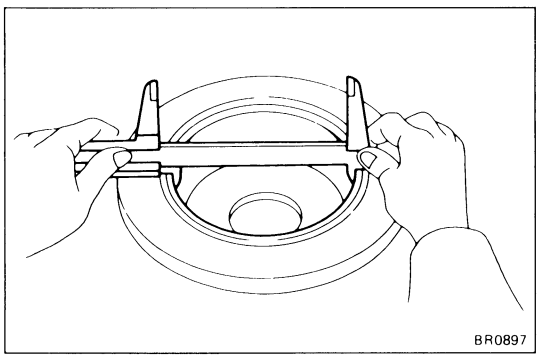

3. MEASURE BRAKE DISC INSIDE DIAMETER

Standard inside diameter: 190 mm (7.48 in.)
Maximum inside diameter: 191 mm (7.52 in.)

If the disc is scored or worn, the brake disc may be lathed to the maximum inside diameter.

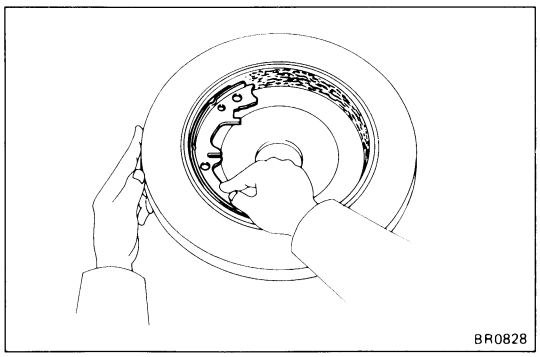

4. INSPECT PARKING BRAKE LINING AND DISC FOR PROPER CONTACT

If the contact between the brake lining and disc is improper, repair the lining with a brake shoe grinder, or replace the brake shoe assembly.

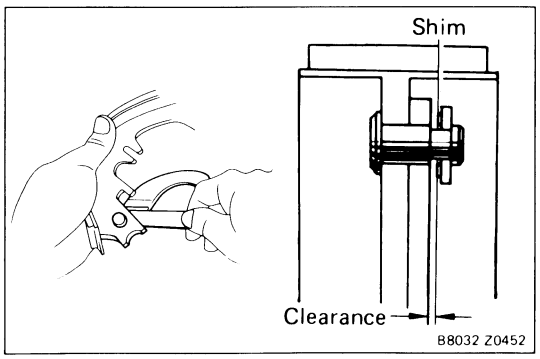

5. MEASURE CLEARANCE BETWEEN PARKING BRAKE SHOE AND LEVER

Using a feeler gauge, measure the clearance.

Standard clearance: Less than 0.35 mm (0.0138 in.)

If the clearance is not within specification, replace the shim with one of the correct size.

Thickness mm (in.)	
0.3 (0.012) 0.6 (0.024)	0.9 (0.035)

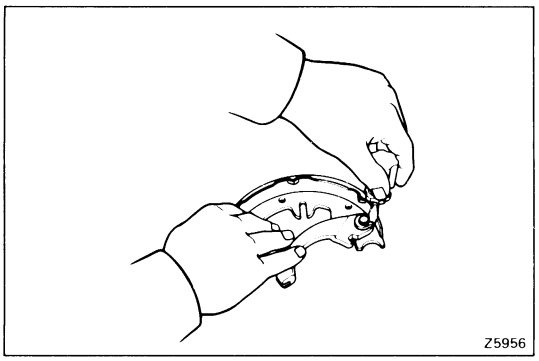

6. IF NECESSARY, REPLACE SHIM

(a) Remove the parking brake lever, and install the correct size shim.

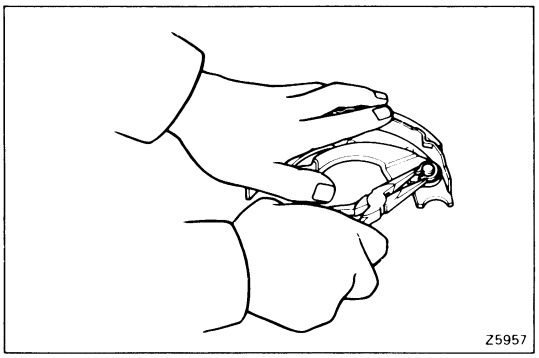

(b) Install the parking brake lever with a new C- washer.

(c) Remeasure the clearance.

ASSEMBLY OF PARKING BRAKE

(See page BR-39)

HINT: Assemble the parts in the correct direction as shown.

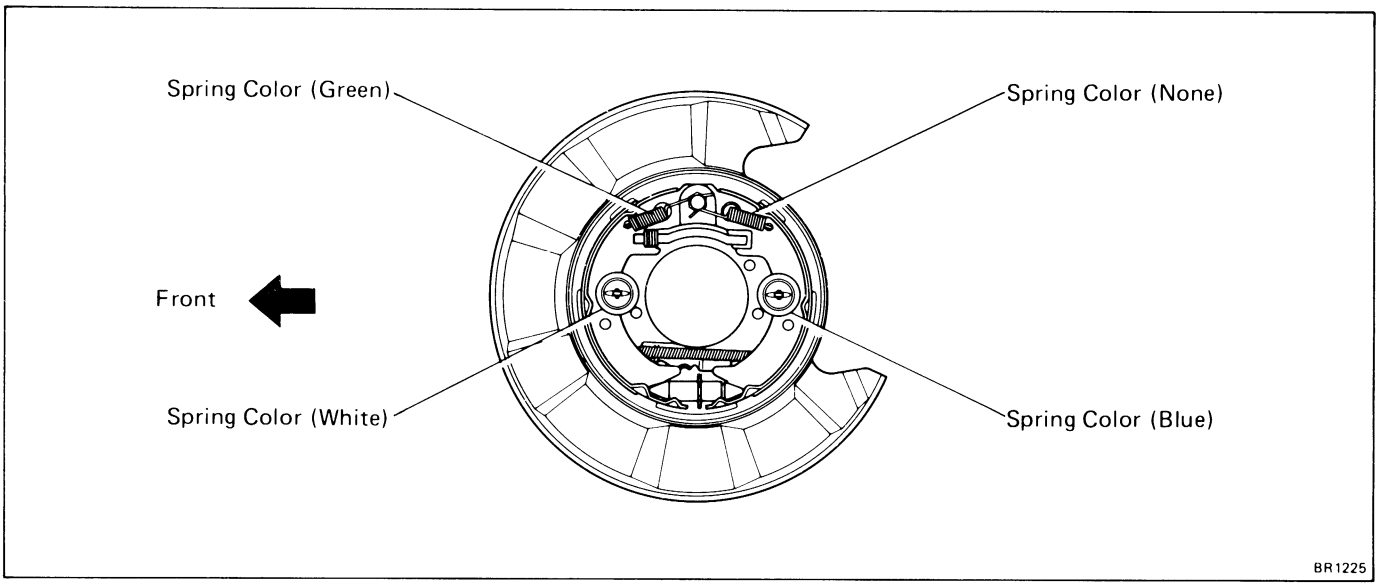

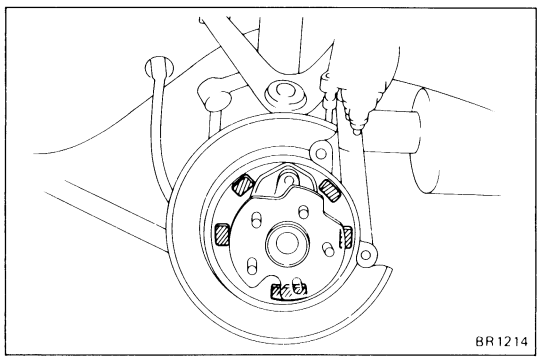

1. APPLY HIGH TEMPERATURE GREASE ON BACKING PLATE AS SHOWN

Apply high temperature grease to the sliding surfaces of the shoe.

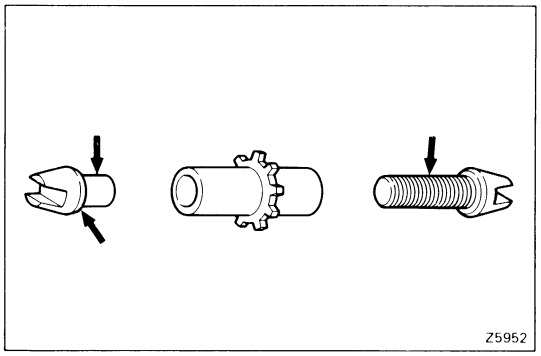

2. APPLY HIGH TEMPERATURE GREASE TO ADJUSTER AS SHOWN

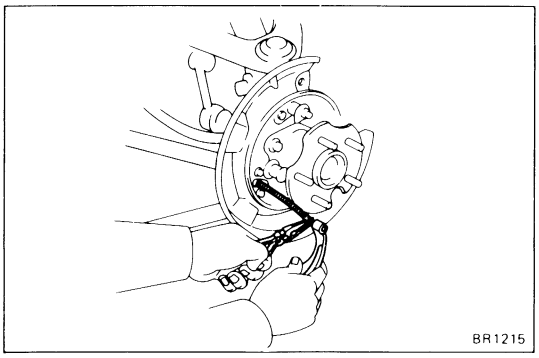

3. CONNECT PARKING BRAKE CABLE TO PARKING BRAKE LEVER

(a) Install the shoe hold-down springs, cups and pins.

(b) Connect the parking brake cable to the parking brake lever of the rear shoe.

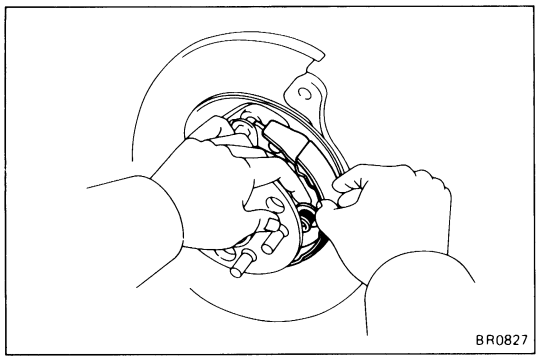

4. INSTALL REAR SHOE

Slide in the rear shoe between the shoe hold-down spring cup and the backing plate, and check that the parking brake cable is properly hooked in the cable guide.

CAUTION: Do not allow oil or grease to get on the rubbing face.

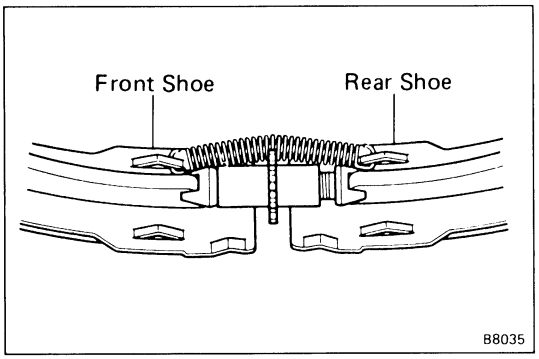

5. INSTALL TENSION SPRING, FRONT SHOE AND ADJUSTER

(a) Install the tension spring to the rear shoe.

(b) Install the front shoe to the tension spring.

(c) Install the adjuster between the front and rear shoes.

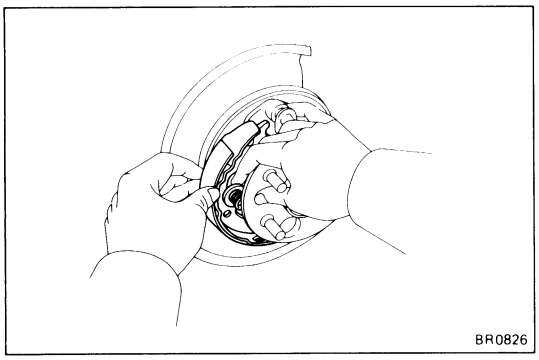

(d) Slide in the front shoe between the shoe hold-down spring cup and the backing plate.

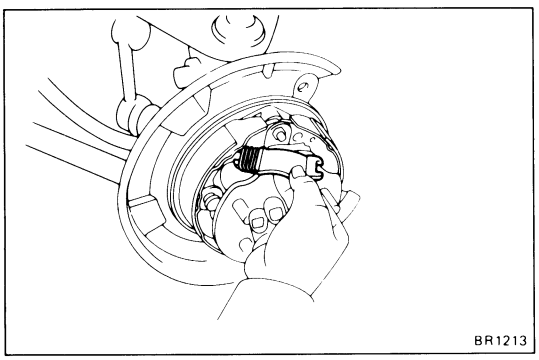

6. INSTALL STRUT WITH SPRING

Install the strut with the spring forward.

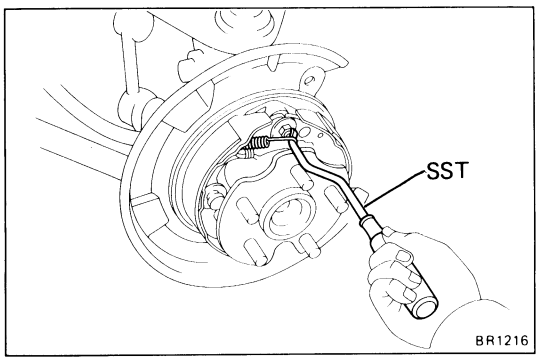

7. INSTALL SHOE RETURN SPRINGS

Using SST, install the front return spring and then install the rear return spring.

SST 09718-20010

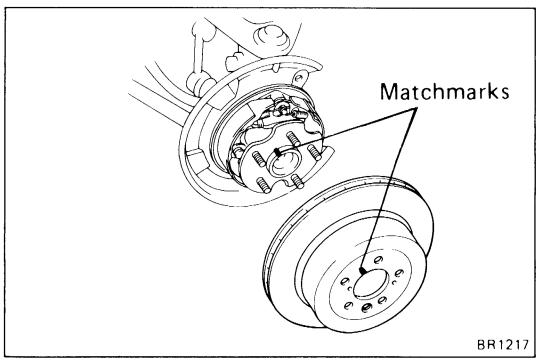

8. INSTALL ROTOR DISC

(a) Before installing, polish the disc and shoe surfaces with sandpaper.

(b) Align the matchmarks and install the rotor disc.

HINT: If there is no matchmarks, temporarily install the rotor disc and measure the rotor disc runout and install the rotor disc in best position. (See step 3 on page BR-36)

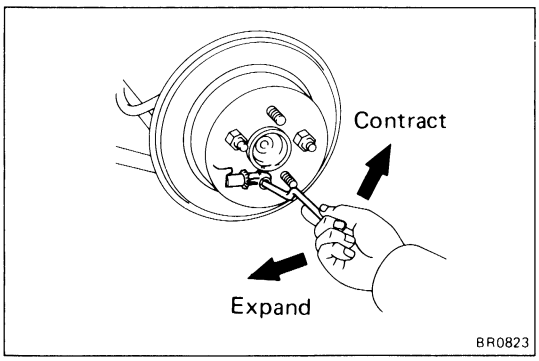

9. ADJUST PARKING BRAKE SHOE CLEARANCE

(a) Temporarily install the hub nuts.

(b) Remove the hole plug.

(c) Turn the adjuster and expand the shoes until the rotor disc locks.

(d) Return the adjuster eight notches.

(e) Install the hole plug.

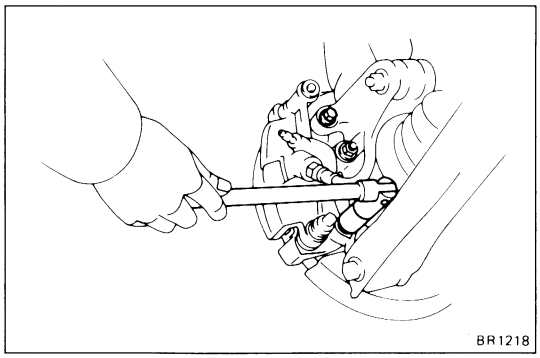

10. INSTALL REAR DISC BRAKE ASSEMBLY

Install the disc brake and torque the two mounting bolts.

Torque: 475 kg-cm (34 ft-lb, 47 N·m)

11. INSTALL REAR WHEEL

12. BEDDING DOWN PARKING BRAKE SHOES AND DISC

(a) Drive the vehicle at about 50 km/h (31 mph) on a safe, level and dry road.

(b) With the parking brake release button pushed in, pull on the lever with 9 kg (19.8 lb, 88 N) of force.

(c) Drive the vehicle for about 400 meters (0.25 mile) in this condition.

(d) Repeat this procedure two or three times.

13. RECHECK AND ADJUST PARKING BRAKE LEVER TRAVEL (See page BR-7)

ANTI-LOCK BRAKE SYSTEM (A.B.S.)

Description

- The A.B.S. is a brake system which controls the wheel cylinder hydraulic pressure of all four wheels during sudden braking and braking on slippery road surfaces, preventing the wheels from locking. This A.B.S. provides the following benefits:
  (1) Enables steering round an obstacle with a greater degree of certainty even when panic braking.
  (2) Enables stopping in a panic brake while keeping the effect upon stability and steerability to a minimum, even on curves.
- The function of the A.B.S. is to help maintain directional stability and vehicle steerability on most road conditions. However, the system cannot prevent the vehicle from skidding if the cornering speed limit is exceeded.
- In case a malfunction occurs, a diagnosis function and fail-safe system have been adopted for the A.B.S. to increase serviceability.

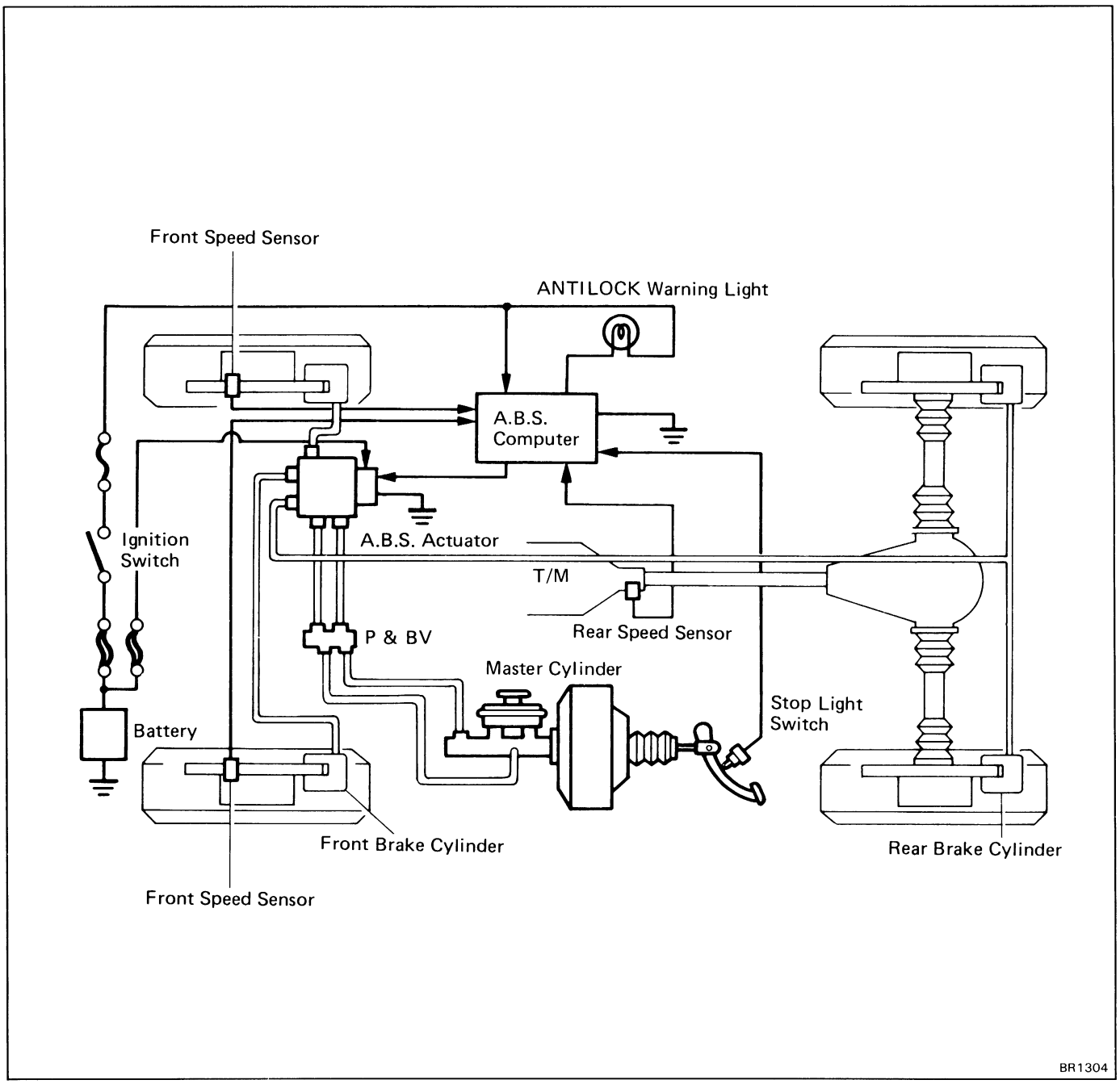

FUNCTION OF COMPONENTS

Component	Function
Front Speed Sensor	Detects the wheel speed of each of the left and right front wheels.
Rear Speed Sensor	Detects the average wheel speed of the left and right rear wheels.
ANTILOCK Warning Light	Lights up to alert the driver when trouble has occured in the Anti-lock Brake System.
A.B.S. Actuator	Controls the brake fluid pressure to each disc brake cylinder through signals from the computer.
Anti-lock Brake System Computer	From the wheel speed signals from each sensor, it calculates acceleration, deceleration and slip values and sends signals to the actuator to control brake fluid pressure.

LOCATION OF SYSTEM PARTS

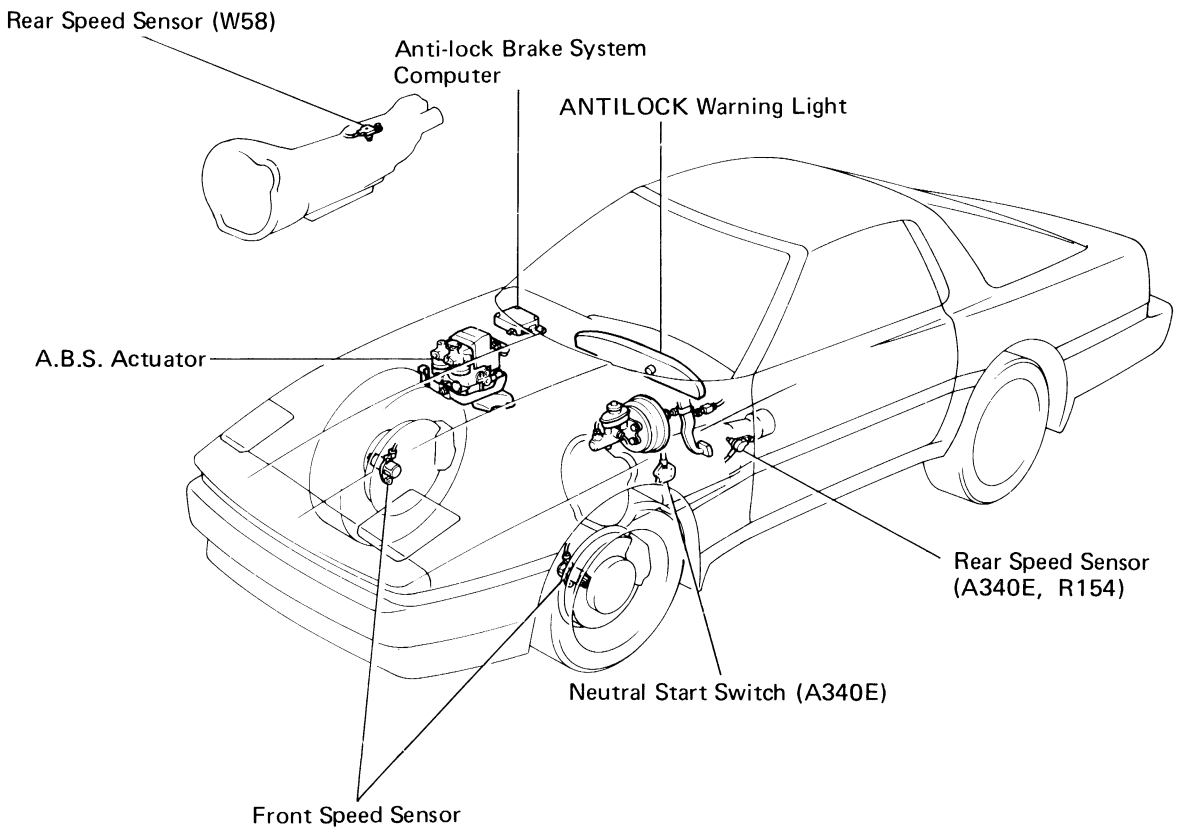

BR3161

SYSTEM DIAGRAM

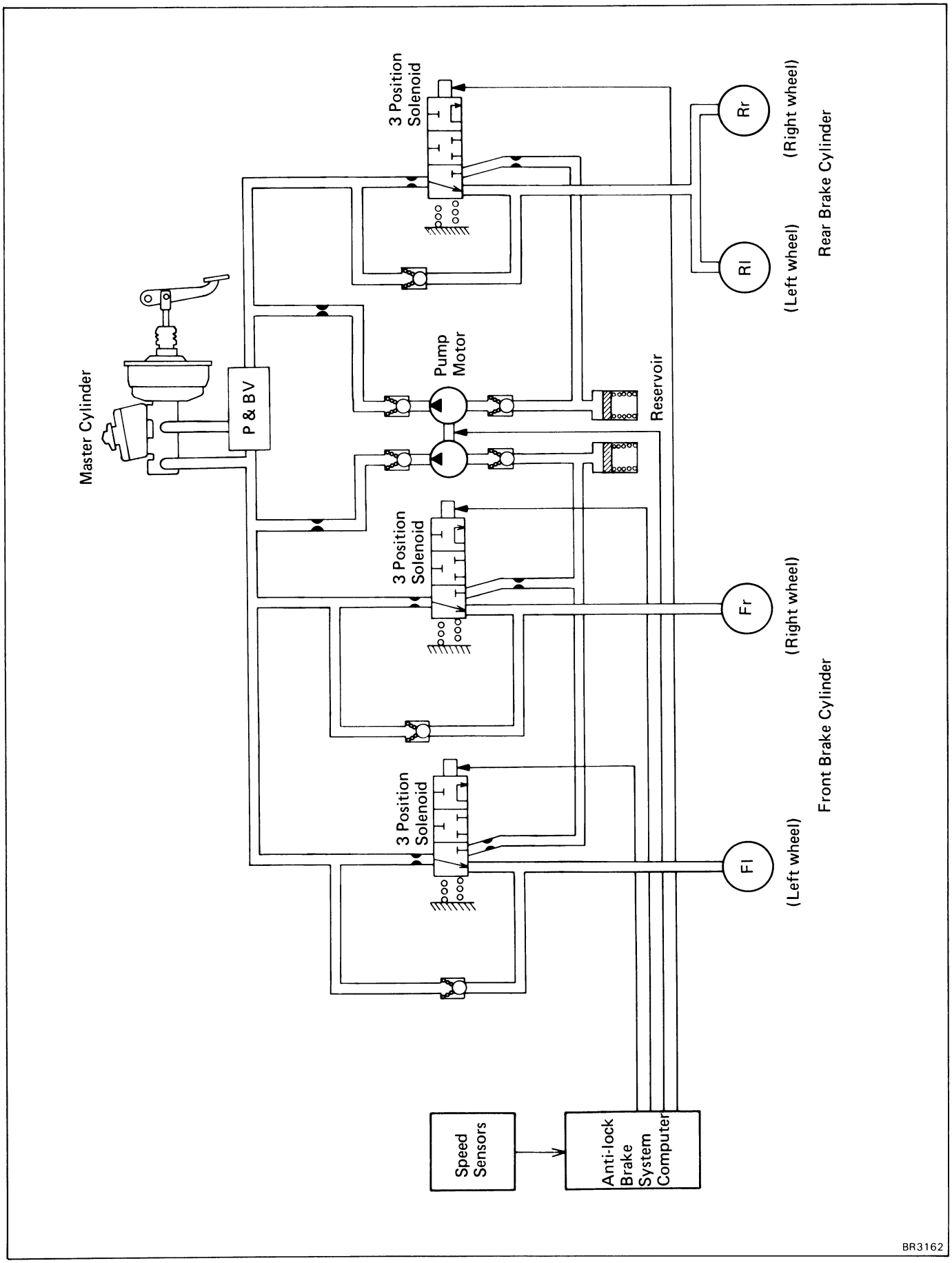

WIRING DIAGRAM

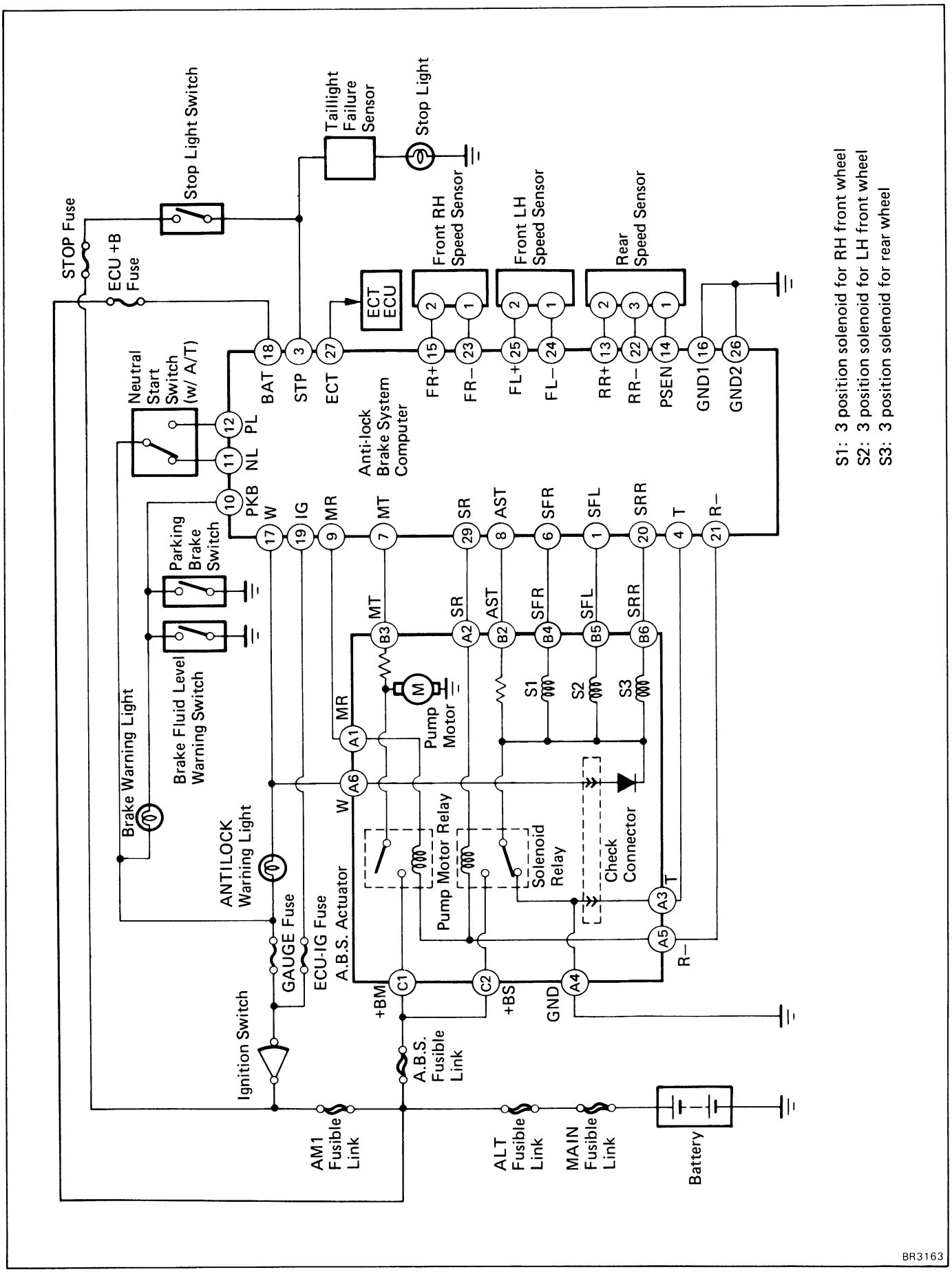

CONNECTORS

A.B.S. Actuator

CONNECTOR A

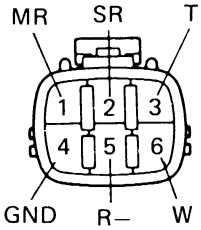

CONNECTOR B

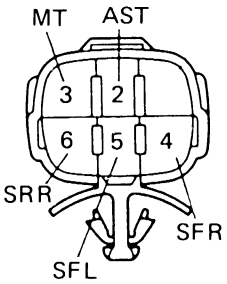

CONNECTOR C

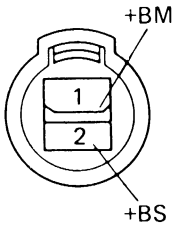

Rear Speed Sensor (A/T)

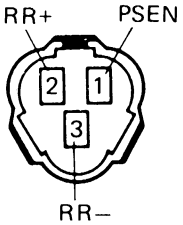

Front Speed Sensor (LH)

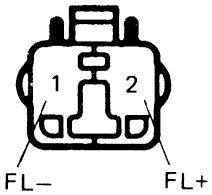

Front Speed Sensor (RH)

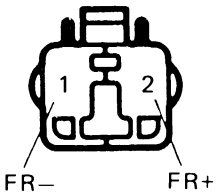

Rear Speed Sensor (M/T)

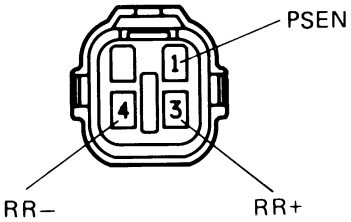

Anti-lock Brake System Computer

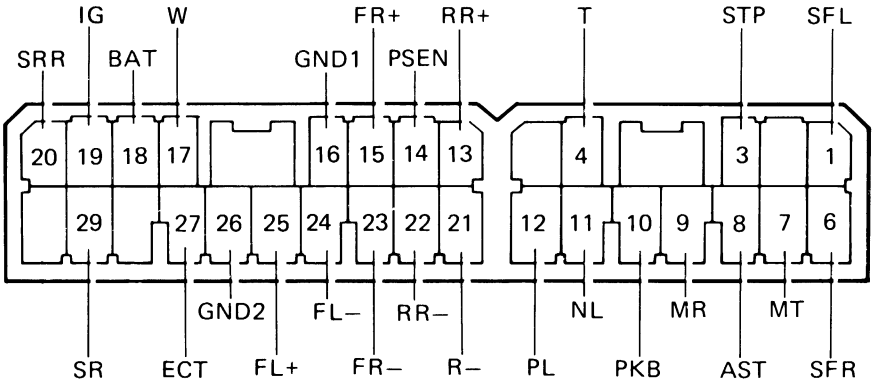

E2401 E2402 ID-2-2
IS-3-2-A
IS-2-1-0 IS-2-1-0 IS-4-2
E2403

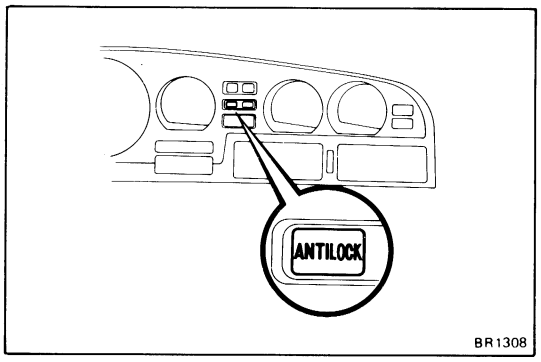

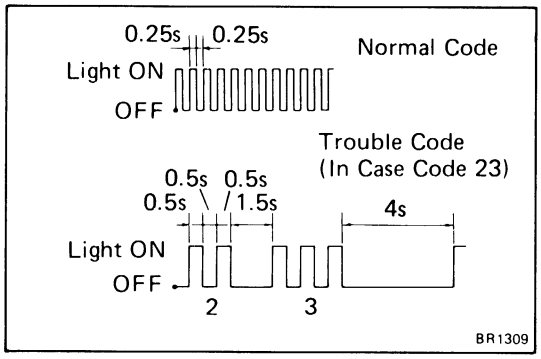

Diagnosis System

DESCRIPTION

If a malfunction occurs, the system will identify the problem and the computer will store the codes for the trouble items.
At the same time, the system informs the driver of a malfunction via the "ANTILOCK" warning light in the combination meter.
By turning on the ignition switch and disconnecting the actuator check connecter, the trouble can be identified by the number of blinks (diagnostic code) of the warning light.
In the event of two codes, that having the smallest number (code) will be identified first.

HINT: The warning light does not show the diagnostic codes while the vehicle running.

INITIAL CHECK

CHECK ACTUATOR OPERATION NOISE

(a) Start the engine and drive at a speed over 6 km/h (4 mph).

(b) Check that the actuator operation noise is heard.

NOTE: A initial check is carried out once each time after the engine has been started and initial speed exceeds 6 km/h (4 mph). The respective functions, in order, of the 3 position solenoids and pump motor in the actuator are checked. However, if the brake pedal is depressed, the initial check is not carried out.

INSPECTION OF DIAGNOSIS SYSTEM

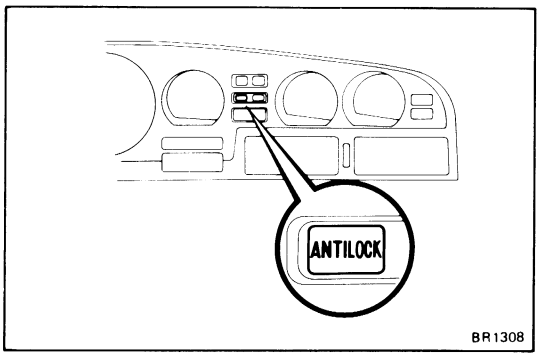

1. INSPECT BATTERY VOLTAGE

Inspect that the battery voltage is about 12 V.

2. CHECK THAT WARNING LIGHT TURNS ON

(a) Turn the ignition switch on.

(b) Check that the "ANTILOCK" warning light turns on for 3 seconds.

If not, inspect and repair or replace the fuse, bulb and wire harness.

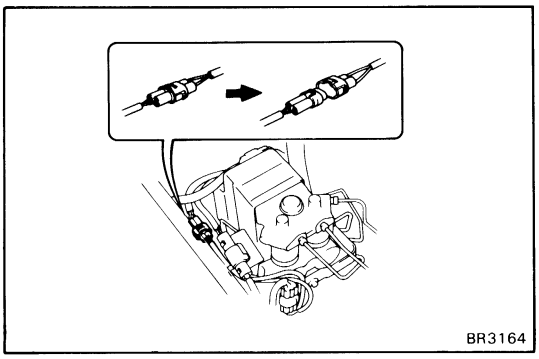

3. READ DIAGNOSTIC CODE

(a) Turn the ignition switch on.

(b) Disconnect the actuator check connecter.

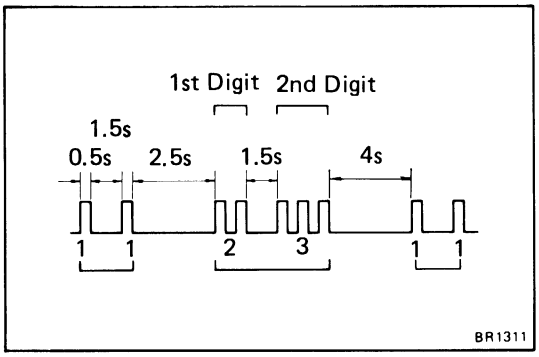

(c) In event of a malfunction, 4 seconds later the warning light will begin to blink. Read the number of blinks. (See DIAGNOSTIC CODE on page BR-53)

HINT: The first number of blinks will equal the first digit of a two digit diagnostic code. After a 1.5 second pause, the 2nd number of blinks will equal the 2nd number of a two digit code. If there are two or more codes, there will be a 2.5 second pause between each, and indication will begin after 4.0 seconds pause from the smaller value and continue in order to larger.

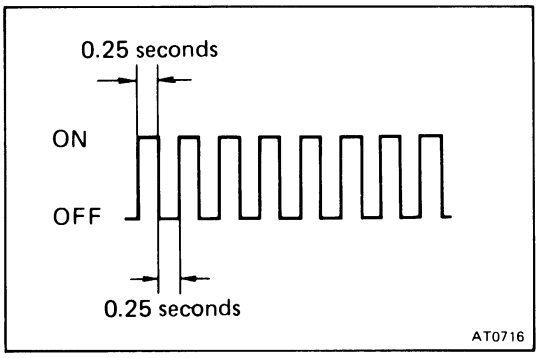

(d) If the system is operating normally (no malfunction), the warning light will blink once every 0.5 seconds.

(e) Repair the system.

(f) After the malfunctioning components has been repaired, clear the diagnostic codes stored in the computer.
(See page BR-54)

HINT: If you disconnect the battery cable while repairing, all diagnostic codes in the computer will erased.

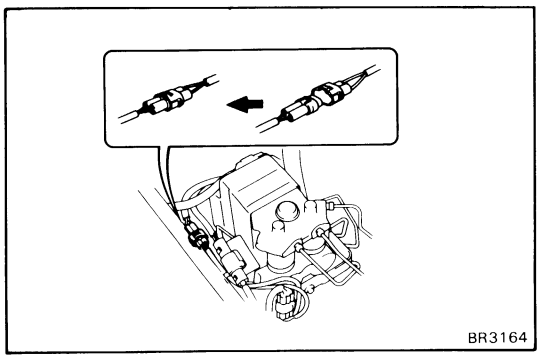

(g) Connect the actuator check connecter.

(h) Turn the ignition switch on, and check that the "ANTILOCK" warning light goes off after the warning light goes on for 3 seconds.

DIAGNOSTIC CODE

Code No.	Light Pattern	Diagnosis	Trouble Area
11	ON / OFF	Open circuit in solenoid relay	• Actuator inside wire harness • Solenoid relay • Wire harness and connector of solenoid relay circuit
12		Short circuit in solenoid relay	
13		Open circuit in pump motor relay	• Actuator inside wire harness • Pump motor relay • Wire harness and connector of pump motor relay circuit
14		Short circuit in pump motor relay	
21		Open or short circuit in 3 position solenoid of right front wheel	• Actuator solenoid • Wire harness and connector of actuator solenoid circuit
22		Open or short circuit in 3 position solenoid of left front wheel	
23		Open or short circuit in 3 position solenoid of rear wheel	
31		Right front wheel speed sensor signal malfunction	• Speed sensor • Sensor rotor • Wire harness and connector of speed sensor
32		Left front wheel speed sensor signal malfunction	
33		Rear wheel speed sensor signal malfunction	
34		Open circuit in front speed sensor	
41		Low battery voltage (9.5 V or lower)	• Battery • Voltage regulator
42		Abnormally high battery voltage (17.2 V or higher)	
51		Pump motor of actuator locked or open circuit in pump motor circuit of actuator	• Pump motor, relay and battery • Wire harness, connector and ground bolt of actuator pump motor circuit
Always on		Malfunction in computer	• Computer

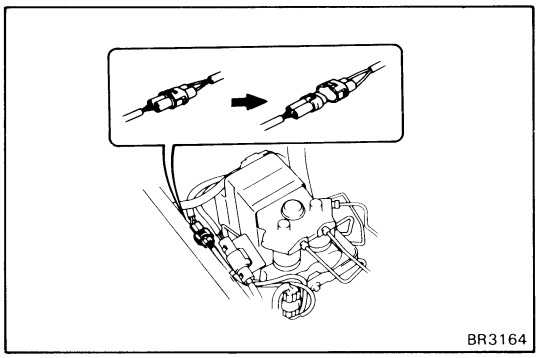

CLEARING OF DIAGNOSTIC CODES

CLEAR DIAGNOSTIC CODES

(a) Turn the ignition switch on.

(b) Disconnect the actuator check connector.

HINT: Keep the vehicle stopped (vehicle speed 0 km/h (0 mph)).

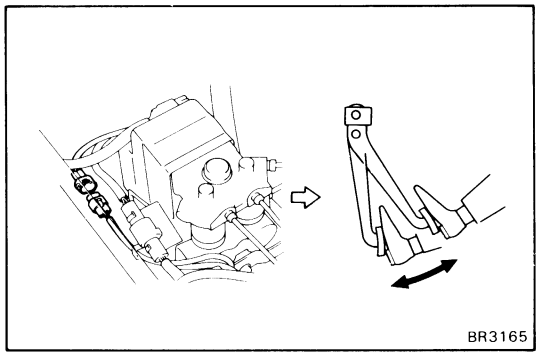

(c) Clear the diagnostic codes stored in computer by depressing the brake pedal 8 or more times within 3 seconds.

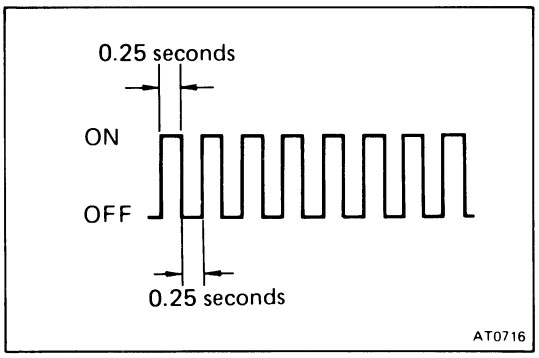

(d) Check that the warning light shows the normal code.

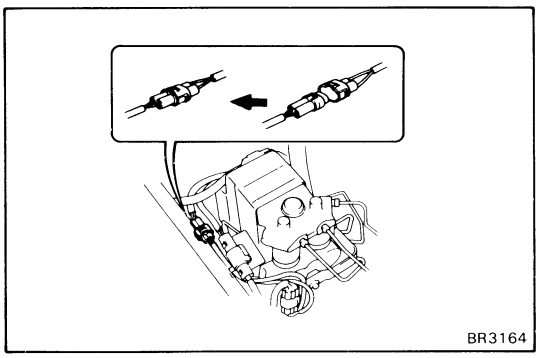

(e) Connect the actuator check connector.

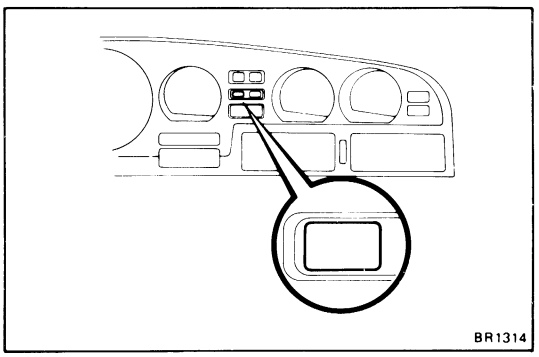

(f) Check that the warning light goes off.

Troubleshooting

Problem		No.
"ANTILOCK" warning light	Always comes on after ignition switch is turned on.	1
	Does not come on for 3 seconds after ignition switch on.	2
	Comes on and off below 10 km/h (6 mph).	3
	Comes on while running.	1
Brake working	Brakes pull.	4
	Braking inefficient.	4
	A.B.S. operates at ordinary braking.	4
	A.B.S. operates just before stopping at ordinary braking.	4
	Brake pedal pulsates abnormally while A.B.S. is operating.	4
	Skidding noise occurs while A.B.S. working. (A.B.S. works inefficiently)	5

1	"ANTILOCK" warning light comes on.

Disconnect actuator check connector. (See page BR-52)

↓

Does warning light always come on or show the normal code? (Ignition switch on)

→ NO → See diagnostic code. (See page BR-53)

↓ YES

Is the front axle hub serrated?

→ NO → Faulty front axle hub.

↓ YES

Continued on page BR-56

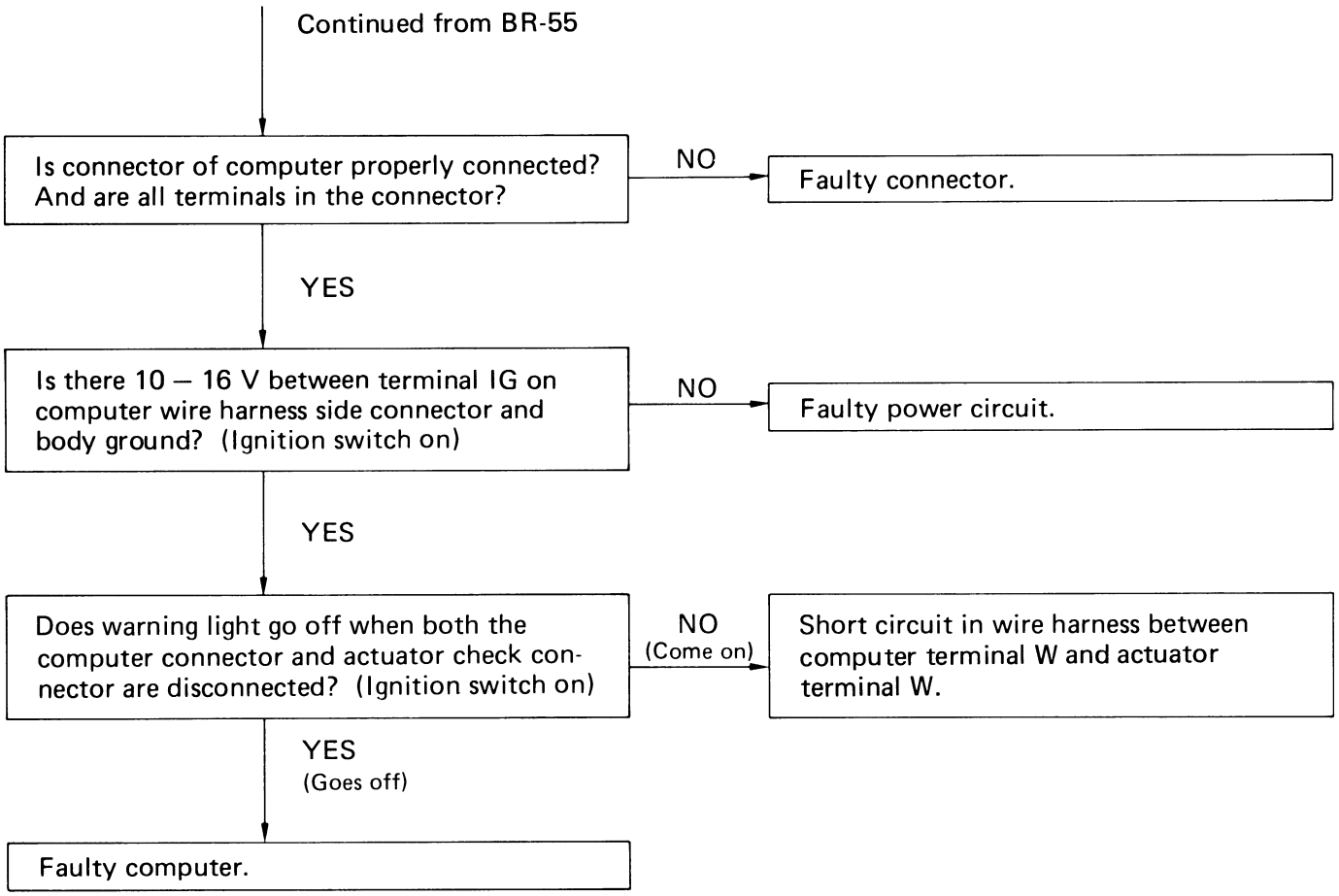
Continued from BR-55
Is connector of computer properly connected? And are all terminals in the connector?
NO
Faulty connector.
YES
Is there 10 – 16 V between terminal IG on computer wire harness side connector and body ground? (Ignition switch on)
NO
Faulty power circuit.
YES
Does warning light go off when both the computer connector and actuator check connector are disconnected? (Ignition switch on)
NO
(Come on)
Short circuit in wire harness between computer terminal W and actuator terminal W.
YES
(Goes off)
Faulty computer.

2	"ANTILOCK" warning light does not come on for 3 seconds after ignition switch on.

Disconnect connector from actuator, and ground the terminal W of the wire harness side connector.
(Ignition switch on)

↓

Does warning light come on?

NO → Bulb burned out or open circuit in wire harness between warning light and actuator terminal W.

YES ↓

Disconnect connectors from computer and actuator, and ground terminal W of computer wire harnes side connector.
(Ignition switch on)

↓

Does warning light come on?

NO → Open circuit in wire harness between computer terminal W and warning light.

YES ↓

With ignition switch off, disconnect actuator connector, and check continuity between terminal W and AST on actuator side.

↓

Reverse tester leads and check again.
Is there one way continuity between terminals?

NO → Short circuit in actuator inside diode.

HINT: If the diode is short-circuited, a malfunction at computer terminal W will occur.
When inspecting the terminal, connect the computer connector, and disconnect actuator connector. Then turn the ignition switch on, and check that the warning light goes on. If it does, the computer terminal is OK.

YES ↓

Faulty computer.

3	"ANTILOCK" warning light comes on and off.

- Actuator check connector is disconnected.
- Open circuit in wire harness between computer terminal T and actuator terminal T.
- Actuator terminal GND is improperly connected or open circuit in wire harness between actuator terminal GND and body ground.

4	• Brakes pull. • Braking inefficient. • A.B.S. operates at ordinary braking. • A.B.S. operates just before stopping at ordinary braking. • Brake pedal pulsates abnormally while A.B.S. working.

Disconnect actuator check connector.
(See page BR-52)

↓

Does warning light show the diagnostic normal code? (Ignition switch on)

NO → See diagnostic code. (See page BR-53)

YES ↓

Are each speed sensors installed in place? And are each installation bolts tightened securely?

NO → Speed sensor installation faulty.

YES ↓

Disconnect connector from computer, inspect continuity between each speed sensor terminals on wire harness side.
(See page BR-71)

↓

Continued on page BR-59

Continued from BR-58

Does any abnormal change occur in continuity when the connectors or wire harness of the speed sensor and intermediate connectors are twisted or bent?

YES (Abnormal change) → Faulty wire harness.

NO (No change)

Is there foreign material or ferric chips on the sensor tip?

YES → Clean chips from the speed sensor.

NO

Inspect the front axle hub serrations and sensor rotor serrations.
(See pages BR-67 and 70)

Are the front axle hub serrations and sensor rotor serrations OK?

NO → Faulty front axle hub and/or sensor rotor.

YES

Inspect the brake actuator operation.
(See page BR-61)

Is actuator operation OK?

NO → Faulty brake actuator.

YES

Replace the speed sensor.
(Inner magnet faulty)

5	Anti-lock brake system works inefficiently.

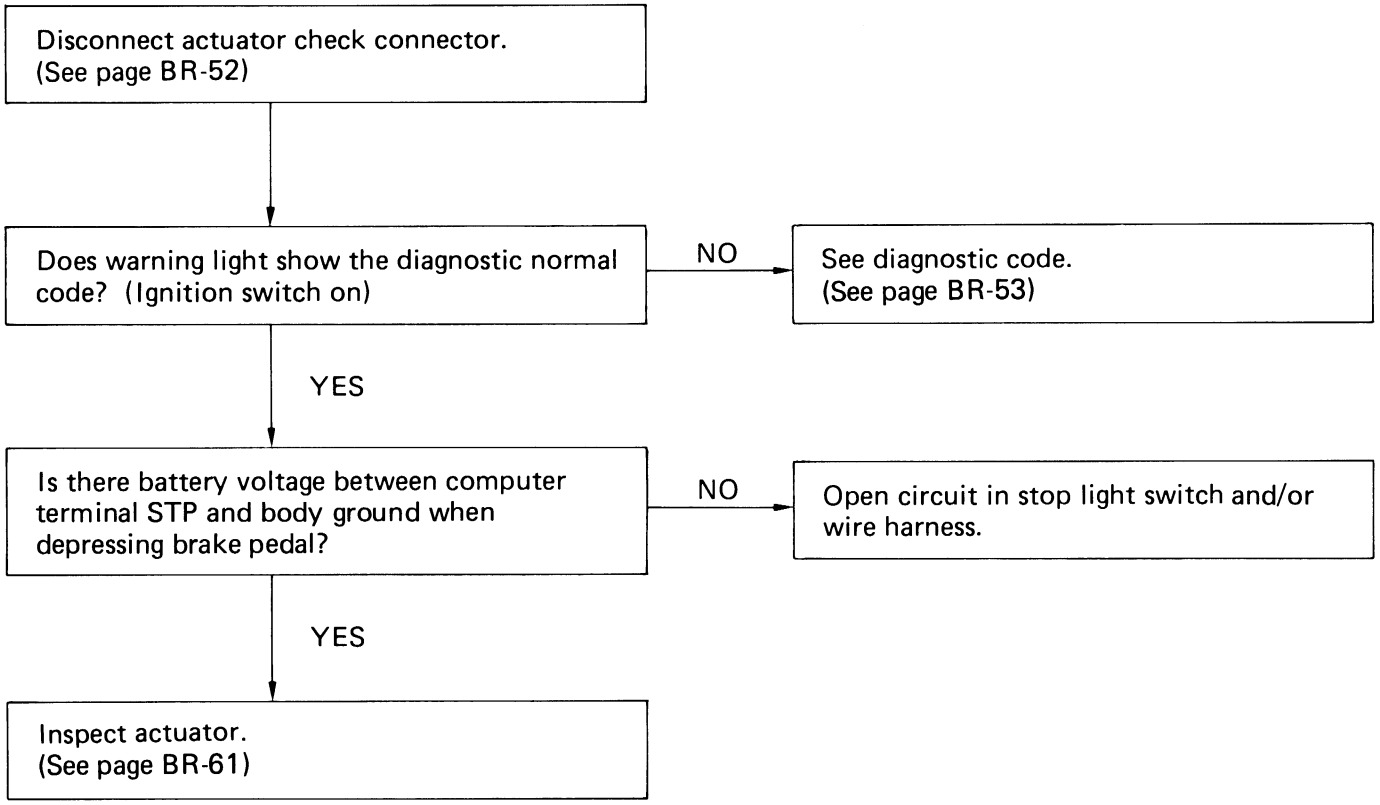

A.B.S. Actuator

COMPONENTS

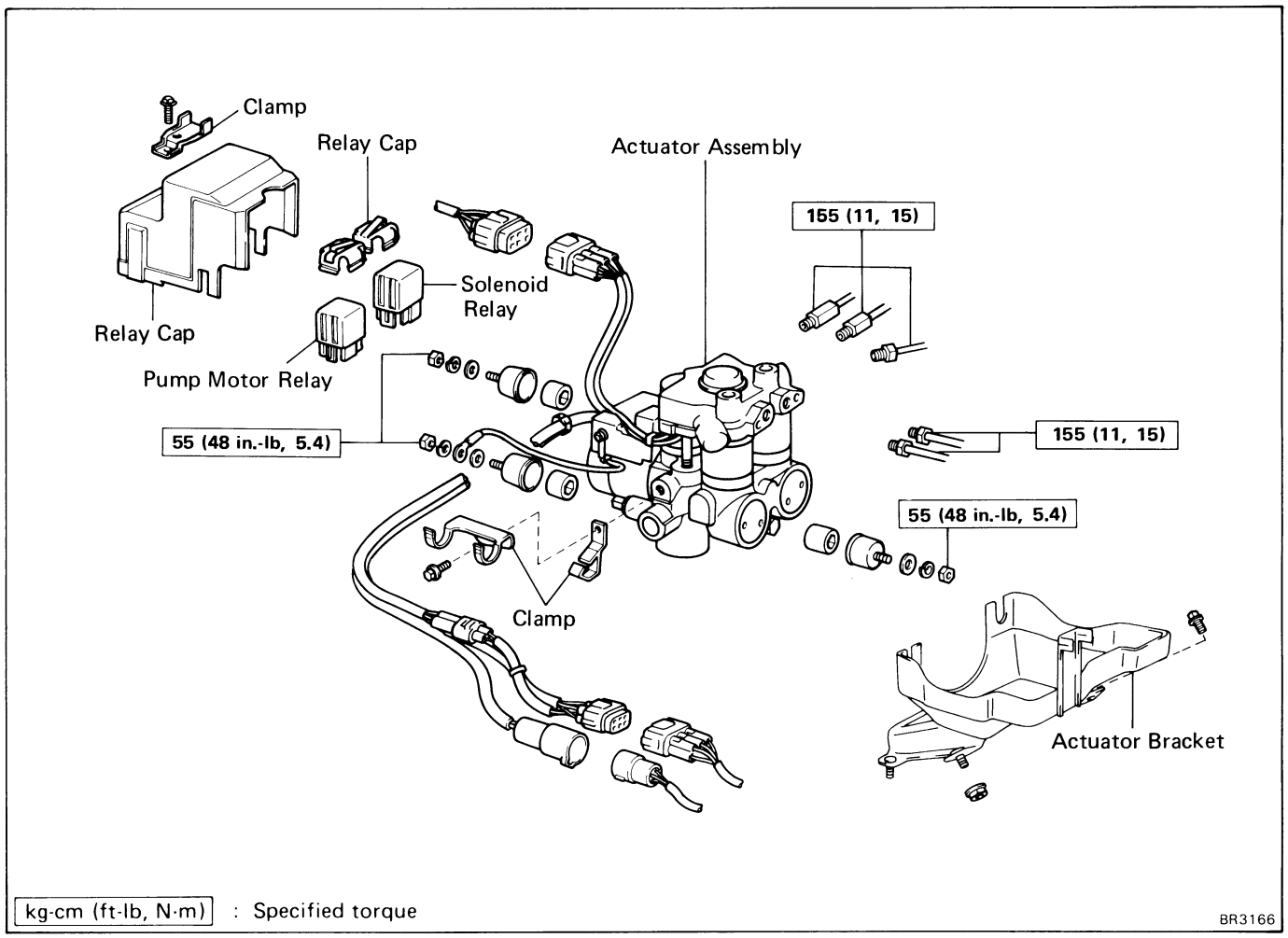

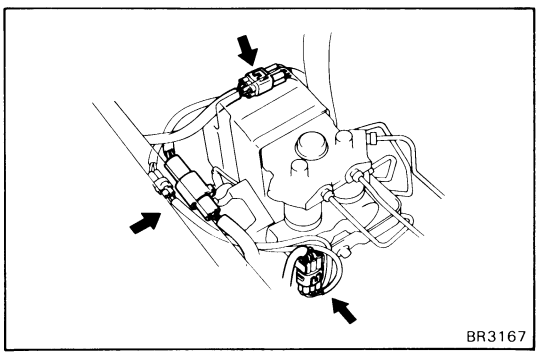

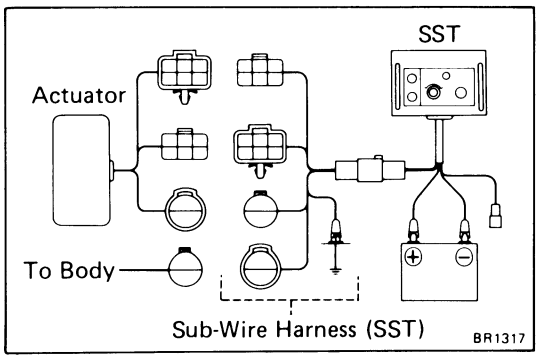

INSPECTION OF ACTUATOR OPERATION

1. **INSPECT BATTERY VOLTAGE**

   Battery voltage: 10 – 14.5 V

2. **DISCONNECT CONNECTORS FROM ACTUATOR**

   Disconnect the three connectors from the actuator.

3. **CONNECT ACTUATOR CHECKER (SST) TO ACTUATOR**

   (a) Connect the actuator checker (SST) to the actuator and body side wire harness through the sub-wire harness (SST) as shown.

   SST 09990-00150

   (b) Connect the red cable of the checker to the battery positive (+) terminal and black to the negative (–) terminal. Connect the black cable of the sub-wire harness to the battery negative (–) terminal or body ground.

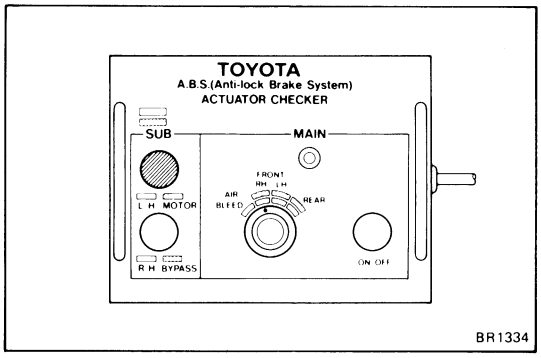

BR1334

4. INSPECT ACTUATOR OPERATION

(a) Start the engine, and run it at idle.

(b) Turn the MAIN select switch of the actuator checker to "FRONT RH" position.

(c) Push and hold in the SUB MOTOR switch for a few seconds.

(d) Depress the brake pedal and hold it until the step (g) is completed.

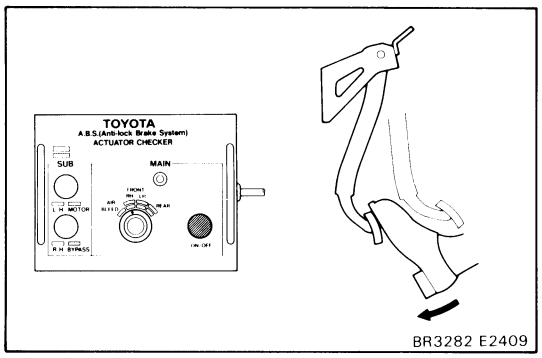

BR3282 E2409

(e) Push the MAIN push switch. Check that the brake pedal does not go down.

NOTICE: Do not keep the MAIN switch pushing more than 10 seconds.

(f) Release the switch, and check that the pedal go down.

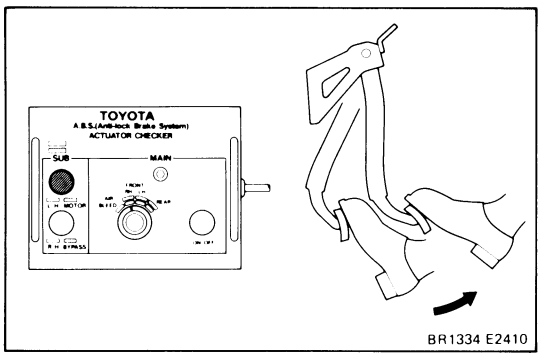

BR1334 E2410

(g) Push and hold in the SUB MOTOR switch for a few seconds, and check that the pedal returns.

(h) Release the brake pedal.

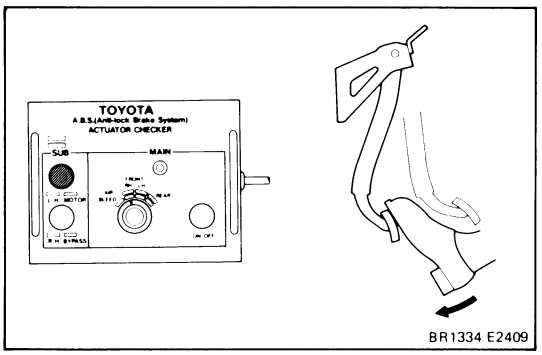

BR1334 E2409

(i) Push and hold in the SUB MOTOR switch for a few seconds.

(j) Depress the brake pedal and hold it for about 15 seconds. As you hold the pedal down, push the SUB MOTOR switch for a few seconds. Check that the brake pedal does not pulsate.

5. INSPECT FOR OTHER WHEELS

(a) Turn the MAIN switch to "FRONT LH" position.

(b) Repeating (c) to (j) of the step 4, check the actuator operation similarly.

(c) Similarly, inspect "REAR" position.

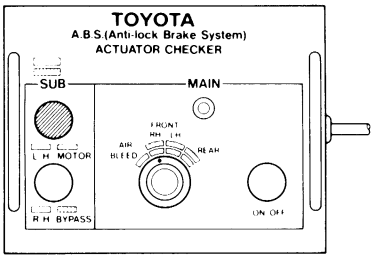

BR1334

6. **PUSH SUB MOTOR SWITCH**

Push and hold in the SUB MOTOR switch for a few seconds.

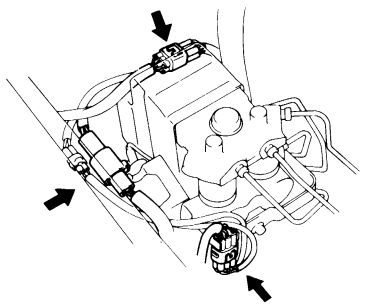
BR3167

7. **DISCONNECT ACTUATOR CHECKER (SST) FROM ACTUATOR**

(a) Disconnect the actuator checker (SST) and sub-wire harness (SST) from the actuator.

SST 09990-00150

(b) Connect the actuator connectors.

(c) Clear the diagnostic codes.
(See page BR-54)

REMOVAL OF ACTUATOR

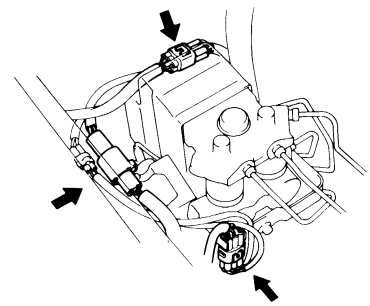
BR3167

1. **TAKE OUT FLUID WITH SYRINGE OR AN EQUIVALENT**

CAUTION: Do not let brake fluid remain on a painted surface. Wash off it immediately.

2. **DISCONNECT ACTUATOR CONNECTORS**

Disconnect the three connectors from the actuator.

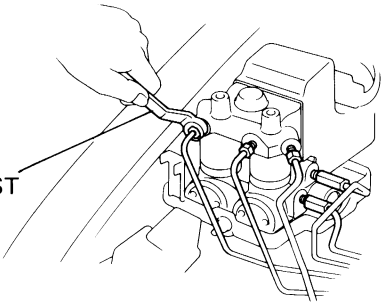

BR3168

3. **DISCONNECT BRAKE TUBES FROM ACTUATOR**

Using SST, disconnect the five brake tubes from the actuator.

SST 09751-36011

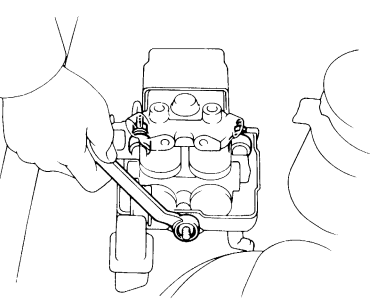
BR3169

4. **REMOVE ACTUATOR**

Remove the three nut and remove the actuator.

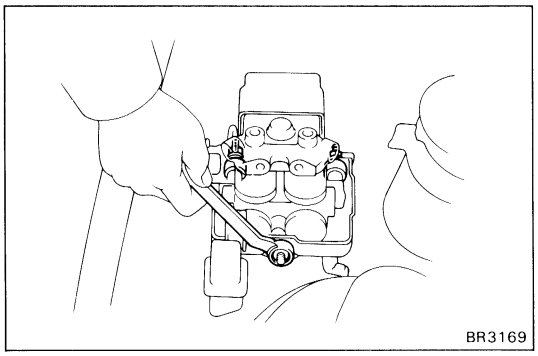

INSTALLATION OF ACTUATOR

1. INSTALL ACTUATOR

Install the actuator to the actuator bracket with three nuts and washers, and tighten them.

Torque: 55 kg-cm (48 in.-lb, 5.4 N·m)

HINT: Install the motor ground wire between the plate washer and spring washer before installing the rear right side nut.

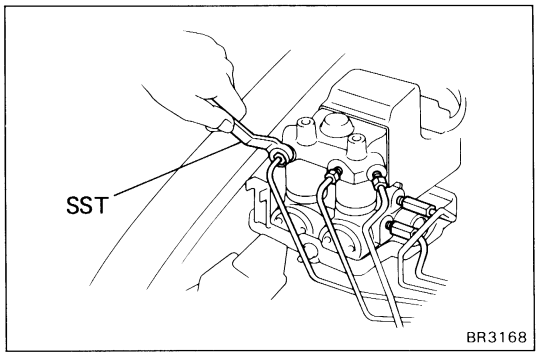

2. CONNECT BRAKE TUBES TO ACTUATOR

Connect the five brake tubes to the actuator by hand, and using SST, tighten them.

SST 09751-36011

Torque: 155 kg-cm (11 ft-lb, 15 N·m)

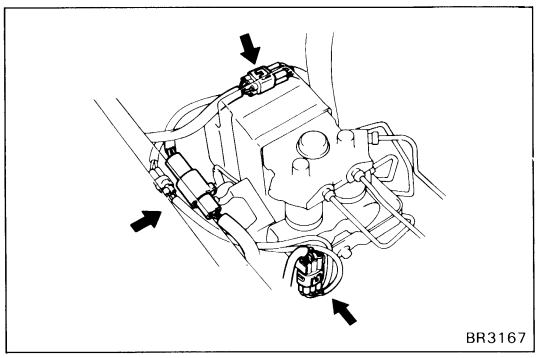

3. CONNECT ACTUATOR CONNECTORS

Connect the three connectors of the actuator.

4. FILL BRAKE RESERVOIR WITH BRAKE FLUID AND BLEED BRAKE SYSTEM

5. CHECK FOR FLUID LEAKAGE

6. CHECK ACTUATOR OPERATION
(See page BR-61)

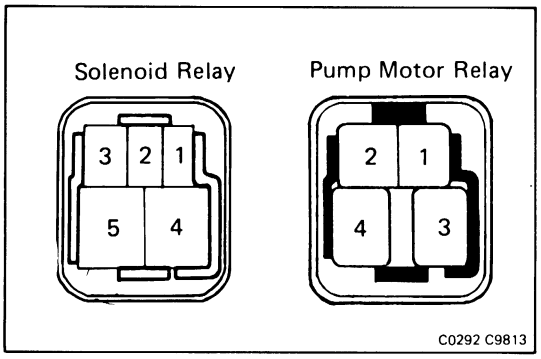

Control Relays

INSPECTION OF CONTROL RELAYS

1. **REMOVE CONTROL RELAYS**

   Remove the two control relays from the actuator.

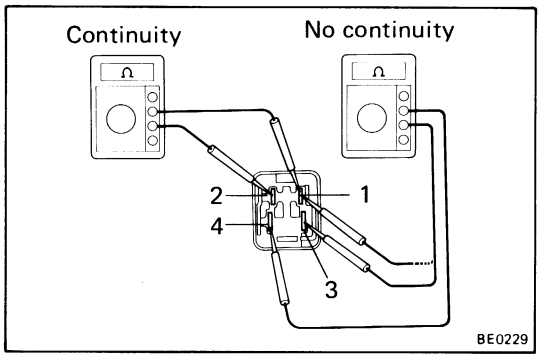

2. **INSPECT PUMP MOTOR RELAY CONTINUITY**

   (a) Check that there is continuity between terminals 1 and 2.

   (b) Check that there is no continuity between terminals 3 and 4.

   (c) Check that there is no continuity between terminals 1 and 4.

   If continuity is not as specified, replace the relay.

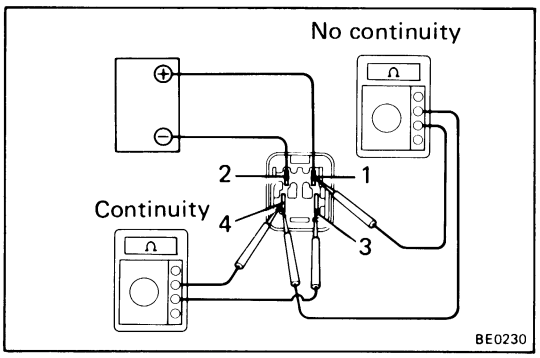

3. **INSPECT PUMP MOTOR RELAY OPERATION**

   (a) Apply battery voltage to terminals 1 and 2.

   (b) Check that there is continuity between terminals 3 and 4.

   (c) Check that there is no continuity between terminals 1 and 4.

   If operation is not as specified, replace the relay.

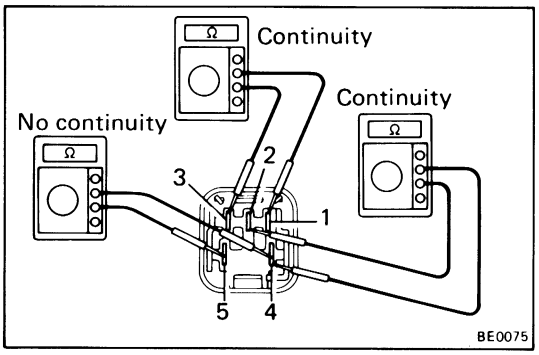

4. **INSPECT SOLENOID RELAY CONTINUITY**

   (a) Check that there is continuity between terminals 1 and 3.

   (b) Check that there is continuity between terminals 2 and 4.

   (c) Check that there is no continuity between terminals 4 and 5.

   If continuity is not as specified, replace the relay.

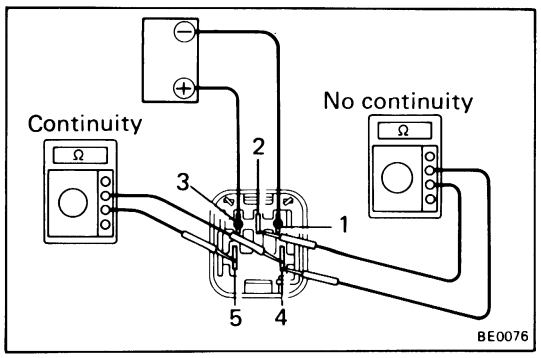

5. **INSPECT SOLENOID RELAY OPERATION**

   (a) Apply battery voltage to terminals 1 and 3.

   (b) Check that there is continuity between terminals 4 and 5.

   (c) Check that there is no continuity between terminals 2 and 4.

   If operation is not as specified, replace the relay.

6. **INSTALL TWO CONTROL RELAYS**

Front Speed Sensor

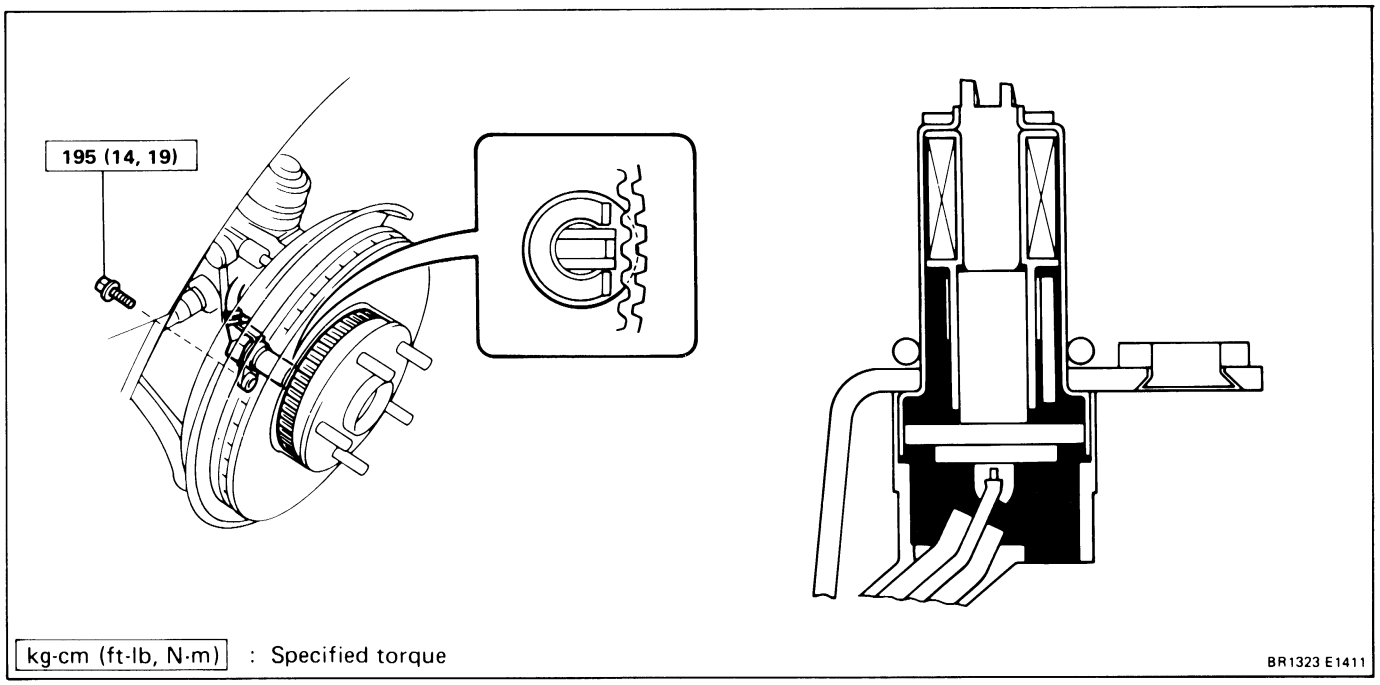

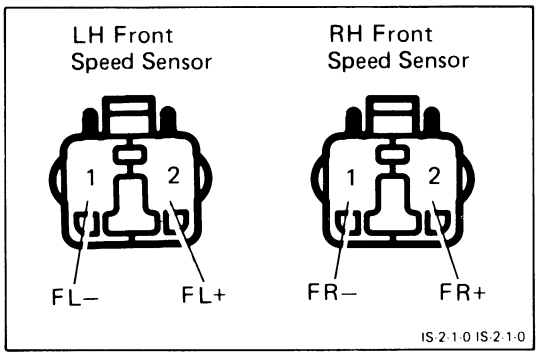

INSPECTION OF FRONT SPEED SENSOR

1. INSPECT SPEED SENSOR

(a) Disconnect the speed sensor connector in the engine compartment.

(b) Measure the resistance between terminals.

Resistance: 0.8 – 1.3 kΩ

If resistance value is not as specified, replace the sensor.

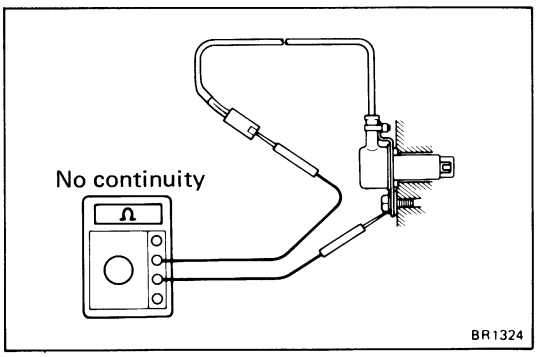

(c) Check that there is no continuity between each terminal and sensor body.

If there is continuity, replace the sensor.

(d) Connect the speed sensor connector.

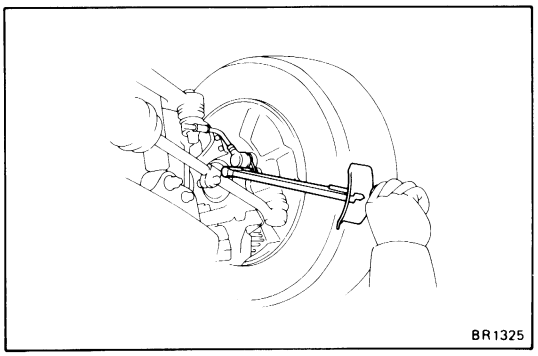

2. INSPECT SENSOR INSTALLATION

Check that the sensor installation bolt is tightened properly. If not, tighten the bolt.

Torque: 195 kg-cm (14 ft-lb, 19 N·m)

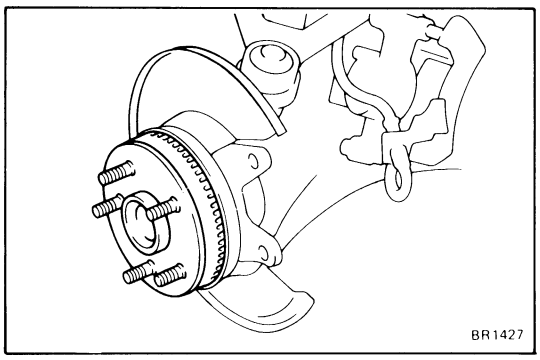

3. VISUALLY INSPECT SENSOR ROTOR SERRATIONS

(a) Remove the two bolts and remove the torque plate with brake cylinder.

(b) Remove the rotor disc.

(c) Inspect the sensor rotor serrations for scratches, cracks, warping or missing teeth.

(d) Install the rotor disc and brake cylinder assembly with two bolts.

Torque: 1,065 kg-cm (77 ft-lb, 104 N·m)

NOTICE: To prevent damage to the serrations, do not strike the axle hub.

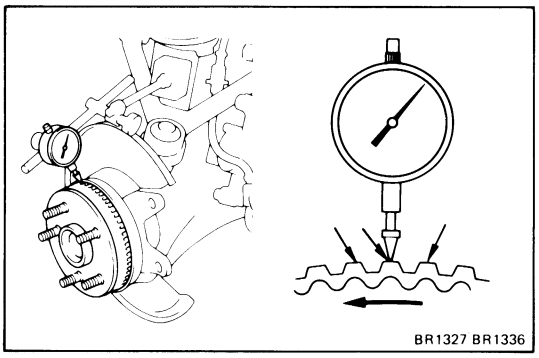

4. INSPECT SENSOR ROTOR RUNOUT

Measure the sensor rotor runout at 2 mm (0.08 in.) from the serration edge.

Maximum sensor rotor runout
(the runout fluctuation measured at the top of 3 consecutive serrations): 0.1 mm (0.004 in.)

If not as specified, replace the front axle hub.

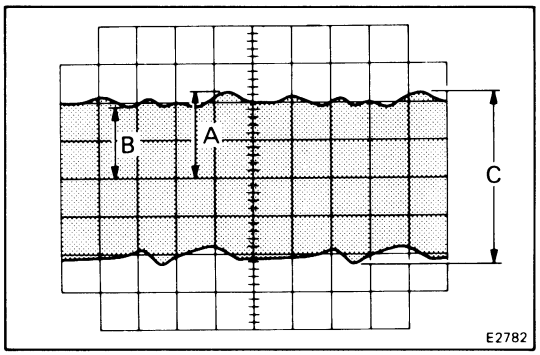

INSPECTION OF FRONT SPEED SENSOR AND SENSOR ROTOR SERRATIONS (REFERENCE)

INSPECT FRONT SPEED SENSOR AND SENSOR ROTOR SERRATIONS BY USING AN OSCILLOSCOPE

(a) Connect an oscilloscope to the speed sensor connector.

(b) Run the vehicle at 20 km/h (12.4 mph), and inspect speed sensor output wave.

(c) Check that C is 0.5 V or more.

If not as specified, replace the speed sensor.

(d) Check that B is 70% or more of A.

If not as specified, replace the front axle hub.

Rear Speed Sensor

A340E and R154

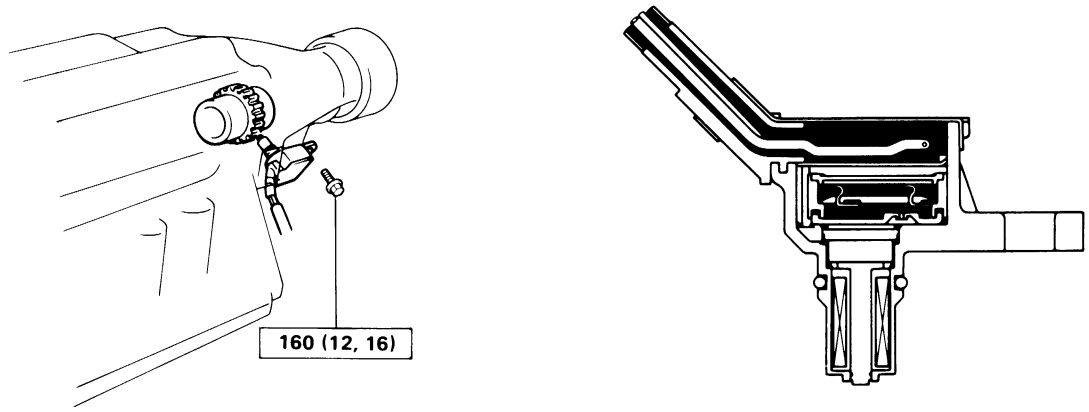

W58

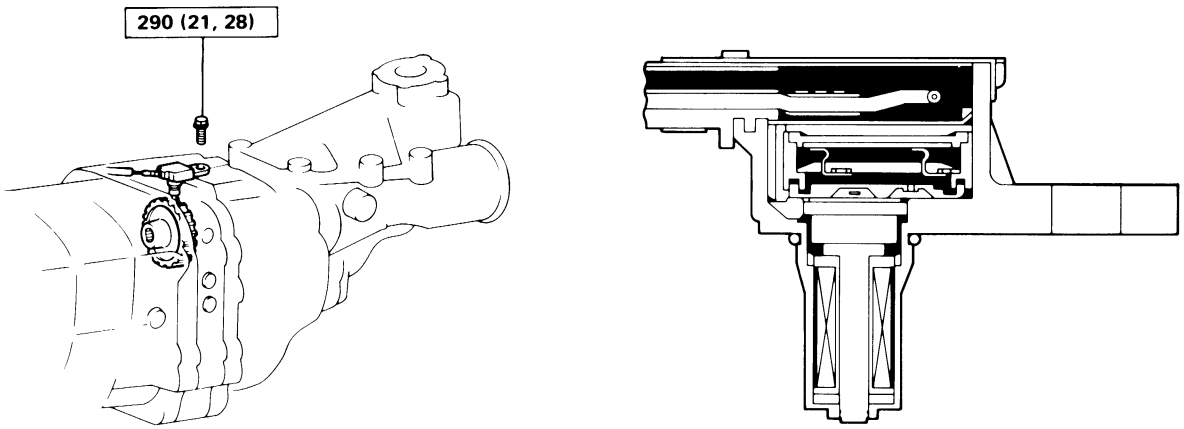

kg-cm (ft-lb, N-m) : Specified torque

BR1328 ZD0053
BR1337 BR1338

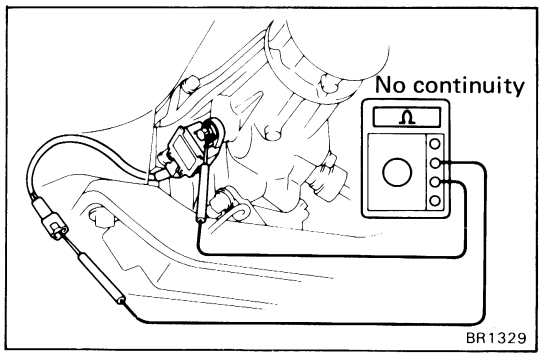

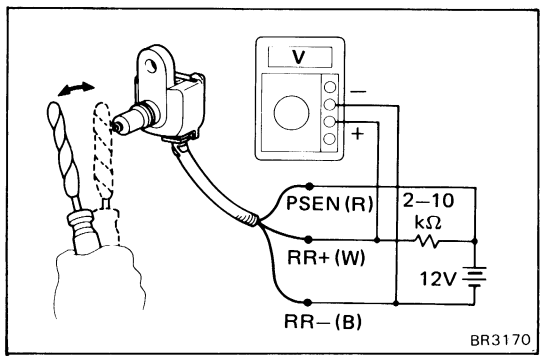

INSPECTION OF REAR SPEED SENSOR

1. INSPECT SPEED SENSOR

(a) Disconnect the speed sensor connector.

(b) Check that there is no continuity between each terminal and sensor body.

If there is continuity, replace the speed sensor.

(c) Remove the speed sensor from the transmission.

(d) Remove the terminals from the connector.

(e) Using a resistor (2 — 10 kΩ), complete the circuit as shown in the illustration.

HINT: Do not short any terminal.

(f) Check that the voltmeter alternately indicates 12 V and 2 V or less as the screwdriver is repeatedly brought towards the sensor and then withdrawn.

If indications are not as specified, replace the speed sensor.

HINT: Cover the screwdriver tip with a cloth before use to prevent scratching the tip of the speed sensor.

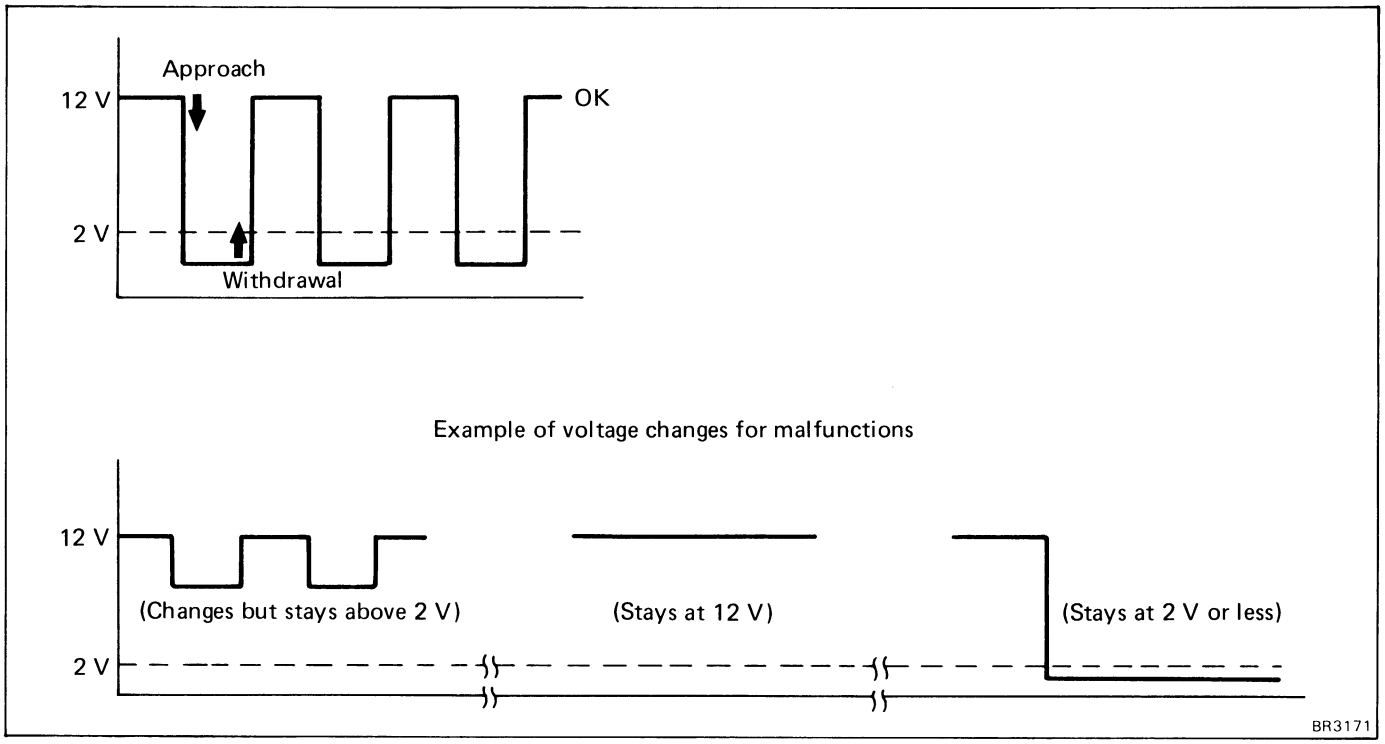

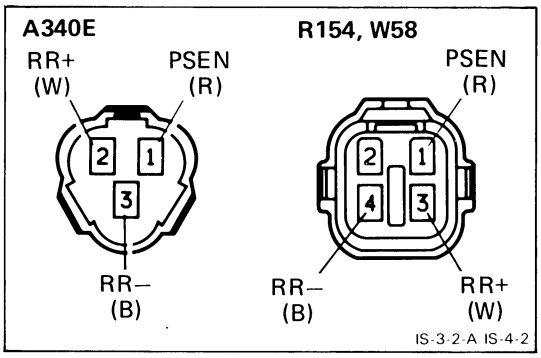

(g) Install the terminals to the connector.

NOTICE: Do not misinstall the terminals.

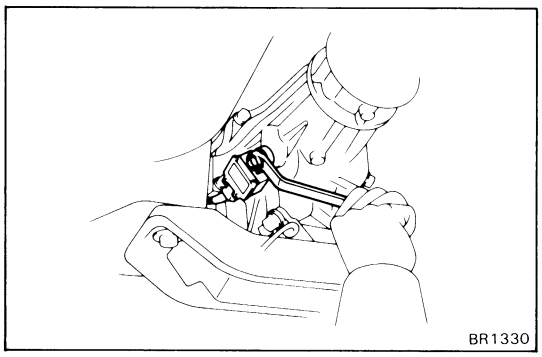

(h) Install the speed sensor properly with a bolt, and tighten the bolt.

Torque:

A340E, R154	**160 kg-cm (12 ft-lb, 16 N·m)**
W58	**290 kg-cm (21 ft-lb, 28 N·m)**

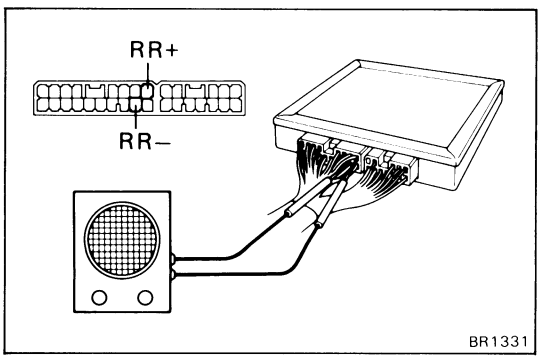

On-Vehicle Inspection (Reference)

(a) Remove the glove box and pull out the A.B.S. computer with connector connected.

(b) From back side of the connector, connect the oscilloscope to the terminal RR+ (input) and RR– (ground).

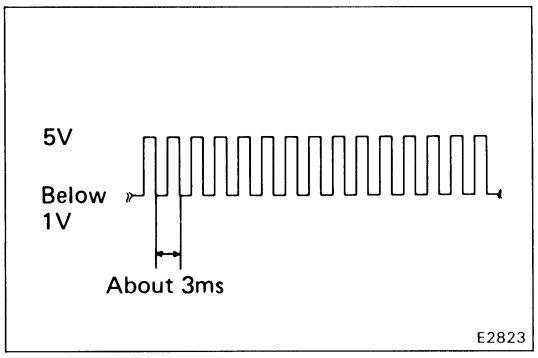

(c) Run the vehicle at 20 km/h (12.4 mph), check that the speed sensor output wave matches the wave pattern shown in the illustration.

(d) Disconnect the oscilloscope and install the computer in place.

(e) Install the glove box.

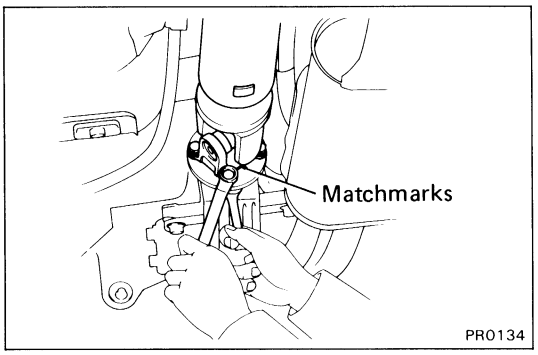

2. INSPECT SENSOR ROTOR SERRATIONS

(a) Drain the transmission fluid.

(b) Remove the propeller shaft.
(See page PR-3)

(c) Remove the extension housing.

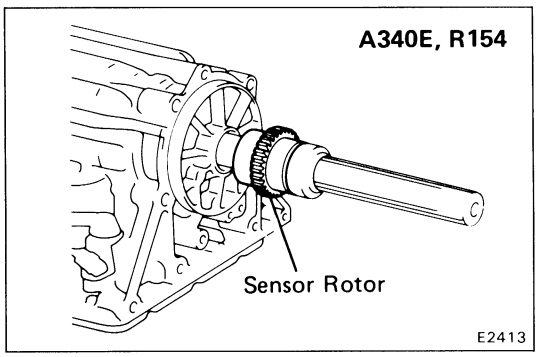

(d) (A340E, R154)
Inspect the sensor rotor serration for scratches, cracks, missing teeth or abnormal play.

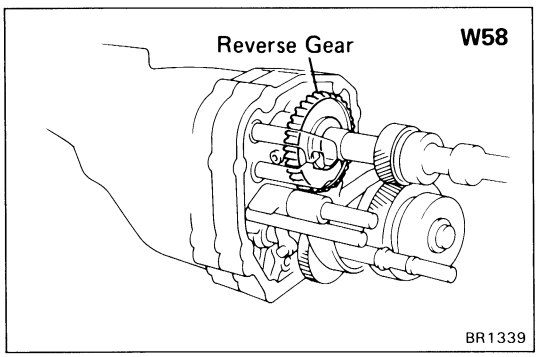

(e) (W58)
Inspect the reverse gear serration for scratches, cracks, missing teeth or abnormal play.

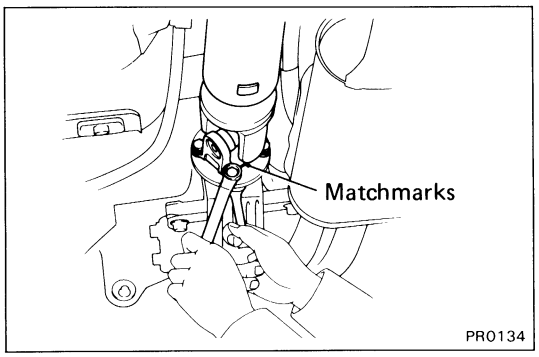

(f) Install the extension housing.

(g) Install the propeller shaft.
(See page PR-9)

(h) Fill the transmission fluid and check fluid level.

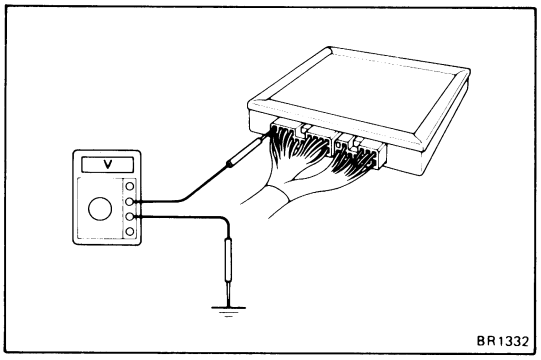

Anti-lock Brake System Circuit

INSPECTION OF SYSTEM CIRCUIT

1. INSPECT SYSTEM CIRCUIT WITH CONNECTOR CONNECTED

(a) Remove the glove box and pull out the A.B.S. computer.

(b) Using a voltmeter with high impedance (10 kΩ/V minimum), measure the voltage at each terminal and body ground.

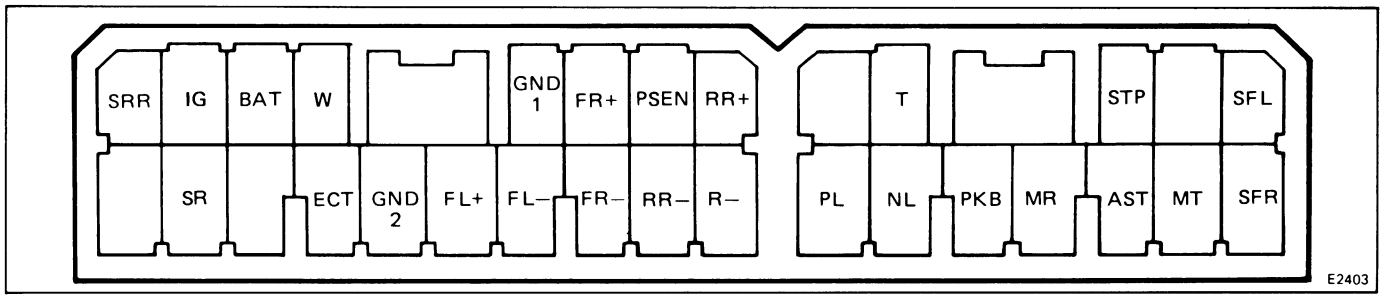

Tester Connection	Condition	Voltage
SFL – Body ground	Ignition switch on	Battery voltage
	Ignition switch on and "ANTILOCK" warning light goes on	About 0 V
SFR – Body ground	Ignition switch on	Battery voltage
	Ignition switch on and "ANTILOCK" warning light goes on	About 0 V
AST – Body ground	Ignition switch on	Battery voltage
	Ignition switch on and "ANTILOCK" warning light goes on	About 0 V
PESN – Body ground	Ignition switch on	Battery voltage
W – Body ground	Ignition switch on	Battery voltage
	Ignition switch on and "ANTILOCK" warning light goes on	About 0 V
SRR – Body ground	Ignition switch on	Battery voltage
	Ignition switch on and "ANTILOCK" warning light goes on	About 0 V

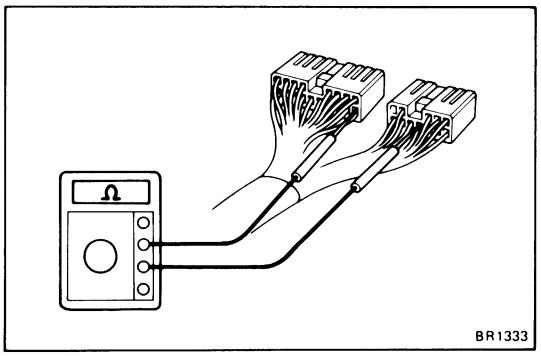

2. INSPECT SYSTEM CIRCUIT WITH CONNECTOR DISCONNECTED

(a) Disconnect the connectors from the computer, inspect at the wire harness side connector.

Tester Connection	Check Item	Condition	Voltage or Resistance Value
SFL – AST	Resistance	Ignition switch off	About 1 Ω
STP – Body ground	Voltage	Ignition switch off and brake pedal depressed	Battery voltage
	Continuity	Ignition switch off and brake pedal returned	Continuity
T – Body ground	Continuity	Ignition switch off	Continuity
SFR – AST	Resistance	Ignition switch off	About 1 Ω
MT – Body ground	Continuity	Ignition switch off	Continuity
AST – Body ground	Continuity	Ignition switch off	Continuity
MR – R ⊖	Resistance	Ignition switch off	50 – 80 Ω
PKB – Body ground	Voltage	Ignition switch on and PKB lever pulled	About 0 V
		Engine running and PKB lever returned	Battery voltage
NL – Body ground	Voltage	Ignition switch on and shift into "N" range	Battery voltage
PL – Body ground	Voltage	Ignition switch on and shift into "P" range	Battery voltage
FR ⊕ – FR ⊖	Resistance	Ignition switch off	0.8 – 1.3 kΩ
GND1 – Body ground	Continuity	Ignition switch off	Continuity
BAT – Body ground	Voltage	–	Battery voltage
IG – Body ground	Voltage	Ignition switch on	Battery voltage
SRR – AST	Resistance	Ignition switch off	About 1 Ω
R ⊖ – Body ground	Continuity	Ignition switch off	No continuity
RR ⊖ – Body ground	Continuity	Ignition switch off	No continuity
FR ⊖ – Body ground	Continuity	Ignition switch off	No continuity
FL ⊖ – Body ground	Continuity	Ignition switch off	No continuity
FL ⊕ – FL ⊖	Resistance	Ignition switch off	0.8 – 1.3 kΩ
GND2 – Body ground	Continuity	Ignition switch off	Continuity
ECT – Body ground	Voltage	Ignition switch on and shift into "N" or "P" range	About 5 V
SR – R ⊖	Resistance	Ignition switch off	65 – 100 Ω

(b) Connect the connectors, and install the computer in place.

(c) Install the glove box.

STEERING

	Page
PRECAUTIONS	SR-2
TROUBLESHOOTING	SR-2
ON-VEHICLE INSPECTION	SR-3
STEERING COLUMN	SR-4
USA	SR-7
CANADA	SR-22
POWER STEERING	SR-36
Description	SR-36
On-Vehicle Inspection	SR-40
Power Steering Pump	SR-45
Gear Housing	SR-57
• w/o PPS (Progressive Power Steering)	SR-61
• w/ PPS (Progressive Power Steering)	SR-76
Progressive Power Steering	SR-90

PRECAUTIONS

- **Care must be taken to replace parts properly because they could affect the performance of the steering system and result in a driving hazard.**
- **(USA)**
  The steering wheel pad has an airbag built in, so take all due precautions when handling it. For more details, see the SRS AIRBAG section.

TROUBLESHOOTING

Problem	Possible cause	Remedy	Page
Hard steering	Tires improperly inflated	Inflate tires to proper pressure	FA-3
	Excessive caster	Check front wheel alignment	FA-3
	Steering system joint worn	Replace steering system joints	SR-57
	Ball joints worn	Inspect upper and lower ball joints	FA-21
	Steering column binding	Inspect steering column	SR-4
	Steering gear out of adjustment or broken	Adjust or repair steering gear	SR-57
	Power steering belt loose	Adjust belt tension	SR-40
	Fluid level in reservoir low	Check reservoir oil level	SR-40
	Power steering unit faulty	Check power steering unit	SR-40
	Solenoid valve faulty	Inspect solenoid valve	SR-94
	Electronic control faulty	Inspect electronic control	SR-90
Poor return	Tires improperly inflated	Inflate tires to proper pressure	FA-3
	Wheel alignment incorrect	Check front wheel alignment	FA-3
	Steering column binding	Inspect steering column	SR-4
	Steering gear out of adjustment or broken	Adjust or repair steering gear	SR-57
Excessive play	Front hub bearing worn	Replace front hub bearing	FA-8
	Main shaft yoke or intermediate shaft yoke worn	Replace main shaft or intermediate shaft	
	Ball joints worn	Inspect upper and lower ball joints	FA-21
	Steering system joints worn	Replace steering system joints	SR-57
	Steering gear out of adjustment or broken	Adjust or repair steering gear	SR-57
Abnormal noise	Steering linkage loose	Tighten steering linkage	
	Steering system joints worn	Replace steering system joints	SR-57
	Steering gear out of adjustment or broken	Adjust or repair steering gear	SR-57

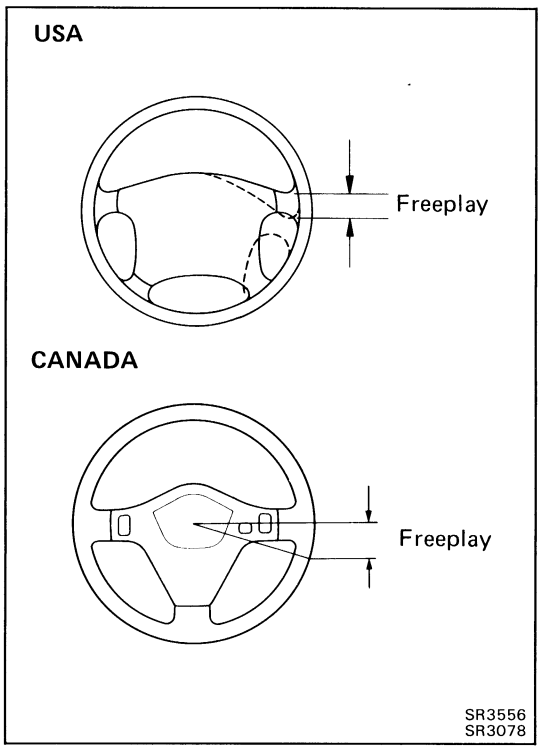

ON-VEHICLE INSPECTION

1. CHECK THAT STEERING WHEEL FREEPLAY IS CORRECT

With the vehicle stopped and tires pointed straight ahead, rock the steering wheel gently back and forth with light finger pressure. Freeplay should not exceed the maximum limit.

Maximum play: 30 mm (1.18 in.)

If incorrect, repair.

2. CHECK STEERING LINKAGE AND GEAR HOUSING

(a) Check the steering linkage for looseness or damage.

Check that:
- Tie rod ends do not have excessive play.
- Boots are not damaged.
- Boots clamps are not loose.

(b) Check gear housing for grease leakage or oozing.

STEERING COLUMN

REMOVAL AND INSTALLATION OF STEERING COLUMN

Remove and install the parts as shown.

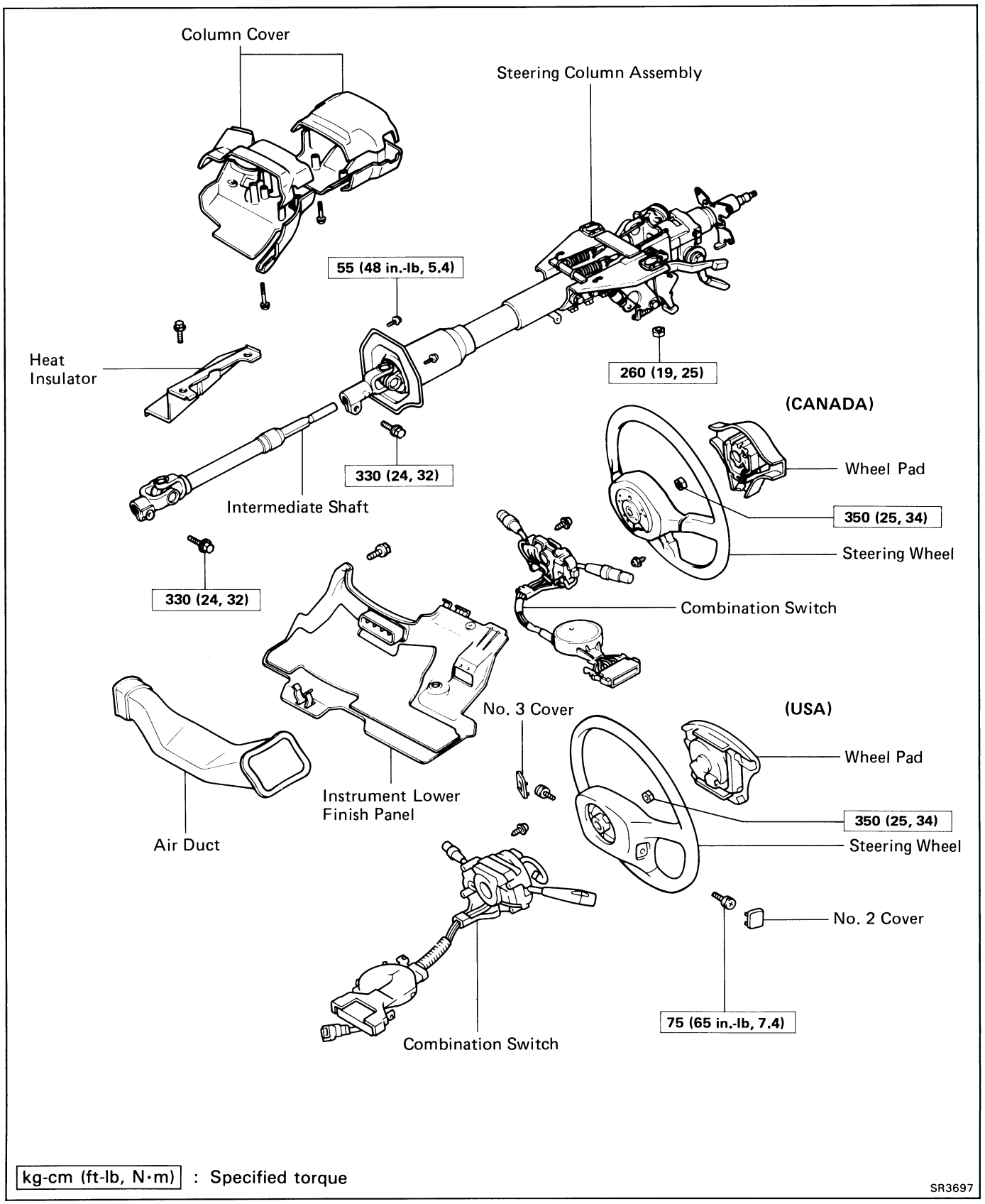

kg-cm (ft-lb, N·m) : Specified torque

SR3697

(MAIN POINTS OF REMOVAL AND INSTALLATION)

(USA)

CAUTION: Work must be started after approx. 20 seconds or longer from the time the ignition switch is turned to the LOCK position and the negative (—) terminal cable is disconnected from the battery (See page AB-2).

NOTICE: If the wiring connector of the airbag system is disconnected with the ignition switch at ON or ACC, diagnostic codes will be recorded.

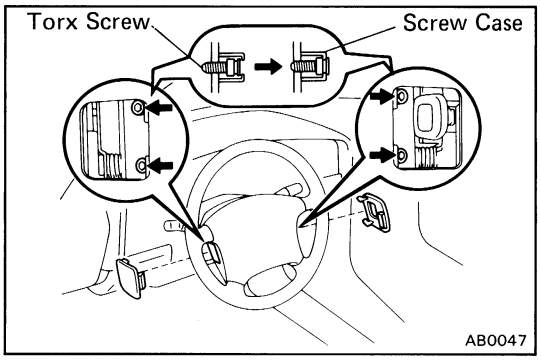

1. REMOVE STEERING WHEEL PAD

(a) Disconnect the battery negative (—) terminal.

(b) Place the front wheels facing straight ahead.

(c) Using a torx wrench, loosen the four screws.

Torx wrench: T30 (Part No.09042-00010 or locally manufactured tool)

(d) Loosen the torx screws until the groove along the screw circumference catches on the screw case.

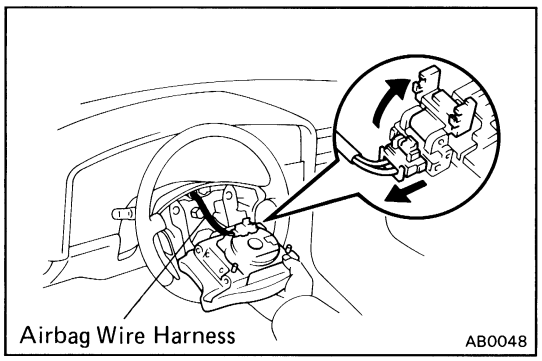

(e) Pull the wheel pad out from the steering wheel and disconnect the airbag connector.

NOTICE: When removing the wheel pad, take care not to pull the airbag wire harness.

CAUTION: When storing the wheel pad, keep the upper surface of the pad facing upward.

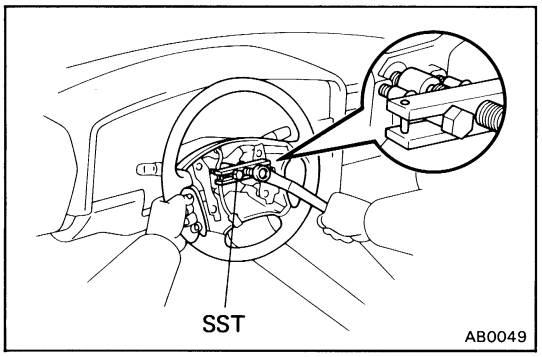

2. REMOVE STEERING WHEEL

(a) Disconnect the connector.

(b) Remove the set nut.

(c) Using SST, remove the steering wheel.

SST 09213-31021

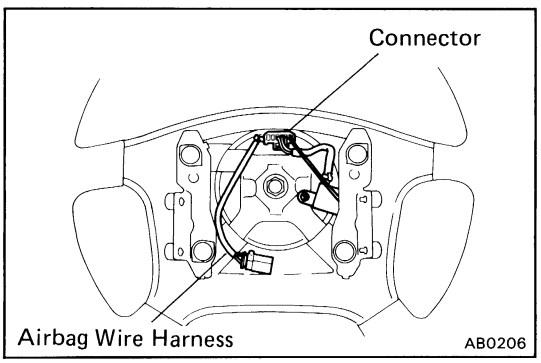

3. INSTALL STEERING WHEEL AND WHEEL PAD

(a) Check that the front wheels are facing straight ahead.

(b) Center the spiral cable.
(See page AB-16)

(c) Install the steering wheel and torque the set nut.

Torque: 350 kg-cm (25 ft-lb, 34 N·m)

(d) Connect the connector.

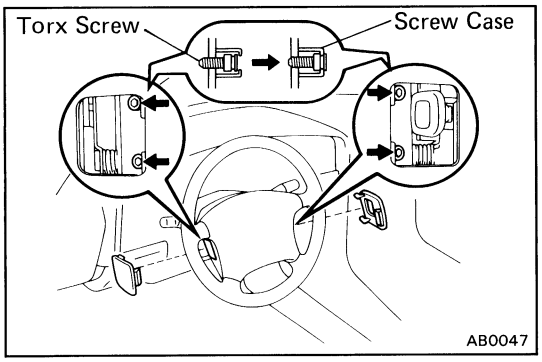

(e) Install the wheel pad after confirming that the circumference groove of the torx screws is caught on the screw case.

(f) Using a torx wrench, tighten the four screws.

Torque: 75 kg-cm (65 in.-lb, 7.4 N·m)

NOTICE:

- **Make sure the wheel pad is installed to the specified torque.**
- **If the wheel pad has been dropped, or there are cracks, dents or other defects in the case or connector, replace the wheel pad with a new one.**
- **When installing the wheel pad, take care that the wirings do not interfere with other parts and are not pinched between other parts.**

4. CHECK STEERING WHEEL CENTER POINT AFTER INSTALLING STEERING COLUMN

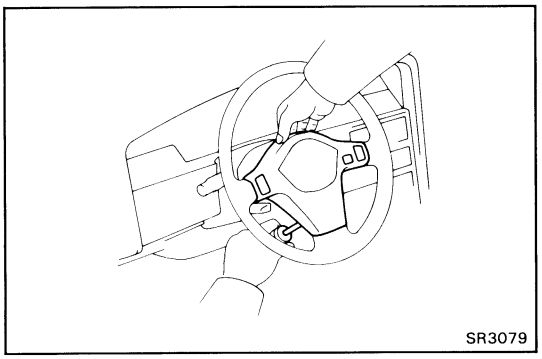

(CANADA)

1. REMOVE STEERING WHEEL

(a) Remove the screw at the lower portion of the steering wheel pad and pull the pad out upward.

(b) Remove the steering wheel set nut.

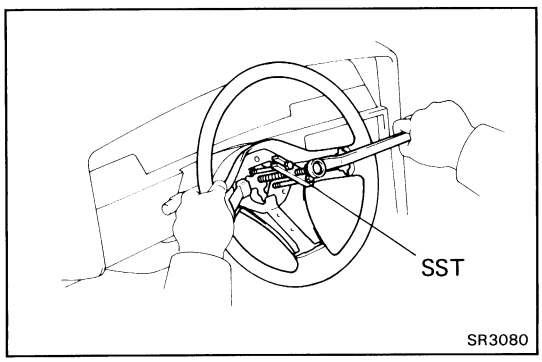

(c) Using SST, remove the steering wheel.

SST 09609-20011

2. CHECK STEERING WHEEL CENTER POINT AFTER INSTALLING STEERING COLUMN

USA

COMPONENTS

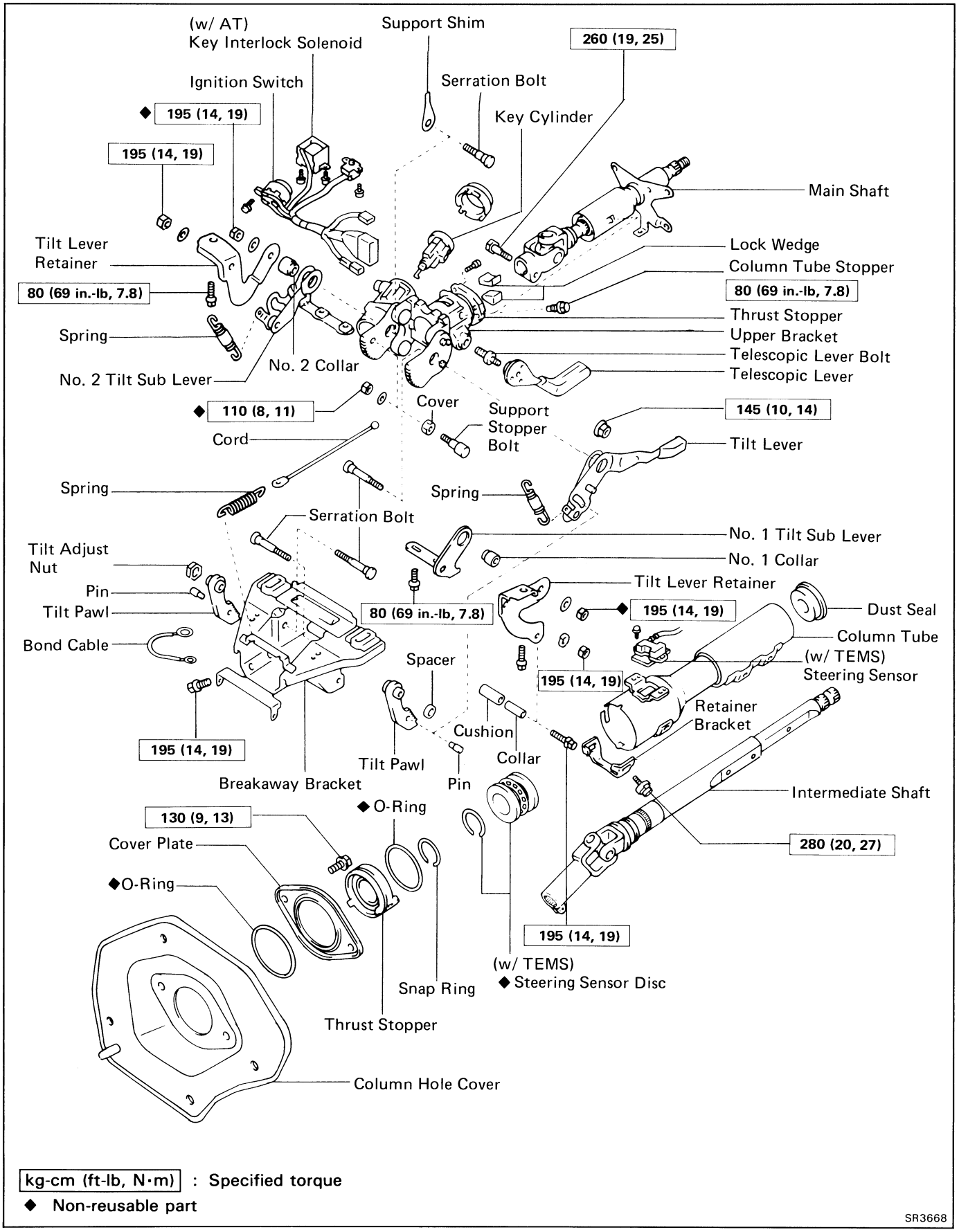

kg-cm (ft-lb, N·m) : Specified torque

◆ Non-reusable part

SR3668

DISASSEMBLY OF STEERING COLUMN

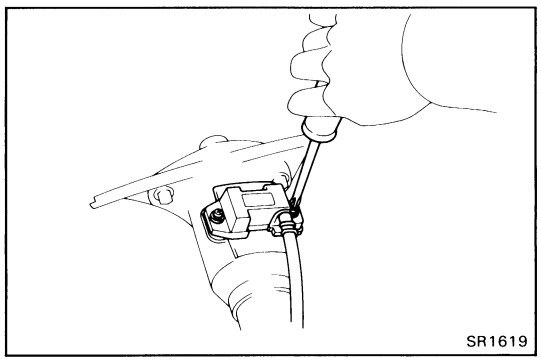

1. **(w/ TEMS)**
   REMOVE STEERING SENSOR
   Remove the two screws with the steering sensor.

2. **REMOVE IGNITION KEY LIGHT**
   Remove the screw and ignition key light.

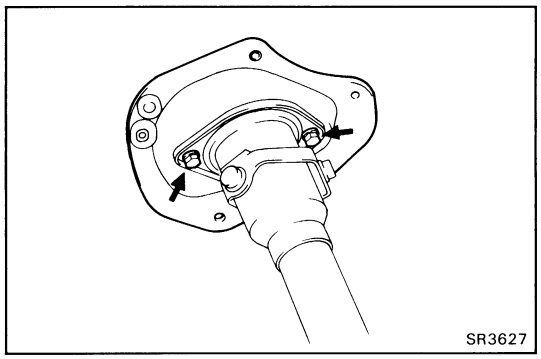

3. **REMOVE COLUMN HOLE COVER**
   (a) Remove the two bolts and column hole cover.
   (b) Remove the O-ring and cover plate.

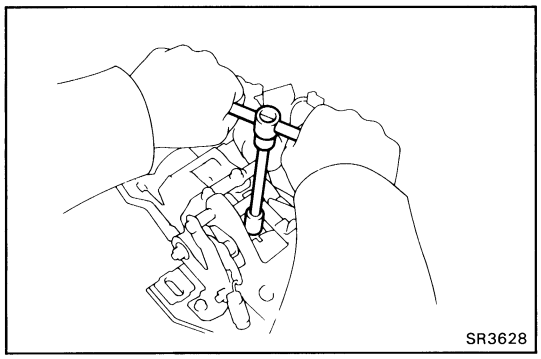

4. **REMOVE INTERMEDIATE SHAFT**
   (a) Remove the bolt from the main shaft.

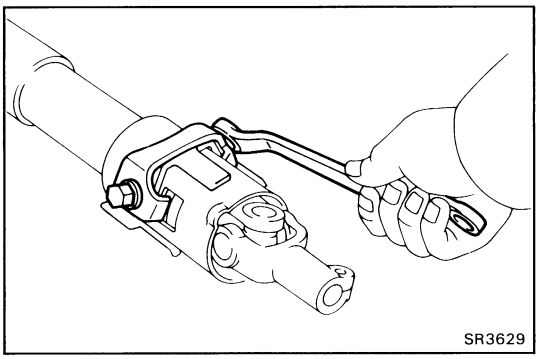

   (b) Remove the two set bolts and retainer bracket.
   (c) Pull out the intermediate shaft from the column tube.

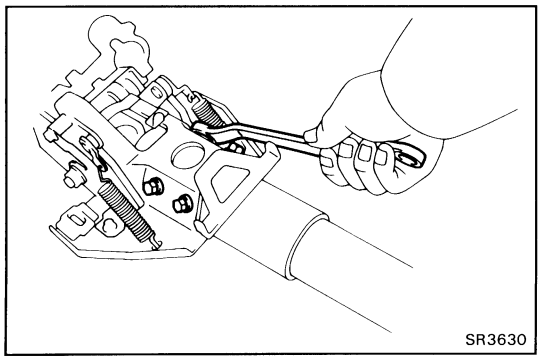

5. **REMOVE COLUMN TUBE**
   Remove the four breakaway bracket bolts, and pull out the column tube.

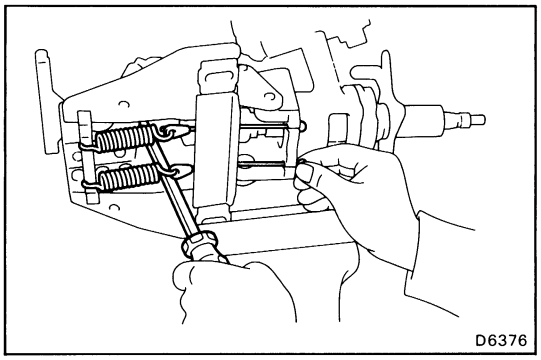

6. REMOVE TENSION SPRINGS AND CORDS

(a) Fully tilt the main shaft upward.

(b) Using a screwdriver, pry out the cord tip and remove the springs and cords.

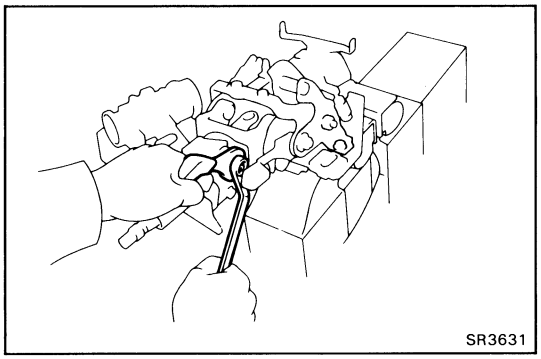

7. REMOVE TELESCOPIC LEVER

Remove the nut and telescopic lever.

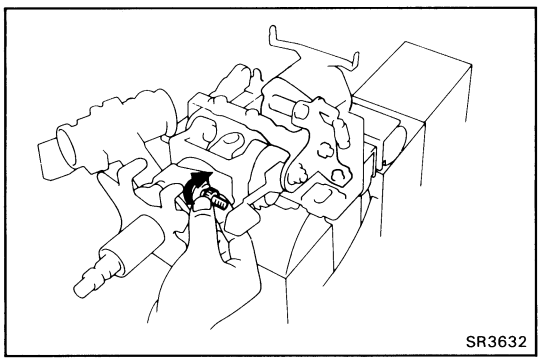

8. REMOVE TELESCOPIC LEVER LOCK BOLT

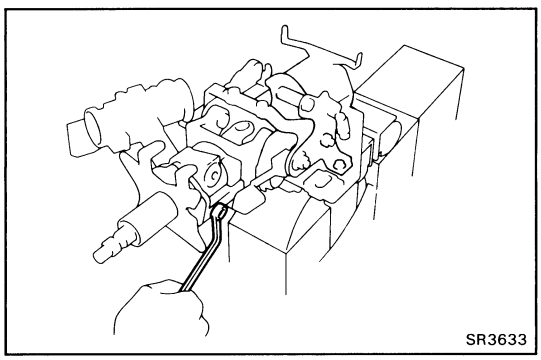

9. REMOVE MAIN SHAFT ASSEMBLY

(a) Remove the column tube stopper.

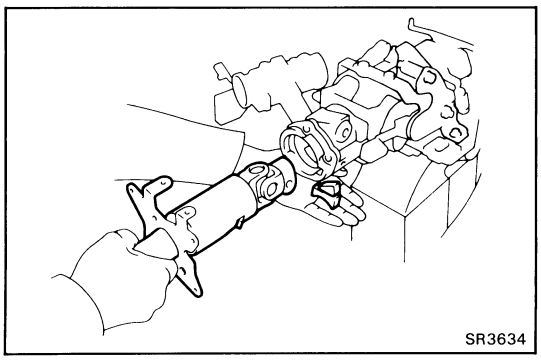

(b) Pull out the main shaft assembly and then catch the two lock wedges by hand.

HINT: Be careful the spline part of the main shaft does not come loose.

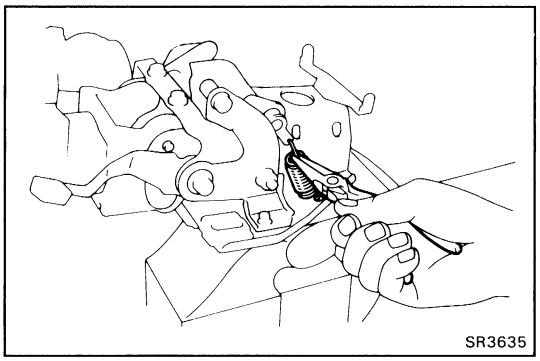

10. REMOVE TENSION SPRING

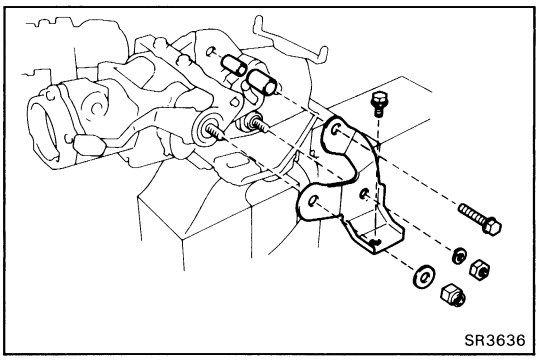

11. REMOVE TILT LEVER RETAINER

(a) Remove the two bolts and two nuts.

(b) Remove the tilt lever retainer, collar and cushion.

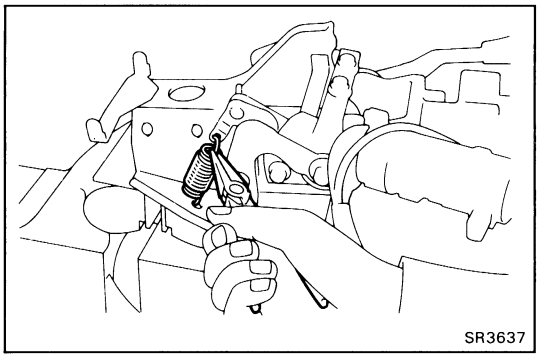

12. REMOVE TENSION SPRING

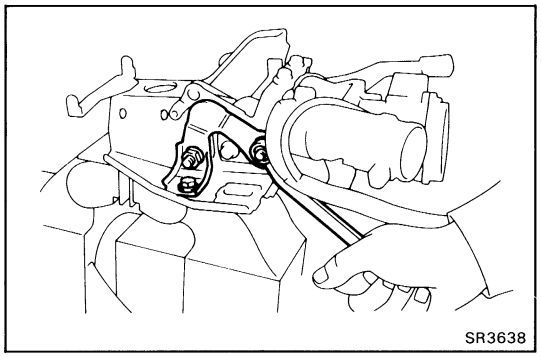

13. REMOVE TILT LEVER RETAINER

Remove the bolt, two nuts and tilt lever retainer.

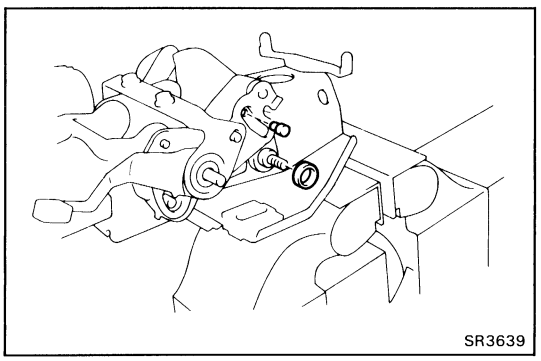

14. REMOVE SPACER AND PIN

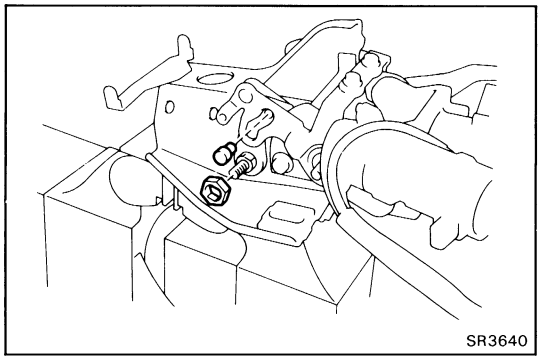

15. REMOVE TILT STEERING ADJUSTING NUT AND PIN

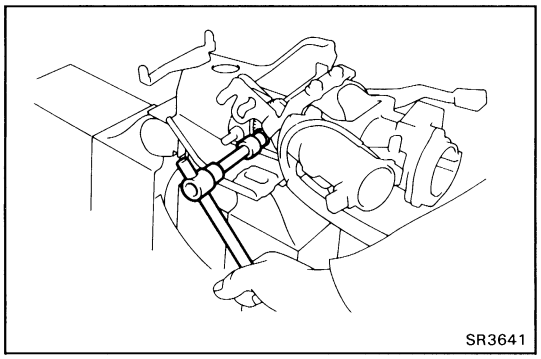

16. REMOVE TILT STEERING SUPPORT STOPPER BOLT

Remove the nut, support stopper bolt and cover.

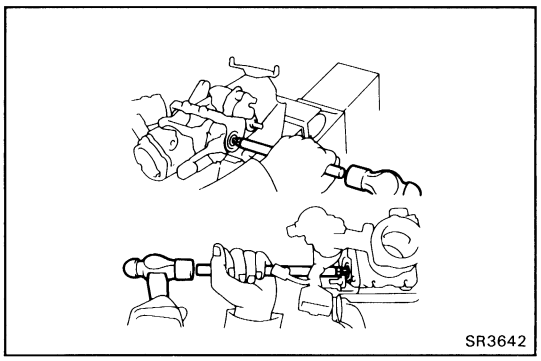

17. REMOVE SERRATION BOLTS

Temporarily install the two nuts to the two serration bolts end for protection, and tap out the two serration bolts from the upper bracket.

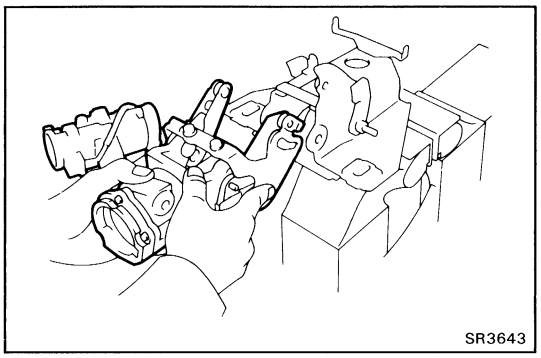

18. REMOVE COLUMN UPPER BRACKET

(a) Remove the column upper bracket from the breakaway bracket.

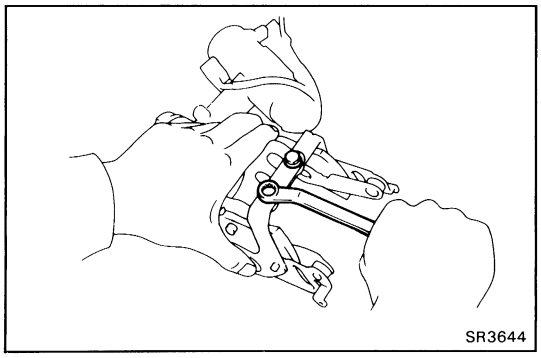

(b) Remove the two bolts.

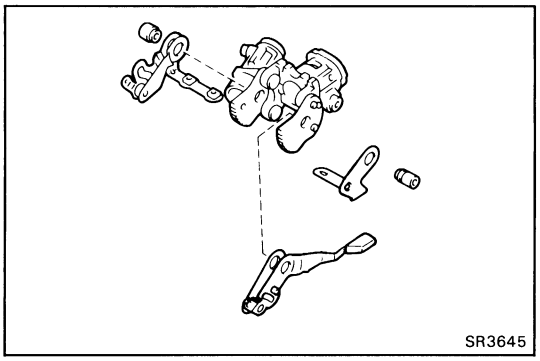

(c) Remove the following parts:
- Tilt steering No.1 support collar
- Tilt lever
- No.1 tilt sub lever
- Tilt steering No.2 support collar
- No.2 tilt sub lever
- Support shim

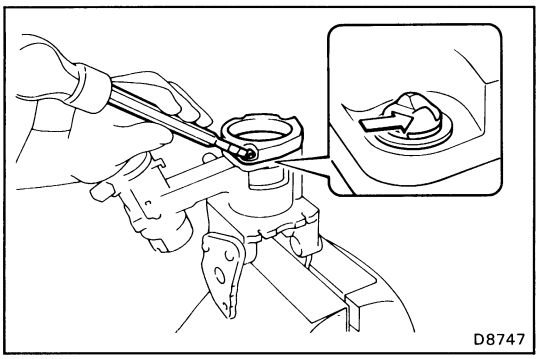

(d) Using a chisel, remove the steering shaft thrust stopper with the three screws.

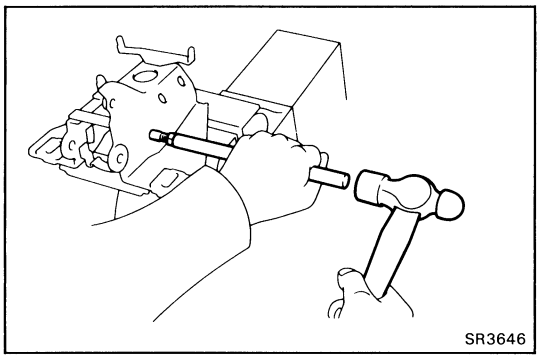

19. REMOVE TWO STEERING PAWLS

20. REMOVE TWO SERRATION BOLTS

Temporarily install the two nuts to the two serration bolts end for protection, and tap out the serration bolts from the breakaway bracket.

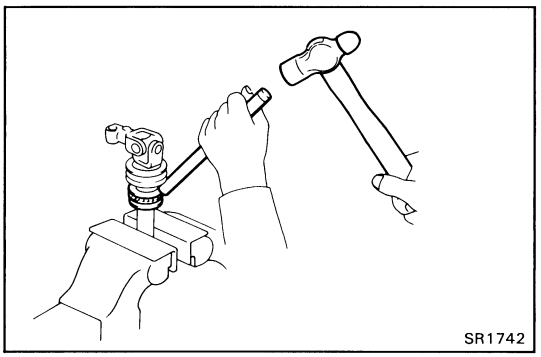

21. (w/ TEMS)
REMOVE STEERING SENSOR DISC

(a) Using a hammer and brass bar, drive out the steering sensor disc from the intermediate shaft.

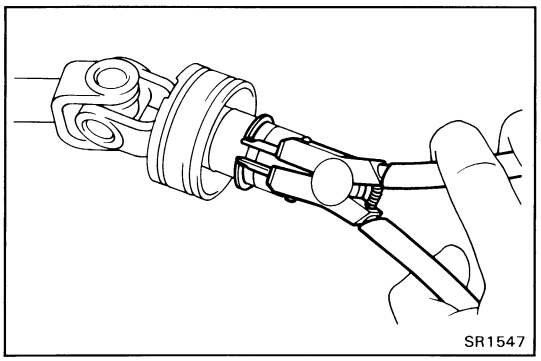

(b) Using snap ring pliers, remove the snap ring.

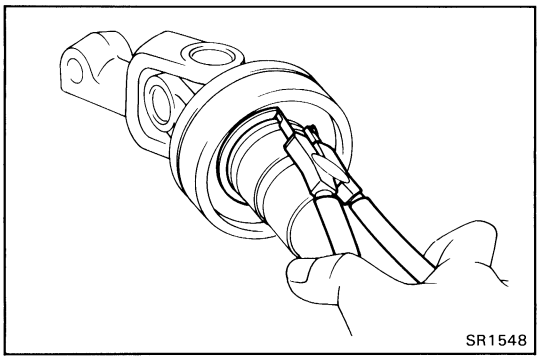

22. REMOVE THRUST STOPPER

(a) Using snap ring pliers, remove the snap ring.

(b) Remove the thrust stopper.

(c) Remove the O-ring from the thrust stopper.

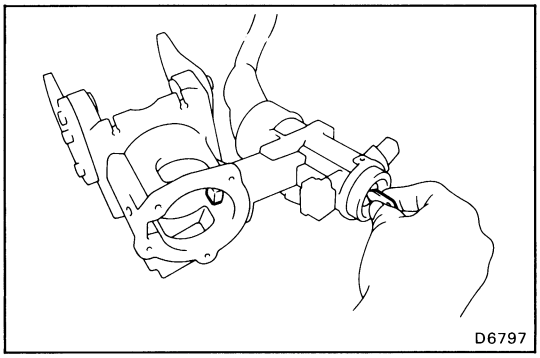

INSPECTION AND REPAIR OF STEERING COLUMN

1. INSPECT STEERING LOCK OPERATION

Check that the steering lock mechanism operates properly.

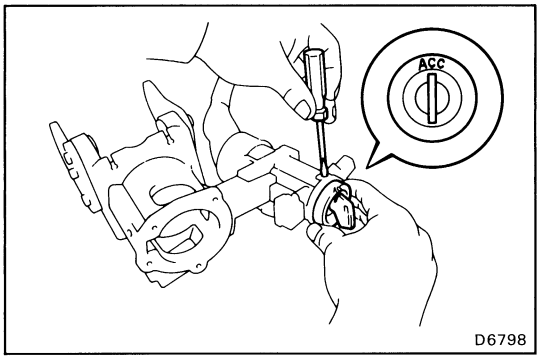

2. IF NECESSARY, REPLACE KEY CYLINDER

(a) Place the ignition key at the ACC position.

(b) Push down the stop key with a thin rod, and pull out the key cylinder.

(c) Make sure that the ignition key is at the ACC position.

(d) Install a new key cylinder.

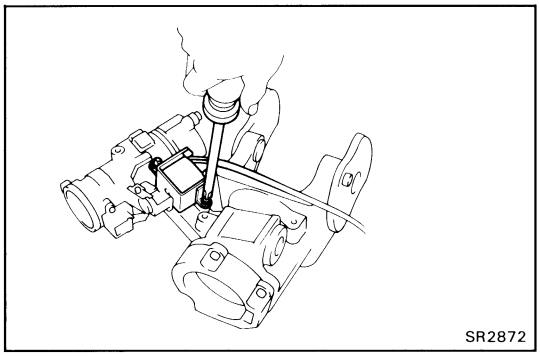

3. (w/ AT)
IF NECESSARY, REPLACE KEY INTERLOCK SOLENOID

(a) Remove the two screws and solenoid.

(b) Install a new solenoid with the two screws.

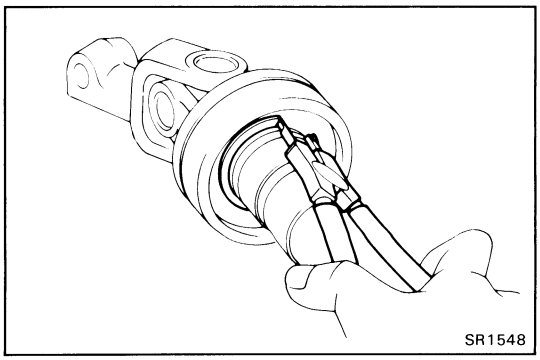

ASSEMBLY OF STEERING COLUMN

(See page SR-7)

1. COAT ALL RABBING PARTS WITH MP GREASE

2. INSTALL THRUST STOPPER

(a) Install a new O-ring to the thrust stopper.

(b) Install the thrust stopper.

(c) Using snap ring pliers, install the snap ring.

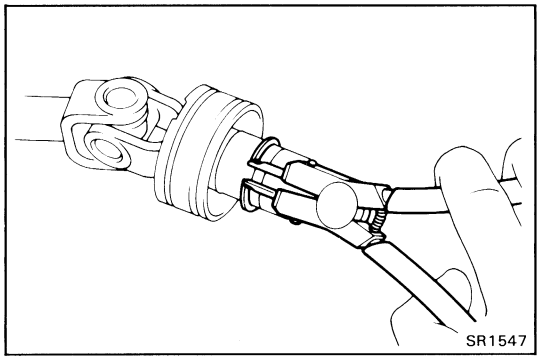

3. (w/ TEMS)
INSTALL STEERING SENSOR DISC

(a) Using snap ring pliers, install the snap ring.

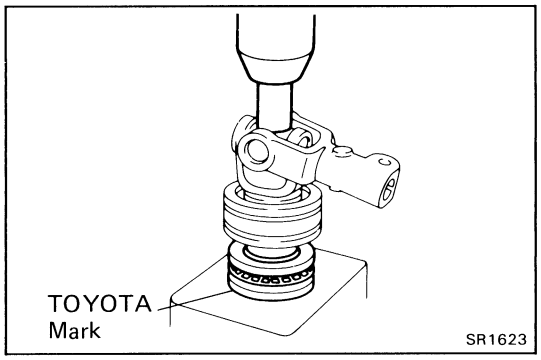

(b) Using a 14 mm socket wrench, press in a new steering sensor disc.

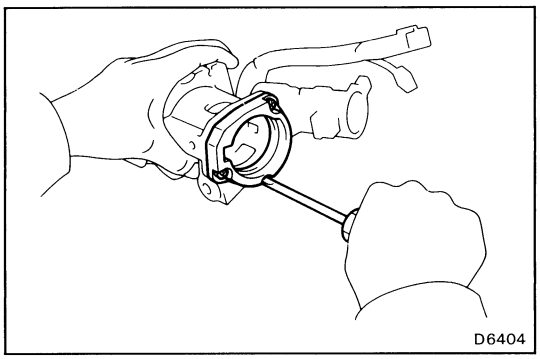

4. INSTALL STEERING SHAFT THRUST STOPPER

Install the steering shaft thrust stopper with three new screws.

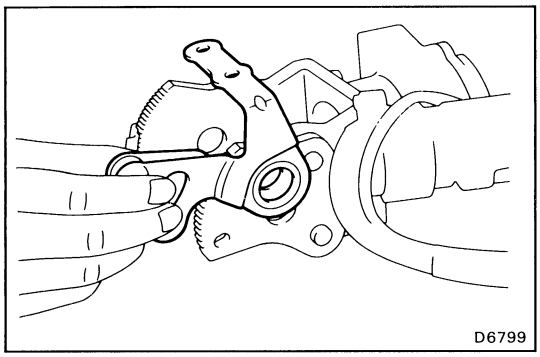

5. INSTALL NO.2 TILT SUB LEVER

Install the No.2 tilt sub lever to the column upper bracket.

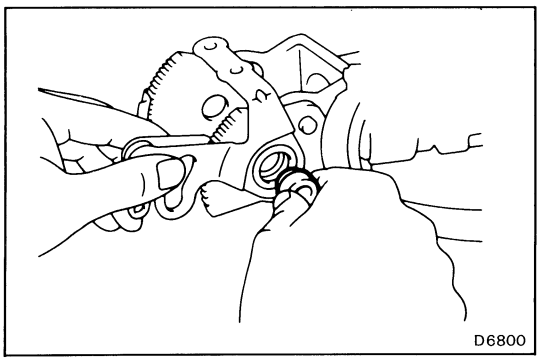

6. SELECT NO.2 SUPPORT COLLAR

Select a No.2 collar which will eliminate all play.

Outer diameter mm (in.)	
17.989 – 17.996	(0.7082 – 0.7085)
17.996 – 18.003	(0.7085 – 0.7088)
18.003 – 18.010	(0.7088 – 0.7091)
18.010 – 18.017	(0.7091 – 0.7093)
18.017 – 18.024	(0.7093 – 0.7096)

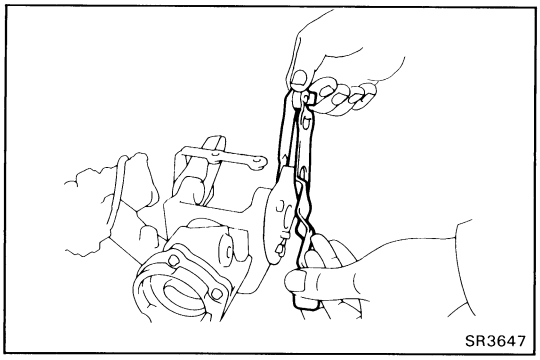

7. INSTALL TILT LEVER

Install the tilt lever to the column upper bracket.

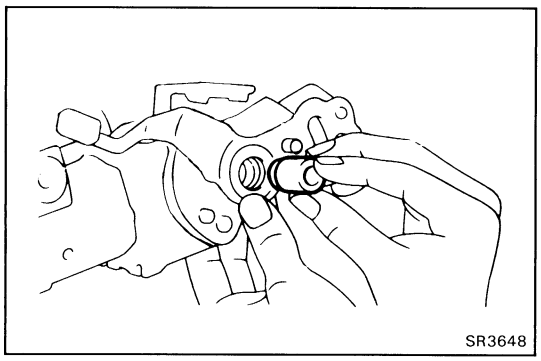

8. SELECT NO.1 SUPPORT COLLAR

Select a No.1 collar which will eliminate all play.

Outer diameter mm (in.)	
17.989 – 17.996	(0.7082 – 0.7085)
17.996 – 18.003	(0.7085 – 0.7088)
18.003 – 18.010	(0.7088 – 0.7091)
18.010 – 18.017	(0.7091 – 0.7093)
18.017 – 18.024	(0.7093 – 0.7096)

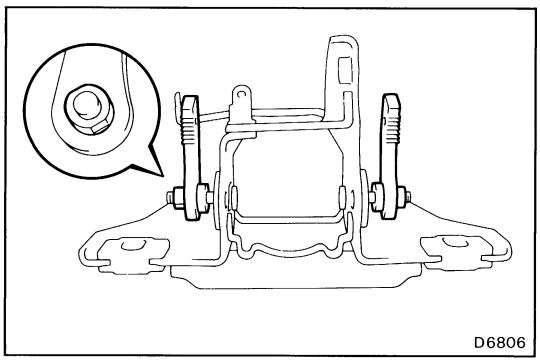

9. INSTALL TWO SERRATION BOLTS AND TWO TILT PAWLS

(a) Install the two serration bolts to the breakaway bracket.

(b) Install the two pawls and one of the bushing with cutout portion.

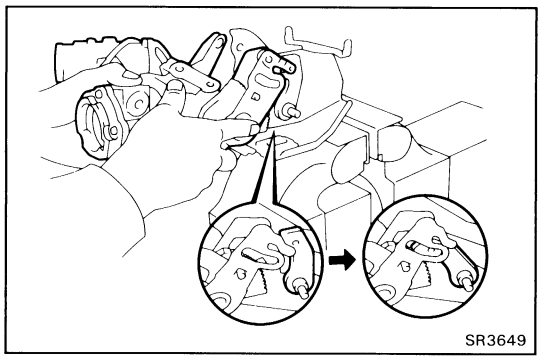

10. INSTALL COLUMN UPPER BRACKET

(a) With the column upper bracket partially installed to the breakaway bracket, move the pawl toward the column upper bracket side and then completely install the column upper bracket.

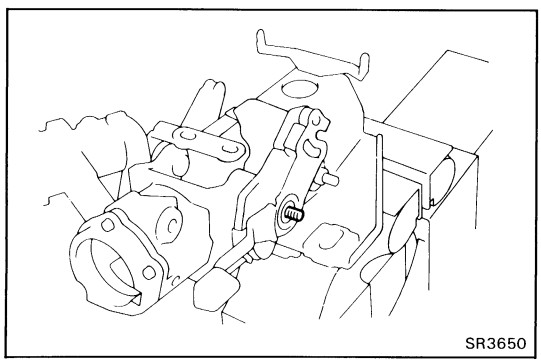

(b) Insert the serration bolt of No.1 support collar side.

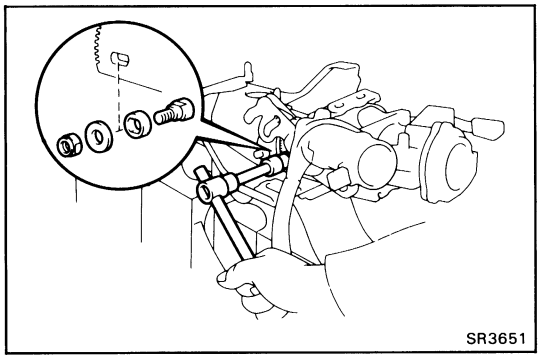

11. INSTALL SUPPORT STOPPER BOLT

Install the cover to the bolt, and align the cutout portion of the support stopper bolt and upper bracket, install it from inside of the column upper bracket.

Torque: 110 kg-cm (8 ft-lb, 11 N·m)

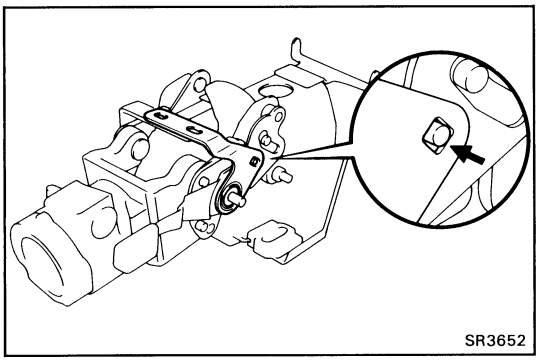

12. INSTALL NO.1 TILT SUB LEVER

Insert the tilt lever pin into the hole of the No.1 tilt sub lever.

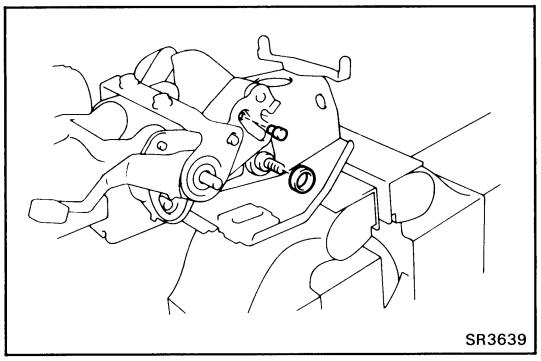

13. INSTALL SPACER AND PIN

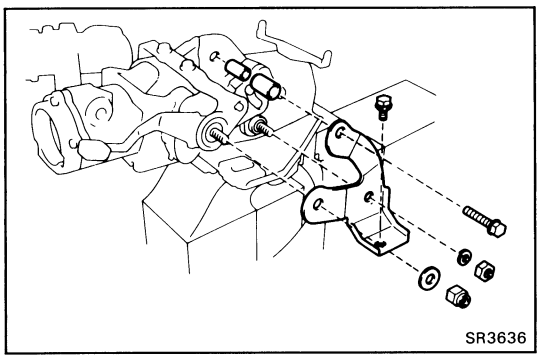

14. INSTALL TILT LEVER RETAINER

(a) Install the tilt lever retainer with the collar, cushion and bolt.

Torque: 195 kg-cm (14 ft-lb, 19 N·m)

(b) Temporarily install the two nuts and washers.

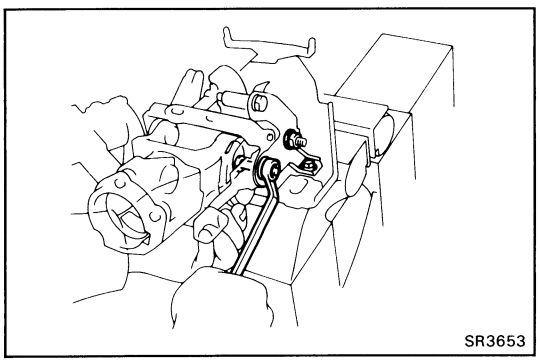

(c) Hold the serration bolt and tighten the two nuts.

Torque: 195 kg-cm (14 ft-lb, 19 N·m)

(d) Install and torque the bolt.

Torque: 80 kg-cm (69 in.-lb, 7.8 N·m)

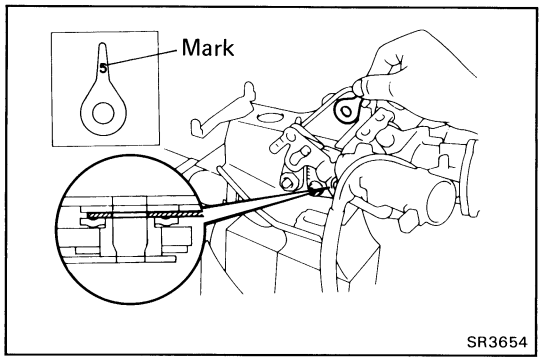

15. SELECT SUPPORT SHIM

Select one or two shims which fit snugly when pressed in by hand.

Mark	Thickness mm (in.)	
None	0.197 – 0.203	(0.0078 – 0.0080)
5	0.495 – 0.505	(0.0195 – 0.0199)
8	0.795 – 0.805	(0.0313 – 0.0317)
14	1.395 – 1.405	(0.0549 – 0.0553)
18	1.795 – 1.805	(0.0707 – 0.0711)

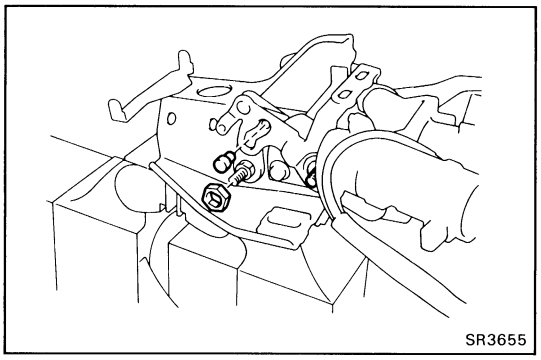

16. INSTALL SERRATION BOLT, TILT STEERING ADJUSTING NUT AND PIN

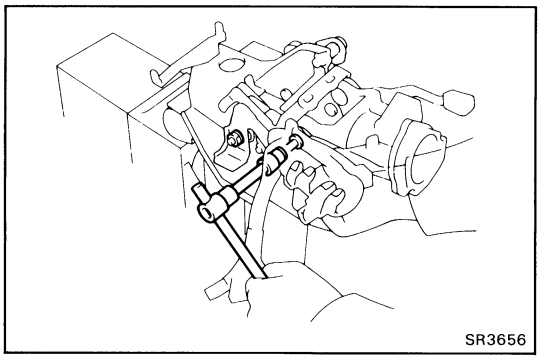

17. INSTALL TILT LEVER RETAINER

(a) Install the tilt lever retainer.

(b) Install the two nuts and washers.

(c) Holding the serration bolts and tighten the nuts.

Torque: 195 kg-cm (14 ft-lb, 19 N·m)

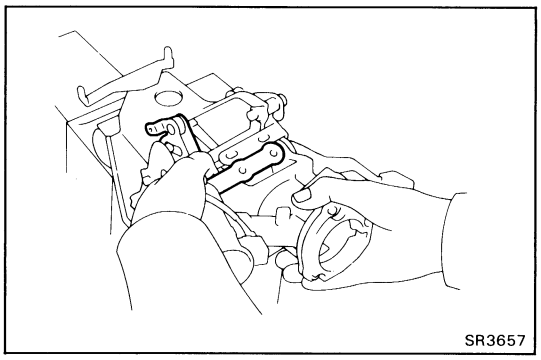

18. ADJUST ENGAGEMENT OF NO.2 TILT SUB LEVER

(a) Pulling the No.2 tilt sub lever, disengage the pawl from the column upper bracket.

(b) Moving the column upper bracket up or down, engage the opposite pawl with the column upper bracket.

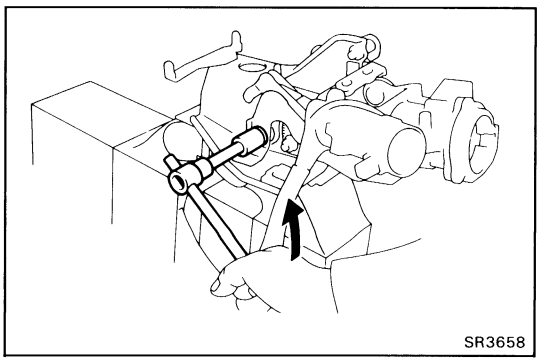

(c) Loosen the nut until the tilt steering adjusting nut turns smoothly.

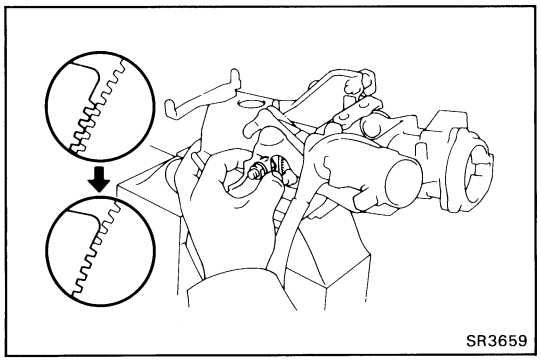

(d) Pushing the pawl toward the column upper bracket, engage the pawl with the upper bracket by moving the adjusting nut.

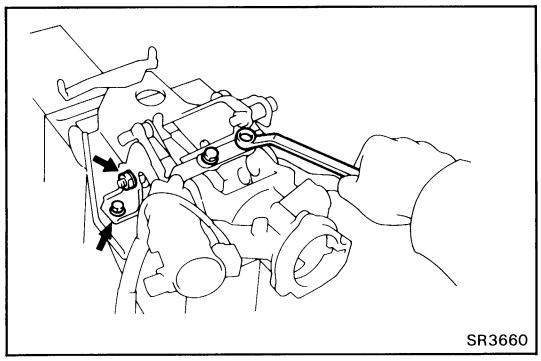

(e) Tighten the nut and bolt as in figure and tighten the right and left bolts of the tilt lever.

Torque: Nut 195 kg-cm (14 ft-lb, 19 N·m)
Bolt 80 kg-cm (69 in.-lb, 7.8 N·m)

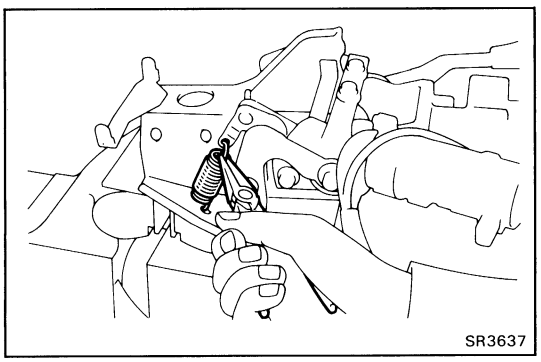

19. INSTALL TWO TENSION SPRINGS

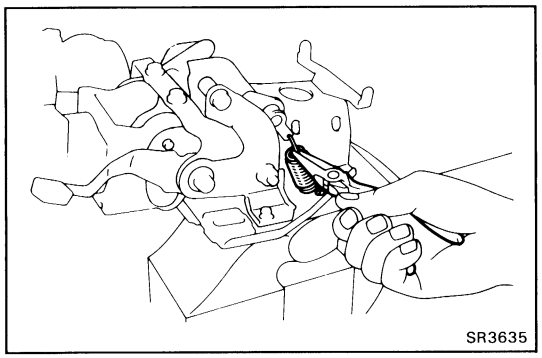

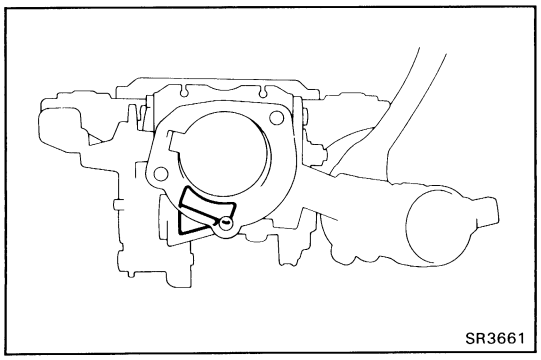

20. INSTALL MAIN SHAFT ASSEMBLY

(a) Install the two lock wedges to the column upper bracket.

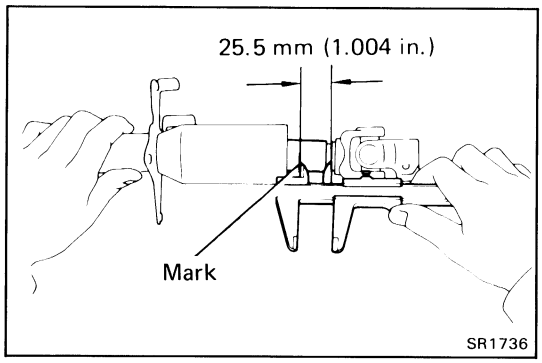

(b) Mark the main shaft as shown.

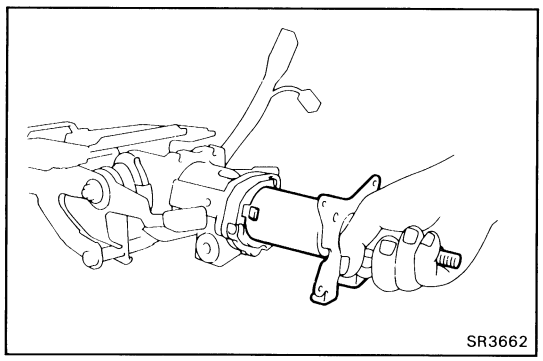

(c) Place the ignition key at the ACC position.

(d) Insert the main shaft assembly into the upper bracket.

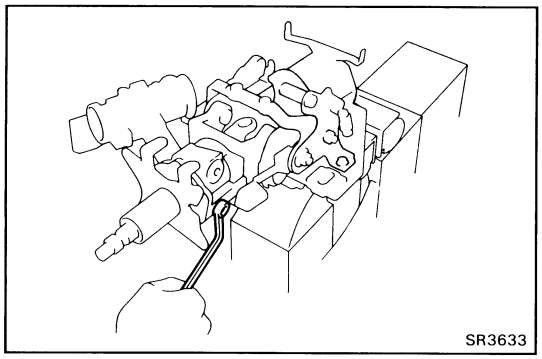

(e) Install the column tube stopper.

Torque: 80 kg-cm (69 in.-lb, 7.8 N·m)

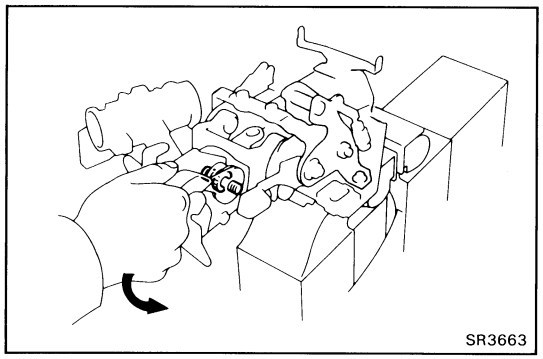

21. INSTALL TELESCOPIC LEVER LOCK BOLT

Tighten the telescopic lever lock bolt with the telescopic lever.

HINT: The bolt has LH threads.

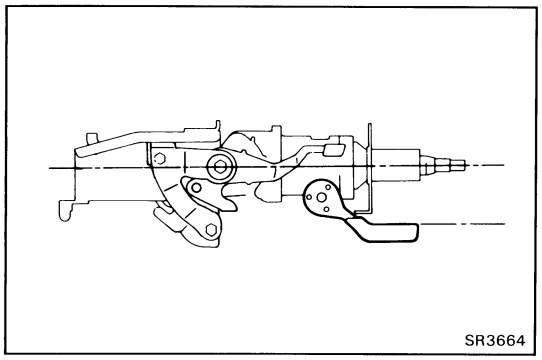

22. INSTALL TELESCOPIC LEVER

(a) Install the telescopic lever so it parallels the main shaft.

(b) Tighten the set nut.

Torque: 145 kg-cm (10 ft-lb, 14 N·m)

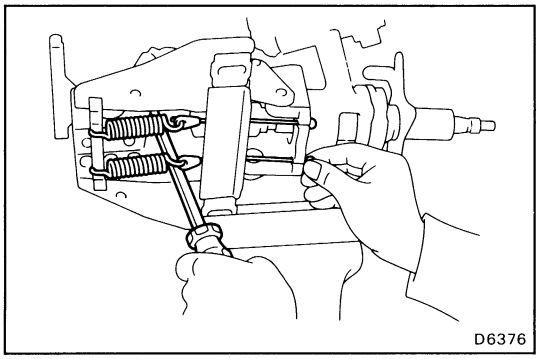

23. INSTALL TENSION SPRINGS AND CORDS

(a) Fully tilt the main shaft upward.

(b) Connect the spring and cord, and hook the spring to the hanger.

(c) Using a screwdriver, hook the cord end to the column upper bracket.

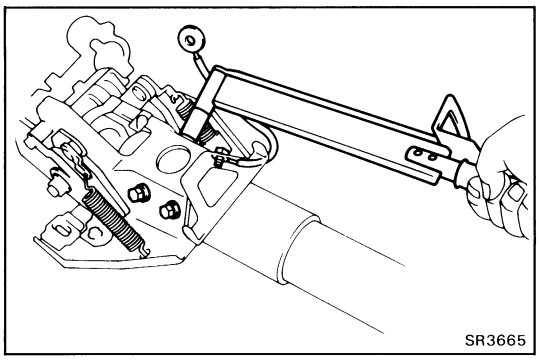

24. INSTALL COLUMN TUBE TO BREAKAWAY BRACKET

(a) Install the column tube to the breakaway bracket.

(b) Place the bond cable.

(c) Install and torque the four bolts.

Torque: 195 kg-cm (14 ft-lb, 19 N·m)

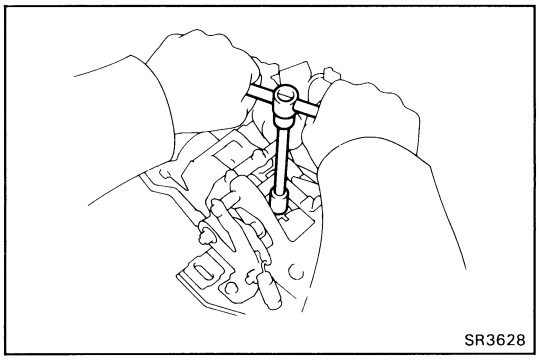

25. INSTALL INTERMEDIATE SHAFT TO COLUMN TUBE

(a) Coat the O-ring of the thrust stopper with MP grease.

(b) Install the intermediate shaft to the column tube.

(c) Connect the universal joint of main shaft and intermediate shaft.

Torque: 260 kg-cm (19 ft-lb, 25 N·m)

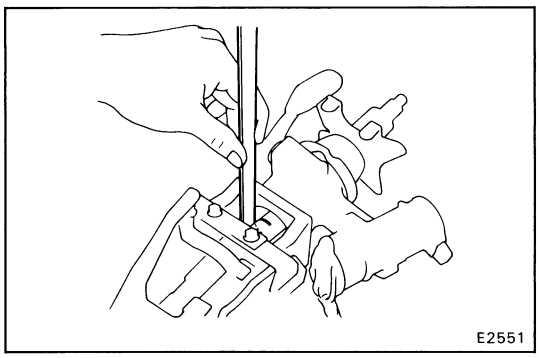

(d) Match the mark on the shaft accords with the upper bracket surface, as shown.

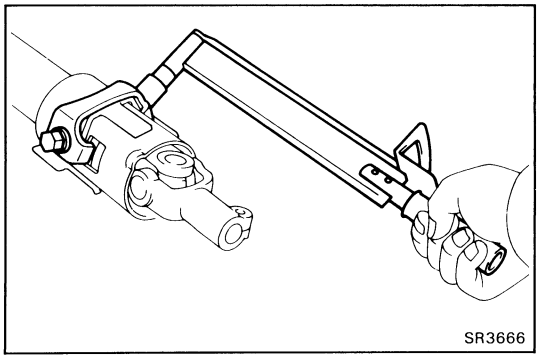

(e) Install the retainer bracket and two bolts.

(f) Torque the two bolts.

Torque: 280 kg-cm (20 ft-lb, 27 N·m)

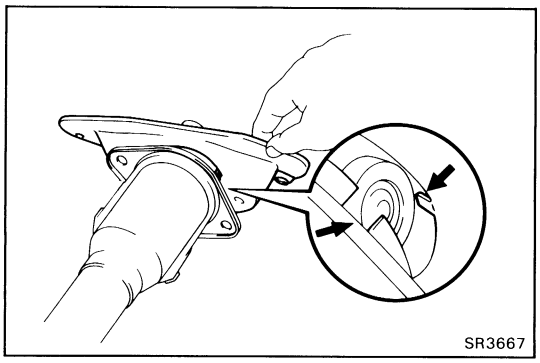

26. INSTALL COLUMN HOLE COVER

(a) Install a new O-ring and cover plate to the column tube.

(b) Align the cutout portion of the column tube to the protrusion of the hole cover, and install with the two bolts.

Torque: 130 kg-cm (9 ft-lb, 13 N·m)

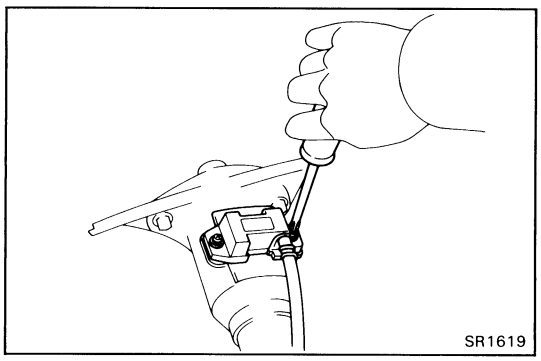

27. INSTALL IGNITION KEY LIGHT WITH SCREW

28. (w/ TEMS)
INSTALL STEERING SENSOR

Install the steering sensor with the two screws.

HINT: Check that there is no sound of contact between the sensor and sensor disc when the shaft is rotated.

CANADA

COMPONENTS

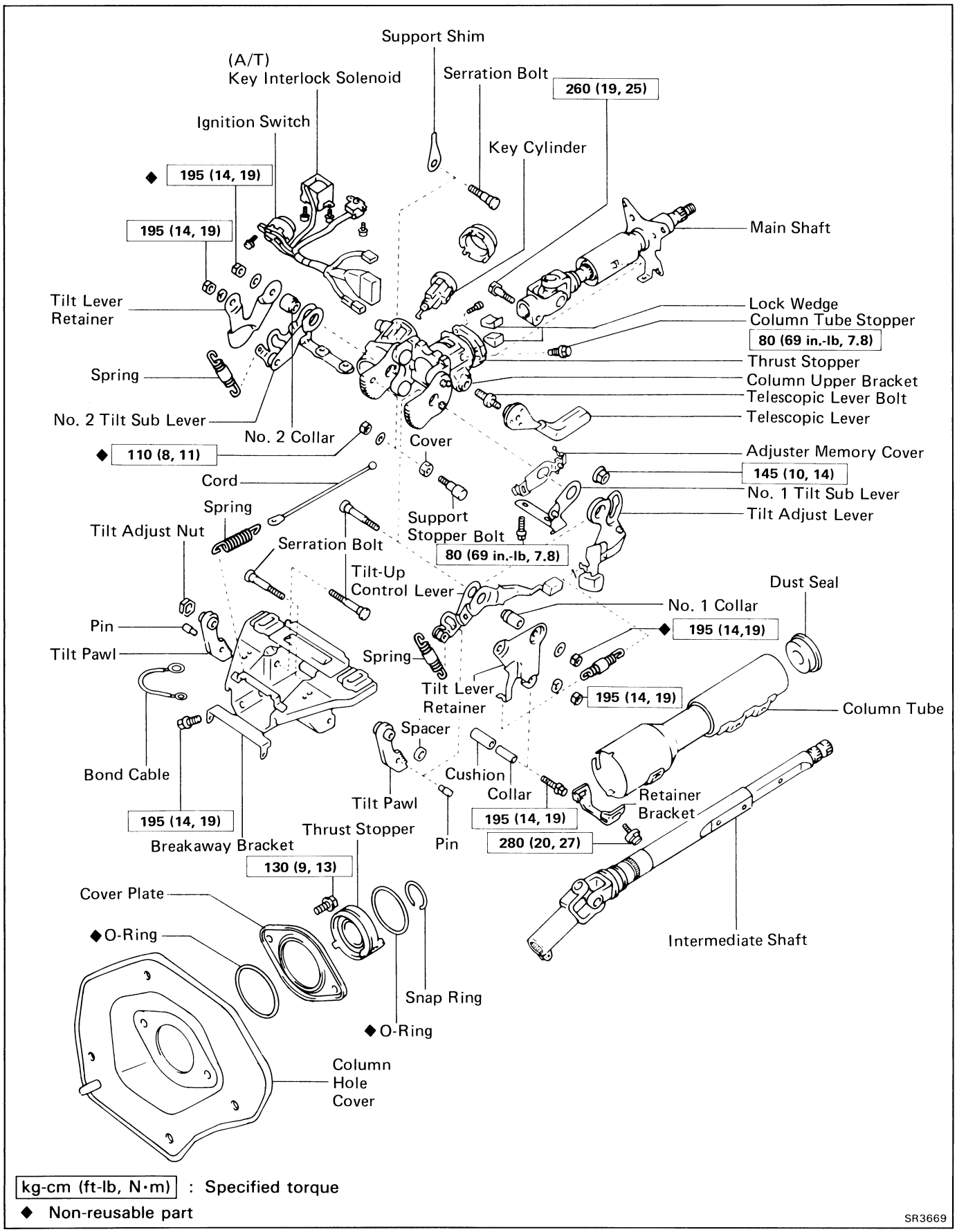

kg-cm (ft-lb, N·m) : Specified torque

◆ Non-reusable part

SR3669

DISASSEMBLY OF STEERING COLUMN

1. REMOVE IGNITION KEY LIGHT

Remove the screw and ignition key light.

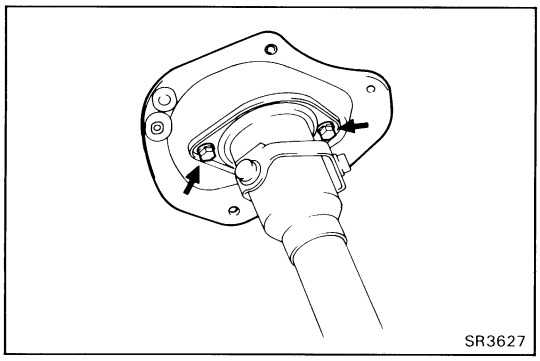

2. REMOVE COLUMN HOLE COVER

(a) Remove the two bolts and column hole cover.

(b) Remove the O-ring and cover plate.

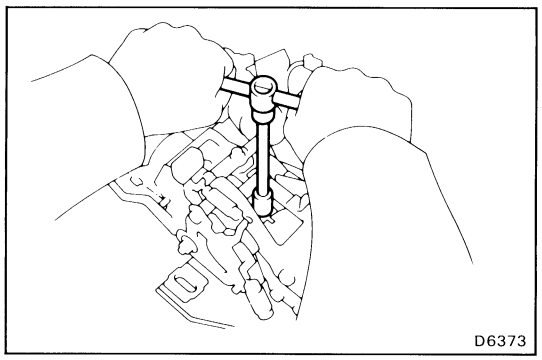

3. REMOVE INTERMEDIATE SHAFT

(a) Remove the bolt from the main shaft.

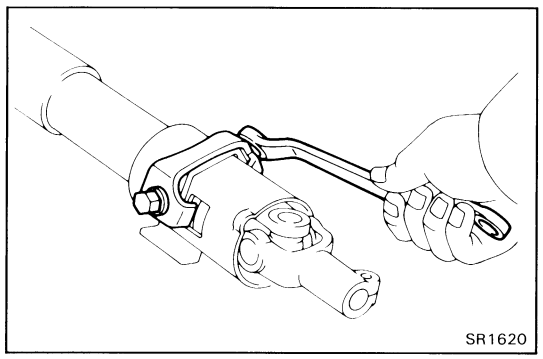

(b) Remove the two set bolts and retainer bracket.

(c) Pull out the intermediate shaft from the column tube.

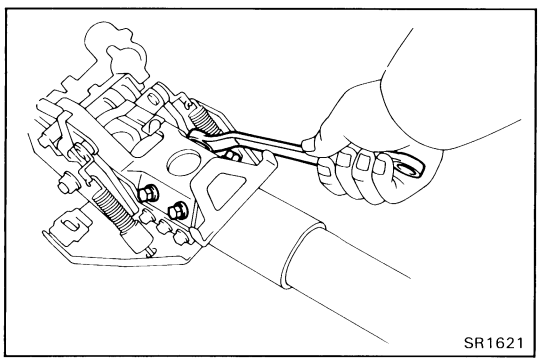

4. REMOVE COLUMN TUBE

Remove the four breakaway bracket bolts, and pull out the column tube.

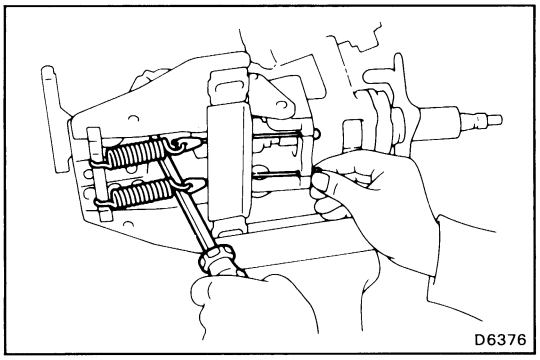

5. REMOVE TENSION SPRINGS AND CORDS

(a) Fully tilt the main shaft upward.

(b) Using a screwdriver, pry out the cord tip and remove the springs and cords.

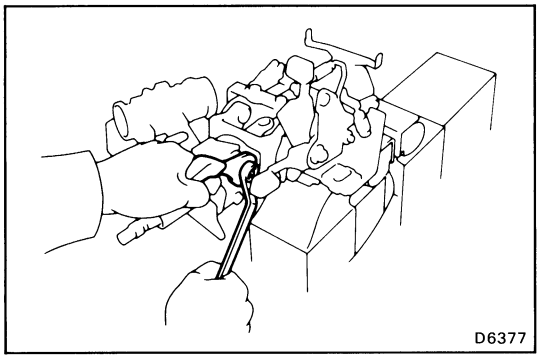

6. REMOVE TELESCOPIC LEVER

Remove the nut and telescopic lever.

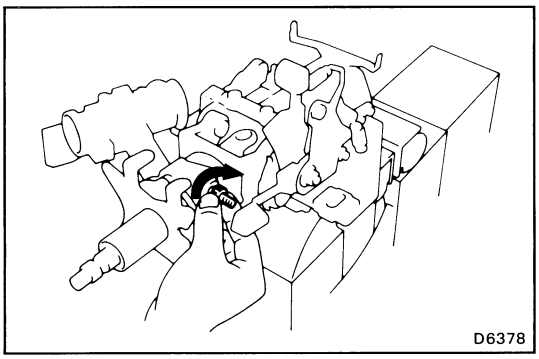

7. REMOVE TELESCOPIC LEVER LOCK BOLT

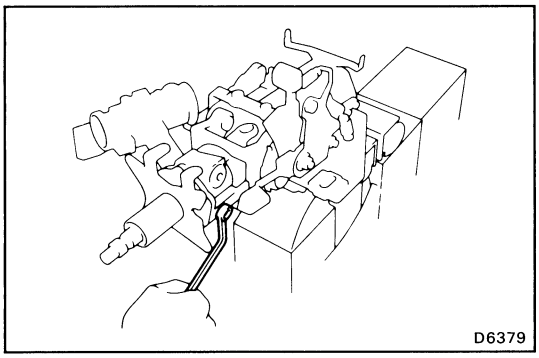

8. REMOVE MAIN SHAFT ASSEMBLY

(a) Remove the column tube stopper.

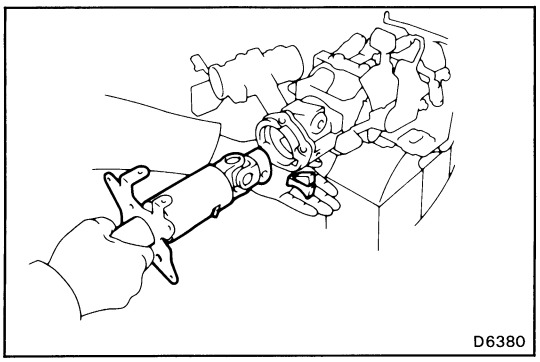

(b) Pull out the main shaft assembly and then catch the two lock wedges by hand.

HINT: Be careful the spline part of the main shaft does not come loose.

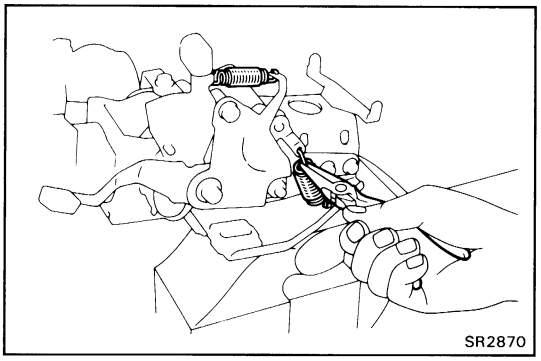

9. REMOVE TWO TENSION SPRINGS

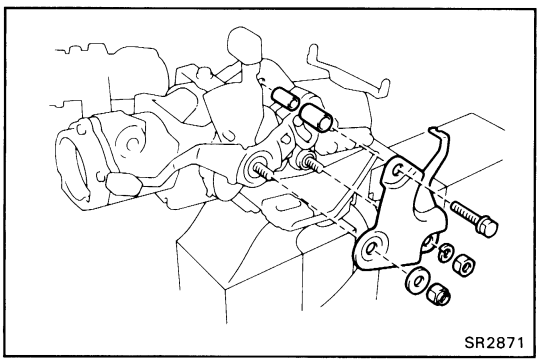

10. REMOVE TILT LEVER RETAINER

(a) Remove the bolt and two nuts.

(b) Remove the tilt lever retainer, collar and cushion.

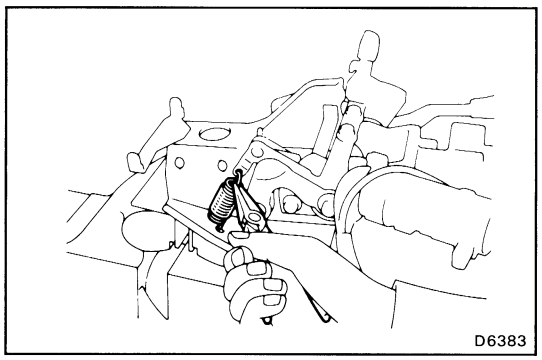

11. REMOVE TENSION SPRING

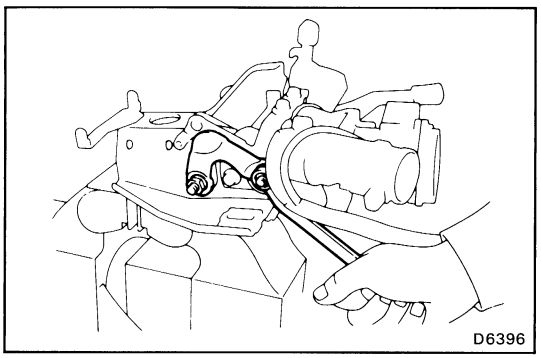

12. REMOVE TILT LEVER RETAINER

Remove the two nuts and tilt lever retainer.

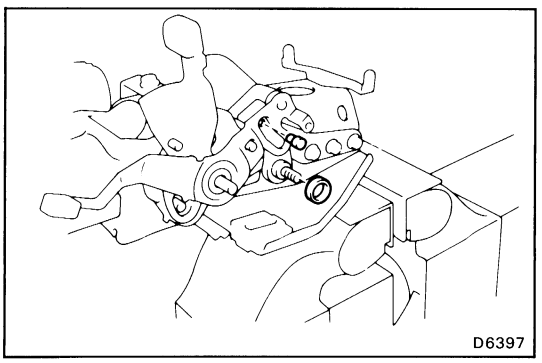

13. REMOVE SPACER AND PIN

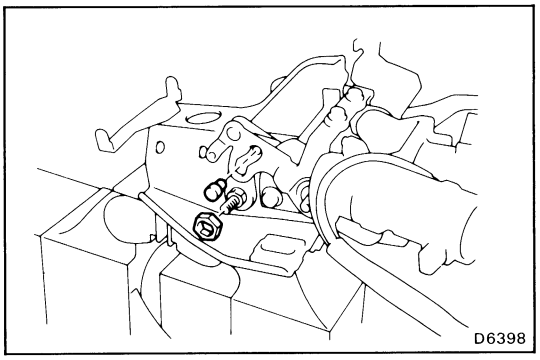

14. REMOVE TILT STEERING ADJUSTING NUT AND PIN

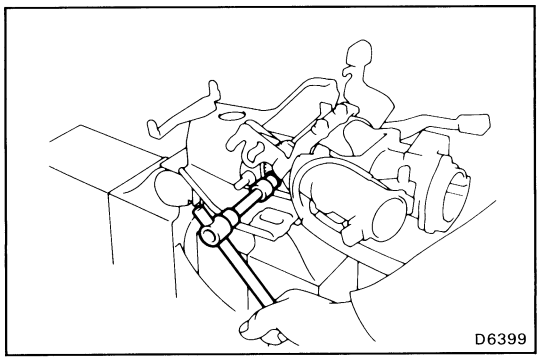

15. REMOVE TILT STEERING SUPPORT STOPPER BOLT

Remove the nut, support stopper bolt and cover.

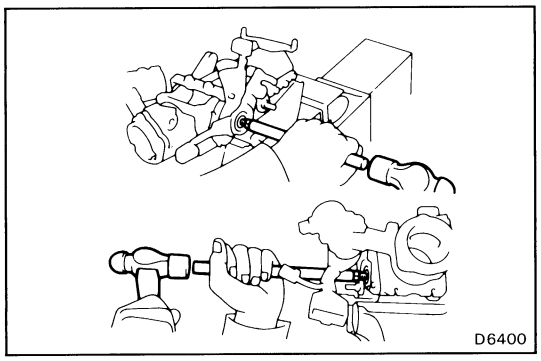

16. REMOVE SERRATION BOLTS

Temporarily install the two nuts to the two serration bolts end for protection, and tap out the two serration bolts from the upper bracket.

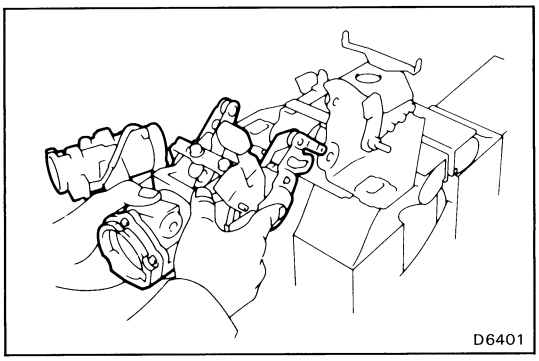

17. REMOVE COLUMN UPPER BRACKET

(a) Remove the column upper bracket from the breakaway bracket.

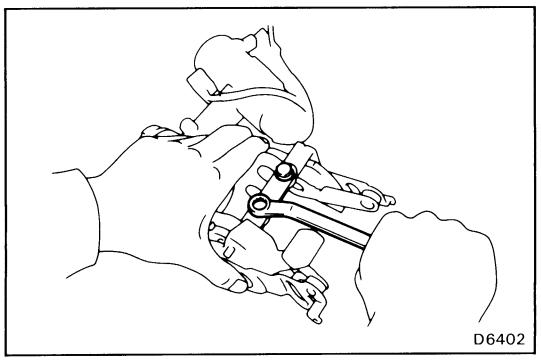

(b) Remove the two bolts.

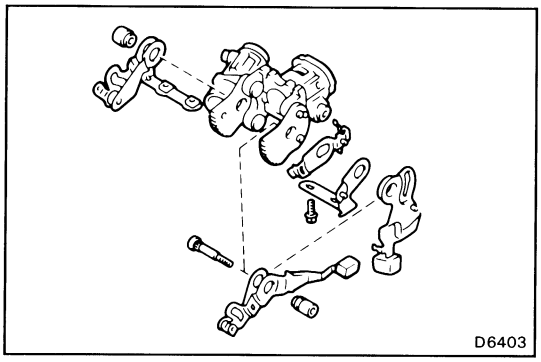

(c) Remove the following parts:
- Tilt steering No.1 support collar
- Tilt-up control lever
- Tilt adjust lever
- No.1 tilt sub lever
- Adjuster memory cover
- Tilt steering No.2 support collar
- No.2 tilt sub lever
- Support shim

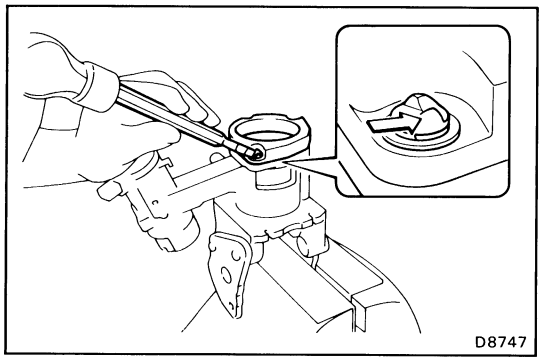

(d) Using a chisel, remove the steering shaft thrust stopper with the three screws.

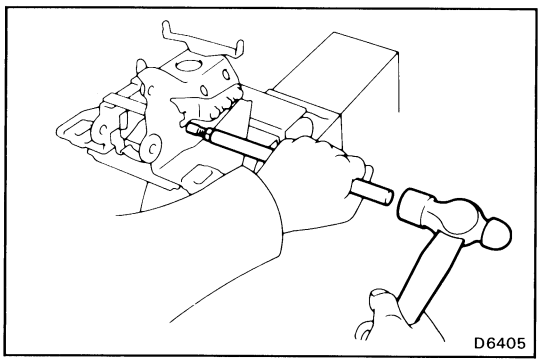

18. REMOVE TWO STEERING PAWLS

19. REMOVE TWO SERRATION BOLTS

Temporarily install the two nuts to the two serration bolts end for protection, and tap out the serration bolts from the breakaway bracket.

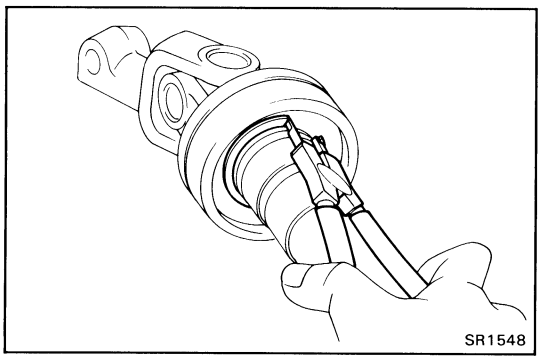

20. REMOVE THRUST STOPPER

(a) Using snap ring pliers, remove the snap ring.

(b) Remove the thrust stopper.

(c) Remove the O-ring from the thrust stopper.

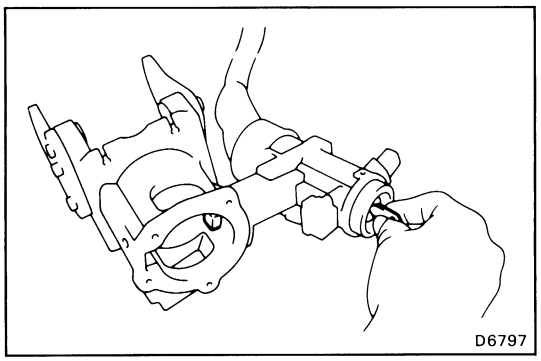

INSPECTION AND REPAIR OF STEERING COLUMN

1. INSPECT STEERING LOCK OPERATION

Check that the steering lock mechanism operates properly.

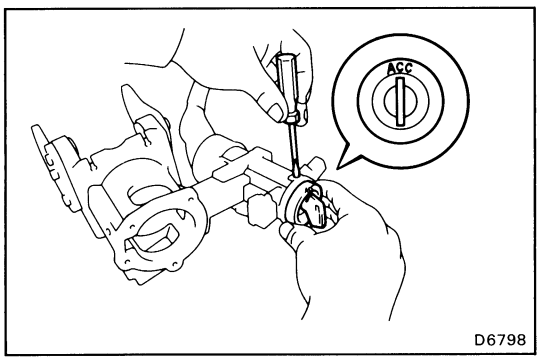

2. IF NECESSARY, REPLACE KEY CYLINDER

(a) Place the ignition key at the ACC position.

(b) Push down the stop key with a thin rod, and pull out the key cylinder.

(c) Make sure that the ignition key is at the ACC position.

(d) Install a new key cylinder.

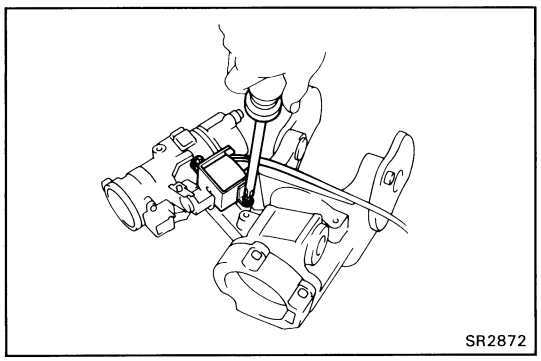

3. (w/ AT)
IF NECESSARY, REPLACE KEY INTERLOCK SOLENOID

(a) Remove the two screws and solenoid.

(b) Install a new solenoid with the two screws.

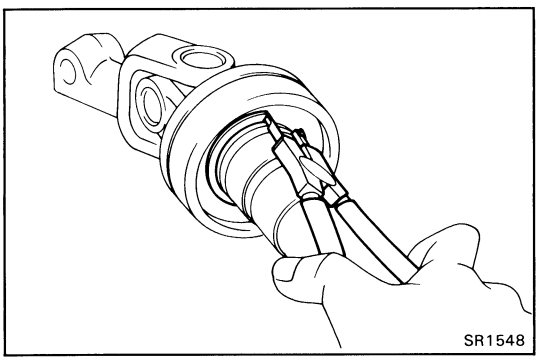

ASSEMBLY OF STEERING COLUMN

(See page SR-22)

1. COAT ALL RABBING PARTS WITH MP GREASE

2. INSTALL THRUST STOPPER

(a) Install a new O-ring to the thrust stopper.

(b) Install the thrust stopper.

(c) Using snap ring pliers, install the snap ring.

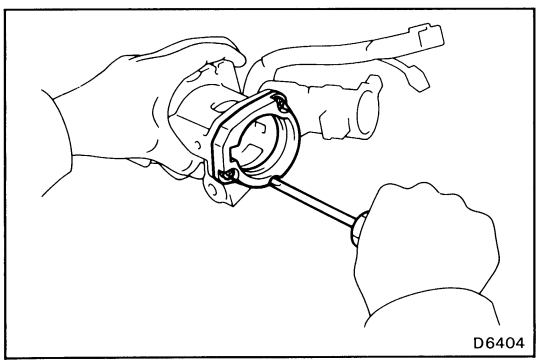

3. INSTALL STEERING SHAFT THRUST STOPPER

Install the steering shaft thrust stopper with three new screws.

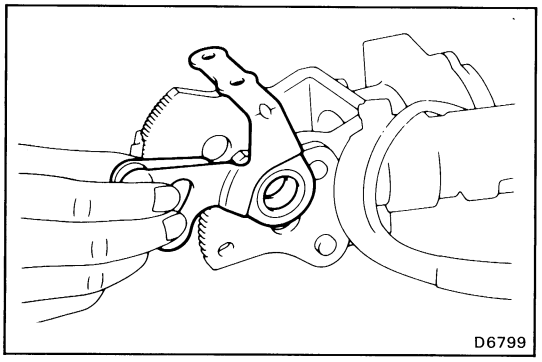

4. INSTALL NO.2 TILT SUB LEVER

Install the No.2 tilt sub lever to the column upper bracket.

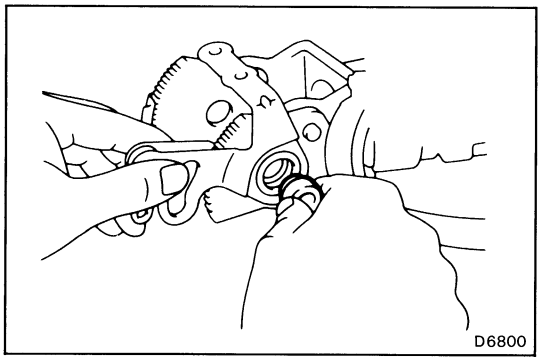

5. SELECT NO.2 SUPPORT COLLAR

Select a No.2 collar which will eliminate all play.

Outer diameter mm (in.)	
17.989 – 17.996	(0.7082 – 0.7085)
17.996 – 18.003	(0.7085 – 0.7088)
18.003 – 18.010	(0.7088 – 0.7091)
18.010 – 18.017	(0.7091 – 0.7093)
18.017 – 18.024	(0.7093 – 0.7096)

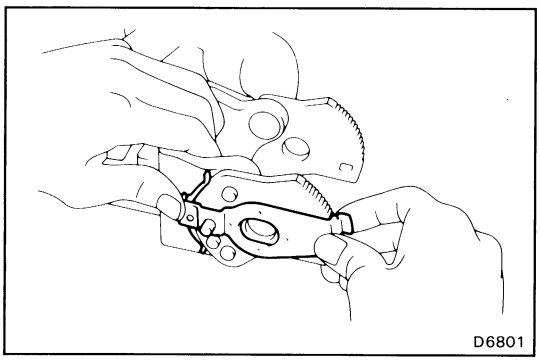

6. INSTALL ADJUSTER MEMORY COVER

Install the adjuster memory cover to the ratchet of the column upper bracket.

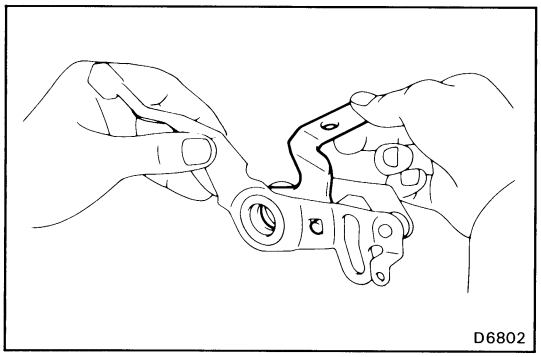

7. INSTALL TILT-UP CONTROL LEVER AND NO.1 TILT SUB LEVER

(a) Assemble the No.1 tilt sub lever to the tilt-up control lever.

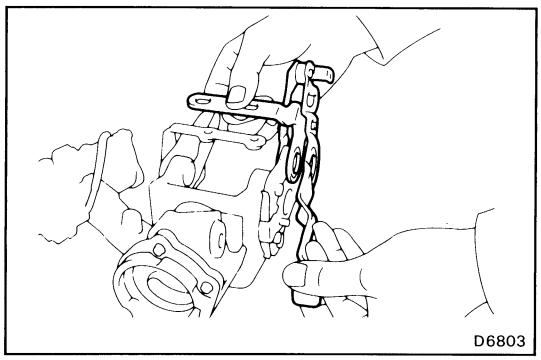

(b) Install the tilt-up control lever to the column upper bracket.

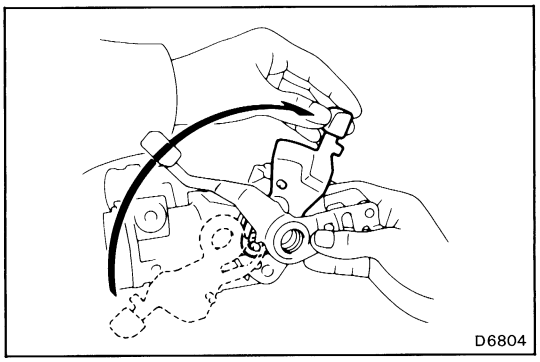

8. INSTALL TILT ADJUST LEVER

(a) Align the tilt adjust lever hole to the adjuster memory cover pin.

(b) Assemble the tilt adjust lever between the tilt-up control lever and No.1 tilt sub lever.

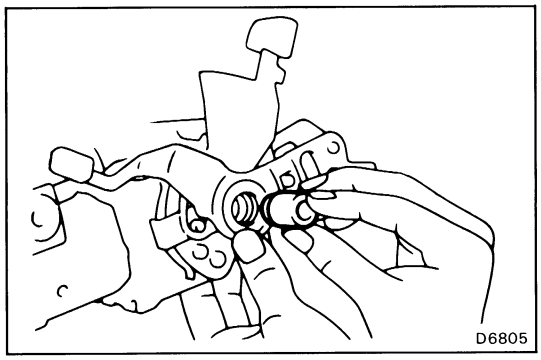

9. SELECT NO.1 SUPPORT COLLAR

Select a No.1 collar which will eliminate all play.

Outer diameter mm (in.)	
17.989 – 17.996	(0.7082 – 0.7085)
17.996 – 18.003	(0.7085 – 0.7088)
18.003 – 18.010	(0.7088 – 0.7091)
18.010 – 18.017	(0.7091 – 0.7093)
18.017 – 18.024	(0.7093 – 0.7096)

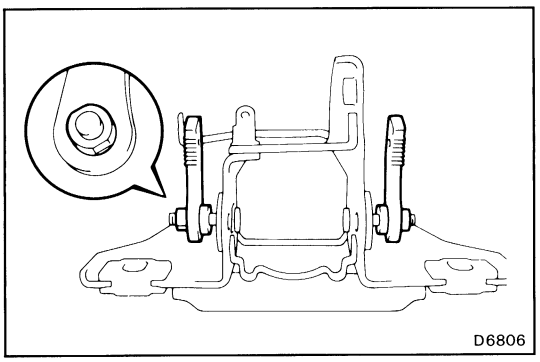

10. INSTALL TWO SERRATION BOLTS AND TWO TILT PAWLS

(a) Install the two serration bolts to the breakaway bracket.

(b) Install the two pawls and one of the bushing with cutout portion.

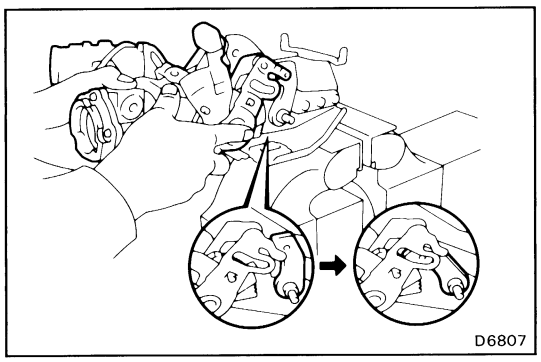

11. INSTALL COLUMN UPPER BRACKET

(a) With the column upper bracket partially installed to the breakaway bracket, move the pawl toward the column upper bracket side and then completely install the column upper bracket.

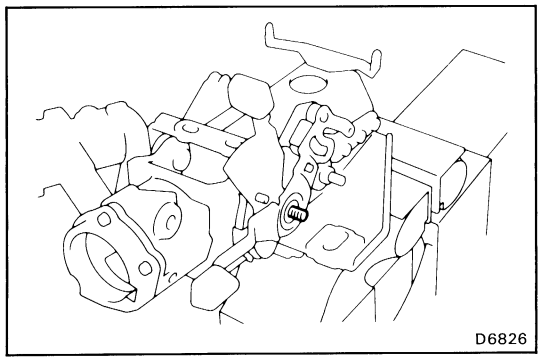

(b) Insert the serration bolt of No.1 support collar side.

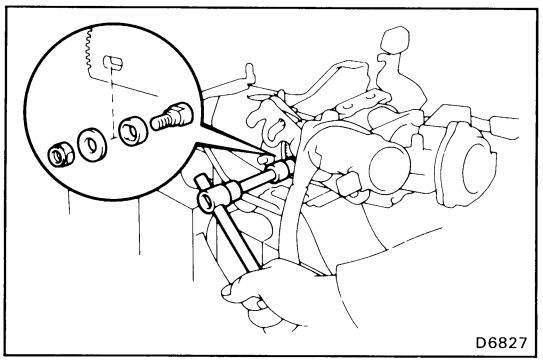

12. INSTALL SUPPORT STOPPER BOLT

Install the cover to the bolt, and align the cutout portion of the support stopper bolt and upper bracket, install it from inside of the column upper bracket.

Torque: 110 kg-cm (8 ft-lb, 11 N·m)

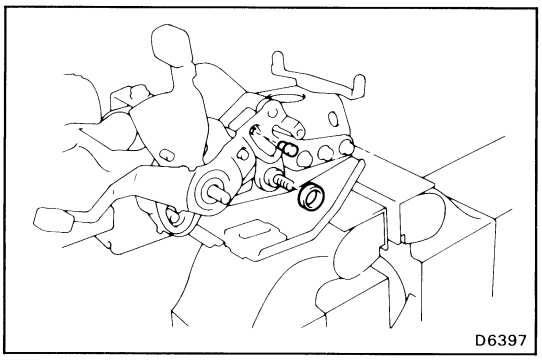

13. INSTALL SPACER AND PIN

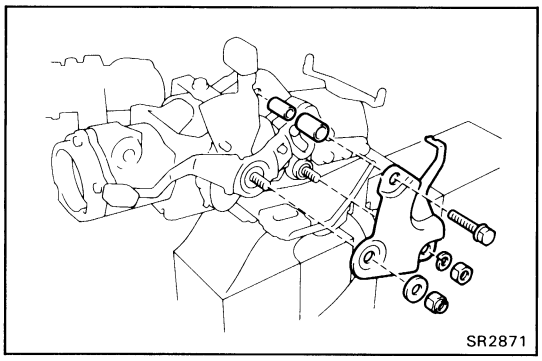

14. INSTALL TILT LEVER RETAINER

(a) Install the tilt lever retainer with the collar, cushion and bolt.

Torque: 195 kg-cm (14 ft-lb, 19 N·m)

(b) Temporarily install the two nuts and washers.

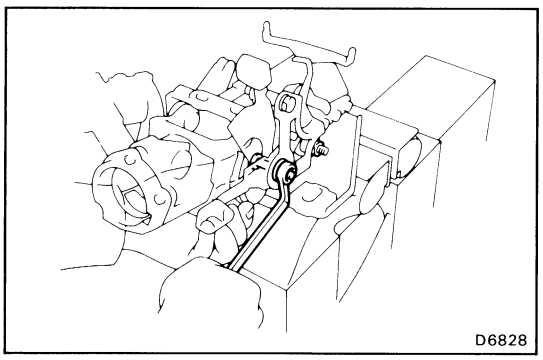

(c) Hold the serration bolt and tighten the two nuts.

Torque: 195 kg-cm (14 ft-lb, 19 N·m)

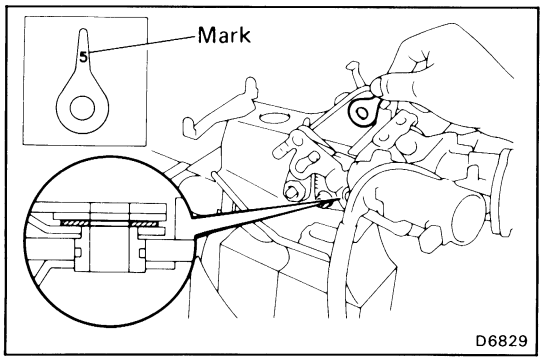

15. SELECT SUPPORT SHIM

Select one or two shims which fit snugly when pressed in by hand.

Mark	Thickness mm (in.)	
None	0.197 – 0.203	(0.0078 – 0.0080)
5	0.495 – 0.505	(0.0195 – 0.0199)
8	0.795 – 0.805	(0.0313 – 0.0317)
14	1.395 – 1.405	(0.0549 – 0.0553)
18	1.795 – 1.805	(0.0707 – 0.0711)

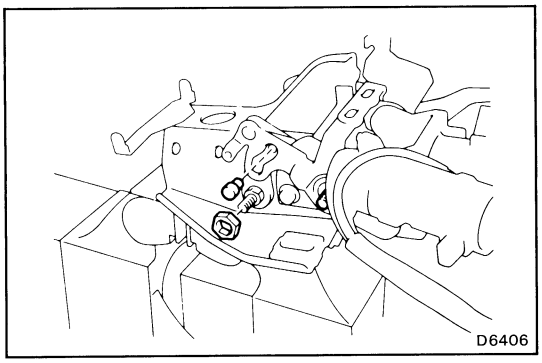

16. INSTALL SERRATION BOLT, TILT STEERING ADJUSTING NUT AND PIN

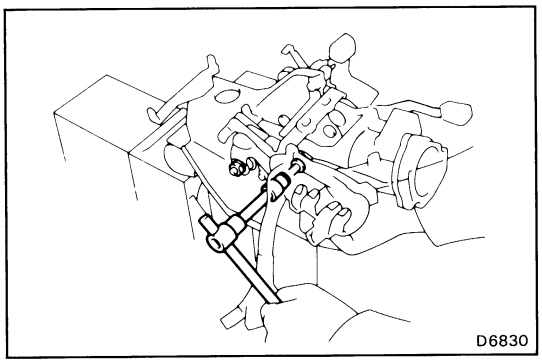

17. INSTALL TILT LEVER RETAINER

(a) Install the tilt lever retainer.

(b) Install the two nuts and washers.

(c) Holding the serration bolts and tighten the nuts.

Torque: 195 kg-cm (14 ft-lb, 19 N·m)

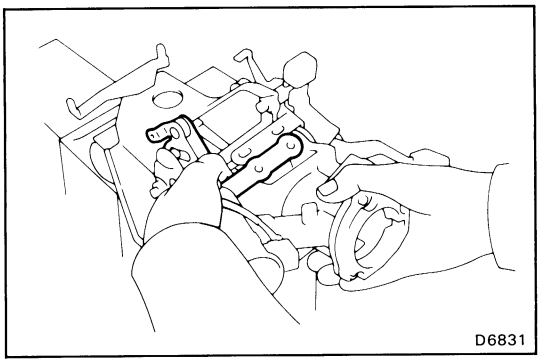

18. ADJUST ENGAGEMENT OF NO.2 TILT SUB LEVER

(a) Pulling the No.2 tilt sub lever, disengage the pawl from the column upper bracket.

(b) Moving the column upper bracket up or down, engage the opposite pawl with the column upper bracket.

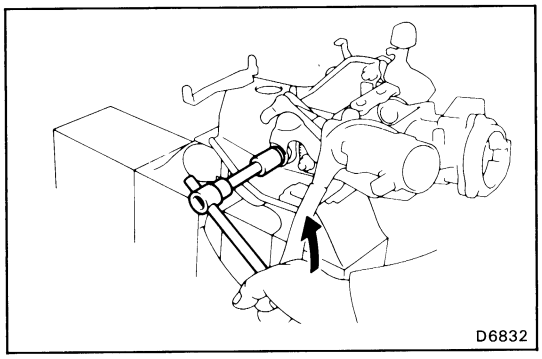

(c) Loosen the nut until the tilt steering adjusting nut turns smoothly.

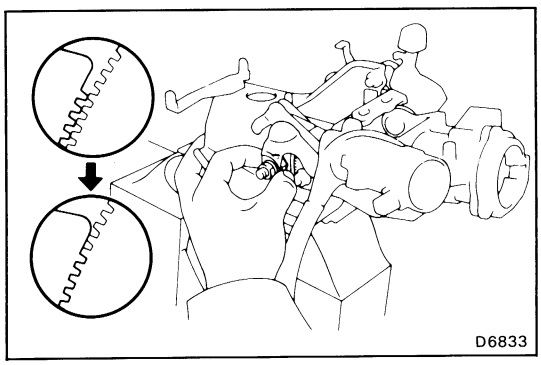

(d) Pushing the pawl toward the column upper bracket, engage the pawl with the upper bracket by moving the adjusting nut.

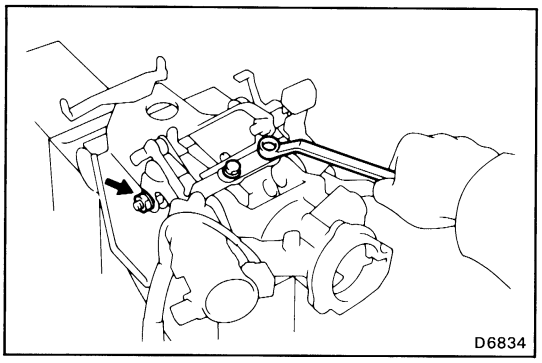

(e) Tighten the nut as in figure and tighten the right and left bolts of the tilt lever.

Torque: Nut 195 kg-cm (14 ft-lb, 19 N·m)
Bolt 80 kg-cm (69 in.-lb, 7.8 N·m)

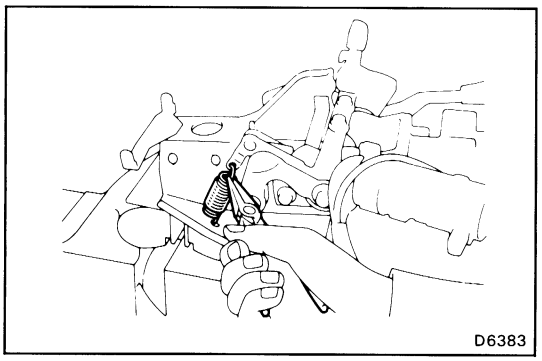

19. INSTALL TENSION SPRING

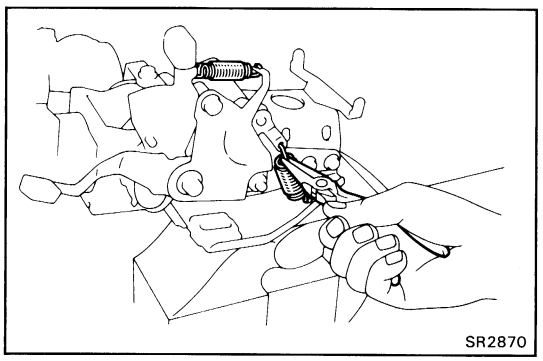

20. INSTALL TWO TENSION SPRINGS

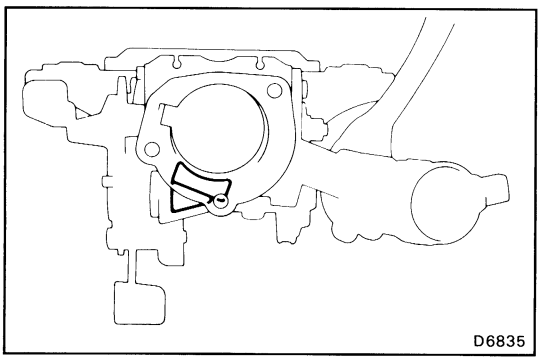

21. INSTALL MAIN SHAFT ASSEMBLY

(a) Install the two lock wedges to the column upper bracket.

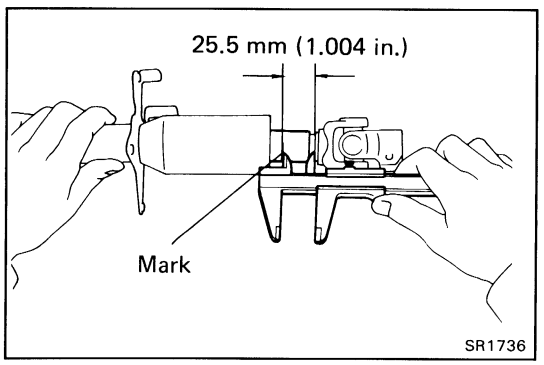

(b) Mark the main shaft as shown.

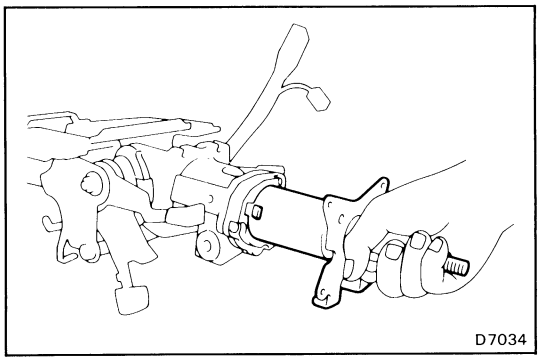

(c) Place the ignition key at the ACC position.

(d) Insert the main shaft assembly into the upper bracket.

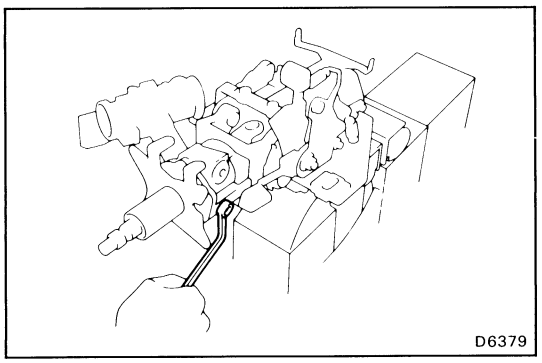

(e) Install the column tube stopper.

Torque: 80 kg-cm (69 in.-lb, 7.8 N·m)

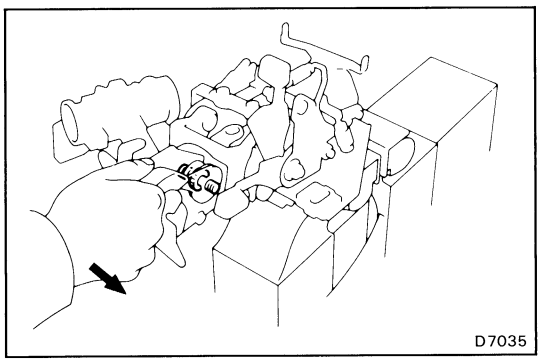

22. INSTALL TELESCOPIC LEVER LOCK BOLT

Tighten the telescopic lever lock bolt with the telescopic lever.

HINT: The bolt has LH threads.

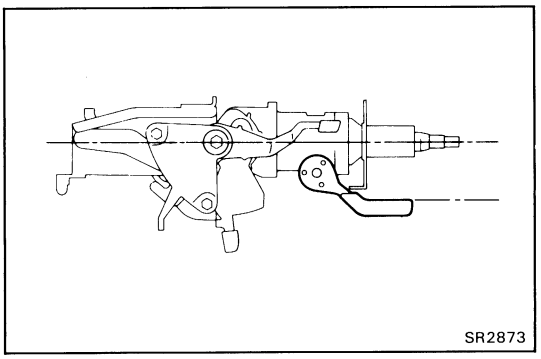

23. INSTALL TELESCOPIC LEVER

(a) Install the telescopic lever so it parallels the main shaft.

(b) Tighten the set nut.

Torque: 145 kg-cm (10 ft-lb, 14 N·m)

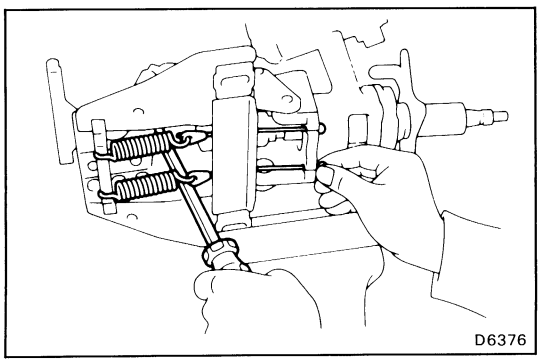

24. INSTALL TENSION SPRINGS AND CORDS

(a) Fully tilt the main shaft upward.

(b) Connect the spring and cord, and hook the spring to the hanger.

(c) Using a screwdriver, hook the cord end to the column upper bracket.

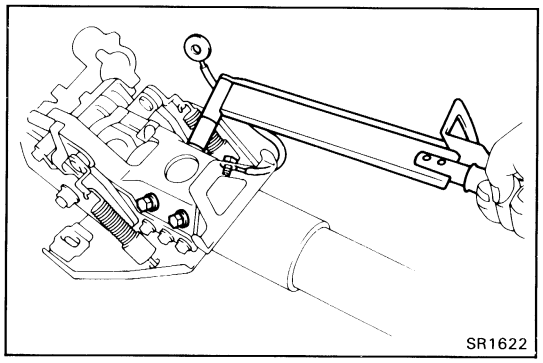

25. INSTALL COLUMN TUBE TO BREAKAWAY BRACKET

(a) Install the column tube to the breakaway bracket.

(b) Place the bond cable.

(c) Install and torque the four bolts.

Torque: 195 kg-cm (14 ft-lb, 19 N·m)

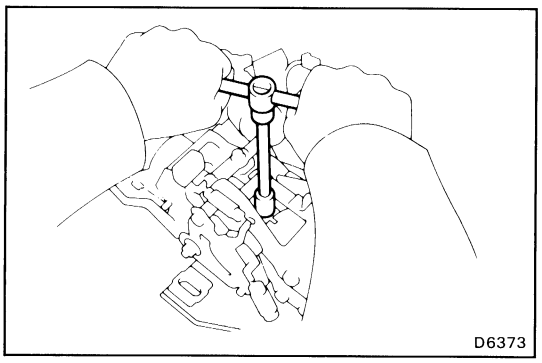

26. INSTALL INTERMEDIATE SHAFT TO COLUMN TUBE

(a) Coat the O-ring of the thrust stopper with MP grease.

(b) Install the intermediate shaft to the column tube.

(c) Connect the universal joint of main shaft and intermediate shaft.

Torque: 260 kg-cm (19 ft-lb, 25 N·m)

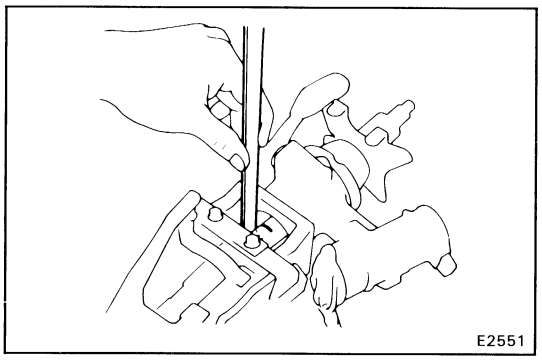

(d) Match the mark on the shaft accords with the upper bracket surface, as shown.

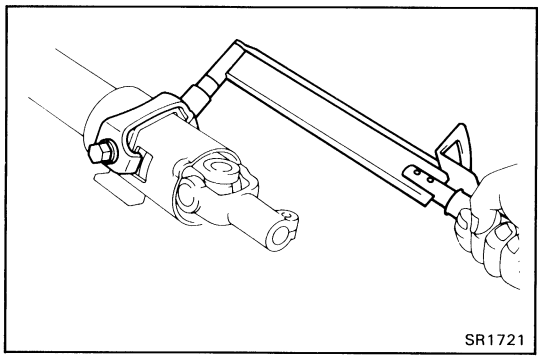

(e) Install the retainer bracket and two bolts.

(f) Torque the two bolts.

Torque: 280 kg-cm (20 ft-lb, 27 N·m)

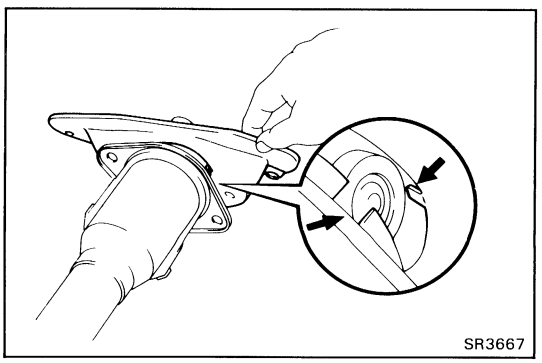

27. INSTALL COLUMN HOLE COVER

(a) Install a new O-ring and cover plate to the column tube.

(b) Align the cutout portion of the column tube to the protrusion of the hole cover, and install with the two bolts.

Torque: 130 kg-cm (9 ft-lb, 13 N·m)

28. INSTALL IGNITION KEY LIGHT WITH SCREW

POWER STEERING

Description

PRINCIPLES OF POWER STEERING

Power steering is one type of hydraulic device for utilizing engine power to reduce steering effort. Consequently, the engine is used to drive a pump to develop fluid pressure, and this pressure acts on a piston within the power cylinder so that the piston assists the rack effort. The amount of this assistance depends on the extent of pressure acting on the piston. Therefore, if more steering force is required, the pressure must be raised. The variation in the fluid pressure is accomplished by a control valve which is linked to the intermediate shaft and the steering main shaft.

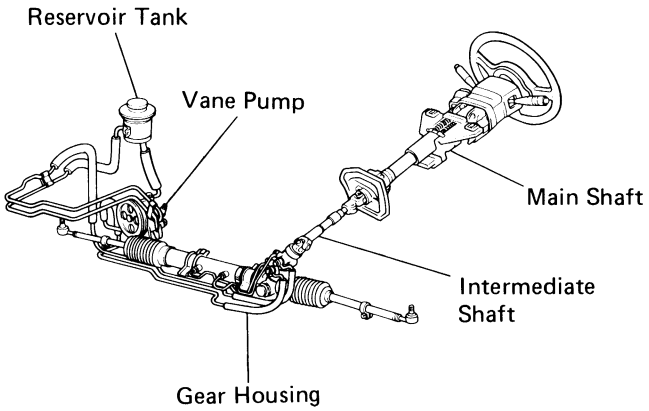

SR3116

NEUTRAL (STRAIGHT-AHEAD) POSITION

Fluid from the pump is sent to the control valve. If the control valve is in the neutral position, all the fluid will flow through the control valve into the relief port and back to the pump. At this time, hardly any pressure is created and because the pressure on the cylinder piston is equal on both sides, the piston will not move in either direction.

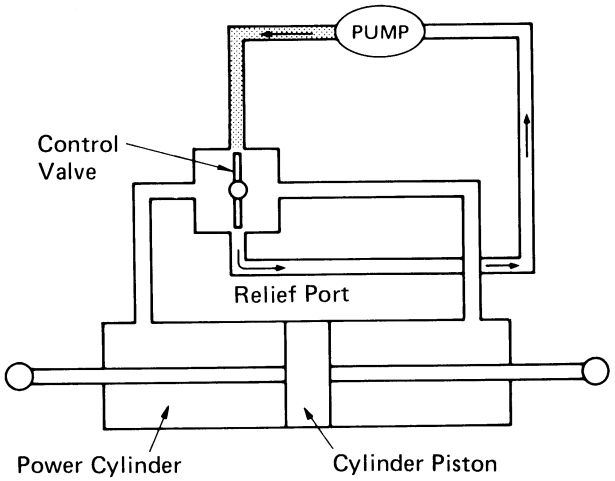

SR2390

WHEN TURNING

When the steering main shaft is turned in either direction, the control valve also moves, closing one of the fluid passages. The other passage then opens wider, causing a change in fluid flow volume and, at the same time, pressure is created. Consequently, a pressure difference occurs between both sides of the piston and the piston moves in the direction of the lower pressure so that the fluid in the cylinder is forced back to the pump through the control valve.

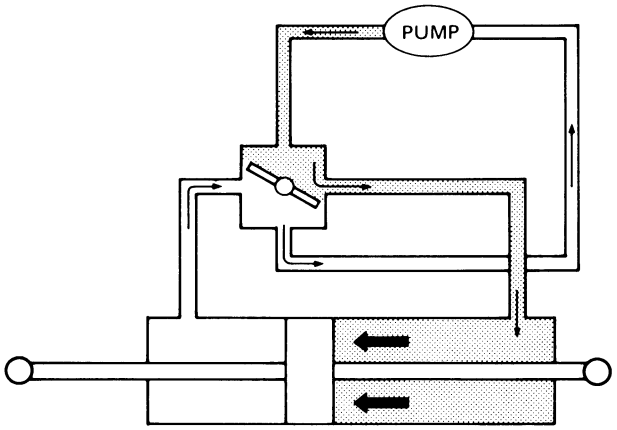

SR2391

SERVICE HINT

Troubles with the power steering system are usually concerned with hard steering due to the fact that there is no assist. In such cases, before attempting to make repairs, it is necessary to determine whether the trouble lies with the pump or with the gear housing. To do this, an on-vehicle inspection can be made by using a pressure gauge.

ON-VEHICLE INSPECTION

Power steering is a hydraulic device and problems are normally due to insufficient fluid pressure acting on the piston. This could be caused by either the pump not producing the specified fluid pressure or the control valve in the gear housing not functioning properly so that the proper fluid pressure can not be obtained.

If the fault lies with the pump, the same symptoms will generally occur whether the steering wheel is turned fully to the right or left. On the other hand, if the fault lies with the control valve, there will generally be a difference between the amount of assist when the steering wheel is turned to the left and right, causing harder steering. However, if the piston seal of the power cylinder is worn, there will be a loss of fluid pressure whether the steering wheel is turned to the right or left and the symptoms will be the same for both.

Before performing an on-vehicle inspection, a check must first be made to confirm that the power steering system is completely free of any air. If there is any air in the system, the volume of this air will change when the fluid pressure is raised, causing a fluctuation in the fluid pressure so that the power steering will not function properly. To determine if there is any air in the system, check to see if there is a change of fluid level in the reservoir tank when the steering wheel is turned fully to the right or left.

For example, if there is air in the system, it will be compressed to a smaller volume when the steering wheel is turned, causing a considerable drop in the fluid level. If the system is free of air, there will be very little change in the level even when the fluid pressure is raised. This is because the fluid, being a liquid, does not change volume when compressed. The little change in the fluid level is due to expansion of the hoses between the pump and gear housing when pressure rises.

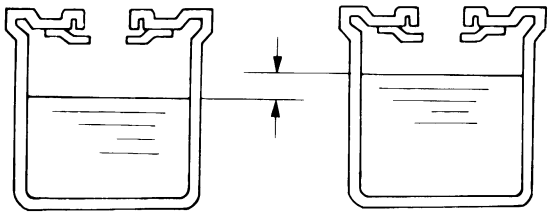

SR2392 SR2393

Also, air in the system will sometimes result in an abnormal noise occuring from the pump or gear housing when the steering wheel is fully turned in either direction.

This on-vehicle inspection must be performed every time to ensure that the power steering system is working properly after overhauling or repairing the pump or gear housing.

VANE PUMP

The main component parts of the vane pump, such as the cam ring, rotor, vane plates and flow control valve are high precision parts and must be handled carefully. Also, because this pump produces a very high fluid pressure, O-rings are used for sealing each part. When reassembling the pump, always use new O-rings.

In the flow control valve, there is a relief valve which controls the maximum pressure of the pump. The amount of this maximum pressure is very important; if it is too low, there will be insufficient power steering assist and if too high, it will have an adverse effect on the pressure hoses, oil seals, etc.. If the maximum pressure is either too high or too low due to a faulty relief valve, do not disassemble or adjust the relief valve, but replace the flow control valve as an assembly.

The clearance between the flow control valve and pump body installation hole is very important. After manufacture, the factory measures the size of the installation hole and outer circumference of the flow control valve, and punches a mark accordingly. Therefore, when replacing the flow control valve, be sure to do so with one having the same mark in order to insure the proper clearance.

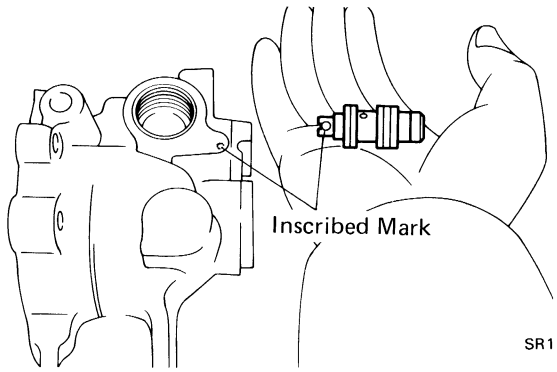

SR1510

The functional parts of the pump which produce fluid pressure are the cam ring, rotor and vane plates, and these should be checked for wear. If the clearance between each is not within standard when reassembling, any worn parts should be replaced.

In this case, the replaced cam ring and rotor should be of the same length (have the same mark), and the vane plates should be replaced with those having a length corresponding to that mark, otherwise the proper thrust clearance cannot be obtained. If there is too much thrust clearance, there will be insufficient fluid pressure at low speeds. If there is too little thrust clearance, it may result in seizure of the vane plates.

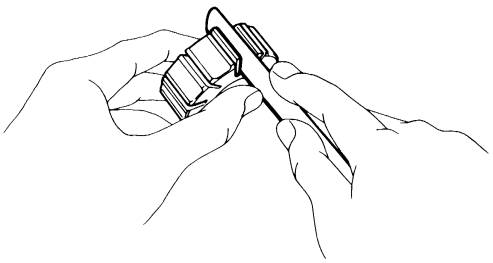

SR3191

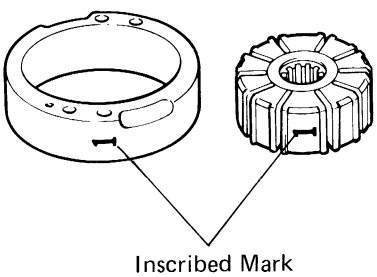

SR2673

GEAR HOUSING

If the gear housing is secured directly in a vise during overhaul, there is danger of deforming it, so always first secure it in the SST provided (rack and pinion steering rack housing stand) before placing it in the vise.

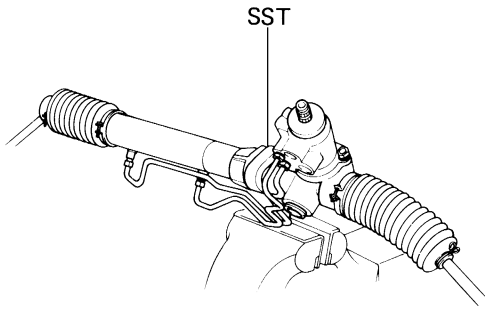

SR1580

The oil seals on both sides of the power cylinder are for the prevention of leakage of the high pressure fluid which acts on the piston. Always use new oil seals when reassembling and be very careful not to scratch or damage them.

Because of the high pressure, even the slightest scratch will cause fluid leakage, resulting in an inoperative power steering system.

Also, be very careful not to scratch the sliding portion of the rack which makes contact with the oil seals. When removing the rack ends from the rack, it is very easy to cause a burr when holding the tip of the rack with a wrench. Therefore, before assembling the rack, first check the tip for burrs and remove any with an oil stone.

Teflon rings are used for the piston and control valve. These teflon rings are highly durable against wear, but if it is necessary to replace them, be careful not to stretch the new ones. After installing a teflon ring into its groove, snug it down into the groove before assembly of the cylinder or housing to prevent possible damage.

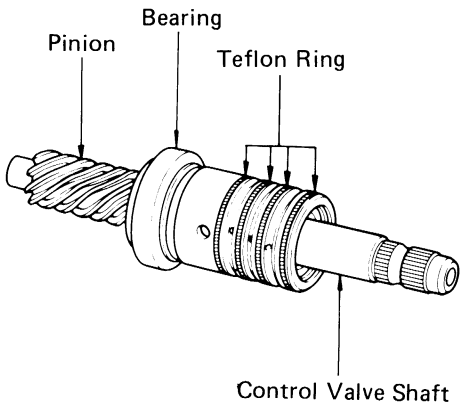

SR2400

As with the rack and pinion type steering, preload is very important. If the preload is not correct, it could result in such trouble as steering wheel play or shimmy or lack of durability, so always make sure that it is correct.

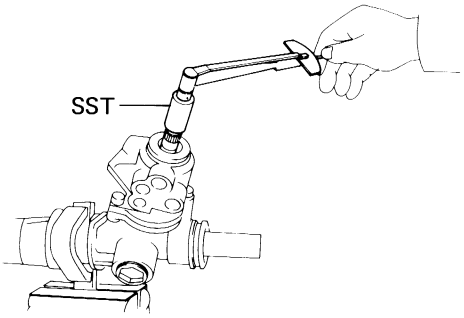

SR1605

PPS (Progressive Power Steering)

In addition to the power steering functions, the PPS controls hydraulic pressure acting on the hydraulic reaction chamber located in the control valve of the gear box to change steering characteristics according to the vehicle speed.

As a result, the wheels can be turned more lightly at low speeds or when steering during the vehicle stopped, while a responsive steering feeling is assured at medium to high speeds.

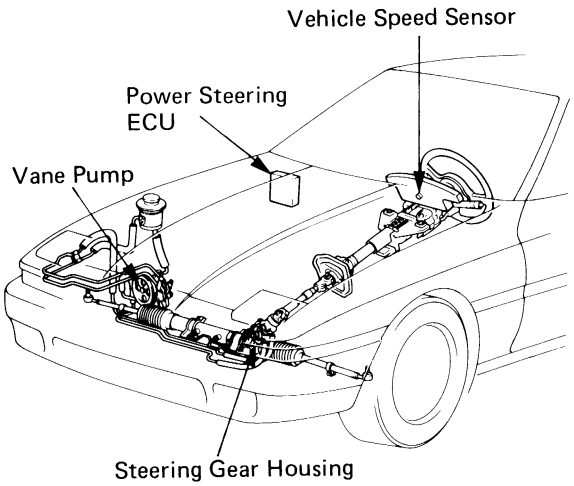

SR2894

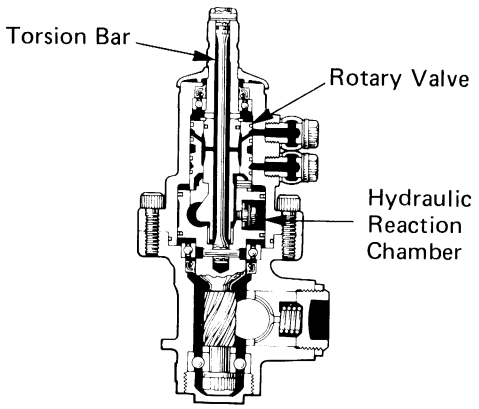

SR2895

IDLE-UP DEVICE

The pump produces the maximum fluid pressure when the steering wheel is turned fully to the right or left and, at this time, there is a maximum load on the pump which causes a decrease in engine idle rpm. To solve this problem, vehicles are equipped with an idle-up device which acts to raise the engine idle rpm whenever there is a heavy load on the pump.

On EFI engines, when the piston of the air control valve is pushed by fluid pressure, the air valve opens and the volume of air by-passing the throttle valve is increased to regulate engine rpm.

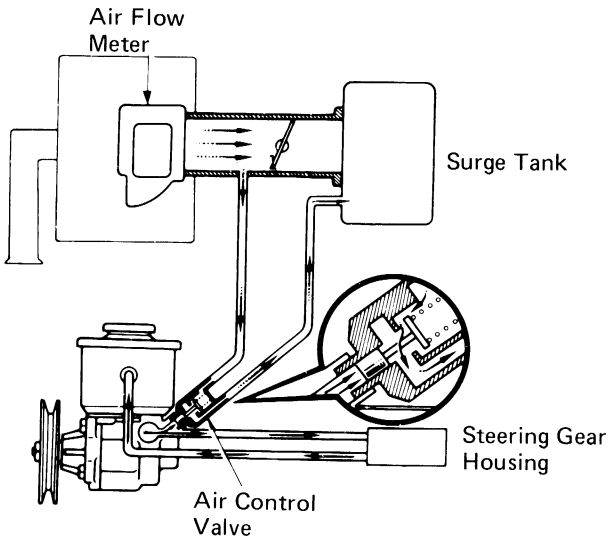

SR2402

The idle-up device functions to raise engine idle rpm when pump fluid pressure acts on the air control valve, installed to the pump body, to control the flow of air.

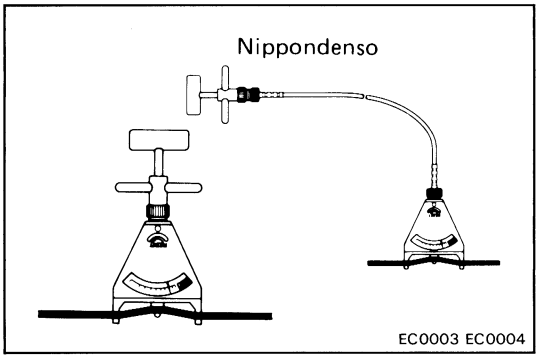

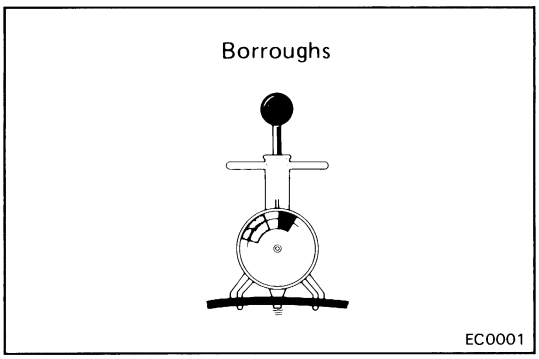

On-Vehicle Inspection

CHECK DRIVE BELT TENSION

Using a belt tension gauge, check the drive belt tension.

Belt tension gauge:

Nippondenso	**BTG-20 (95506-00020) or**
Borroughs	**No.BT-33-73F**

Drive belt tension:

New belt	**160 ± 20 lb**
Used belt	**100 ± 20 lb**

HINT:
- "New belt" refers to a belt which has been less than 5 minutes on a running engine.
- "Used belt" refers to a belt which has been used on a running engine for 5 minutes or more.
- After installing the drive belt, check that it fits properly in the ribbed grooves.

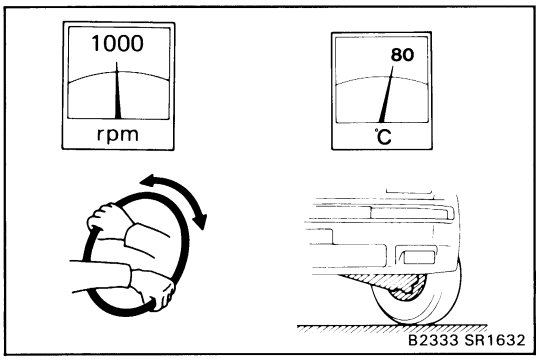

FLUID LEVEL CHECK

1. KEEP VEHICLE LEVEL

2. BOOST FLUID TEMPERATURE

With the engine idling at 1,000 rpm or less, turn the steering wheel from lock to lock several times to boost fluid temperature.

Fluid temperature: 80°C (176°F)

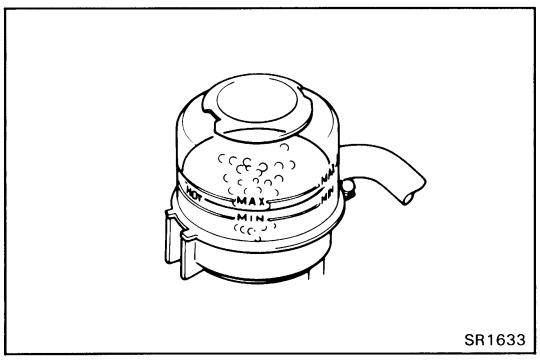

3. CHECK FOR FOAMING OR EMULSIFICATION

HINT: Foaming and emulsification indicate either the existence of air in the system or that the fluid level is too low.

4. CHECK FLUID LEVEL IN RESERVOIR

Check the fluid level and add fluid if necessary.

Fluid: ATF DEXRON® II

HINT: Check that the fluid level is within the HOT LEVEL of the tank. If the fluid is cold, check that it is within the COLD LEVEL of the tank.

CHECK IDLE-UP

1. WARM UP ENGINE

2. TURN AIR CONDITIONER SWITCH OFF

3. CHECK IDLE-UP

(a) Fully turn the steering wheel.

(b) Check that the engine rpm decreases when the air control valve hose is pinched.

(c) Check that the engine rpm increases when the air control valve hose is released.

REPLACEMENT OF POWER STEERING FLUID

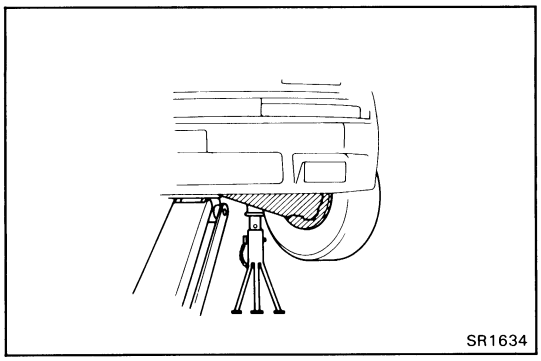

1. **JACK UP FRONT OF VEHICLE AND SUPPORT IT WITH STANDS**

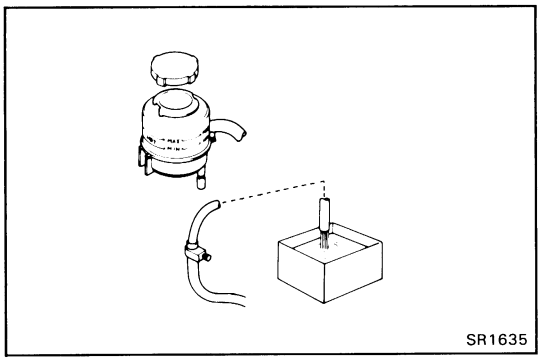

2. **REMOVE FLUID RETURN HOSE FROM RESERVOIR TANK AND DRAIN FLUID INTO CONTAINER**

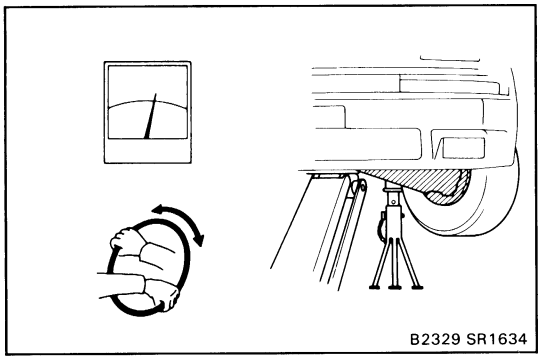

3. **WITH ENGINE IDLING, TURN STEERING WHEEL FROM LOCK TO LOCK WHILE DRAINING FLUID**
4. **STOP ENGINE**

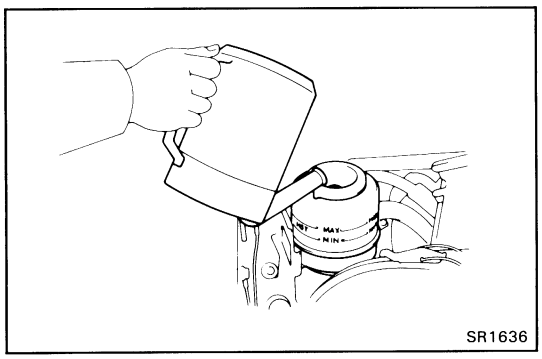

5. **FILL RESERVOIR TANK WITH FRESH FLUID**

   Fluid type: ATF DEXRON® II

6. **START ENGINE AND RUN IT AT 1,000 RPM**

   After 1 or 2 seconds, fluid will begin to discharge from the return hose. Stop the engine immediately at this time.

   NOTICE: Take care that some fluid remains left in the reservoir tank.

7. **REPEAT STEPS 5 AND 6 FOUR OR FIVE TIMES UNTIL THERE IS NO MORE AIR IN FLUID**
8. **CONNECT RETURN HOSE TO RESERVOIR TANK**
9. **BLEED POWER STEERING SYSTEM**

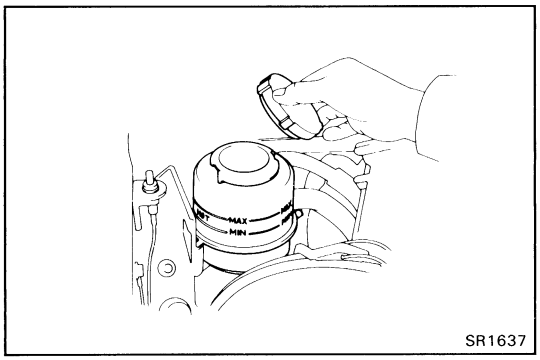

SR1637

BLEEDING OF POWER STEERING SYSTEM

1. CHECK FLUID LEVEL IN RESERVOIR TANK

Check the fluid level and add fluid if necessary.

Fluid: ATF DEXRON® II

HINT: Check that the fluid level is within the HOT LEVEL of the tank. If the fluid is cold, check that it is within the COLD LEVEL of the tank.

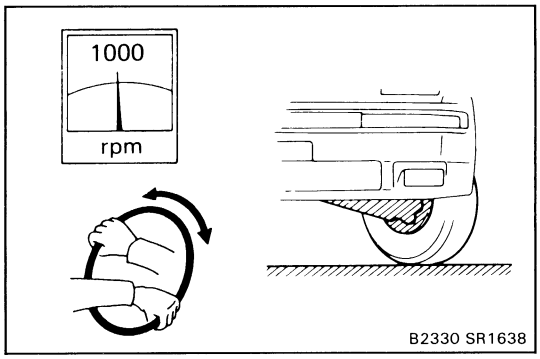

B2330 SR1638

2. START ENGINE AND TURN STEERING WHEEL FROM LOCK TO LOCK THREE OR FOUR TIMES

With the engine speed below 1,000 rpm, turn the steering wheel to left or right full lock and keep it there for 2 — 3 seconds, then turn the wheel to the reverse full lock and keep it there for 2 — 3 seconds.

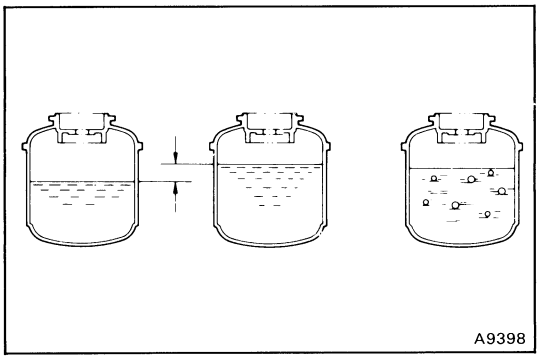
A9398

3. CHECK THAT FLUID IN RESERVOIR IS NOT FOAMY OR CLOUDY AND DOES NOT RISE OVER MAXIMUM WHEN ENGINE IS STOPPED

Measure the fluid level with the engine running. Stop the engine and measure the fluid level.

Maximum rise: 5 mm (0.20 in.)

If a problem is found, repeat steps 7 and 8. Repair the PS if the problem persists.

OIL PRESSURE CHECK

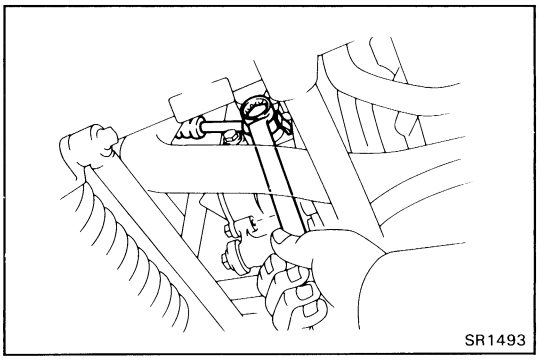

1. CONNECT PRESSURE GAUGE

(a) Disconnect the pressure line from the PS pump.

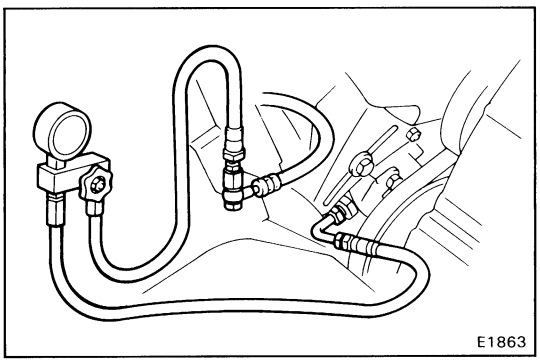

(b) Connect the gauge side of the pressure gauge to the PS pump and the valve side to the pressure line.

(c) Bleed the system. Start the engine and turn the steering wheel from lock to lock two or three times.

(d) Check that the fluid level is correct.

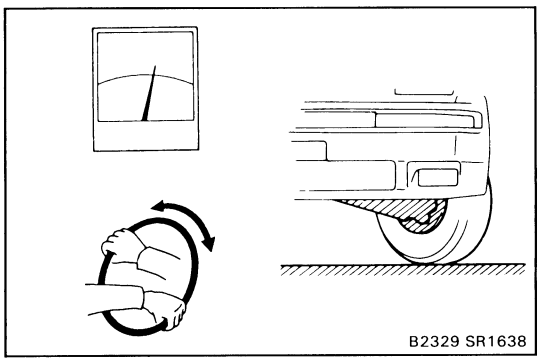

2. CHECK THAT FLUID TEMPERATURE IS AT LEAST 80°C (176°F)

3. START ENGINE AND RUN IT AT IDLE

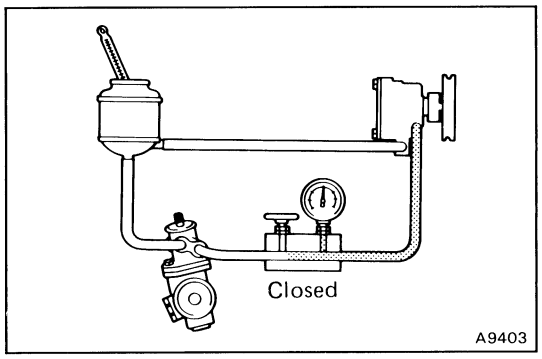

4. CHECK FLUID PRESSURE READING WITH VALVE CLOSED

Close the pressure gauge valve and observe the reading on the gauge.

Minimum pressure: 75 kg/cm² (1,067 psi, 7,355 kPa)

NOTICE:

- **Do not keep the valve closed for more than 10 seconds.**
- **Do not let the fluid temperature become too high.**

If pressure is low, repair or replace the PS pump.

5. OPEN VALVE FULLY

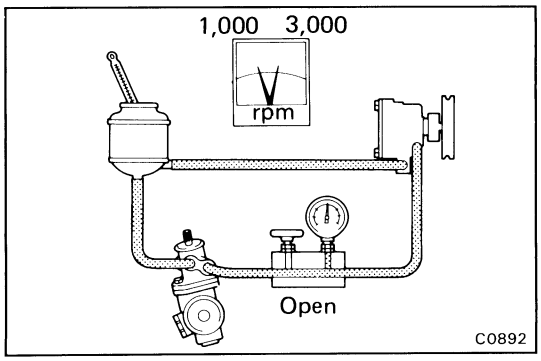

6. CHECK AND RECORD PRESSURE READING AT 1,000 RPM

7. CHECK AND RECORD PRESSURE READING AT 3,000 RPM

Check that there is 5 kg/cm² (71 psi, 490 kPa) or less difference in pressure between the 1,000 rpm and 3,000 rpm checks.

If the difference is excessive, repair or replace the flow control valve of the PS pump.

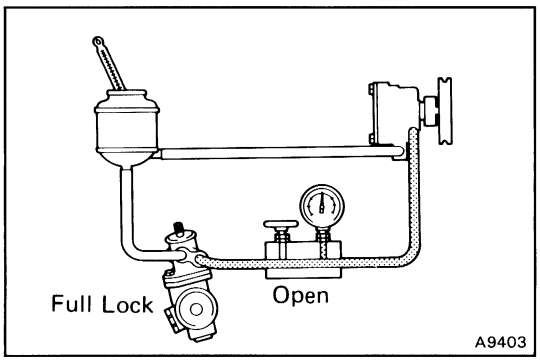

8. **CHECK PRESSURE READING WITH STEERING WHEEL TURNED TO FULL LOCK**

Be sure the pressure gauge valve is fully opened and the engine idling.

Minimum pressure: 75 kg/cm² (1,067 psi, 7,355 kPa)

NOTICE:
- **Do not maintain lock position for more than 10 seconds.**
- **Do not let the fluid temperature become too high.**

If pressure is low, the gear housing has an internal leak and must be repaired or replaced.

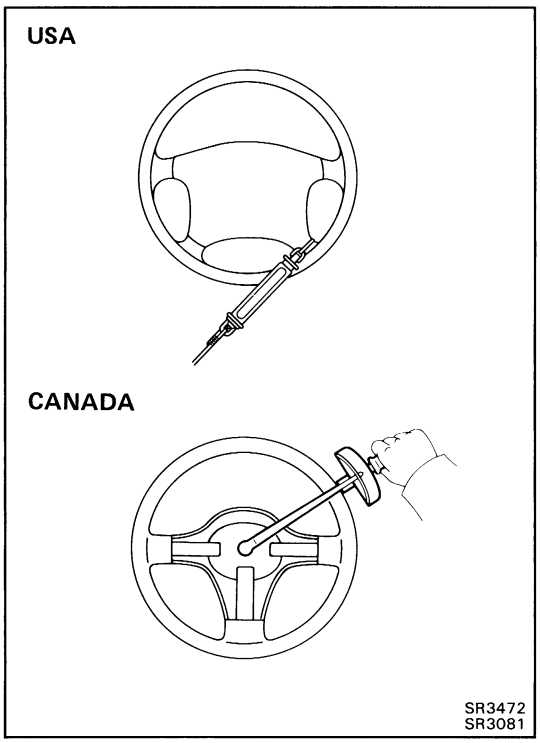

9. **MEASURE STEERING EFFORT**

(USA)

(a) Center the steering wheel and run the engine at idle.

(b) Using a spring balance, measure the steering effort in both directions.

Maximum steering effort:
w/o PPS 4.7 kg (10.36 lb, 46 N)
w/ PPS 2.7 kg (5.95 lb, 26 N)

If steering effort is excessive, repair the power steering unit.

HINT: Be sure to consider the tire type, pressure and contact surface before making your diagnosis.

(CANADA)

(a) Center the steering wheel and run the engine at idle.

(b) Using a torque meter, measure the steering effort in both directions.

Maximum steering effort:
w/o PPS 70 kg-cm (61 in.-lb, 6.9 N·m)
w/ PPS 40 kg-cm (34 in.-lb, 3.9 N·m)

If steering effort is excessive, repair the power steering unit.

HINT: Be sure to consider tire type, pressure and contact surface before making your diagnosis.

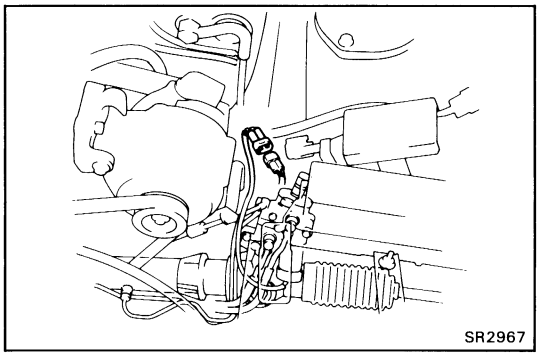

10. **(w/ PPS)**
MEASURE STEERING EFFORT

(a) Disconnect the solenoid connector.

(b) Using a spring balance or torque meter, measure the steering effort in both directions.

(Reference)
Maximum steering effort:
USA 5.7 kg (12.57 lb, 56 N)
CANADA 85 kg-cm (74 in.-lb, 8.3 N·m)

If steering effort is not heavier, check the solenoid.

HINT: Be sure to consider the tire type, pressure and contact surface before making your diagnosis.

Power Steering Pump

REMOVAL AND INSTALLATION OF POWER STEERING PUMP (7M-GE Engine)

Remove and install the parts as shown.

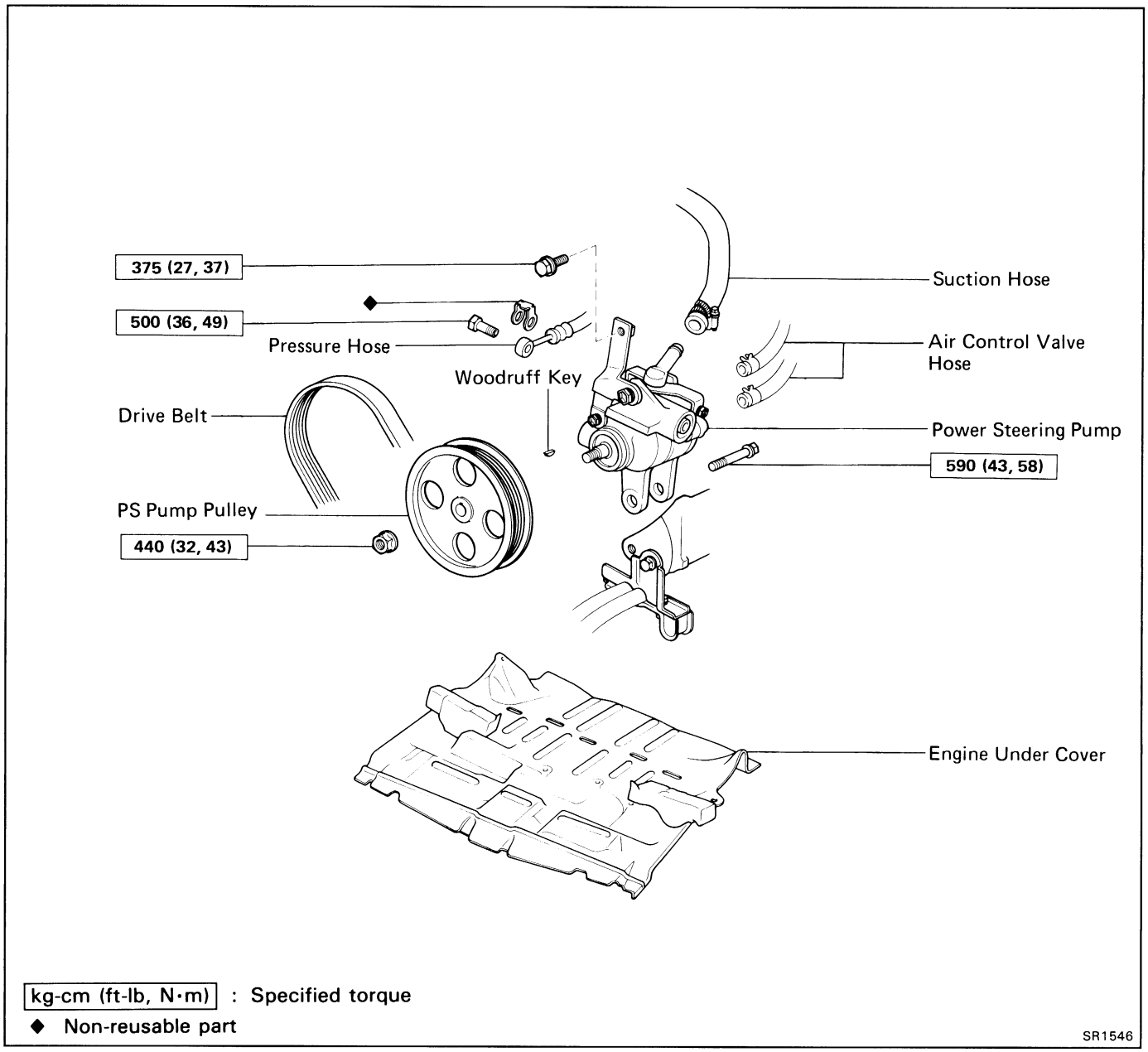

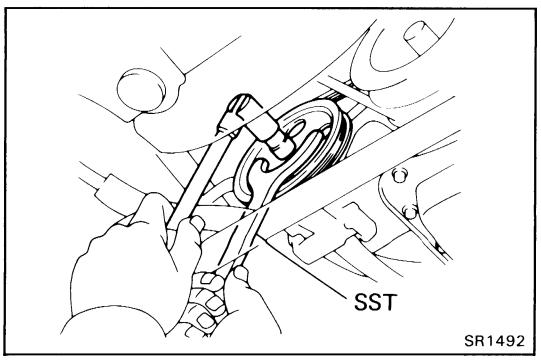

(MAIN POINTS OF REMOVAL AND INSTALLATION)

1. **REMOVE DRIVE BELT AND PULLEY**

   Using SST, to hold the pulley, loosen the pulley set nut.
   SST 09278-54012

2. **ADJUST DRIVE BELT TENSION AFTER INSTALLING PS PUMP**
   (See page SR-40)

3. **BLEED POWER STEERING SYSTEM**
   (See page SR-42)

REMOVAL AND INSTALLATION OF POWER STEERING PUMP (7M-GTE Engine)

Remove and install the parts as shown.

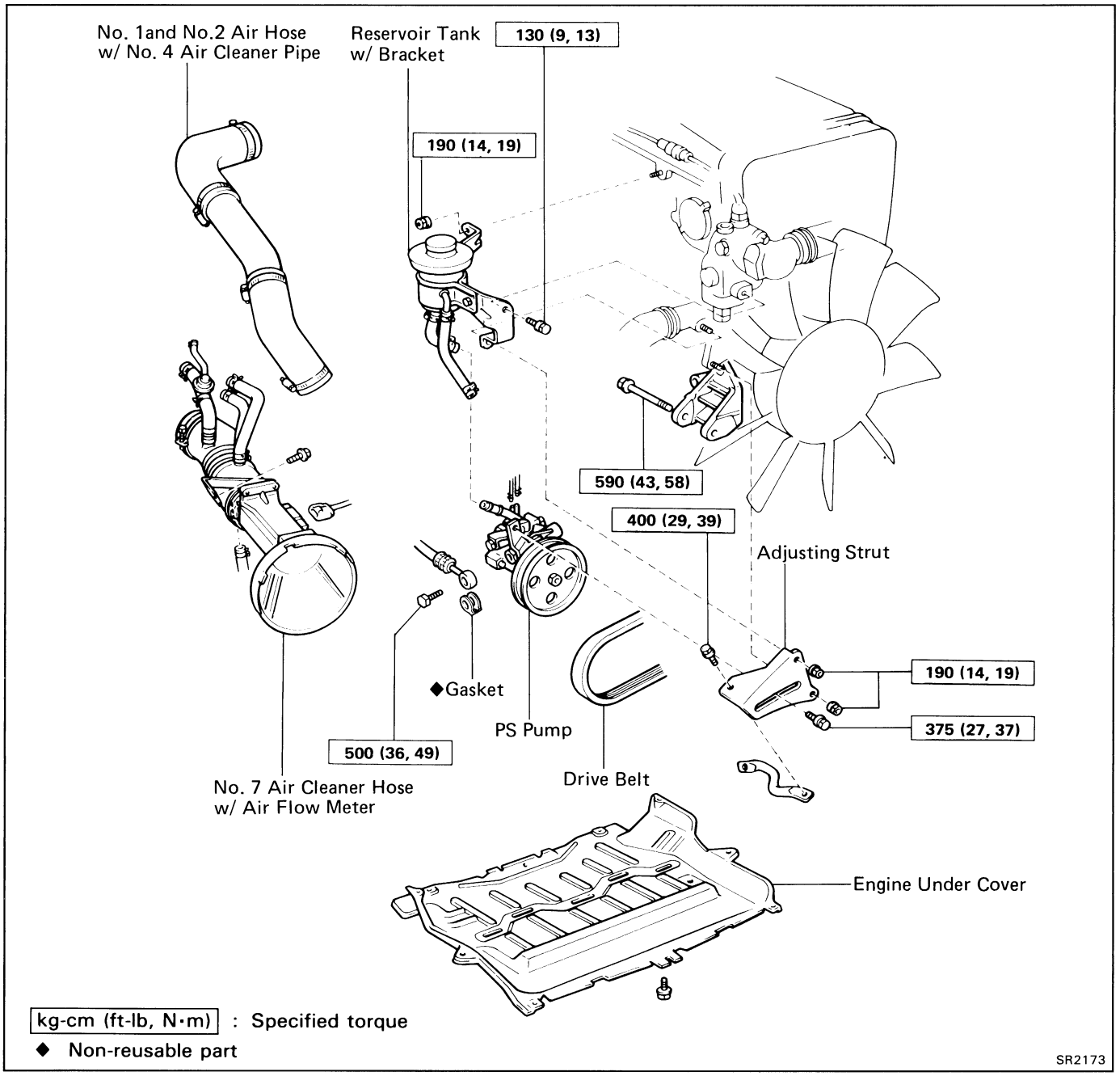

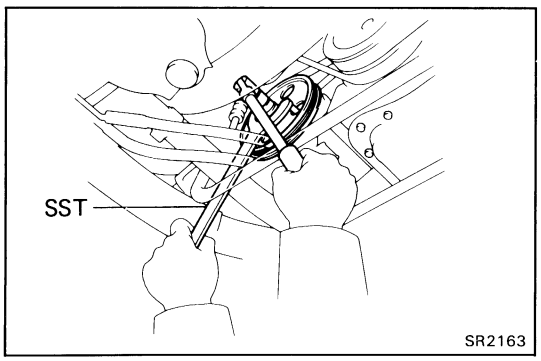

(MAIN POINTS OF REMOVAL AND INSTALLATION)

1. REMOVE POWER STEERING PUMP PULLEY

(a) Using SST, hold the pulley, and loosen the nut until it can be turn by hand.

SST 09278-54012

(b) Loosen the PS pump set bolt until it can be turn by hand.

(c) Remove the drive belt, pulley installation nut, pulley and woodruff key.

2. **ADJUST DRIVE BELT TENSION AFTER INSTALLING PS PUMP**
   (See page SR-40)

3. **BLEED POWER STEERING SYSTEM**
   (See page SR-42)

COMPONENTS

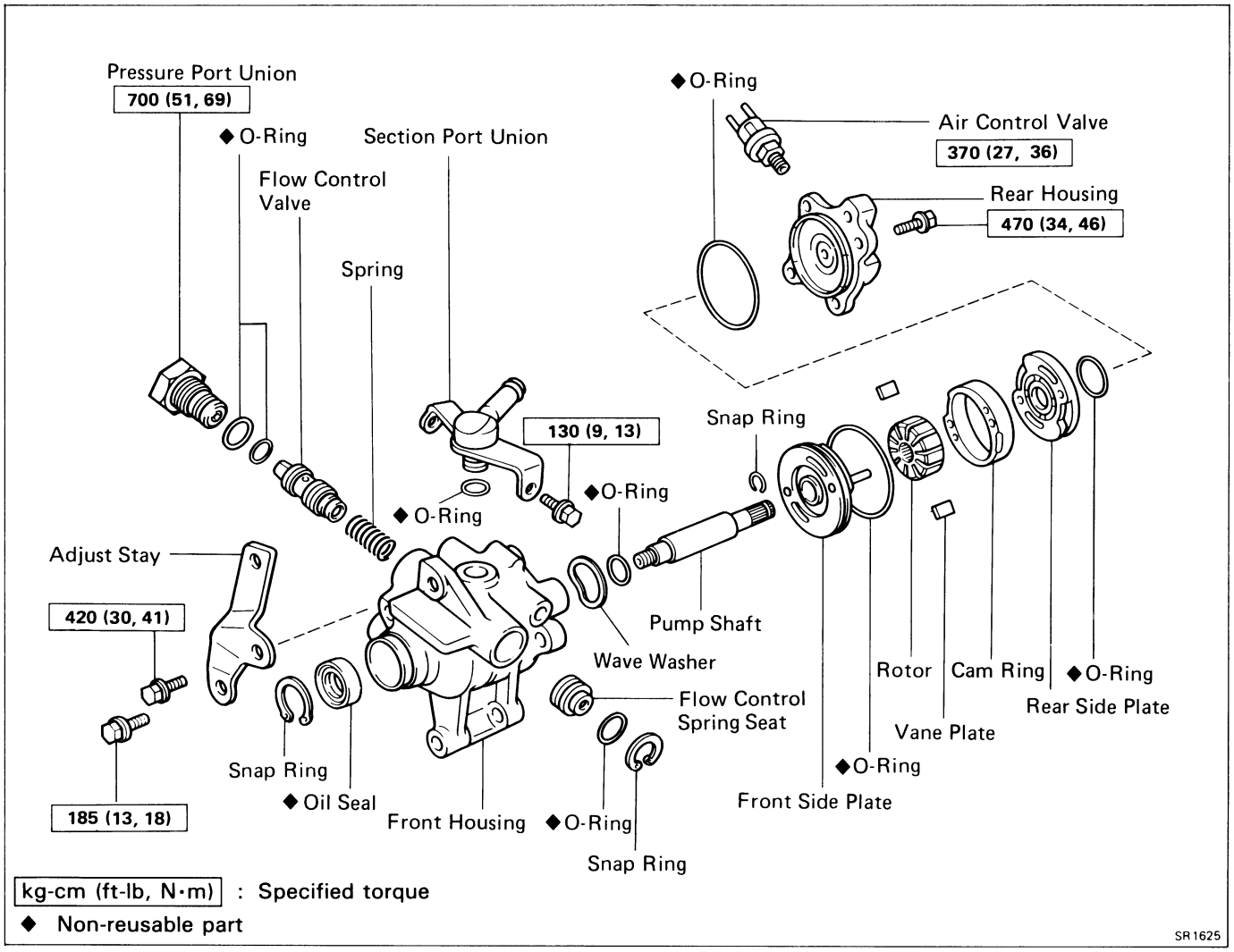

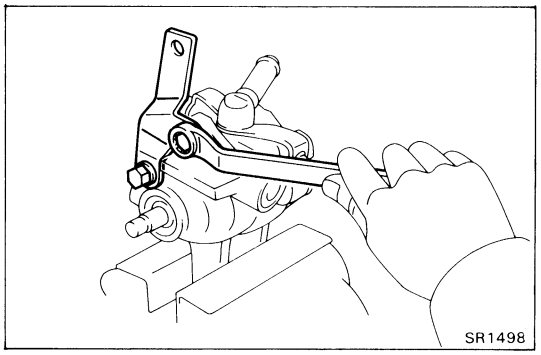

DISASSEMBLY OF POWER STEERING PUMP

1. **MOUNT PS PUMP IN VISE**
2. **REMOVE ADJUST STAY**
   Remove the two bolts and stay.
3. **REMOVE AIR CONTROL VALVE**

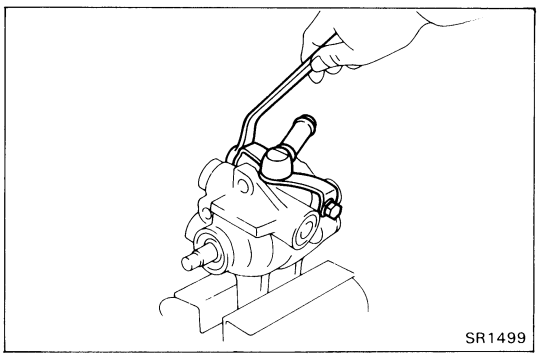

4. **REMOVE SUCTION PORT UNION**
   Remove the two bolts and pull out the union with a O-ring.

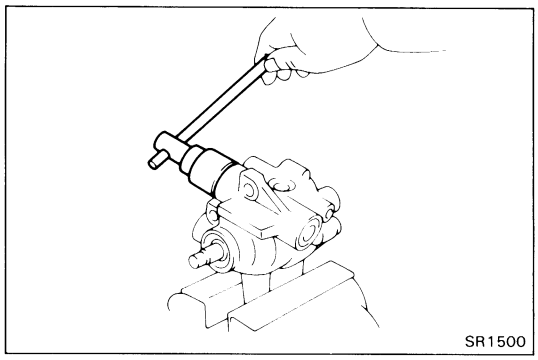

5. REMOVE FLOW CONTROL VALVE AND SPRING

Remove the pressure port union, and remove the valve and spring.

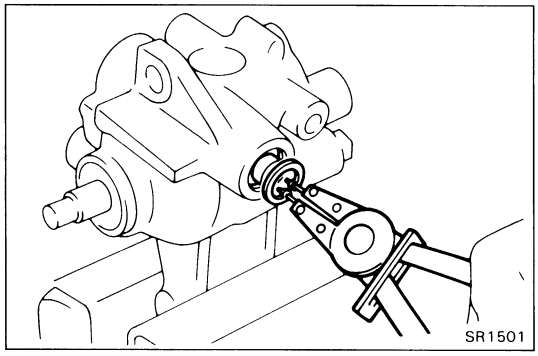

6. REMOVE FLOW CONTROL SPRING SEAT

(a) Using snap ring pliers, remove the snap ring.

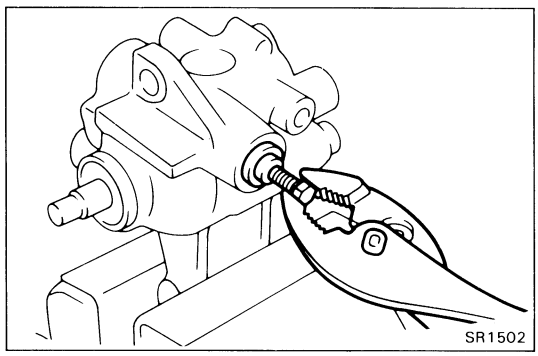

(b) Temporarily install a bolt and pull out the seat.

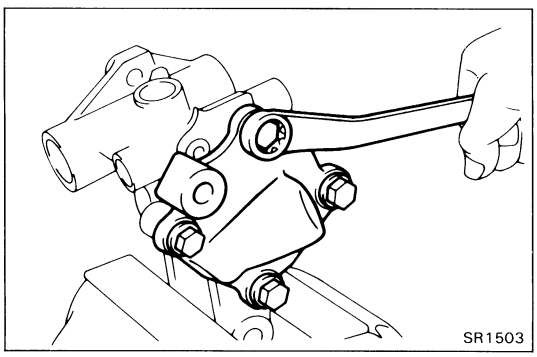

7. REMOVE REAR HOUSING

(a) Place matchmarks on the front and rear housings.

(b) Remove the four bolts and rear housing.

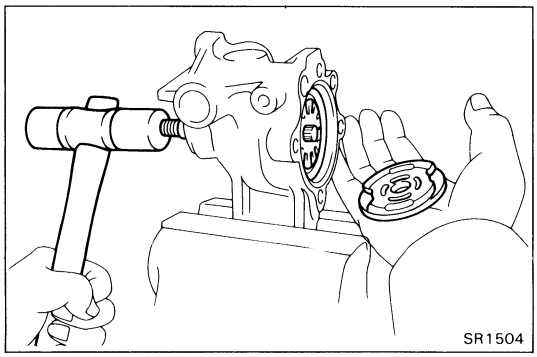

8. REMOVE REAR SIDE PLATE

(a) Using a plastic hammer, tap the rotor shaft.

(b) Remove the rear side plate.

(c) Remove the three O-rings.

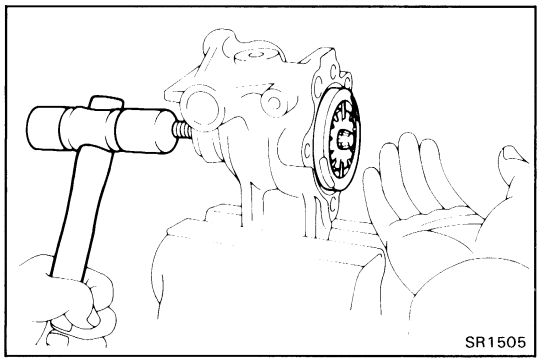

9. REMOVE ROTOR SHAFT WITH VANE PLATES, CAM RING AND ROTOR

(a) Using a plastic hammer, tap out the rotor shaft assembly.

NOTICE: Be careful not to scratch the parts.

(b) Remove the wave washer.

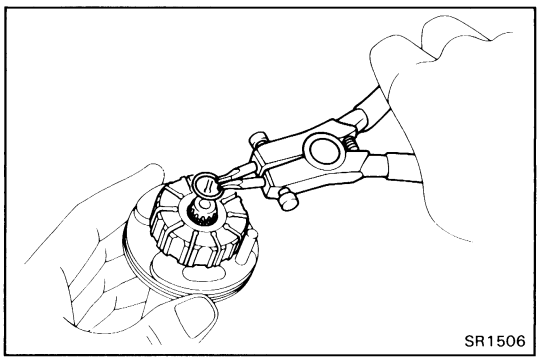

10. DISASSEMBLE ROTOR SHAFT ASSEMBLY

(a) Remove the cam ring and vane plates.

(b) Using snap ring pliers, remove the snap ring.

(c) Remove the rotor and plate from the rotor shaft.

NOTICE: Be careful not to scratch the rotor.

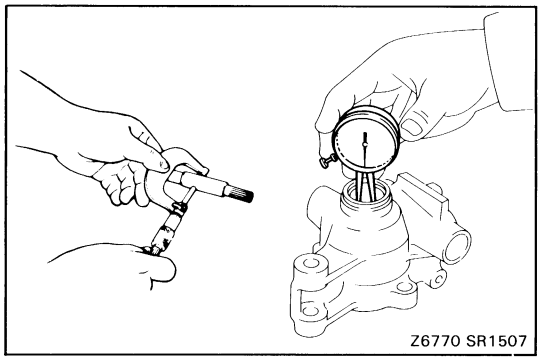

INSPECTION AND REPAIR OF POWER STEERING PUMP

1. INSPECT OIL CLEARANCE BETWEEN ROTOR SHAFT AND BUSHING

Using a micrometer and calipers, measure the oil clearance.

Standard clearance: 0.01 — 0.03 mm (0.0004 — 0.0012 in.)
Maximum clearance: 0.07 mm (0.0028 in.)

If the clearance is greater than maximum, replace the entire PS pump.

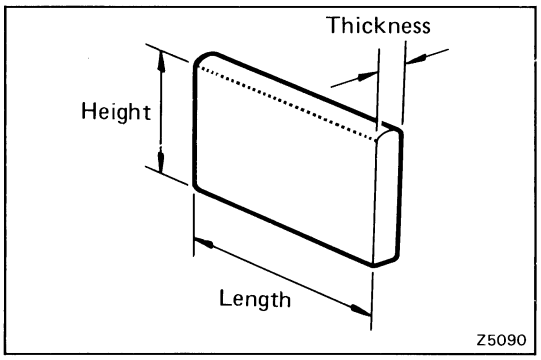

2. INSPECT ROTOR AND VANE PLATES

(a) Using a micrometer, measure the height, thickness and length of the vane plates.

Minimum height: 8.1 mm (0.319 in.)
Minimum thickness: 1.797 mm (0.0707 in.)
Minimum length: 14.988 mm (0.5901 in.)

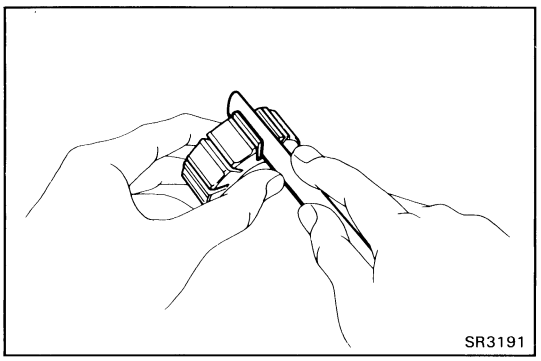

(b) Using a feeler gauge, measure the clearance between the rotor groove and vane plate.

Maximum clearance: 0.03 mm (0.0012 in.)

If the clearance is greater than maximum, replace the vane plate and/or rotor with one stamped with the same mark of the cam ring.

Inscribed mark: 1, 2, 3, 4 or None

HINT: There are five vane plate lengths with the following rotor and cam ring marks:

Rotor and cam ring mark	Vane plate length mm (in.)
None	14.996 – 14.998 (0.5904 – 0.5905)
1	14.994 – 14.996 (0.5903 – 0.5904)
2	14.992 – 14.994 (0.5902 – 0.5903)
3	14.990 – 14.992 (0.59016 – 0.59024)
4	14.988 – 14.990 (0.5901 – 0.5902)

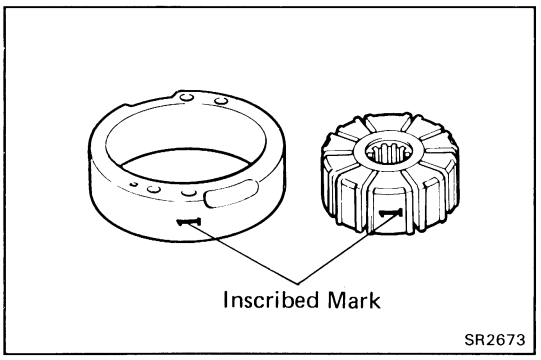

3. INSPECT FLOW CONTROL VALVE

(a) Coat fluid to the valve and check that it falls smoothly into the valve hole by its own weight.

(b) Check the flow control valve for leakage.
Close one of the holes and apply compressed air [4 — 5 kg/cm² (57 — 71 psi, 392 — 490 kPa)] into the opposite side, and confirm that air does not come out of the end hole.

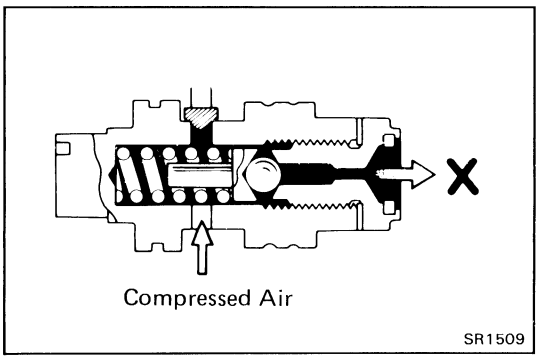

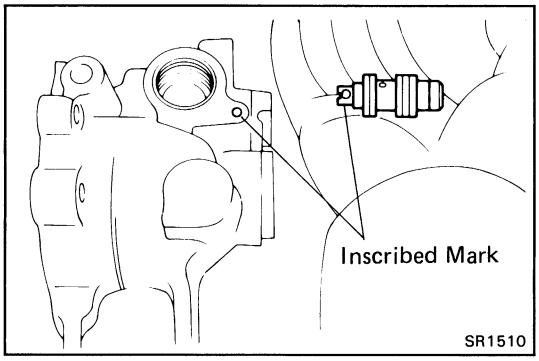

If necessary, replace the valve with one having the same letter as on the front housing.

Inscribed mark: A, B, C, D, E or F

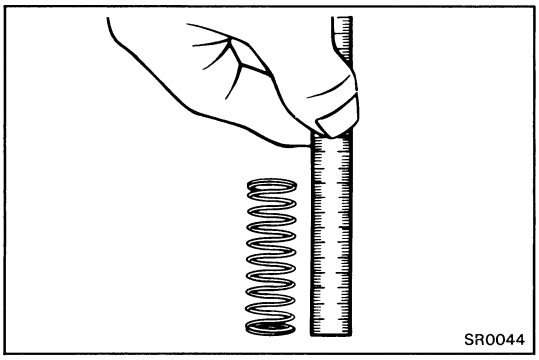

4. INSPECT FLOW CONTROL VALVE SPRING

Using a scale, measure the free length of the spring.

Free length: 37 — 39 mm (1.46 — 1.54 in.)

If the free length is not within specification, replace the spring.

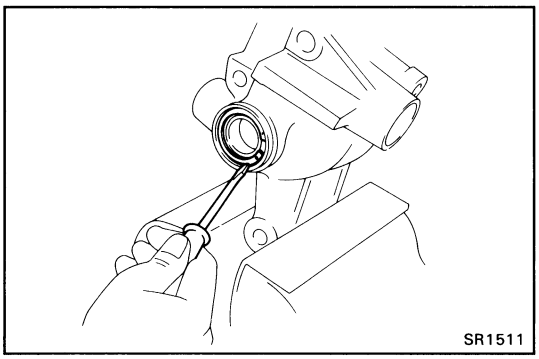

5. IF NECESSARY, REPLACE OIL SEAL

(a) Using a screwdriver, pry out the snap ring.

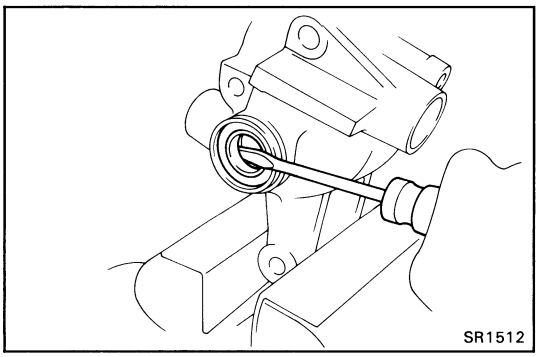

(b) Using a screwdriver, pry out the oil seal.

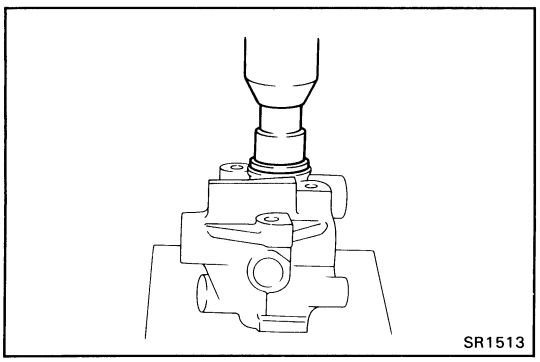

(c) Using a 22 mm socket wrench, press in a new oil seal.

(d) Coat the oil seal lip with MP grease.

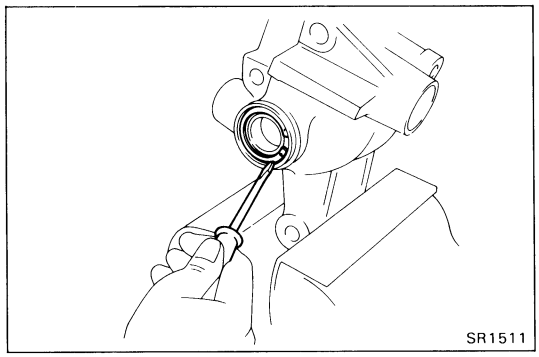

(e) Using a screwdriver, install the snap ring.

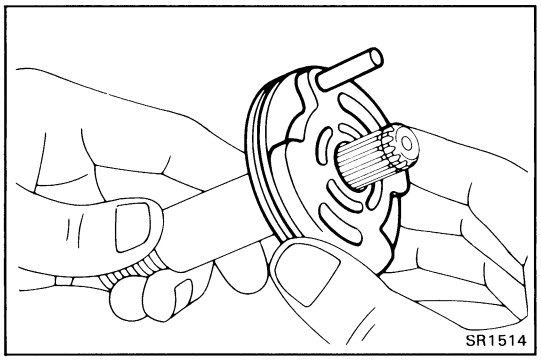

ASSEMBLY OF POWER STEERING PUMP

(See page SR-48)

HINT: Coat all sliding surfaces with fluid before assembling.

1. ASSEMBLE ROTOR, FRONT SIDE PLATE AND SHAFT

(a) Install the straight pin to the plate.

(b) Place the side plate on the shaft.

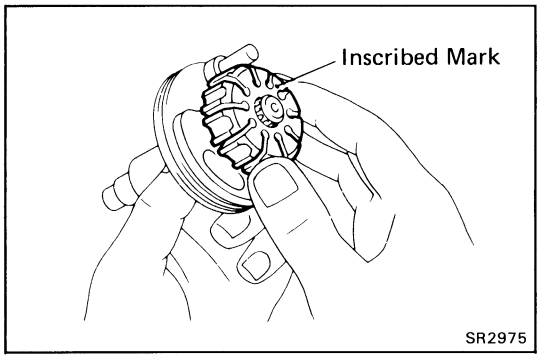

(c) Place the rotor on the shaft with the inscribed mark facing upward, and secure them with the snap ring.

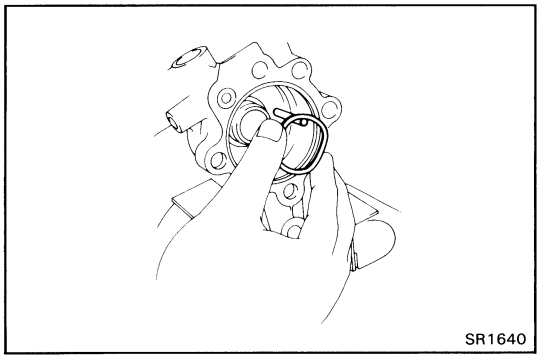

2. INSTALL ROTOR ASSEMBLY TO FRONT HOUSING

(a) Install a new O-ring in the groove of the front side plate.

(b) Install a new O-ring in the inside groove of the front housing.

(c) Apply MP grease to the oil seal.

(d) Install the wave washer and long straight pin in the front housing.

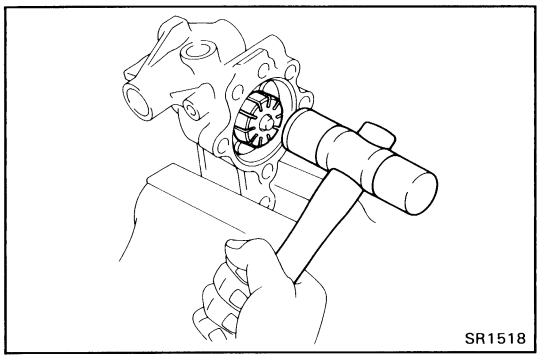

(e) Using a plastic hammer, tap in the rotor assembly.

NOTICE: Be careful not to damage the oil seal and O-rings.

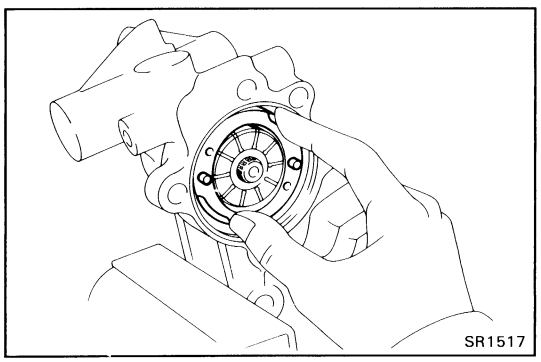

3. INSTALL CAM RING

Insert the cam ring, with the inscribed mark facing outward.

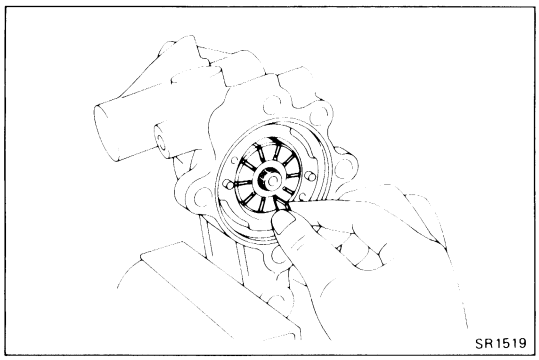

4. INSTALL VANE PLATES

Install the vane plates with the round end facing outward.

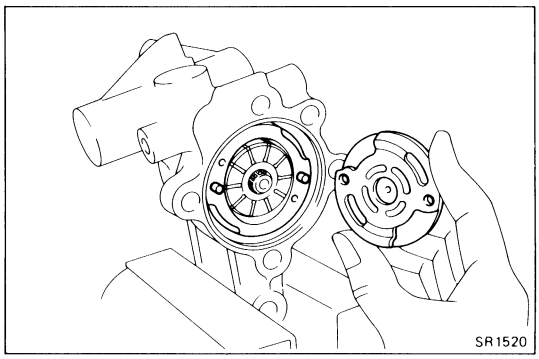

5. INSTALL REAR SIDE PLATE

(a) Install two new O-rings into the groove of the side plate.

(b) Align the holes of the side plate with the pins, and install the side plate.

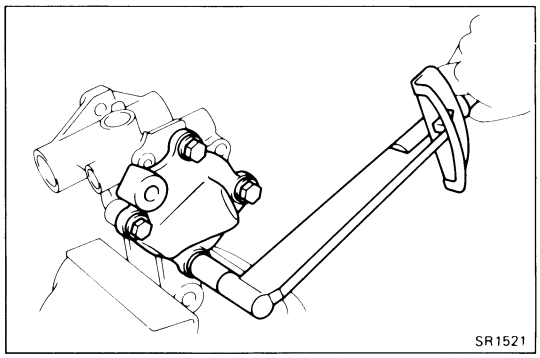

6. INSTALL REAR HOUSING

(a) Align the matchmarks on the housings and install a new O-ring and the rear housing with the four bolts.

(b) Torque the four bolts.

Torque: 470 kg-cm (34 ft-lb, 46 N·m)

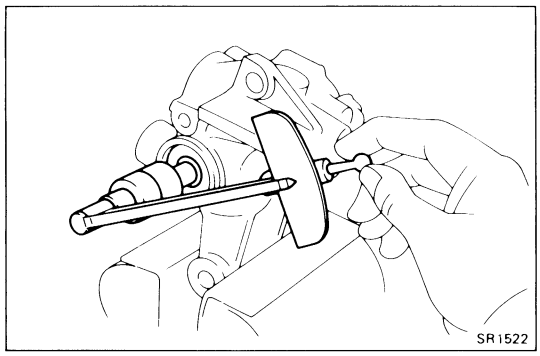

7. CHECK ROTOR SHAFT ROTATION CONDITION

(a) Check that the rotor shaft rotates smoothly without any abnormal noise.

(b) Temporarily install the pulley nut and check the rotating torque.

Rotating torque: 2.8 kg-cm (2.4 in.-lb, 0.3 N·m) or less

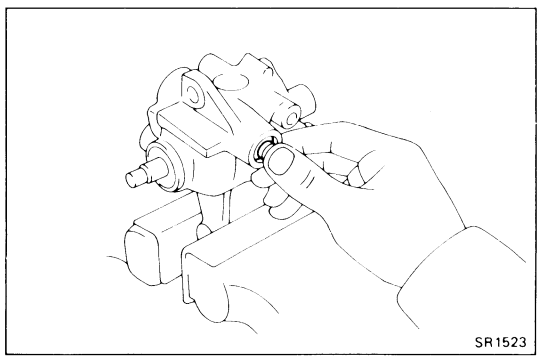

8. INSTALL FLOW CONTROL SPRING SEAT

(a) Install a new O-ring in the spring seat.

(b) Insert the spring seat and, using snap ring pliers, install the snap ring.

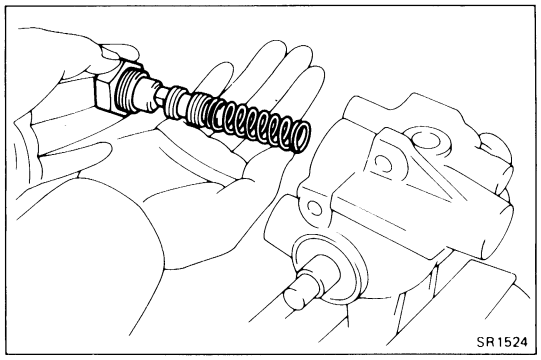

9. INSTALL FLOW CONTROL VALVE AND SPRING

Insert the spring and valve into the housing.

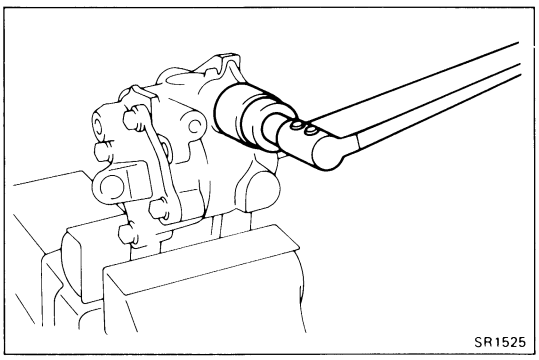

10. INSTALL PRESSURE PORT UNION

Install and torque the union.

Torque: 700 kg-cm (51 ft-lb, 69 N·m)

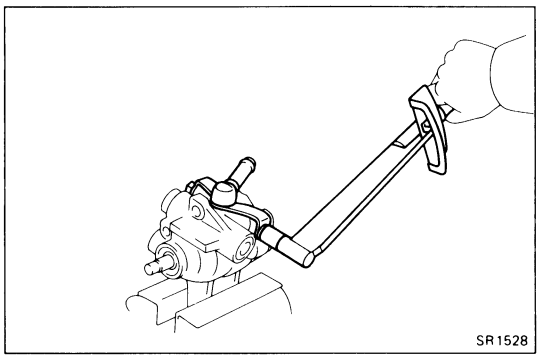

11. INSTALL SUCTION PORT UNION

(a) Install a new O-ring in the union.

(b) Push in the union, and install the two bolts.

(c) Torque the two bolts.

Torque: 130 kg-cm (9 ft-lb, 13 N·m)

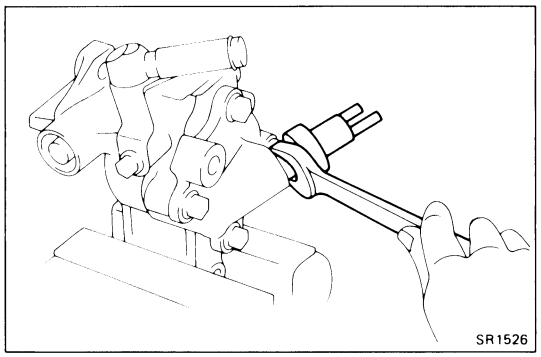

12. INSTALL AIR CONTROL VALVE

Torque: 370 kg-cm (27 ft-lb, 36 N·m)

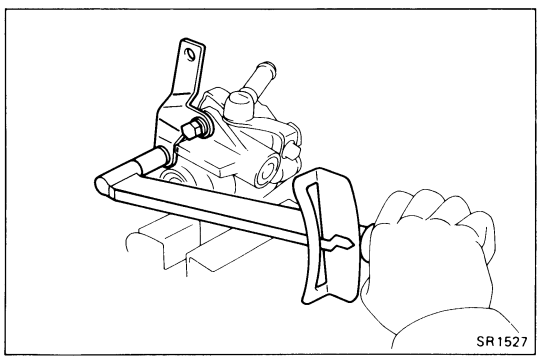

13. INSTALL DRIVE BELT ADJUST STAY

Install and torque the two bolts.

Torque: 12 mm bolt 185 kg-cm (13 ft-lb, 18 N·m)
14 mm bolt 420 kg-cm (30 ft-lb, 41 N·m)

Gear Housing

REMOVAL AND INSTALLATION OF STEERING GEAR HOUSING

Remove and install the parts as shown.

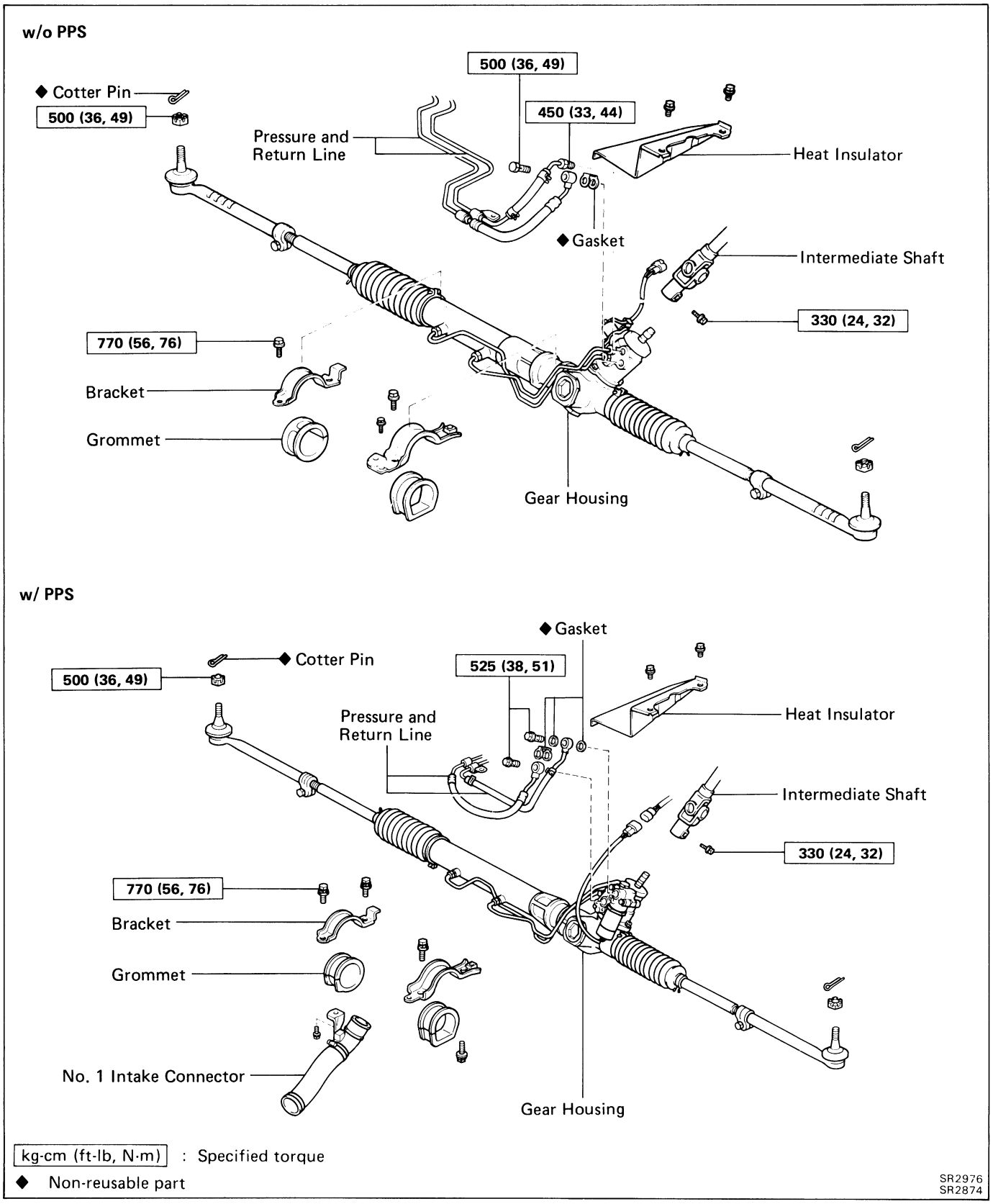

kg-cm (ft-lb, N·m) : Specified torque

◆ Non-reusable part

SR2976
SR2874

(MAIN POINTS OF REMOVAL AND INSTALLATION)

(USA)

NOTICE: When disconnecting the universal joint during removal of the gear housing, remove the steering wheel and perform centering of the spiral cable.
(See page AB-15)

If the operation is performed without removing the steering wheel, use the procedure below to make sure the steering wheel is firmly fixed in position and cannot turn.

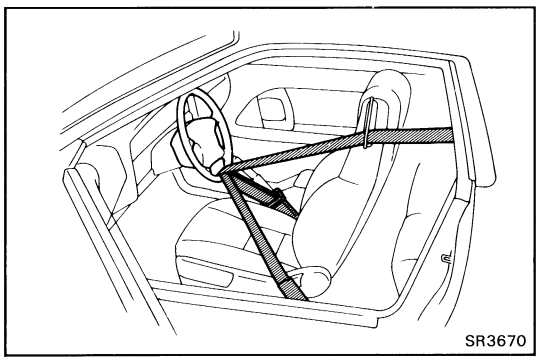

1. DISCONNECT UNIVERSAL JOINT

(a) Position the front wheels facing straight ahead.

(b) Using the seat belt of the driver's seat, fix the steering wheel so that it does not turn.

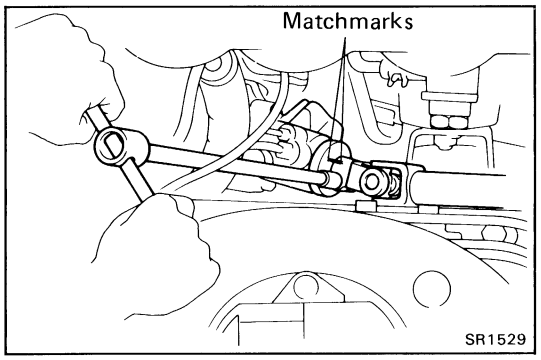

(c) Place matchmarks on the universal joint and control valve shaft.

(d) Remove the universal joint bolt of the control valve shaft side.

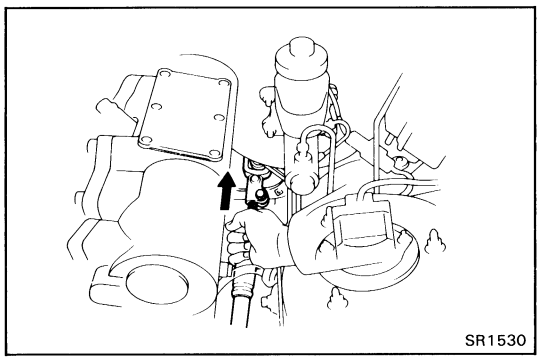

(e) Loosen the universal joint bolt of the main shaft side.

(f) Pull out the universal joint from the control valve shaft.

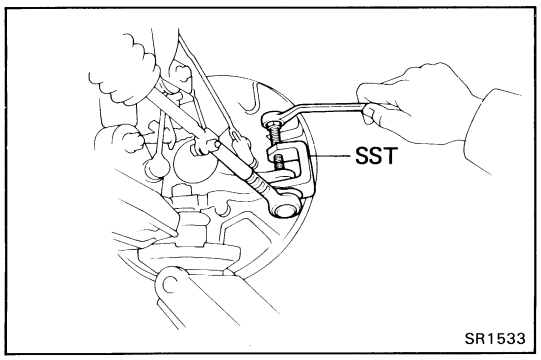

2. DISCONNECT TIE ROD ENDS

(a) Remove the two cotter pins and nuts.

(b) Jack up the lower arm and using SST, disconnect the two tie rod ends.

SST 09611-12010

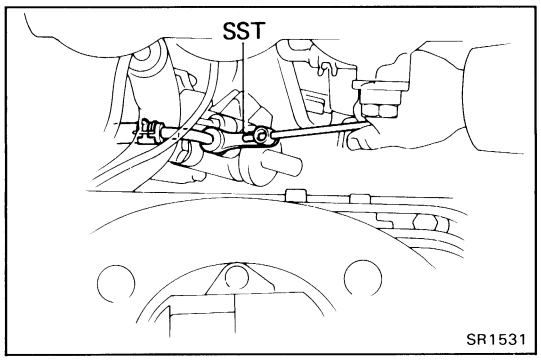

3. **(w/o PPS)**
DISCONNECT AND CONNECT RETURN LINE

Using SST, disconnect and connect the return line.

SST 09631-22020

Torque: 450 kg-cm (33 ft-lb, 44 N·m)

4. **CONNECT UNIVERSAL JOINT**

(a) Set the gear housing so that it matches the dimension shown below, with the gear housing at the center point.

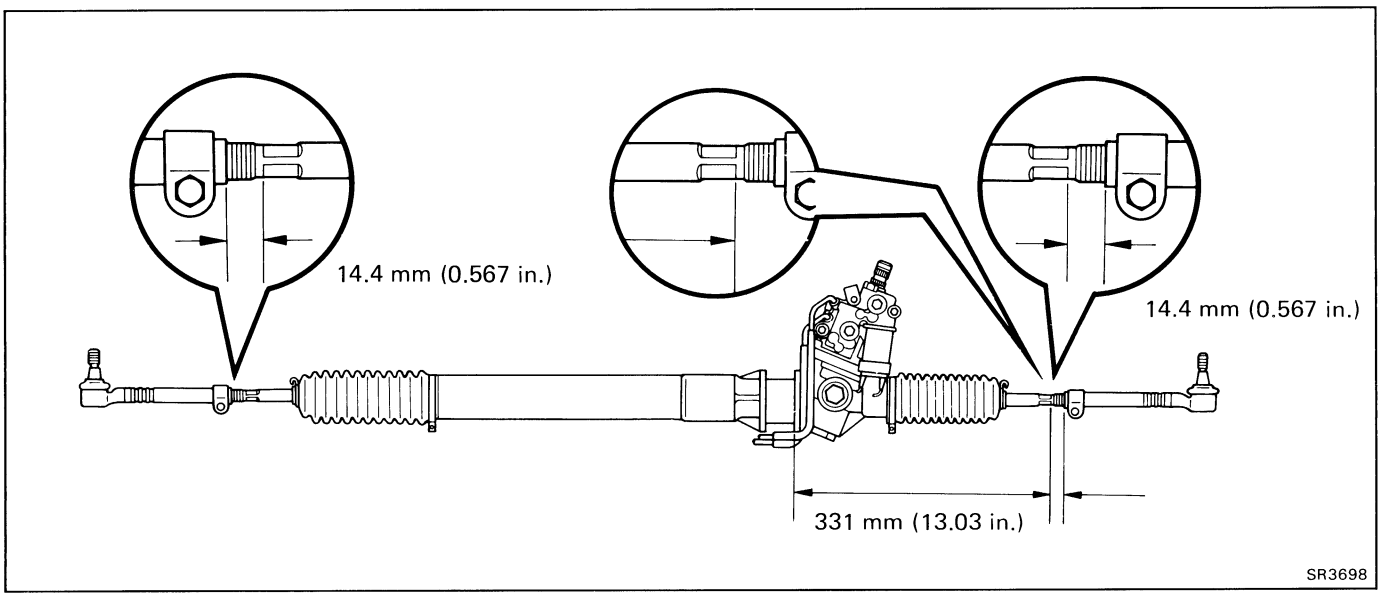

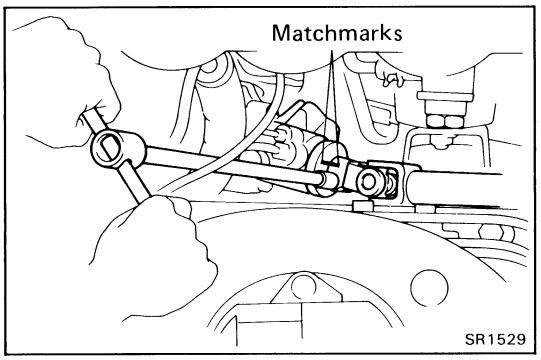

HINT: The dimension of the tie rod end is a reference value, so always adjust the toe-in before tightening the lock nut.

(b) Align matchmarks on the universal joint and control valve shaft and connect them.

5. **CENTER SPIRAL CABLE**

If the steering wheel has been removed, or the steering wheel may have moved during the operation, always perform centering of the spiral cable.
(See page AB-16)

6. **CHECK STEERING WHEEL CENTER POINT**

7. **CHECK TOE-IN**
(See page FA-6)

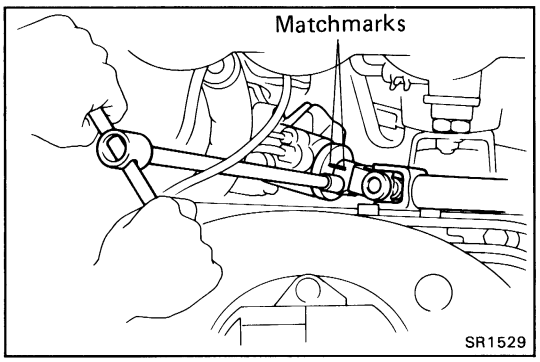

(CANADA)

1. DISCONNECT UNIVERSAL JOINT

(a) Place matchmarks on the universal joint and control valve shaft.

(b) Remove the universal joint bolt of the control valve shaft side.

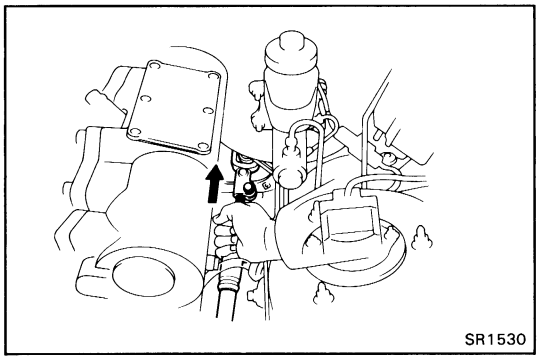

(c) Loosen the universal joint bolt of the main shaft side.

(d) Pull out the universal joint from the control valve shaft.

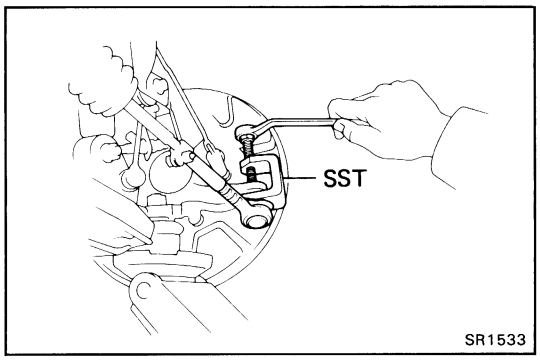

2. DISCONNECT TIE ROD ENDS

(a) Remove the two cotter pins and nuts.

(b) Jack up the lower arm and using SST, disconnect the two tie rod ends.

SST 09611-12010

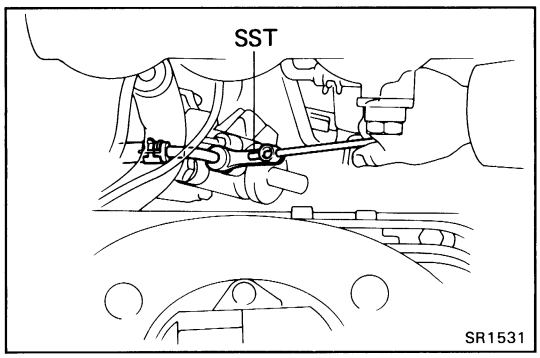

3. (w/o PPS)
DISCONNECT AND CONNECT RETURN LINE

Using SST, disconnect and connect the return line.

SST 09631-22020

Torque: 450 kg-cm (33 ft-lb, 44 N·m)

4. CHECK STEERING WHEEL CENTER POINT

5. CHECK TOE-IN
(See page FA-6)

COMPONENTS (w/o PPS)

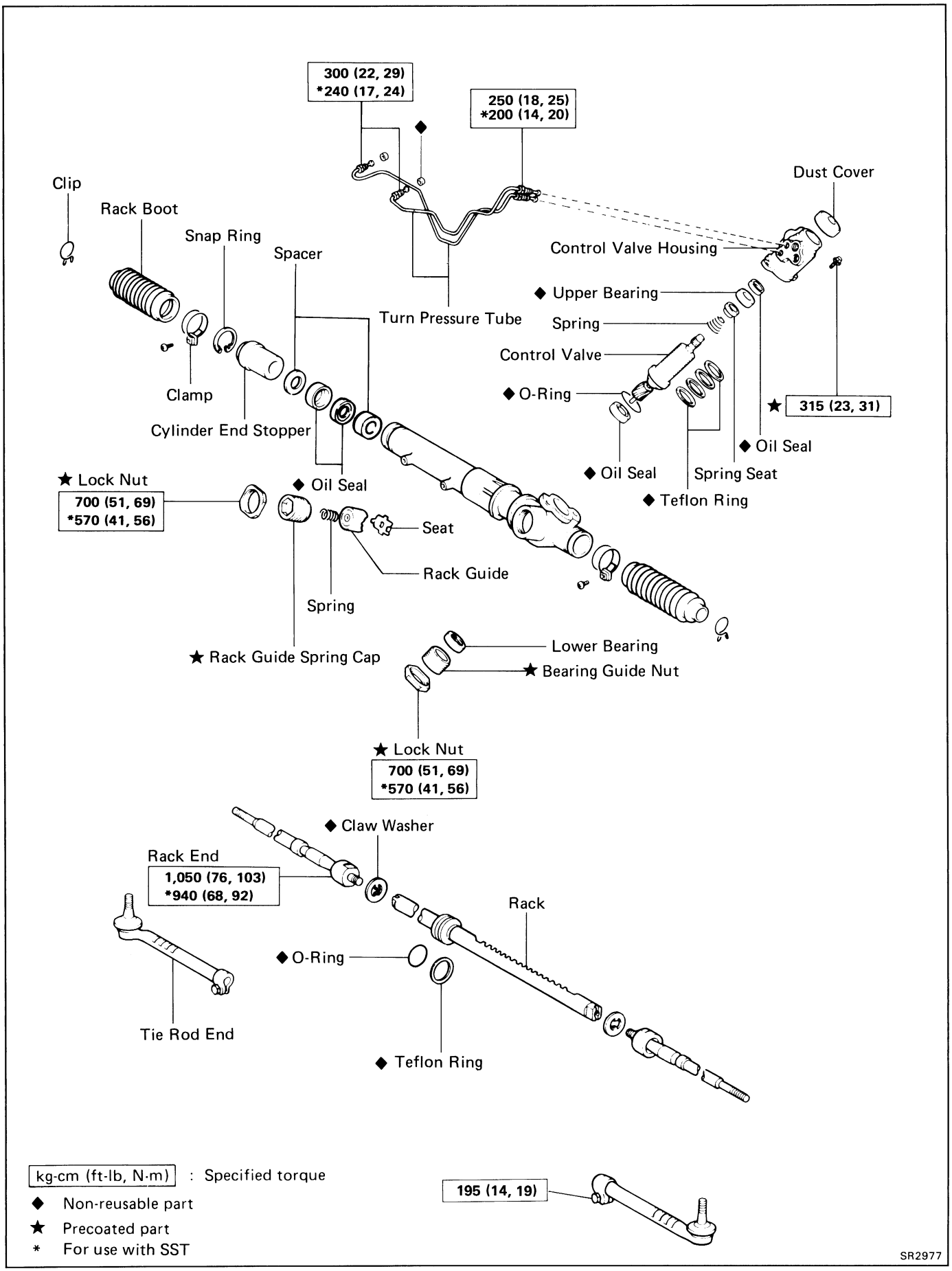

DISASSEMBLY OF STEERING GEAR HOUSING

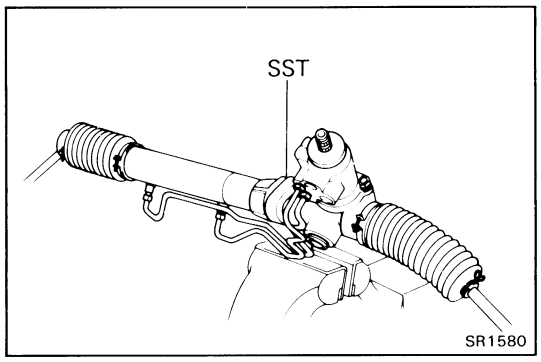

1. CLAMP GEAR HOUSING IN VISE

Using SST, secure the steering gear in a vise.

SST 09612-00012

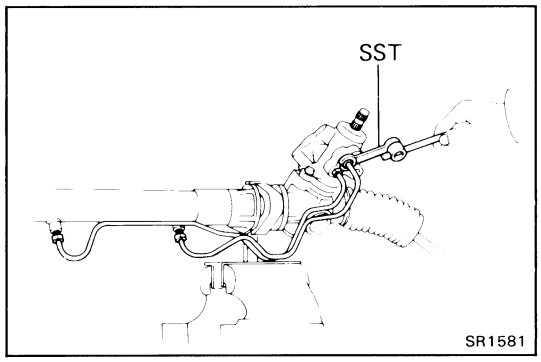

2. REMOVE RIGHT AND LEFT TURN PRESSURE TUBES

Using SST, remove the pressure tubes.

SST 09633-00020

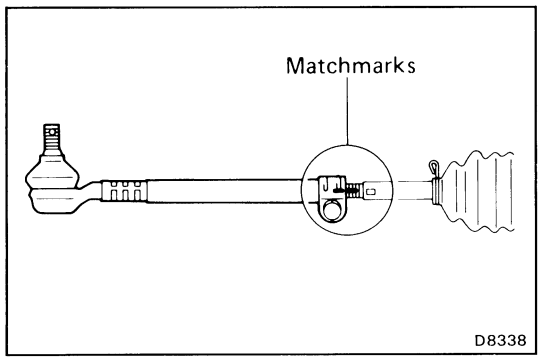

3. REMOVE TIE ROD ENDS

(a) Loosen the clamp lock nut and place matchmarks on the tie rod tube and rack end.

(b) Remove tie rod ends.

4. REMOVE RACK BOOTS

(a) Remove the clips and clamps.

(b) Remove the rack boots.

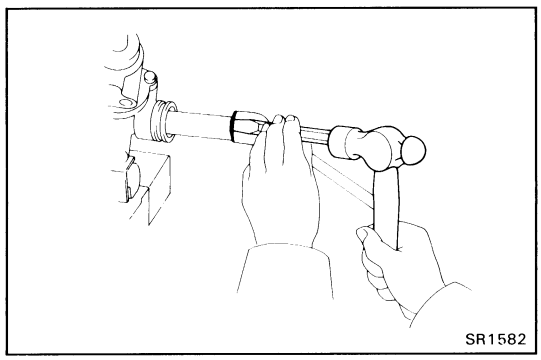

5. REMOVE RACK ENDS AND CLAW WASHERS

(a) Unstake the claw washers.

NOTICE: Avoid any impact to the rack.

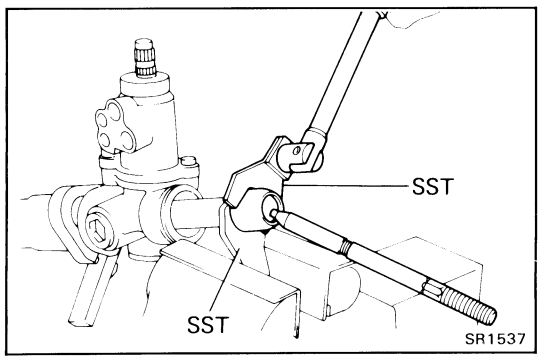

(b) Using SST, remove the rack ends.

SST 09612-24014 (09617-24011)
09617-14010

(c) Remove the claw washers.

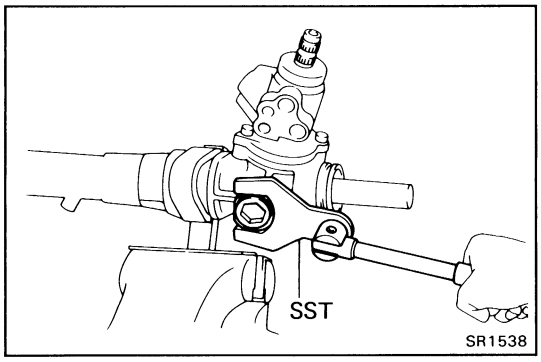

6. REMOVE RACK GUIDE SPRING CAP LOCK NUT

Using SST, remove the rack guide spring cap lock nut.
SST 09612-24014 (09617-24020)

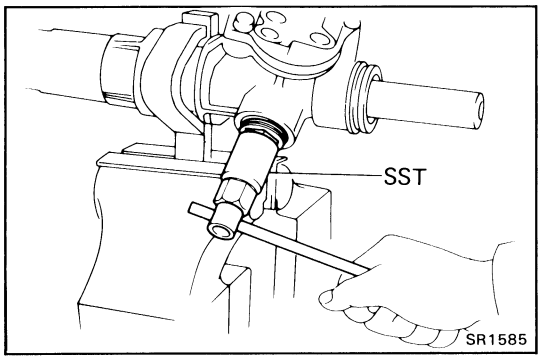

7. REMOVE RACK GUIDE SPRING CAP

Using SST, remove the rack guide spring cap.
SST 09612-24014 (09612-10022)

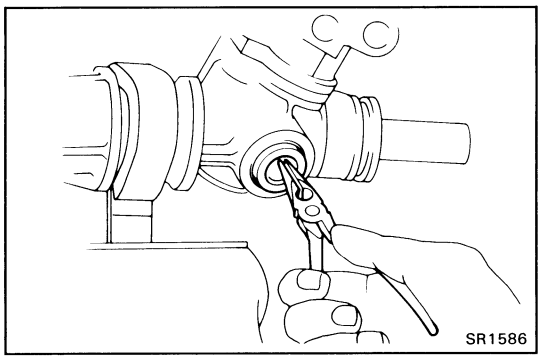

8. REMOVE RACK GUIDE SPRING, RACK GUIDE AND SEAT

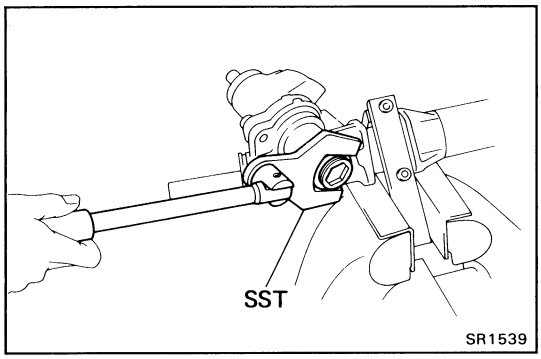

9. REMOVE BEARING GUIDE LOCK NUT

Using SST, remove the lock nut.
SST 09612-24014 (09617-24020)

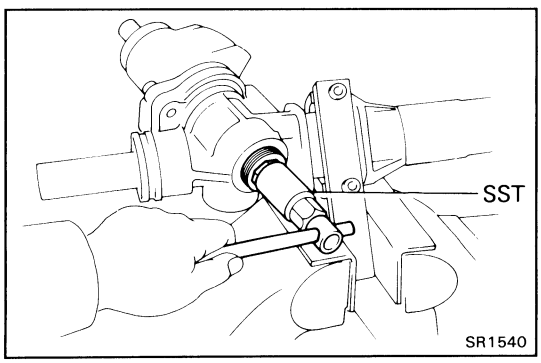

10. REMOVE BEARING GUIDE NUT

Using SST, remove the bearing guide nut.
SST 09612-24014 (09612-10022)

11. REMOVE DUST COVER

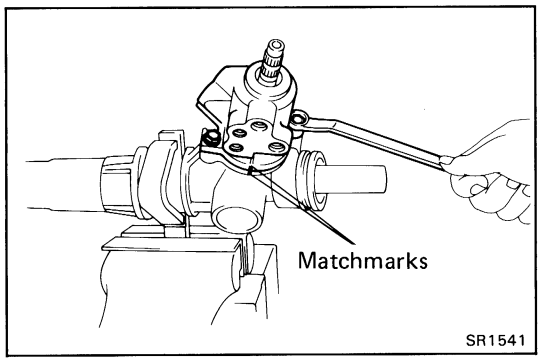

12. REMOVE CONTROL VALVE HOUSING

(a) Place matchmarks on the valve housing and rack housing.

(b) Remove the two bolts.

(c) Pull out the valve housing.

(d) Remove the O-ring from the rack housing.

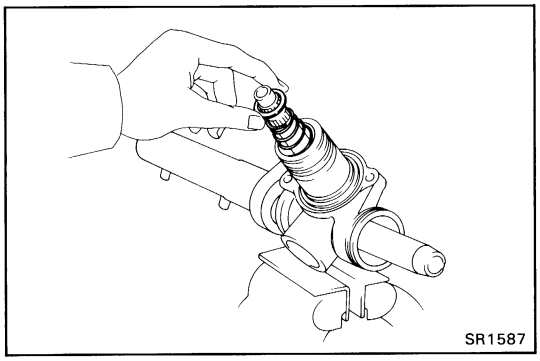

13. REMOVE CONTROL VALVE SPRING SEAT AND SPRING

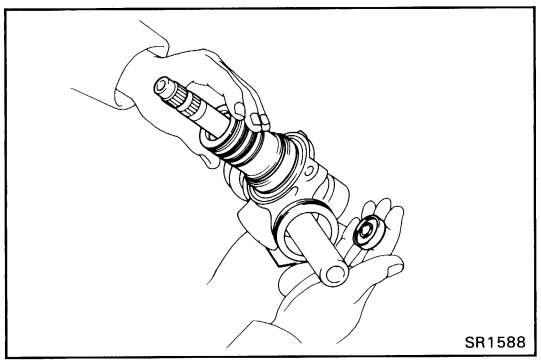

14. REMOVE CONTROL VALVE

Remove the control valve and bearing.

HINT: Do not fall out the bearing.

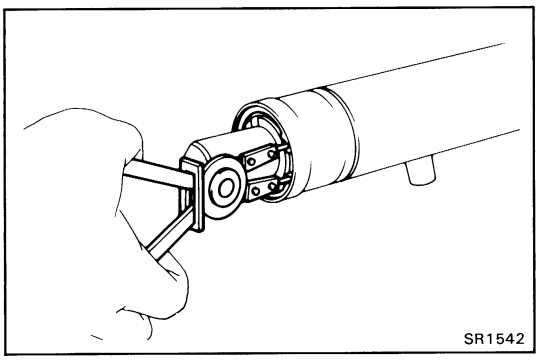

15. REMOVE CYLINDER END STOPPER, SPACER, OIL SEAL AND RACK

(a) Using snap ring pliers, remove the snap ring.

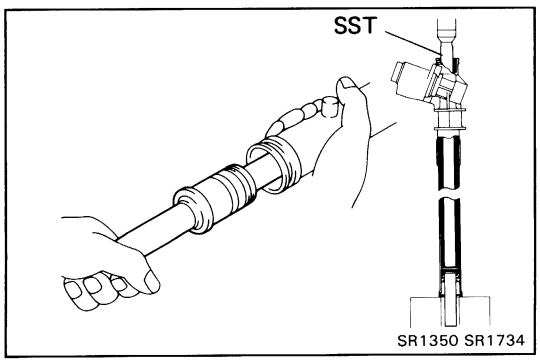

(b) Using SST, press the rack until the end stopper slightly touches the press block.

SST 09612-24014 (09612-10061)

(c) Pull out the rack with the cylinder end stopper, spacer and oil seal.

HINT: If necessary, slightly tap the rack end with a brass bar and hammer.

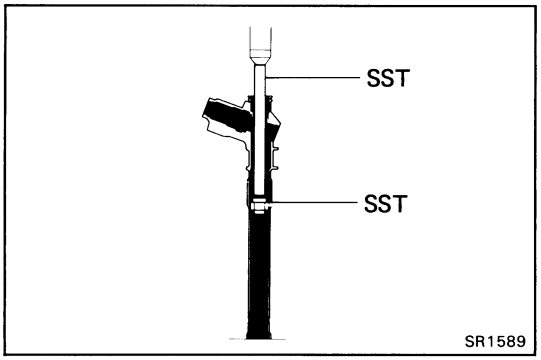

16. REMOVE CYLINDER HOUSING OIL SEAL AND SPACER

Using SST, press out the oil seal and spacer.

SST 09631-12020, 09631-20031

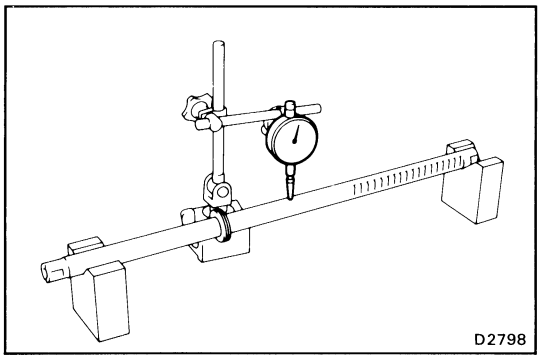

INSPECTION AND REPAIR OF GEAR HOUSING COMPONENTS

1. INSPECT RACK

(a) Check the rack for runout and for teeth wear or damage.

(b) Check the back surface for wear or damage.

If faulty, replace it.

Maximum runout: 0.3 mm (0.012 in.)

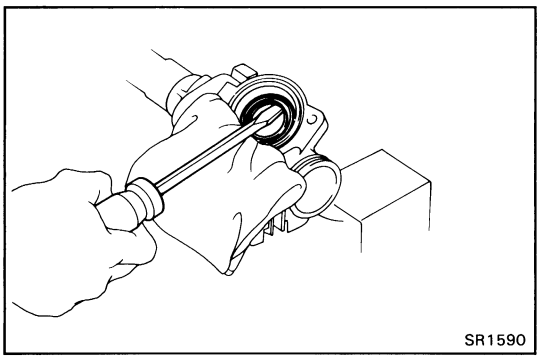

2. IF NECESSARY, REPLACE RACK HOUSING OIL SEAL

(a) Using a screwdriver, pry out the oil seal.

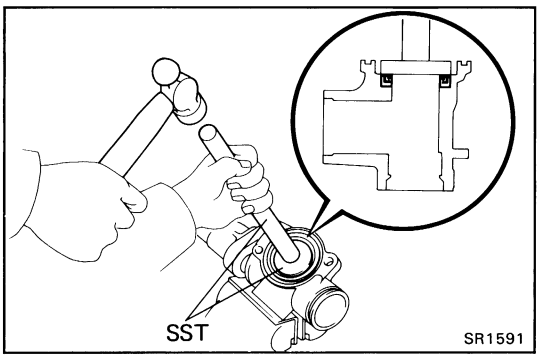

(b) Using SST, drive in a new oil seal.

SST 09630-24013 (09631-24070), 09631-12020

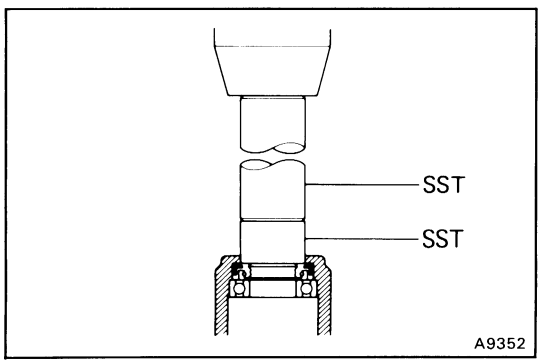

3. IF NECESSARY, REPLACE CONTROL VALVE HOUSING OIL SEAL AND BEARING

(a) Using SST, press out the oil seal with the bearing.

SST 09630-24013 (09620-24010), 09631-12020

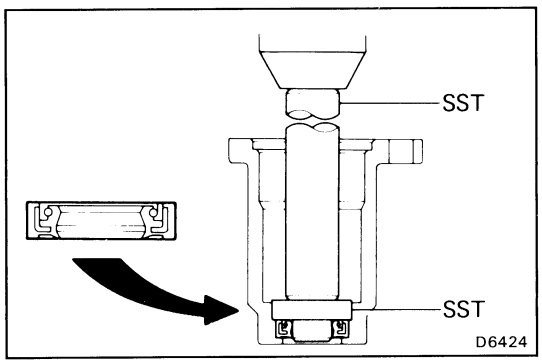

(b) Using SST, press in a new oil seal.
SST 09630-24013 (09620-24020), 09631-12020

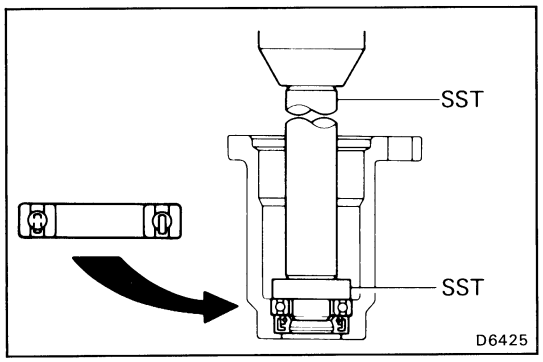

(c) Using SST, press in a new bearing.
SST 09630-24013 (09620-24030), 09631-12020

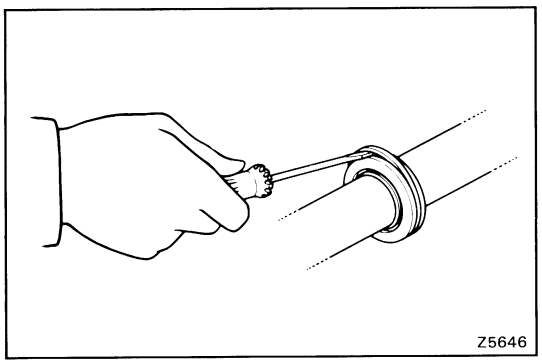

4. IF NECESSARY, REPLACE TEFLON RING AND O-RING

(a) Remove the teflon ring and O-ring.

NOTICE: Be careful not to damage the steering rack.

(b) Install a new O-ring.

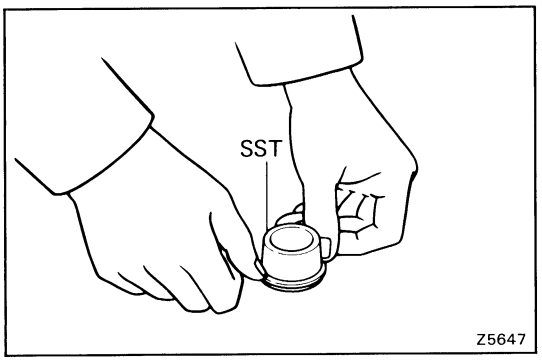

(c) Install a new teflon ring to SST and expand it.
SST 09630-24013 (09631-24020)

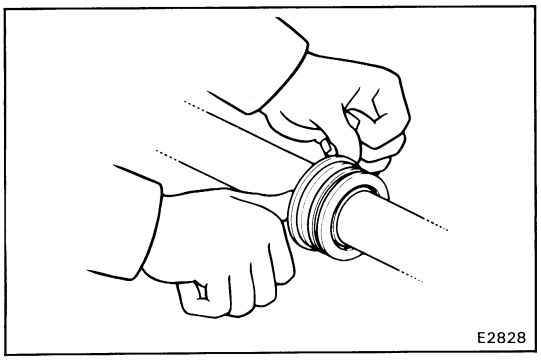

(d) Install the teflon ring to the piston.

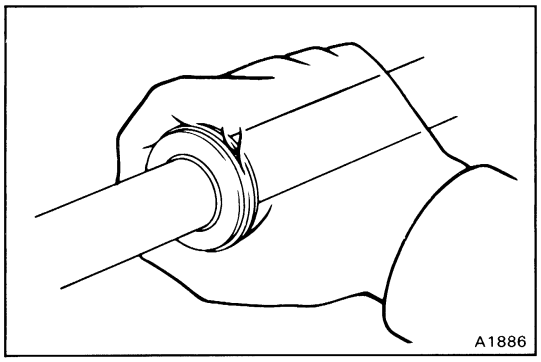

(e) Coat the teflon ring with power steering fluid and snug it down with your fingers.

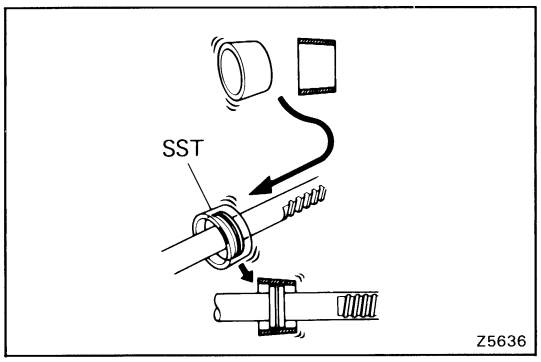

(f) Carefully slide the tapered end of SST over the teflon ring to seat it.

SST 09630-24013 (09631-24030)

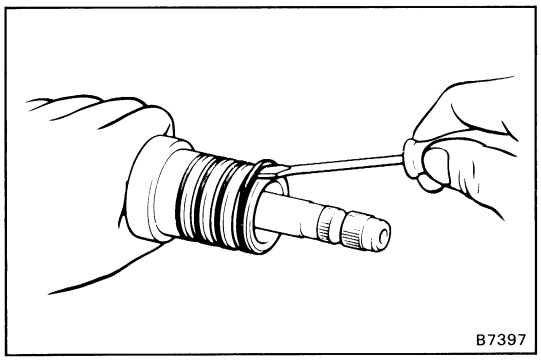

5. IF NECESSARY, REPLACE CONTROL VALVE TEFLON RINGS

(a) Using a screwdriver, remove the teflon rings.

NOTICE: Be careful not to damage the control valve.

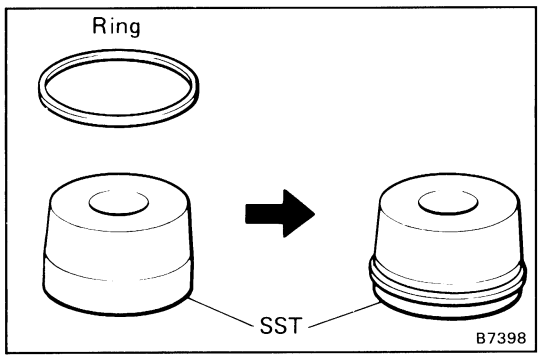

(b) Install new teflon rings to SST and expand them.

SST 09630-24013 (09620-24040)

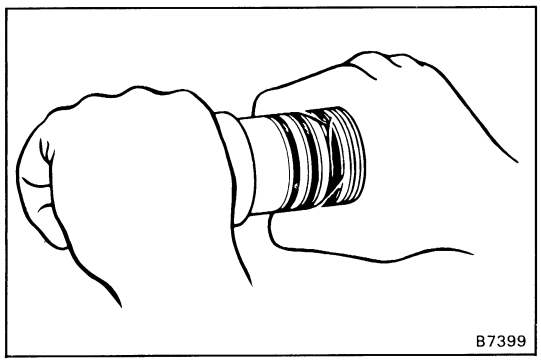

(c) Install the expanded teflon rings to the control valve and snug them down with your fingers.

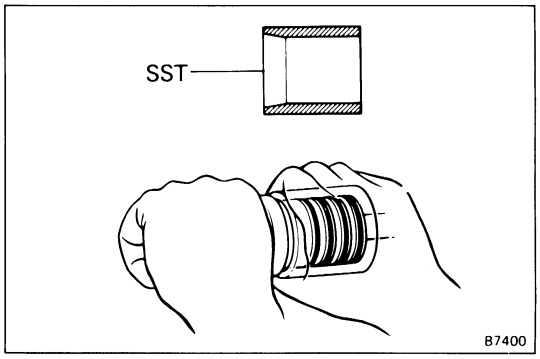

(d) Coat the teflon rings with power steering fluid, and carefully slide the tapered end of SST over the teflon rings to seat the rings.

SST 09630-24013 (09620-24050)

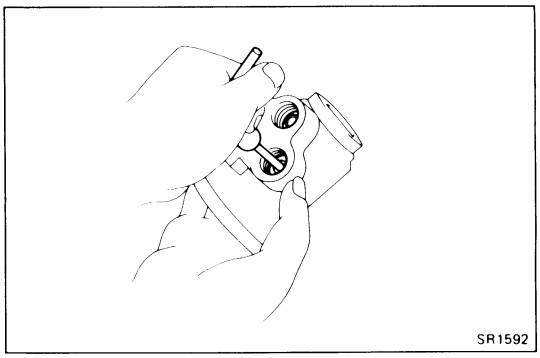

6. IF NECESSARY, REPLACE UNION SEAT

(a) Using a screw extractor, remove the union seat.

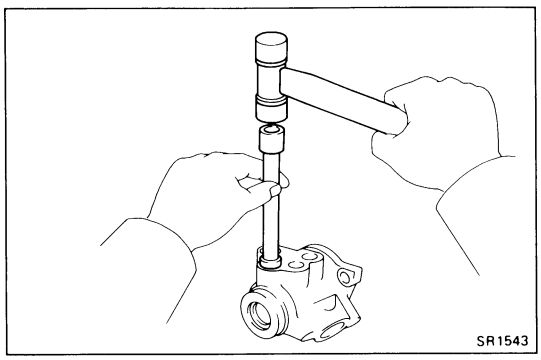

(b) Using a plastic hammer and extension bar, tap in a new union seat.

ASSEMBLY OF GEAR HOUSING

(See page SR-61)

1. COAT POWER STEERING FLUID OR GREASE ON FOLLOWING PARTS:

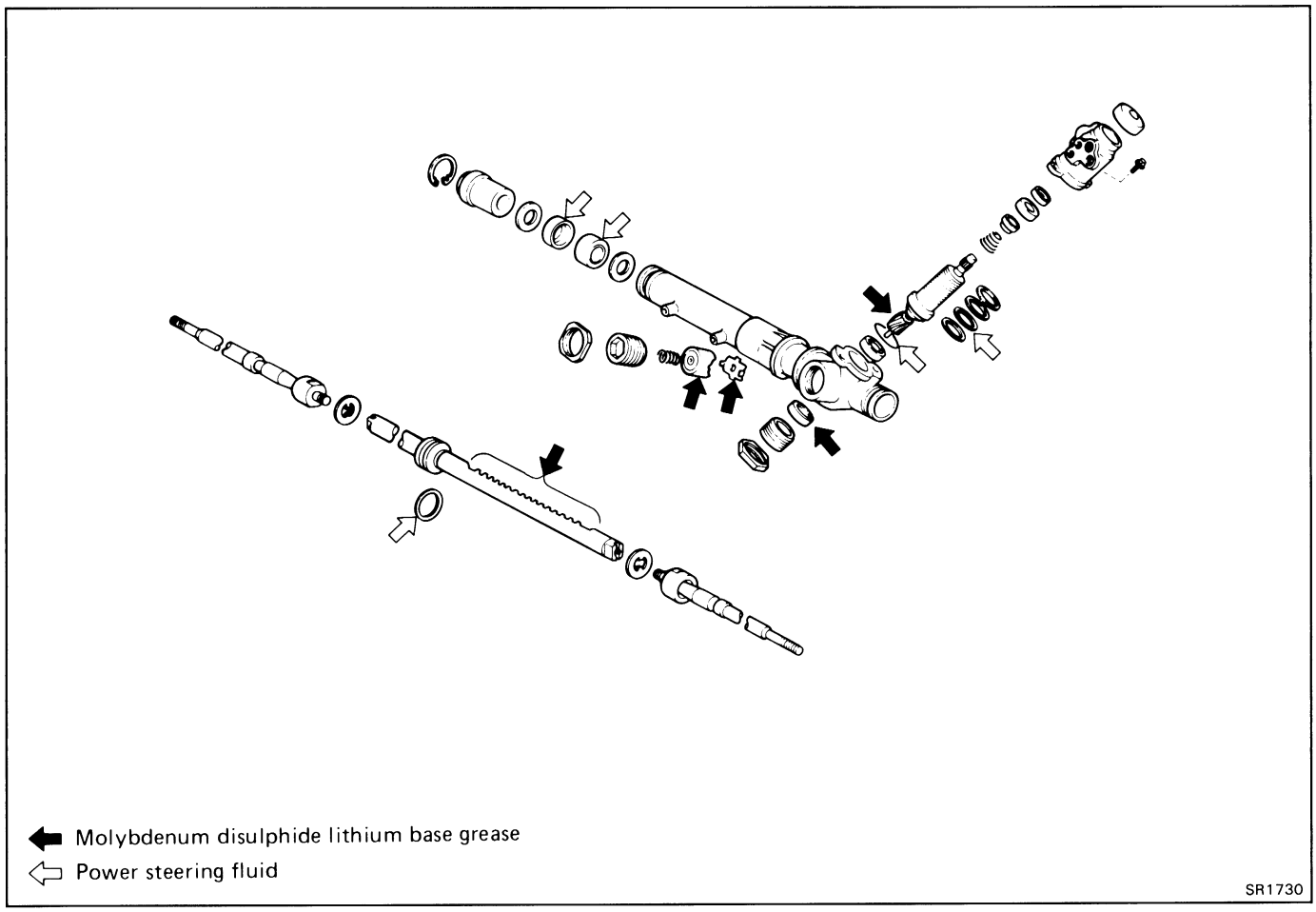

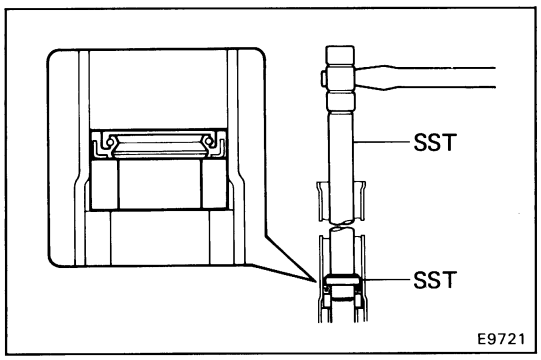

2. INSTALL CYLINDER HOUSING OIL SEAL AND SPACER

(a) Coat a new oil seal lip with power steering fluid.

(b) Insert SST into the oil seal and spacer.

SST 09631-12020, 09631-22070

(c) Tap in the spacer and oil seal softly.

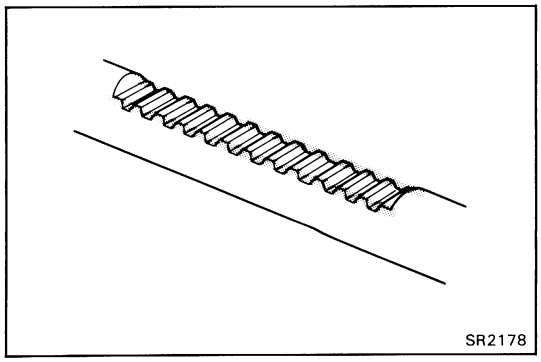

3. INSTALL RACK

(a) Install SST to the rack.

HINT: If necessary, scrape the burrs off the rack teeth end and burnish.

SST 09631-20102

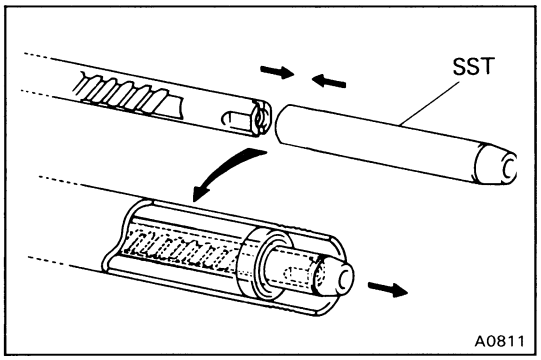

(b) Coat SST with power steering fluid.

(c) Insert the rack into the cylinder.

(d) Remove SST.

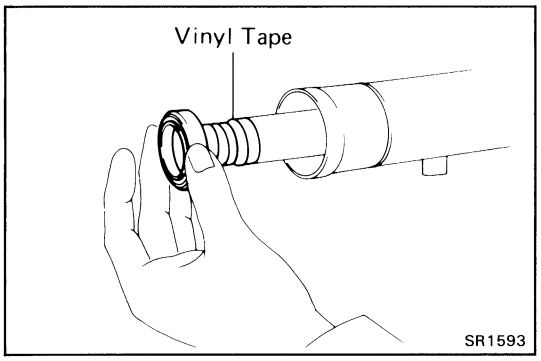

4. INSTALL CYLINDER END STOPPER, OIL SEAL AND SPACER

(a) To prevent oil seal lip damage, wind vinyl tape on the steering rack end, and apply power steering fluid.

(b) Install a new oil seal by pushing it into the cylinder in the direction shown in drawing, without tilting.

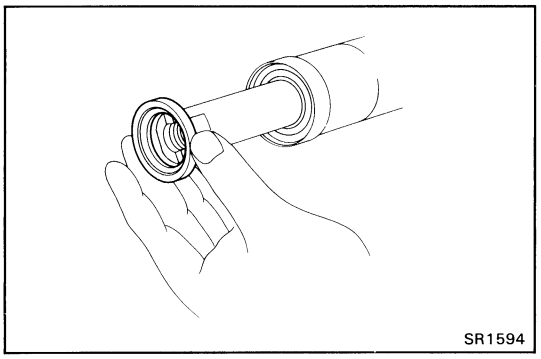

(c) Install the spacer.

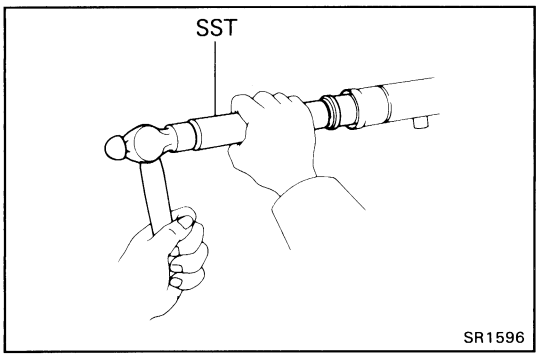

(d) Using SST, drive in the cylinder end stopper.

SST 09612-22011

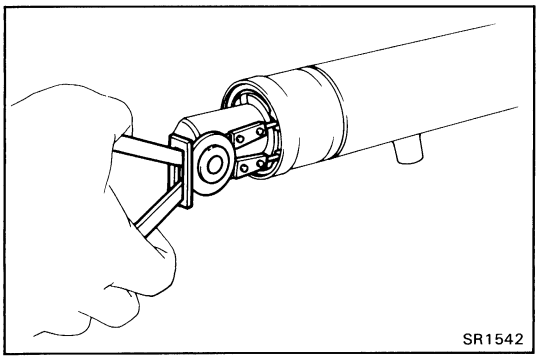

(e) Using snap ring pliers, install the snap ring.

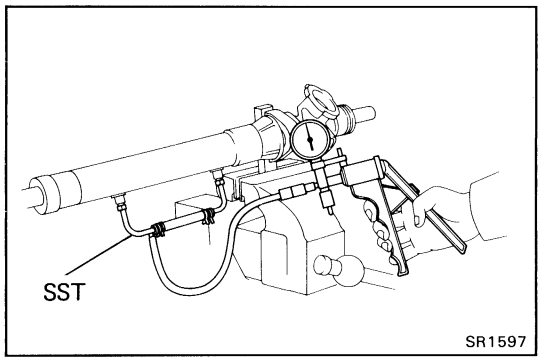

5. AIR TIGHTNESS TEST
[TEST 1]

(a) Install SST to the unions of the cylinder housing.

SST 09631-12070

(b) Apply 400 mmHg (15.75 in.Hg, 53.3 kPa) of vacuum for about 30 seconds.

(c) Check that there is no change in the vacuum.

If there is change in the vacuum, check the oil seals installation.

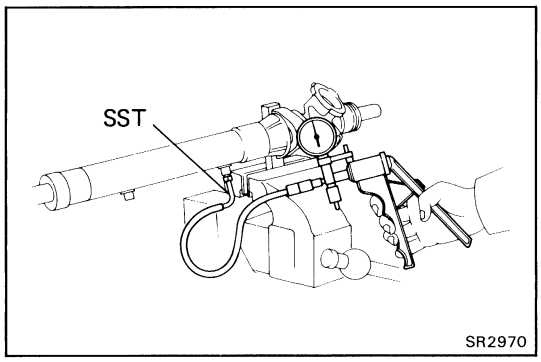

[TEST 2]

(a) Remove the L joint from SST.

SST 09631-12070

(b) Install L joint to the union of the control valve side.

(c) Apply 400 mmHg (15.75 in.Hg, 53.3 kPa) of vacuum for about 30 seconds.

(d) Check that there is no change in the vacuum.

If there is change in the vacuum, check the teflon ring and O-ring of the rack.

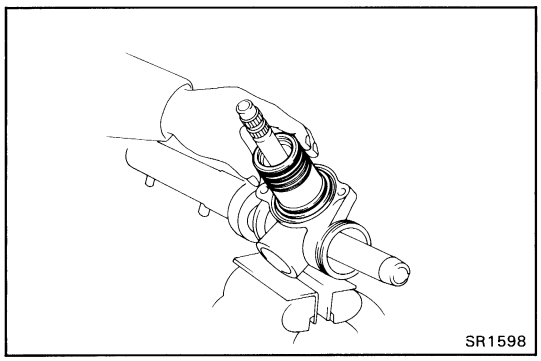

6. INSTALL CONTROL VALVE

(a) Coat the teflon rings with power steering fluid.

(b) Push the control valve into the housing.

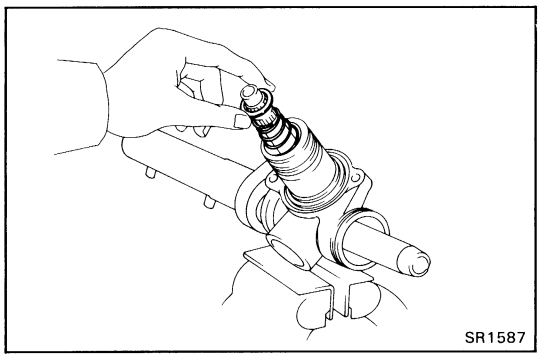

7. INSTALL O-RING, SPRING AND CONTROL VALVE SPRING SEAT

(a) Coat a new O-ring with power steering fluid, and install it to the rack housing.

(b) Install the spring and spring seat as shown.

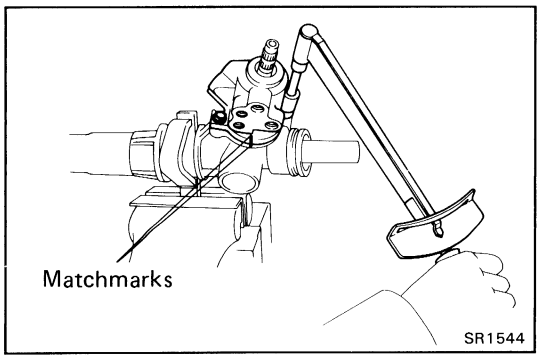

8. INSTALL CONTROL VALVE HOUSING

(a) Apply sealant to 2 or 3 threads of the bolt end.

Sealant: Part No.08833-00080, THREE BOND 1344, LOCTITE 242 or equivalent

(b) Align the matchmarks on the valve housing and rack housing.

(c) Install and torque the two bolts.

Torque: 315 kg-cm (23 ft-lb, 31 N·m)

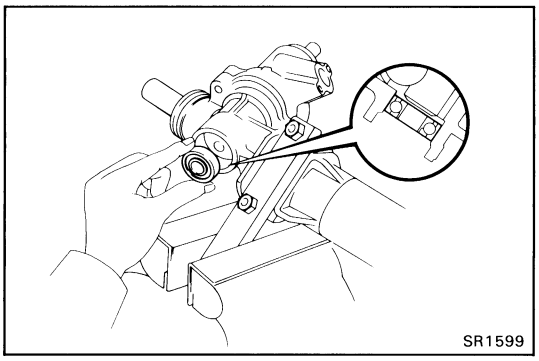

9. INSTALL CONTROL VALVE LOWER BEARING

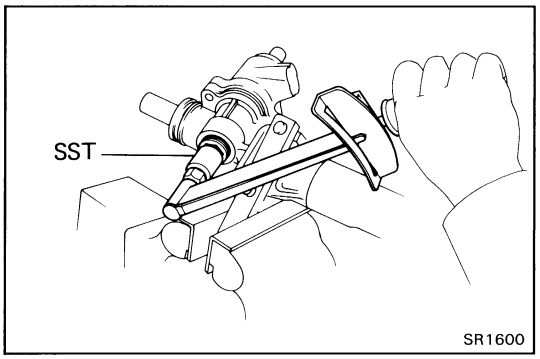

10. INSTALL BEARING GUIDE NUT

(a) Apply sealant to 2 or 3 threads of the guide nut.

Sealant: Part No.08833-00080 THREE BOND 1344, LOCTITE 242 or equivalent

(b) Using SST, torque the bearing guide nut.

SST 09612-24014 (09612-10022)

Torque: 150 kg-cm (11 ft-lb, 15 N·m)

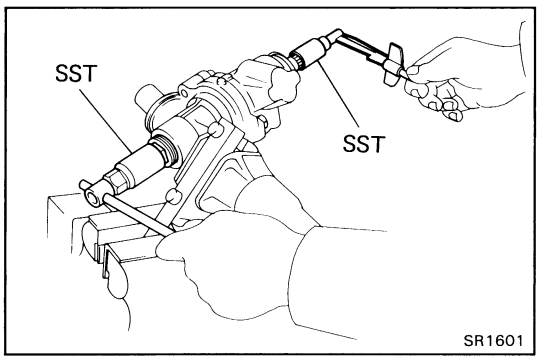

(c) Using SST and torque meter, loosen the bearing guide nut until the preload is within specification.

SST 09612-24014 (09612-10022), 09616-00010

Preload (turning): 4.5 — 6.5 kg-cm (3.9 — 5.6 in.-lb, 0.4 — 0.6 N·m)

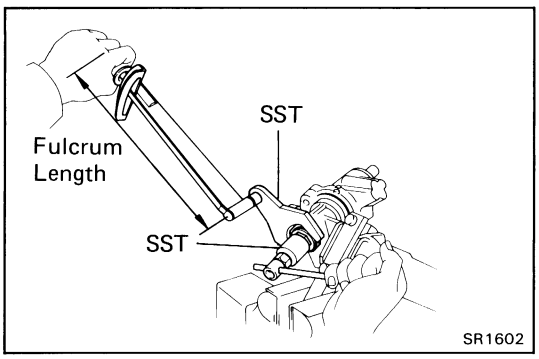

11. INSTALL BEARING GUIDE LOCK NUT

(a) Apply sealant to 2 or 3 threads of the lock nut.

Sealant: Part No.08833-00080, THREE BOND 1344, LOCTITE 242 or equivalent

(b) Using SST, install and torque the lock nut.

SST 09612-24014 (09612-10022, 09617-24020)

Torque: 570 kg-cm (41 ft-lb, 56 N·m)

HINT: Use a torque wrench with a fulcrum length of 340 mm (13.39 in.).

(c) Recheck the preload.

Preload (turning): 4.5 — 6.5 kg-cm (3.9 — 5.6 in.-lb, 0.4 — 0.6 N·m)

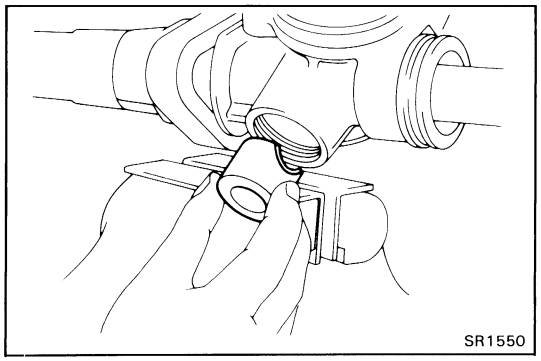

12. INSTALL RACK GUIDE SEAT, RACK GUIDE AND RACK GUIDE SPRING

(a) Install the rack guide with the seat.

(b) Install the spring.

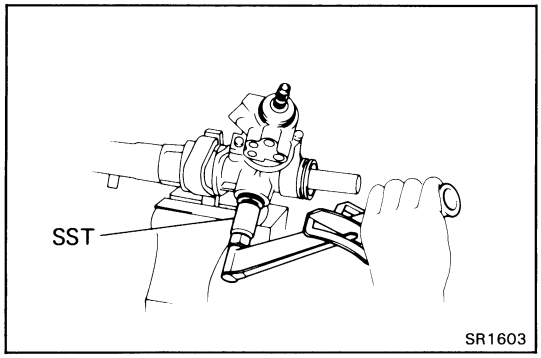

13. ADJUST TOTAL PRELOAD

(a) Apply sealant to 2 or 3 threads of the spring cap.

Sealant: Part No.08833-00080, THREE BOND 1344, LOCTITE 242 or equivalent

(b) Using SST, install and torque the spring cap.

SST 09612-24014 (09612-10022)

Torque: 250 kg-cm (18 ft-lb, 25 N·m)

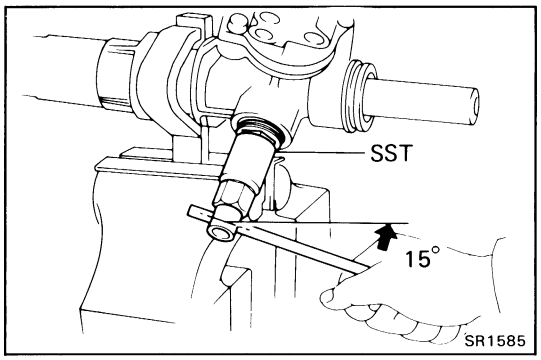

(c) Using SST, return the rack guide spring cap 15°.

SST 09612-24014 (09612-10022)

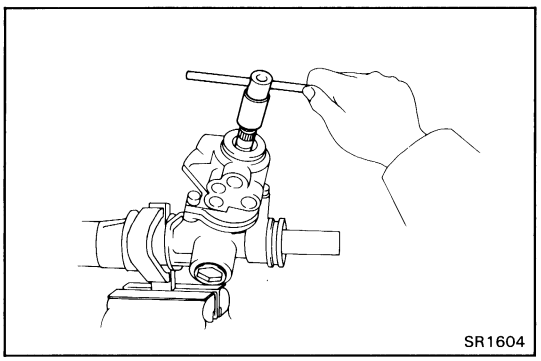

(d) Turn the control valve shaft right and left one or two times.

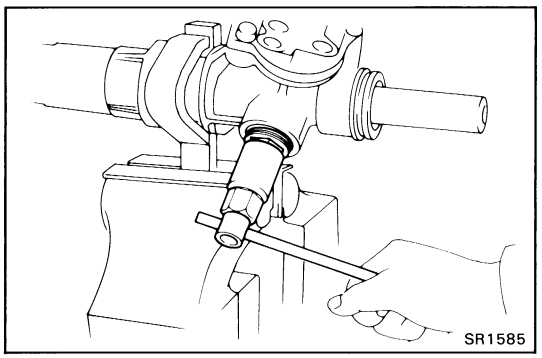

(e) Loosen the spring cap until the rack guide compression spring is not functioning.

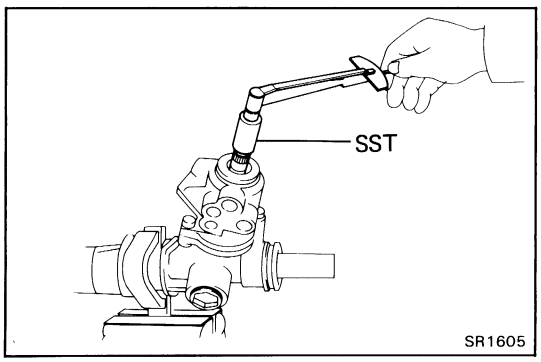

(f) Using SST and a torque meter, tighten the rack guide spring cap until the preload is within specification.

SST 09612-24014 (09612-10022), 09616-00010

Preload (turning): 9 — 12 kg-cm (7.8 — 10.4 in.-lb, 0.9 — 1.2 N·m)

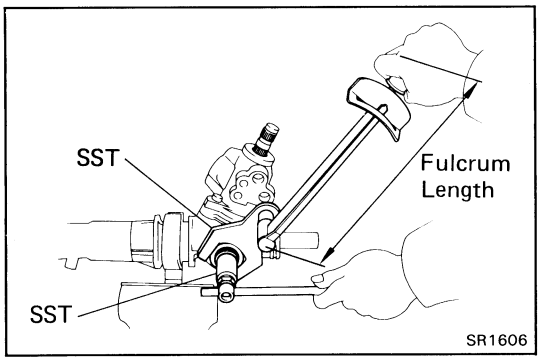

14. INSTALL RACK GUIDE SPRING CAP LOCK NUT

(a) Apply sealant to 2 or 3 threads of the lock nut.

Sealant: Part No.08833-00080, THREE BOND 1344, LOCTITE 242 or equivalent

(b) Using SST, install and torque the lock nut.

SST 09612-24014 (09612-10022, 09617-24020)

Torque: 570 kg-cm (41 ft-lb, 56 N·m)

HINT: Use a torque wrench with a fulcrum length of 340 mm (13.39 in.).

(c) Recheck the total preload.

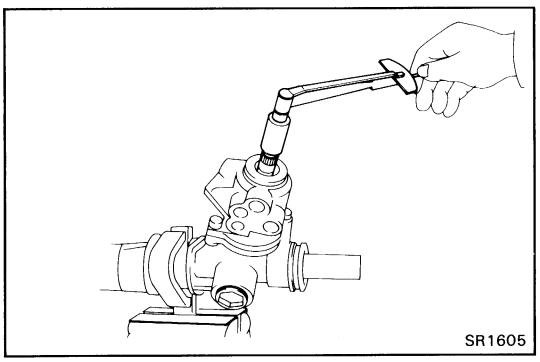

15. INSTALL DUST COVER

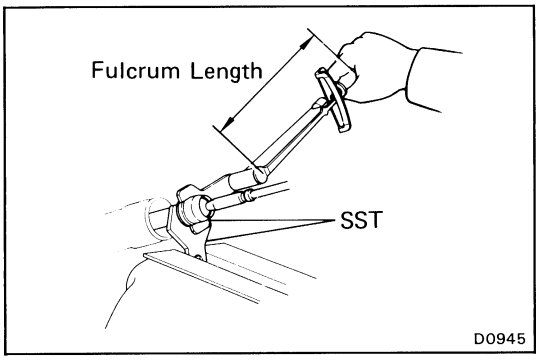

16. INSTALL CLAW WASHERS AND RACK ENDS

(a) Install new claw washers.

(b) Using SST, install and torque the rack ends.

SST 09612-24014 (09617-24011)
09617-14010

Torque: 940 kg-cm (68 ft-lb, 92 N·m)

HINT: Use a torque wrench with a fulcrum length of 425 mm (16.73 in.).

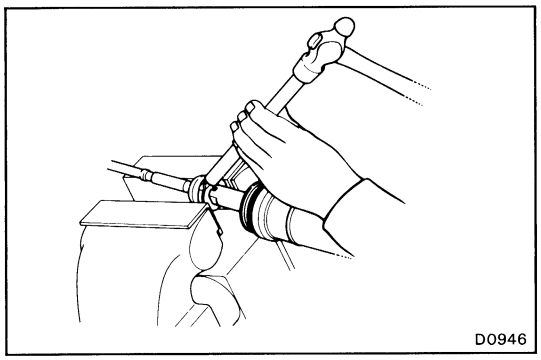

17. STAKE CLAW WASHERS

Using a brass bar and hammer, stake the two claw washers.

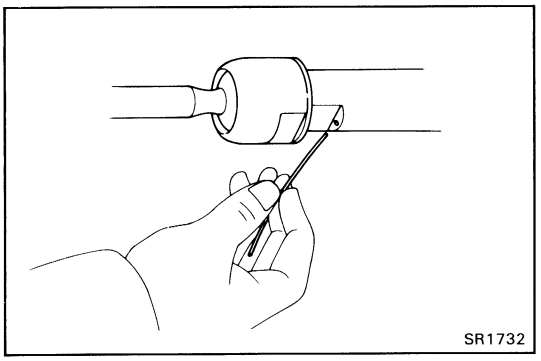

18. INSTALL RACK BOOTS, CLAMPS AND CLIPS

(a) Insure that the tube hole is not clogged with grease.

HINT: If the tube hole is clogged, the pressure inside the boot will change after it is assembled and the steering wheel turned.

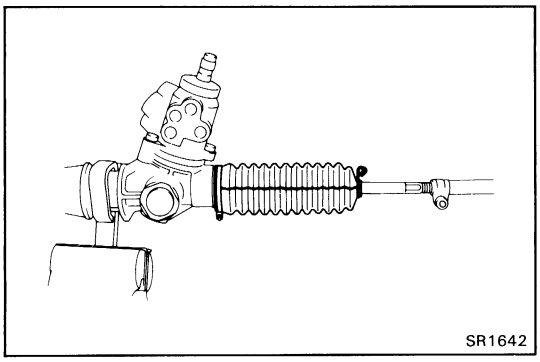

(b) Install the boots.

HINT: Be careful not to damage or twist the boots.

(c) Install the clamps with the ends facing downward.

(d) Install the clips with the ends facing outward.

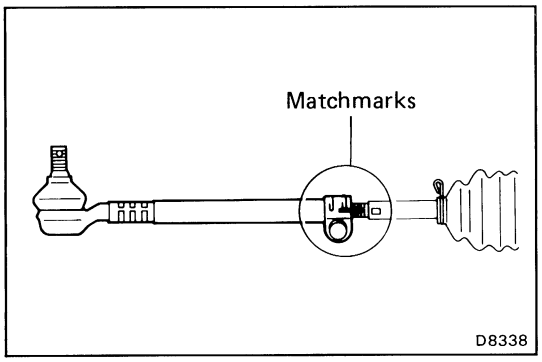

19. INSTALL TIE ROD ENDS

(a) Screw the tie rod ends onto the rack ends until the matchmarks are aligned.

(b) After adjusting toe-in, torque the clamp nuts.

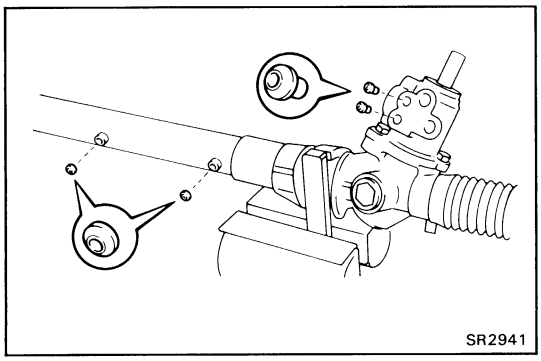

20. INSTALL RIGHT AND LEFT TURN PRESSURE TUBES

(a) Install new four union seats.

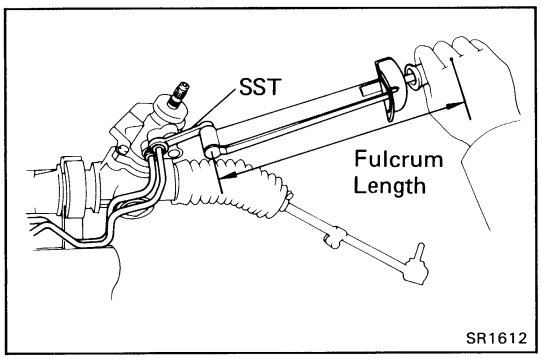

(b) Using SST, install and torque the tubes.

SST 09633-00020

Torque:

Valve housing side	**200 kg-cm (14 ft-lb, 20 N·m)**
Rack housing side	**240 kg-cm (17 ft-lb, 24 N·m)**

HINT: Use a torque wrench with a fulcrum length of 300 mm (11.81 in.).

COMPONENTS (w/ PPS)

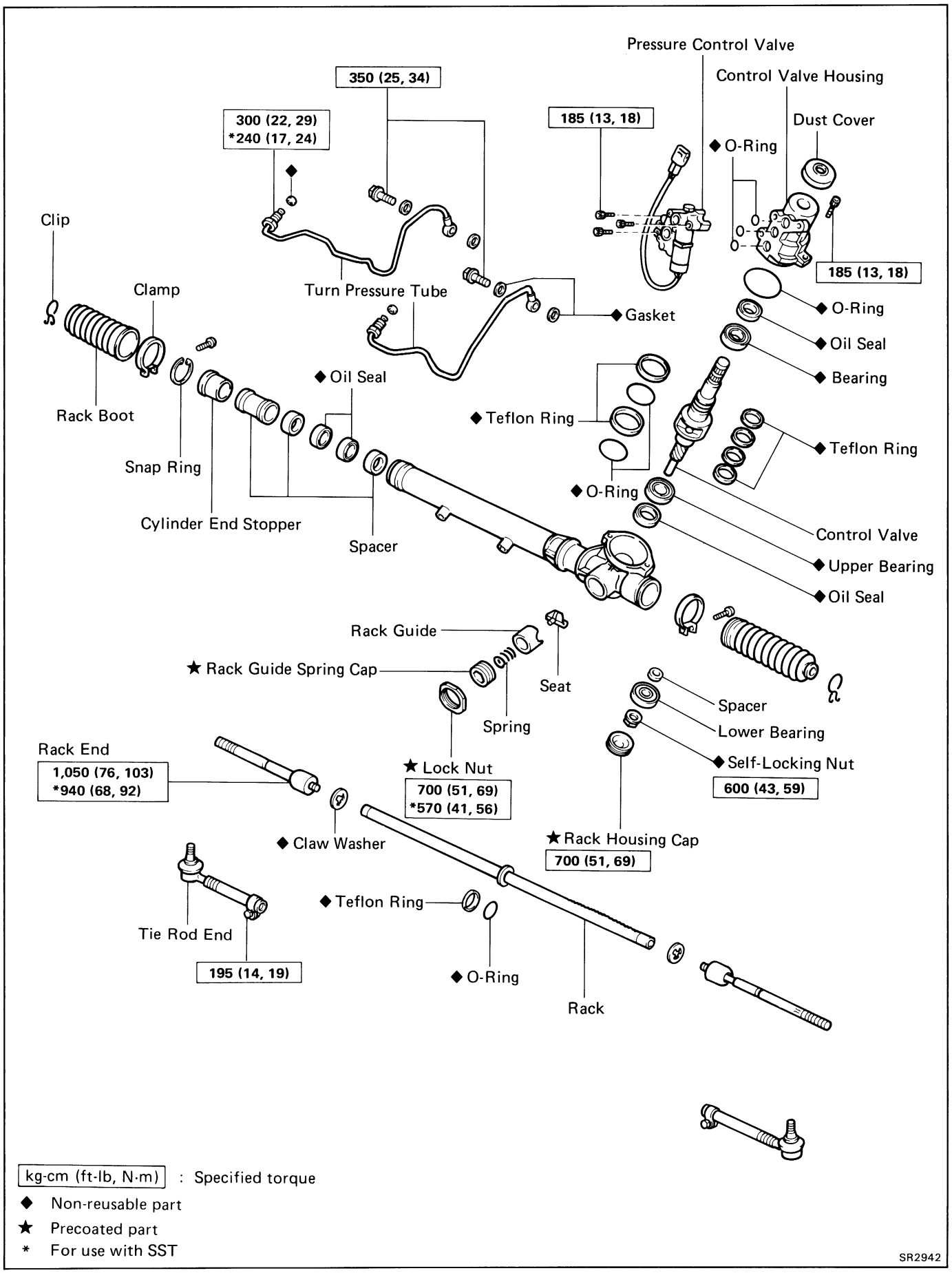

kg-cm (ft-lb, N·m) : Specified torque

◆ Non-reusable part

★ Precoated part

* For use with SST

SR2942

DISASSEMBLY OF STEERING GEAR HOUSING

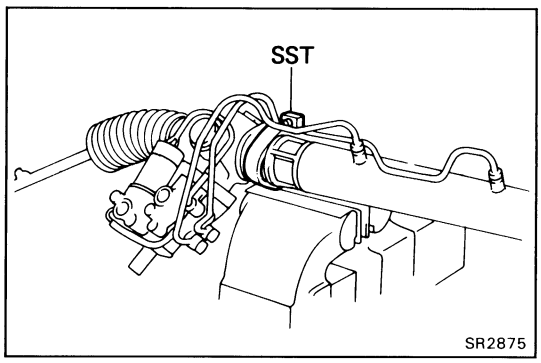

1. CLAMP GEAR HOUSING IN VISE

Using SST, secure the steering gear in a vise.

SST 09612-00012

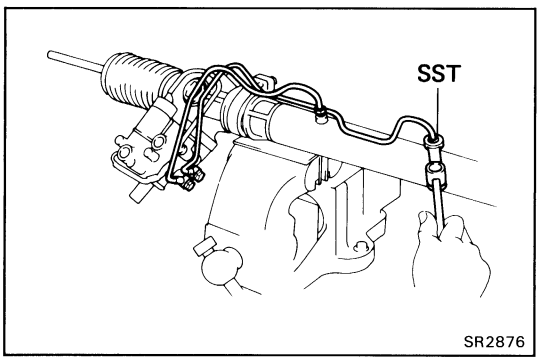

2. REMOVE RIGHT AND LEFT TURN PRESSURE TUBES

(a) Remove the two union bolts and four gaskets.

(b) Using SST, remove the pressure tubes.

SST 09633-00020

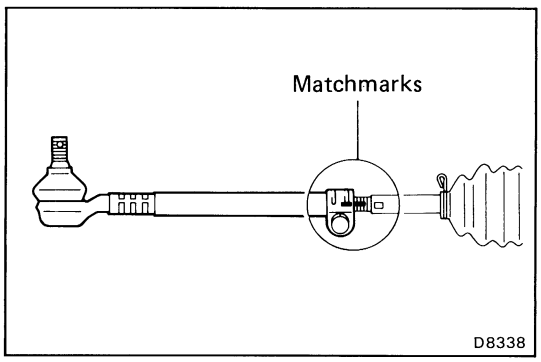

3. REMOVE TIE ROD ENDS

(a) Loosen the clamp lock nut and place matchmarks on the tie rod tube and rack end.

(b) Remove tie rod ends.

4. REMOVE RACK BOOTS, CLAMPS AND CLIPS

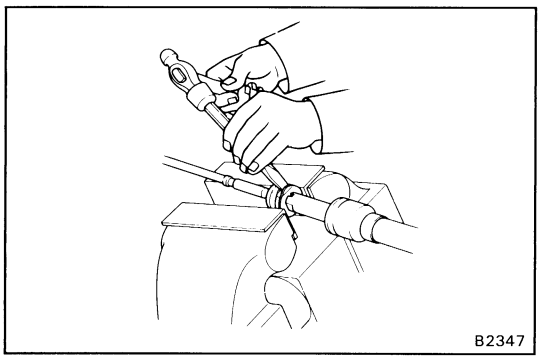

5. REMOVE RACK ENDS AND CLAW WASHERS

(a) Unstake the claw washers.

NOTICE: Avoid any impact to the rack.

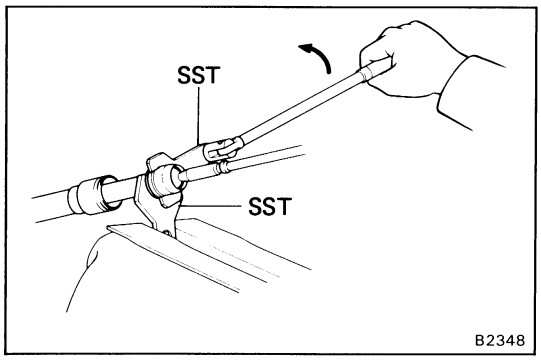

(b) Using SST, remove the rack ends.

SST 09612-24014 (09617-24011)
09617-14010

(c) Remove the claw washers.

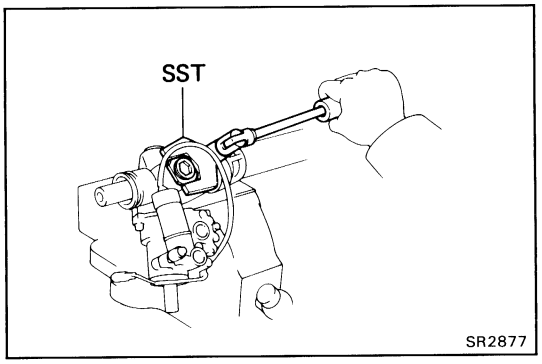

6. REMOVE RACK GUIDE SPRING CAP LOCK NUT

Using SST, remove the rack guide spring cap lock nut.
SST 09612-24014 (09617-24020)

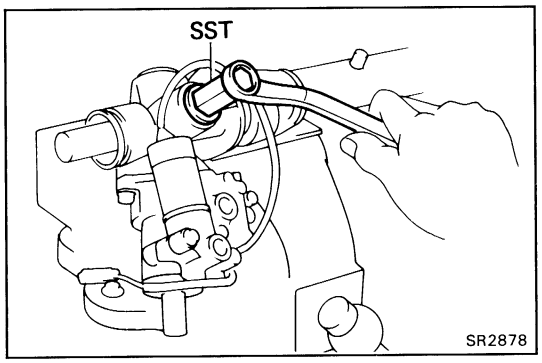

7. REMOVE RACK GUIDE SPRING CAP

Using SST, remove the rack guide spring cap.
SST 09612-24014 (09612-10022)

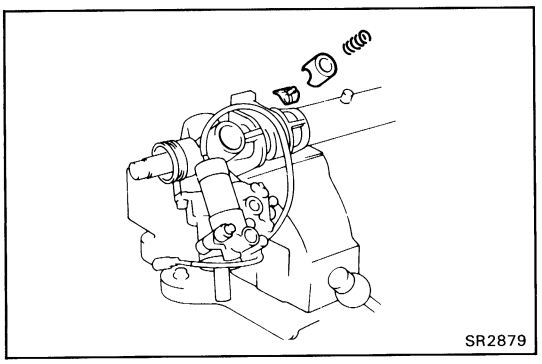

8. REMOVE RACK GUIDE SPRING, RACK GUIDE AND SEAT

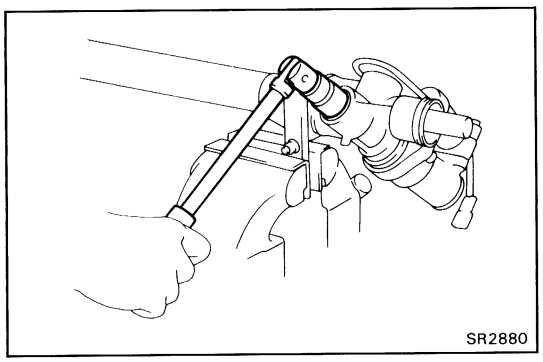

9. REMOVE RACK HOUSING CAP

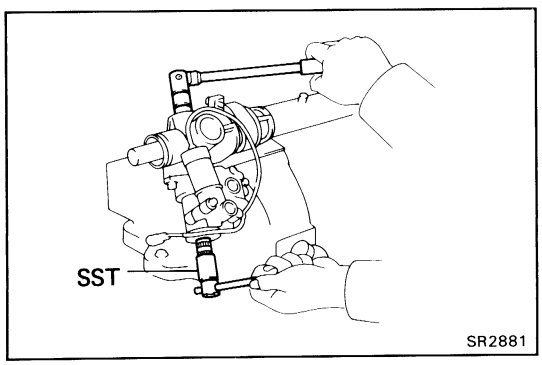

10. REMOVE SELF-LOCKING NUT

Using SST, remove the self-locking nut.
SST 09616-00010

11. REMOVE DUST COVER

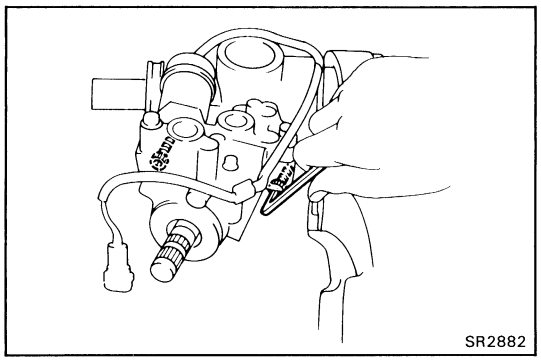

12. REMOVE CONTROL VALVE HOUSING

(a) Place matchmarks on the valve housing and rack housing.

(b) Using a hexagon wrench, remove the two bolts.

(c) Pull out the valve with the valve housing.

(d) Remove the O-ring from the rack housing.

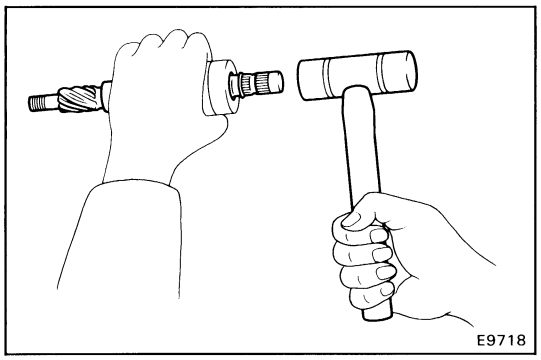

13. REMOVE CONTROL VALVE

Using a plastic hammer, tap out the control valve.

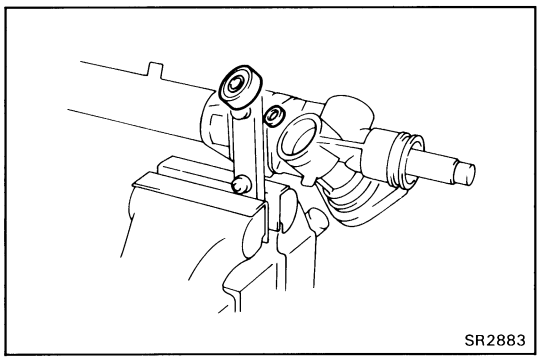

14. REMOVE LOWER BEARING AND SPACER

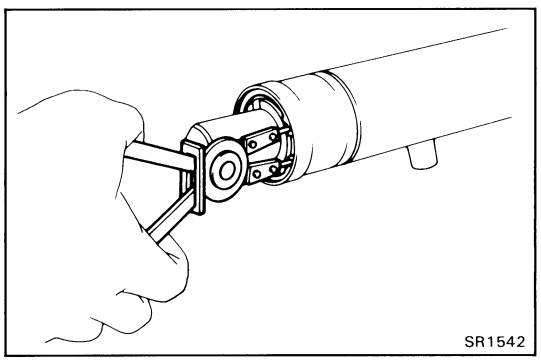

15. REMOVE CYLINDER END STOPPER, SPACERS, OIL SEAL AND RACK

(a) Using snap ring pliers, remove the snap ring.

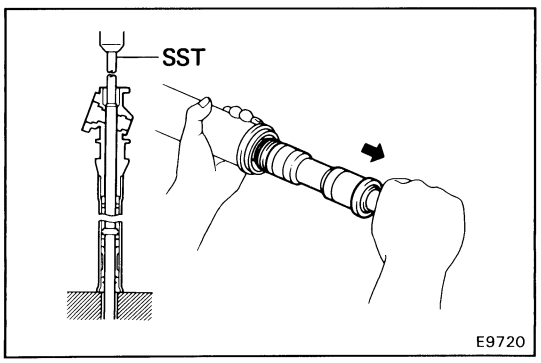

(b) Using SST, press the rack until the end stopper slightly touches the press block.

SST 09612-24014 (09612-10061)

(c) Pull out the rack with the cylinder end stopper, two spacers and oil seal.

HINT: If necessary, slightly tap the rack end with a brass bar and hammer.

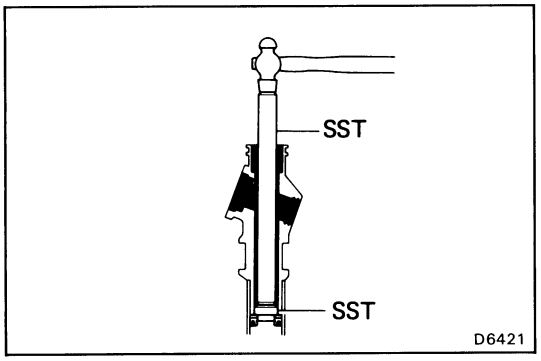

16. REMOVE CYLINDER HOUSING OIL SEAL AND SPACER

Using SST, tap out the oil seal and spacer.

SST 09631-12020, 09631-20031

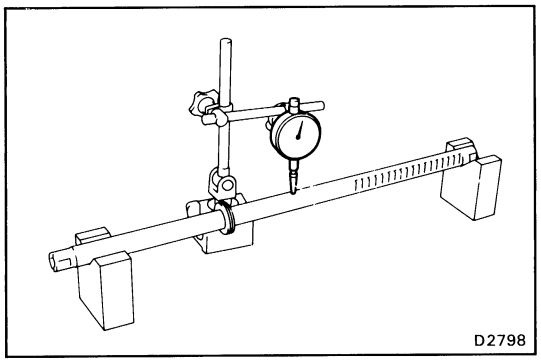

INSPECTION AND REPAIR OF GEAR HOUSING COMPONENTS

1. INSPECT RACK

(a) Check the rack for runout and for teeth wear or damage.

(b) Check the back surface for wear or damage.

If faulty, replace it.

Maximum runout: 0.3 mm (0.012 in.)

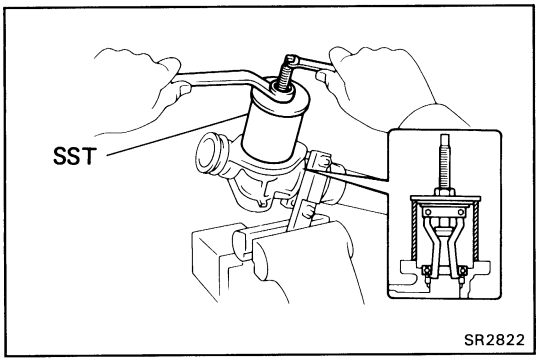

2. IF NECESSARY, REPLACE RACK HOUSING BEARING AND OIL SEAL

(a) Using SST, remove the bearing.

SST 09612-30012

NOTICE: Be careful not to damage the rack housing.

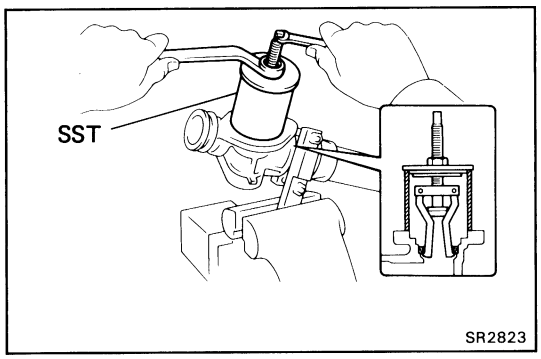

(b) Using SST, remove the oil seal.

SST 09612-30012

NOTICE: Be careful not to damage the rack housing.

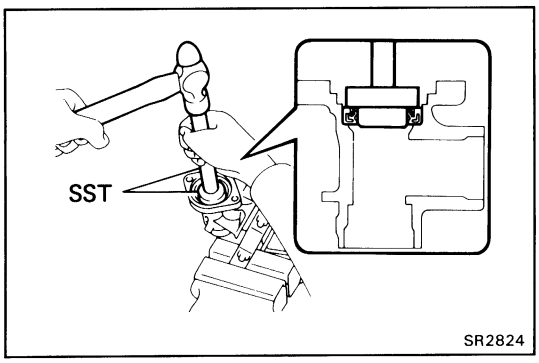

(c) Using SST, install a new oil seal.

SST 09620-30010 (09624-30010, 09631-00020)

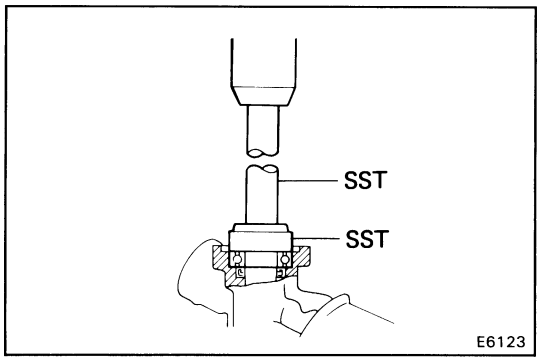

(d) Using SST, press in a new bearing.

SST 09620-30010 (09626-30010, 09631-00020)

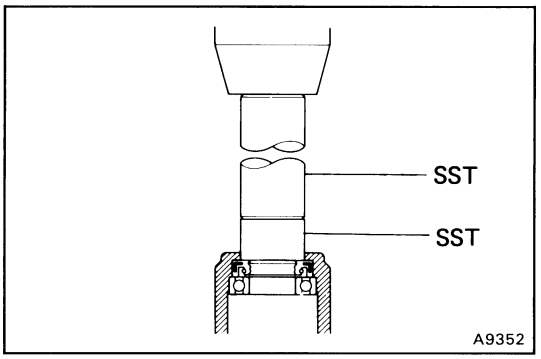

3. IF NECESSARY, REPLACE CONTROL VALVE HOUSING OIL SEAL AND BEARING

(a) Using SST, press out the oil seal with the bearing.

SST 09630-24013 (09620-24010), 09631-12020

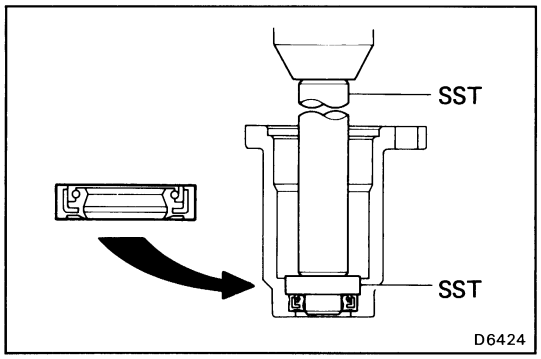

(b) Using SST, press in a new oil seal.

SST 09630-24013 (09620-24020),09631-12020

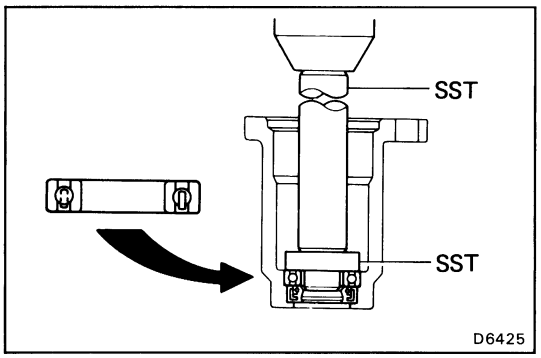

(c) Using SST, press in a new bearing.

SST 09630-24013 (09620-24030), 09631-12020

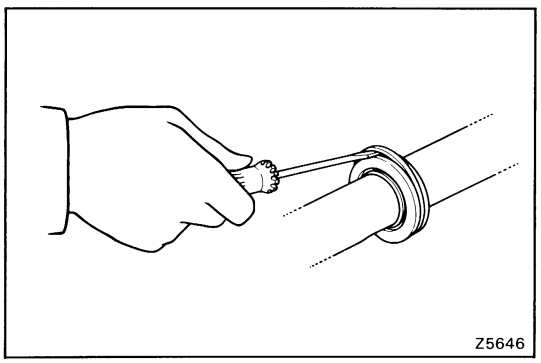

4. IF NECESSARY, REPLACE TEFLON RING AND O-RING

(a) Remove the teflon ring and O-ring.

NOTICE: Be careful not to damage the steering rack.

(b) Install a new O-ring.

(c) Expand a new teflon ring with your fingers.

NOTICE: Be careful not to over-expand the teflon ring.

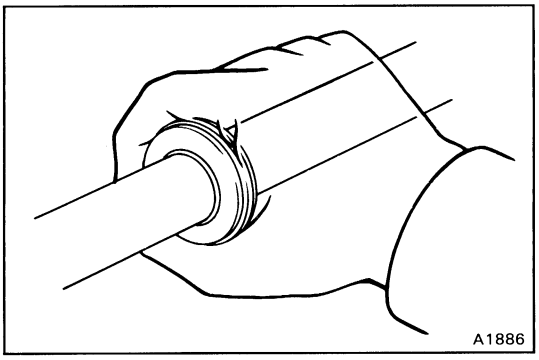

(d) Install the teflon ring to the steering rack.

(e) Coat the teflon ring with power steering fluid and snug it down with your fingers.

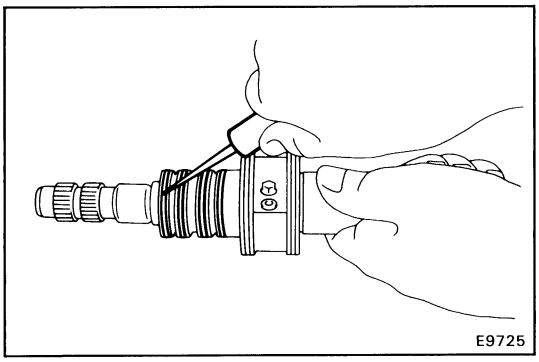

5. IF NECESSARY, REPLACE CONTROL VALVE TEFLON RINGS

(a) Using a screwdriver, remove the teflon rings.

NOTICE: Be careful not to damage the control valve.

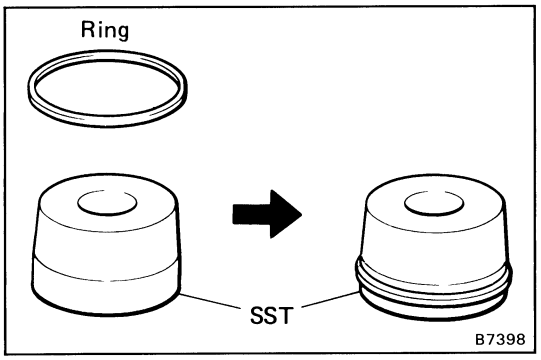

(b) Install new teflon rings to SST and expand them.

SST 09631-20070

(c) Install the expanded teflon rings to the control valve.

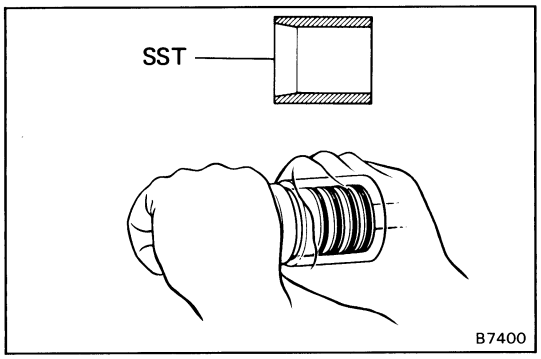

(d) Coat the teflon rings with power steering fluid, and snug them down with your fingers.

NOTICE: Be careful not to damage the teflon rings.

(e) Carefully slide the tapered end of the SST over the teflon rings to seat the rings.

SST 09631-20081

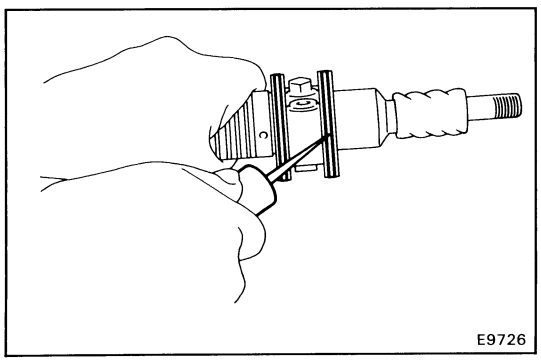

6. IF NECESSARY, REPLACE HYDRAULIC REACTION CHAMBER TEFLON RINGS AND O-RINGS

(a) Remove the teflon rings and O-rings.

NOTICE: Be careful not to damage the control valve.

(b) Install two new O-rings.

(c) Expand new teflon rings with your fingers.

NOTICE: Be careful not to over-expand the teflon rings.

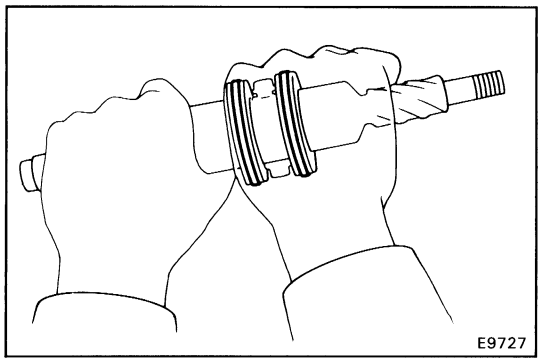

(d) Install the expanded teflon rings to the control valve.

(e) Coat the teflon rings with power steering fluid, and snug them down with your fingers.

NOTICE: Be careful not to damage the teflon rings.

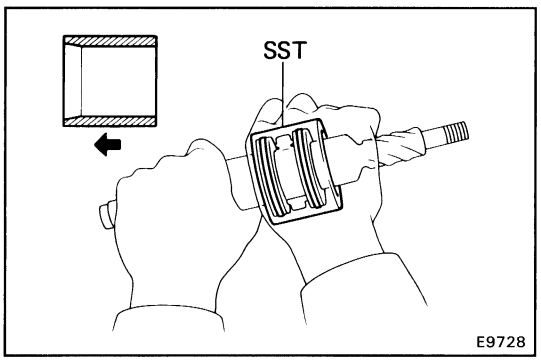

(f) Carefully slide the tapered end of the SST over the teflon rings to seat the rings.

SST 09631-32020

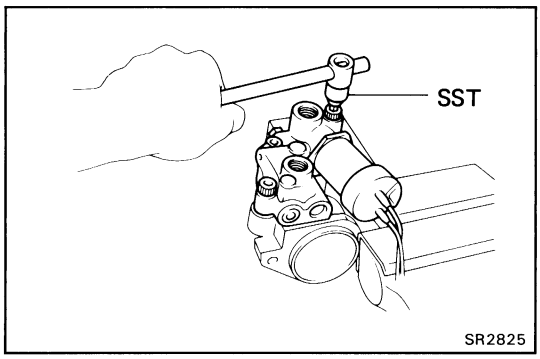

7. IF NECESSARY, REPLACE PRESSURE CONTROL VALVE

(a) Using SST, remove the three bolts.

SST 09313-30021

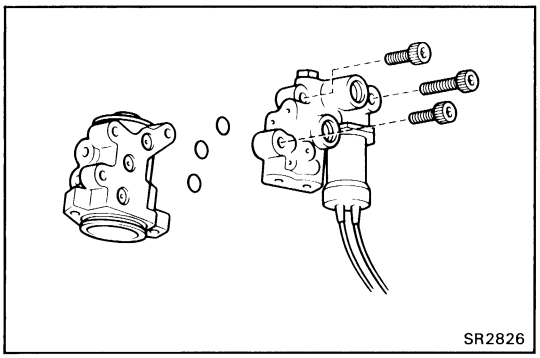

(b) Remove the three O-rings from the housing.

(c) Coat new three O-rings with power steering fluid, and install them on the control valve housing.

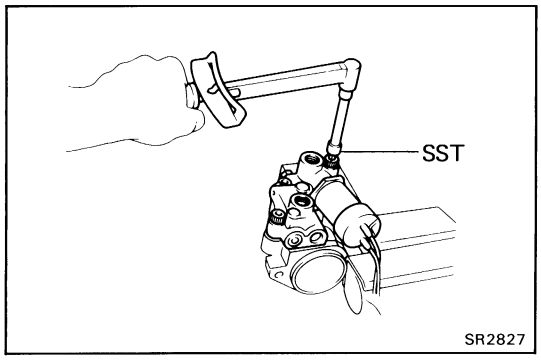

(d) Using SST, install a new pressure control valve.

SST 09313-30021

Torque: 185 kg-cm (13 ft-lb, 18 N·m)

ASSEMBLY OF STEERING GEAR HOUSING

(See page SR-76)

1. COAT POWER STEERING FLUID OR GREASE ON FOLLOWING PARTS:

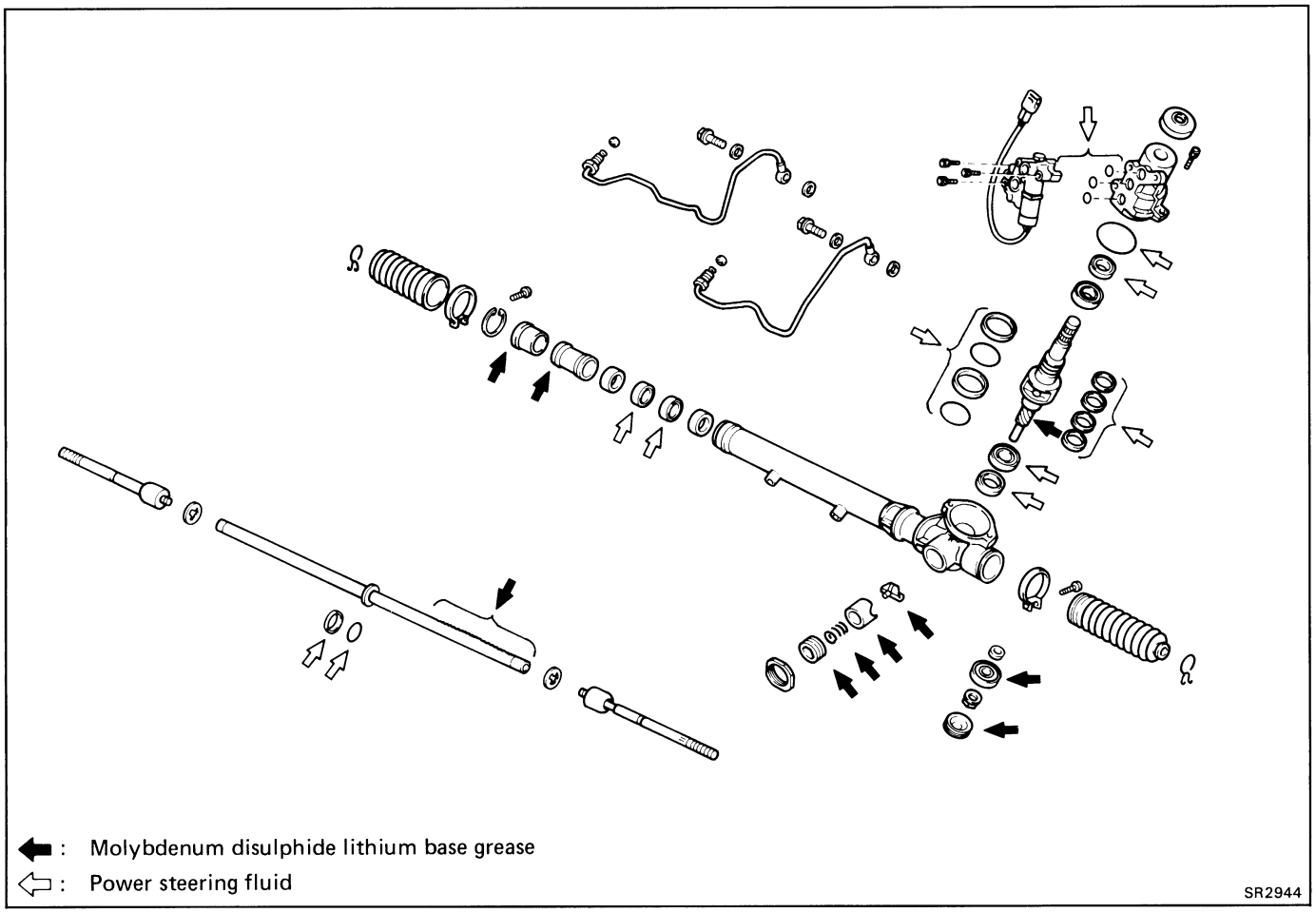

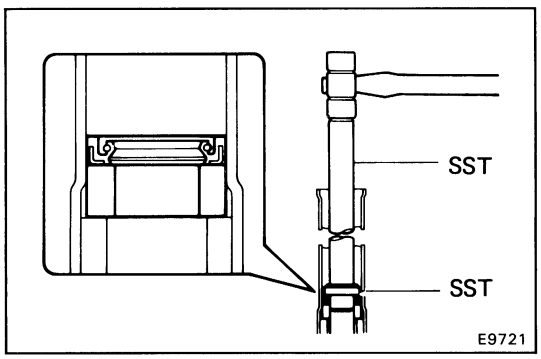

2. INSTALL CYLINDER HOUSING OIL SEAL AND SPACER

(a) Coat a new oil seal lip with power steering fluid.

(b) Insert SST into the oil seal and spacer.

SST 09631-12020, 09631-32010

(c) Tap in the spacer and oil seal softly.

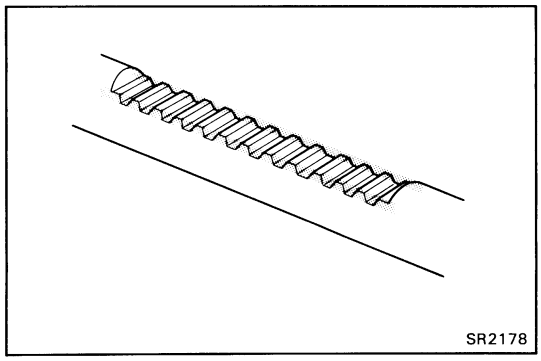

3. INSTALL RACK

(a) Install SST to the rack.

HINT: If necessary, scrape the burrs off the rack teeth end and burnish.

SST 09631-20102

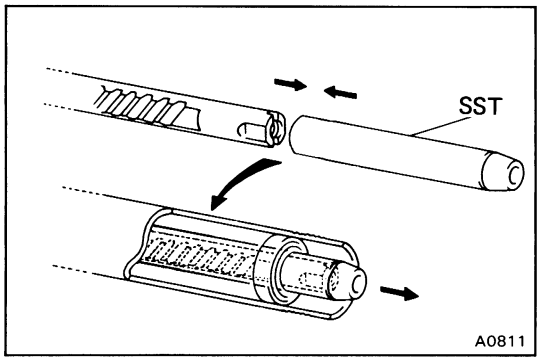

(b) Coat SST with power steering fluid.

(c) Insert the rack into the cylinder.

(d) Remove SST.

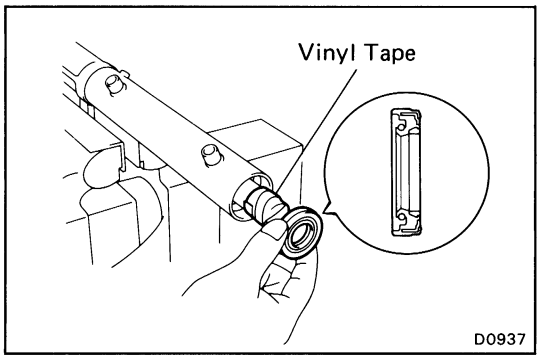

4. INSTALL CYLINDER END STOPPER, OIL SEAL AND SPACERS

(a) To prevent oil seal lip damage, wind vinyl tape on the steering rack end, and apply power steering fluid.

(b) Install the oil seal by pushing it into the cylinder in the direction shown in drawing, without tilting.

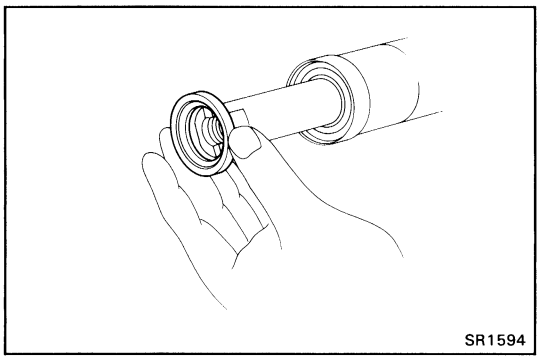

(c) Install the two spacers.

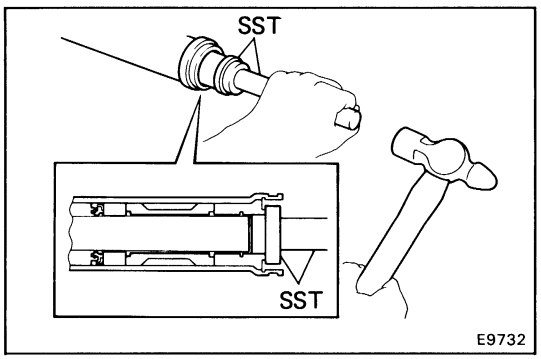

(d) Using SST, drive in the cylinder end stopper.

SST 09620-30010 (09627-30010, 09631-00020)

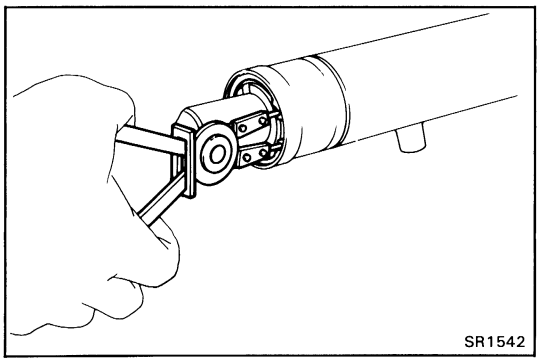

(e) Using snap ring pliers, install the snap ring.

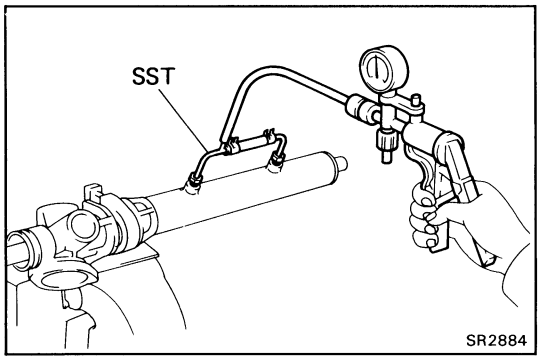

5. AIR TIGHTNESS TEST

[TEST 1]

(a) Install SST to the unions of the cylinder housing.

SST 09631-12070

(b) Apply 400 mmHg (15.75 in.Hg, 53.3 kPa) of vacuum for about 30 seconds.

(c) Check that there is no change in the vacuum.

If there is change in the vacuum, check the oil seals installation.

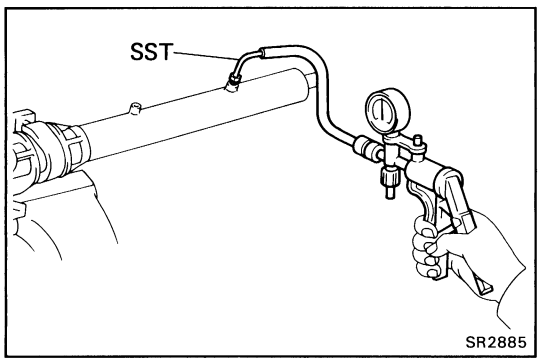

[TEST 2]

(a) Remove the L joint from SST.

SST 09631-12070

(b) Install L joint to the union of the cylinder end side.

(c) Apply 400 mmHg (15.75 in.Hg, 53.3 kPa) of vacuum for about 30 seconds.

(d) Check that there is no change in the vacuum.

If there is change in the vacuum, check the teflon ring and O-ring of the rack.

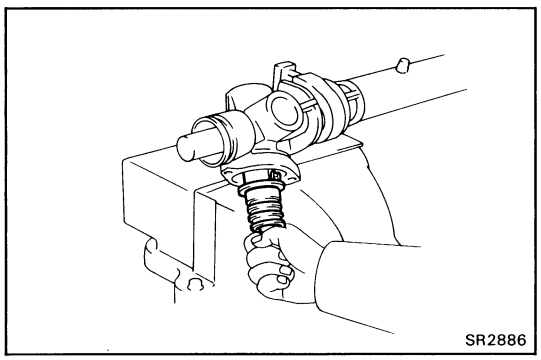

6. INSTALL CONTROL VALVE

(a) Coat the teflon rings with power steering fluid.

(b) Push the control valve into the housing.

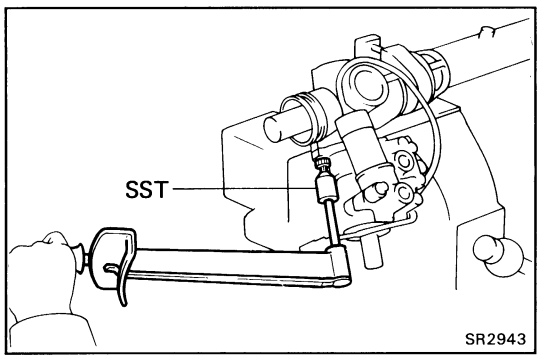

7. INSTALL CONTROL VALVE HOUSING

(a) Coat a new O-ring with power steering fluid, and install it to the housing.

(b) Align the matchmarks on the valve housing and rack housing.

(c) Using a hexagon wrench, temporarily tighten the two bolts.

(d) Using SST, tighten the two bolts.

SST 09313-30021

Torque: 185 kg-cm (13 ft-lb, 18 N·m)

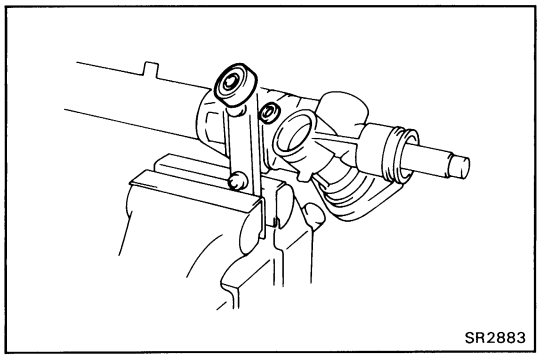

8. INSTALL LOWER BEARING AND SPACER

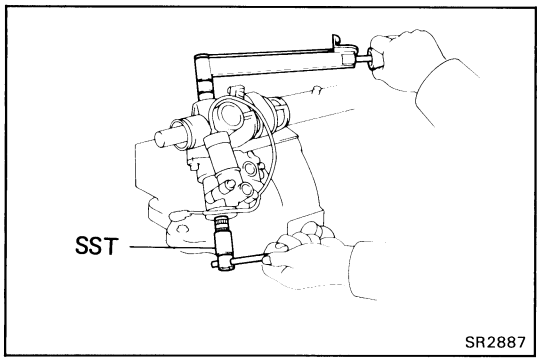

9. INSTALL SELF-LOCKING NUT

Using SST, install a new self-locking nut.

SST 09616-00010

Torque: 600 kg-cm (43 ft-lb, 59 N·m)

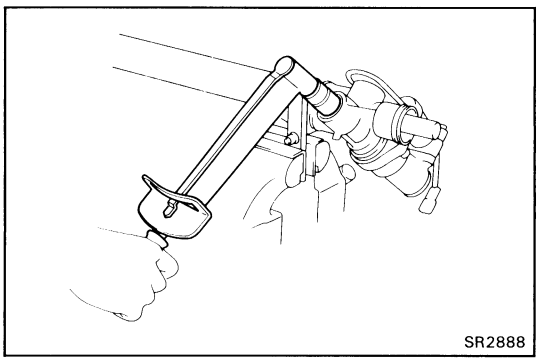

10. INSTALL RACK HOUSING CAP

(a) Apply sealant to 2 or 3 threads of the cap.

Sealant: Part No. 08833-00080, THREE BOND 1344, LOCTITE 242 or equivalent

(b) Install the cap.

Torque: 700 kg-cm (51 ft-lb, 69 N·m)

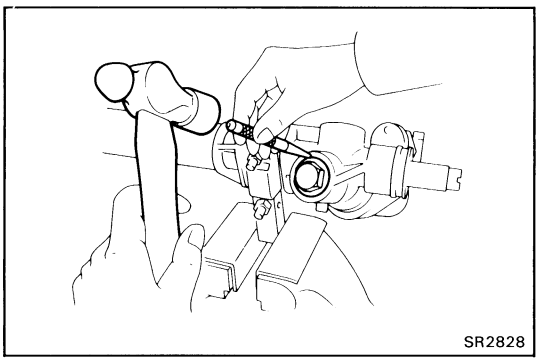

(c) Using a pin punch and hammer, stake the cap.

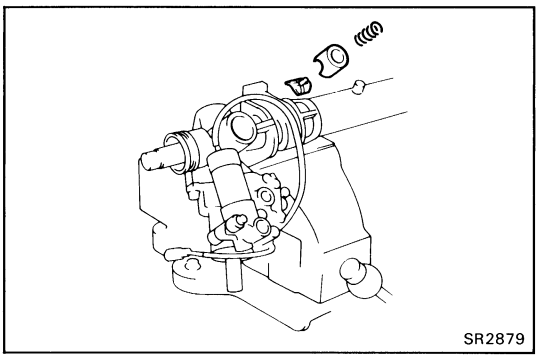

11. INSTALL RACK GUIDE SEAT, RACK GUIDE AND RACK GUIDE SPRING

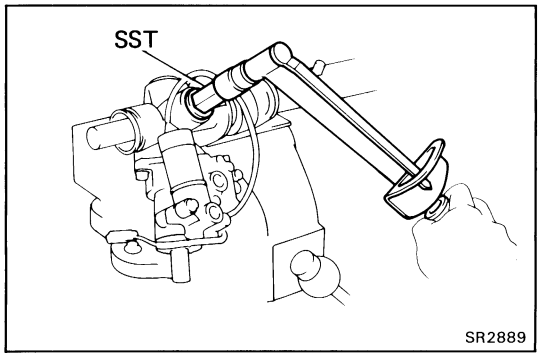

12. ADJUST TOTAL PRELOAD

(a) Apply sealant to 2 or 3 threads of the spring cap.

Sealant: Part No. 08833-00080, THREE BOND 1344, LOCTITE 242 or equivalent

(b) Using SST, install and torque the spring cap.

SST 09612-24014 (09612-10022)

Torque: 250 kg-cm (18 ft-lb, 25 N·m)

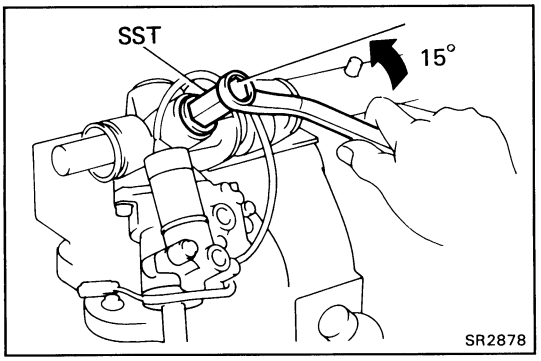

(c) Using SST, return the rack guide spring cap 15°.

SST 09612-24014 (09612-10022)

(d) Turn the control valve shaft right and left one or two times.

(e) Loosen the spring cap until the rack guide compression spring is not functioning.

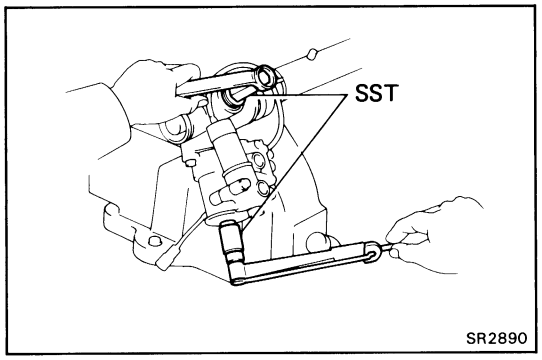

(f) Using SST and a torque meter, tighten the rack guide spring cap until the preload is within specification.

SST 09612-24014 (09612-10022), 09616-00010

Preload (turning): 9 — 12 kg-cm (7.8 — 10.4 in.-lb, 0.9 — 1.2 N·m)

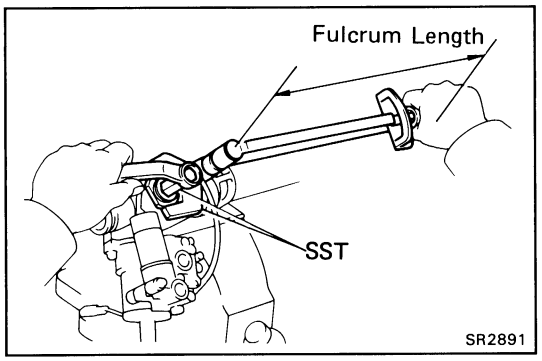

13. INSTALL RACK GUIDE SPRING CAP LOCK NUT

(a) Apply sealant to 2 or 3 threads of the lock nut.

Sealant: Part No.08833-00080, THREE BOND 1344, LOCTITE 242 or equivalent

(b) Using SST, install and torque the lock nut.

SST 09612-24014 (09612-10022, 09617-24020)

Torque: 570 kg-cm (41 ft-lb, 56 N·m)

HINT: Use a torque wrench with a fulcrum length of 340 mm (13.39 in.).

(c) Recheck the total preload.

14. INSTALL DUST COVER

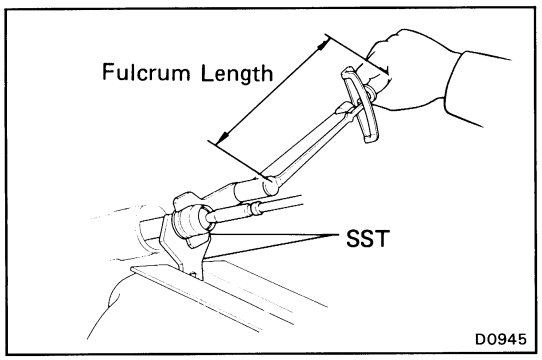

15. INSTALL CLAW WASHERS AND RACK ENDS

(a) Install new claw washers.

(b) Using SST, install and torque the rack ends.

SST 09612-24014 (09617-24011), 09617-14010

Torque: 940 kg-cm (68 ft-lb, 92 N·m)

HINT: Use a torque wrench with a fulcrum length of 340 mm (13.39 in.).

(c) Using a brass bar and hammer, stake the claw washers.

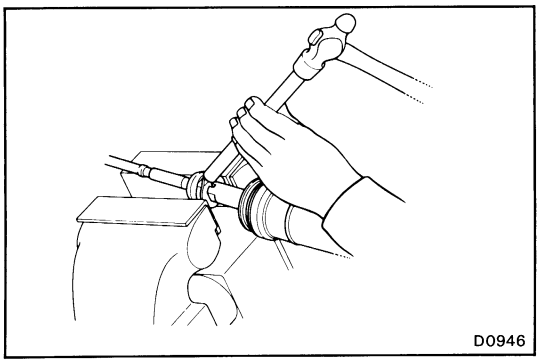

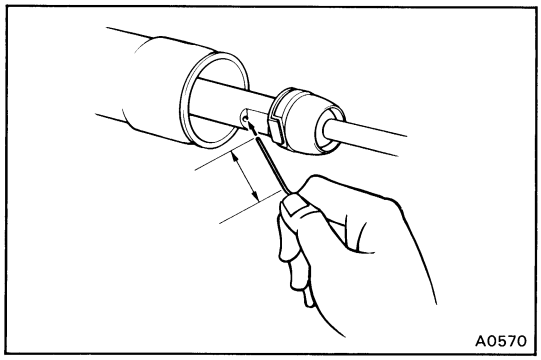

16. INSTALL RACK BOOTS, CLAMPS AND CLIPS

(a) Insure that the tube hole is not clogged with grease.

HINT: If the tube hole is clogged, the pressure inside the boot will change after it is assembled and the steering wheel turned.

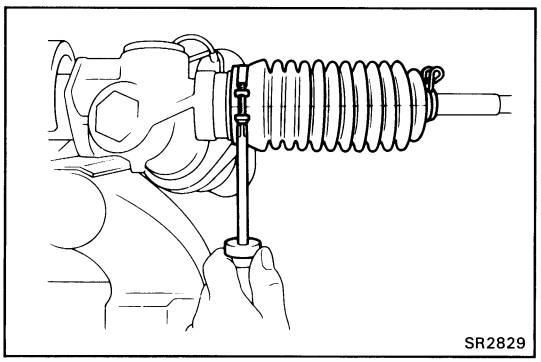

(b) Install the boots.

HINT: Be careful not to damage or twist the boots.

(c) Install the clamps.

(d) Install the clips with the ends facing outward.

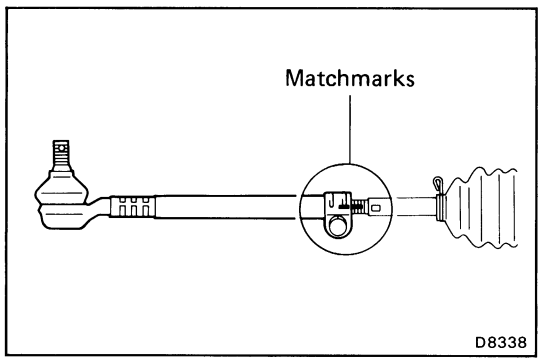

17. INSTALL TIE ROD ENDS

Screw the tie rod ends onto the rack ends until the matchmarks are aligned.

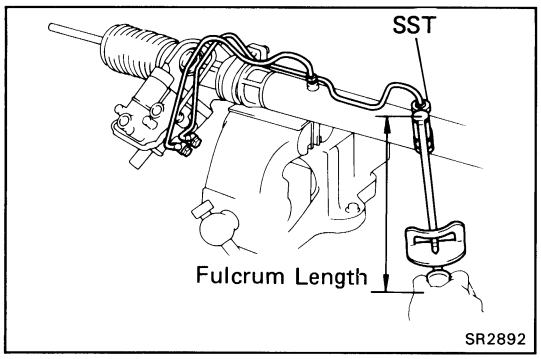

18. INSTALL RIGHT AND LEFT TURN PRESSURE TUBES

(a) Install two new union seats.

(b) Using SST, tighten the nuts.

SST 09633-00020

Torque: 240 kg-cm (17 ft-lb, 24 N·m)

HINT: Use a torque wrench with a fulcrum length of 300 mm (11.81 in.).

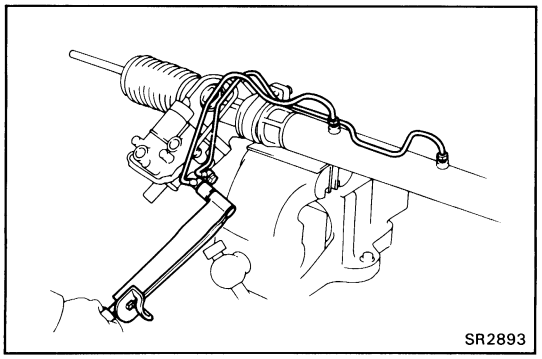

(c) Install the union bolts over the new gaskets and torque them.

Torque: 350 kg-cm (25 ft-lb, 34 N·m)

Progressive Power Steering (PPS)

ELECTRONIC CIRCUIT

Do not open the cover or the case of the ECU and various computer unless absolutely necessary. (If the IC terminals are touched, the IC may be destroyed by static electricity.)

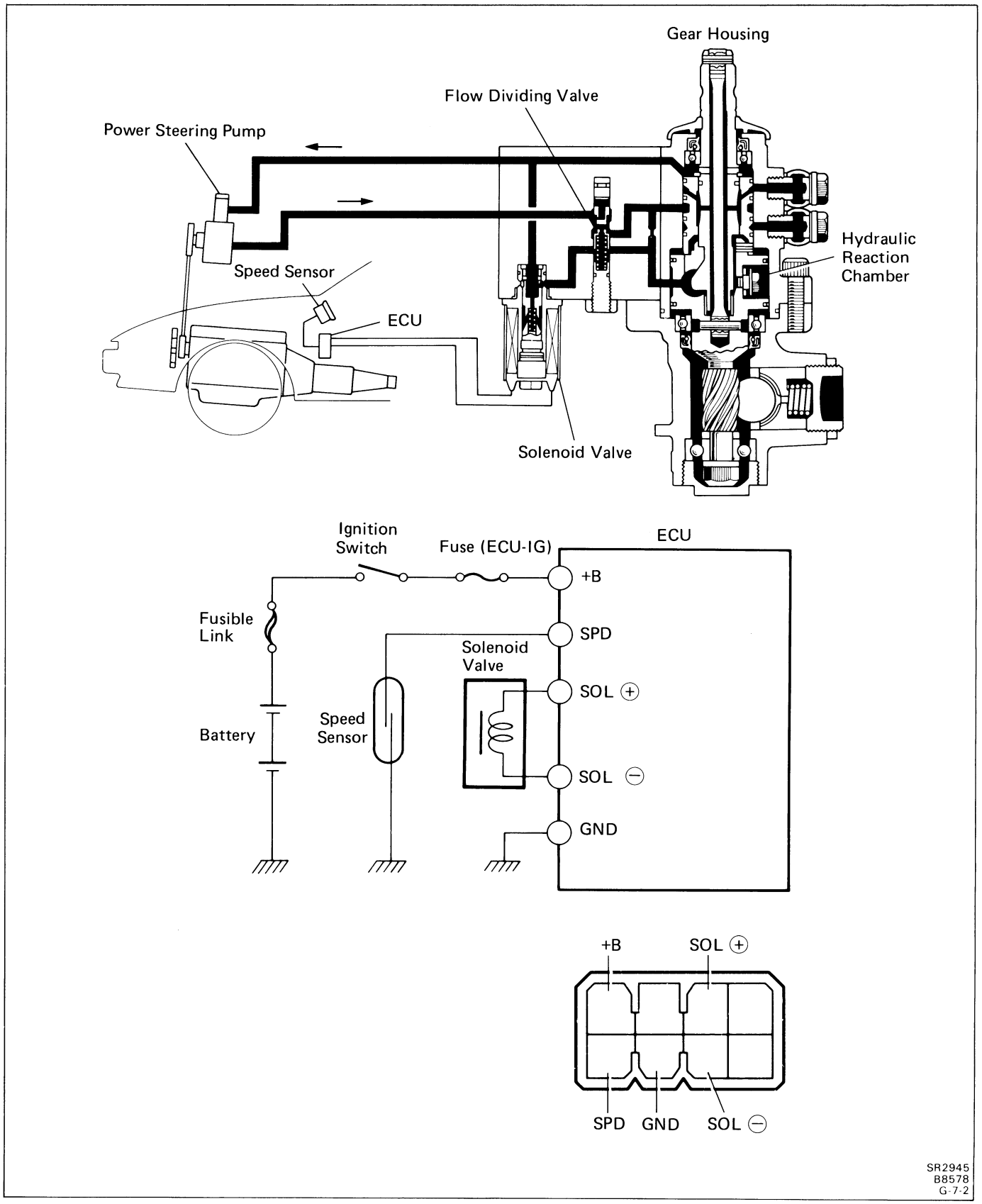

TROUBLESHOOTING

Trouble

- Hard steering at idle or low-speed driving.
- Steering too sensitive during high-speed driving.

Preliminary Check

- Check tire pressure.
- Check lubrication of suspension and steering linkage.
- Check front wheel alignment.
- Check steering system joint and suspension arm ball joint.
- Check for bent steering column.
- Check that all connectors are secure.
- Check PS pump fluid pressure. (See page SR-43)

Turn ignition switch on.

Is ECU-IG fuse normal?

No → Replace fuse. Is operation normal?

No → Short circuit in wire harness between fuse and ECU terminal +B.

Yes → Fuse faulty.

Yes

Disconnect the ECU connector.

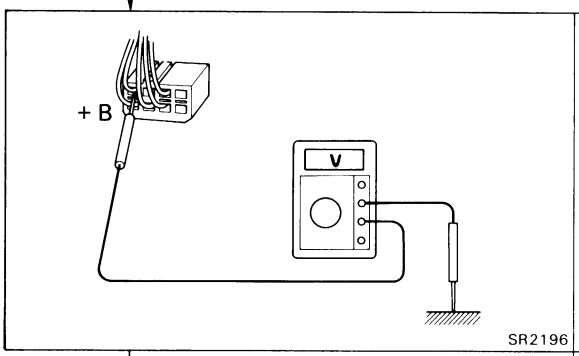

Check 1.
Check that there is the battery voltage between the ECU terminal +B and body ground.

Yes

No → Open circuit in wire harness between the fuse and ECU terminal +B.

CONTINUED ON NEXT PAGE

Yes CONTINUED FROM PREVIOUS PAGE

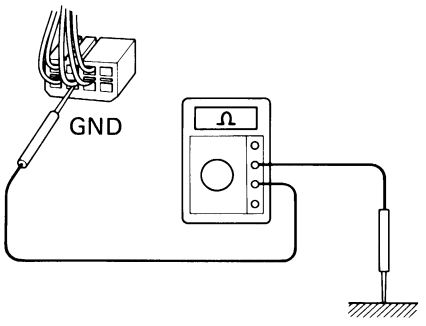

Check 2.
Check that there is continuity between the ECU terminal GND and body ground.

Yes

No

- Open circuit in wire harness between the ECU terminal GND and body ground.
- Body ground faulty.

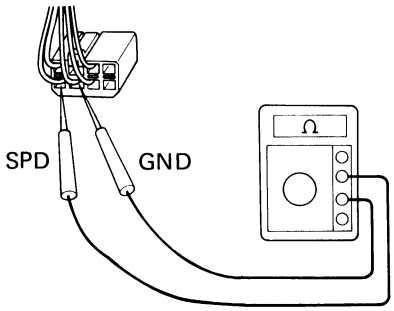

Check 3.
(a) Jack up the rear wheel on one side.
(b) Connect an ohmmeter between the ECU connector terminals SPD and GND.
(c) Spin the rear wheel and check that the meter needle deflects from 0 Ω to ∞ Ω.

Yes

No

- Open or short circuit in wire harness between the ECU terminal SPD and speed sensor.
- Speed sensor faulty (See page BE-84).

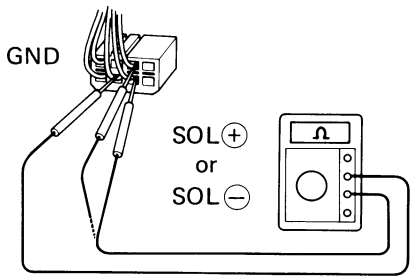

Check 4.
Check that there is no continuity between terminals SOL ⊕ or SOL ⊖ and GND.

Yes

No

- Short circuit in wire harness between the terminals SOL ⊕ and SOL ⊖.
- Solenoid valve faulty.

CONTINUED ON NEXT PAGE

Yes CONTINUED FROM PREVIOUS PAGE

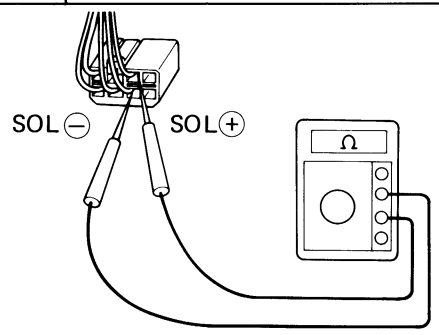

Check 5.
Measure the resistance between terminals SOL ⊕ and SOL ⊖.
Standard resistance: 6.0 – 11.0 Ω

Yes

No

- Open circuit in wire harness between the terminals SOL ⊕ and SOL ⊖.
- Solenoid valve faulty.

Check 6.
Inspect ECU.

Bad → Replace ECU.

ELECTRONIC CONTROL SYSTEM

Solenoid Valve

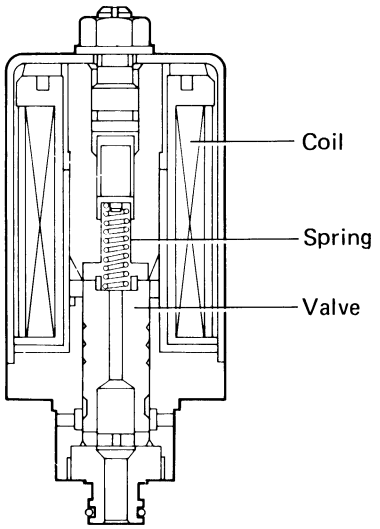

SR0564

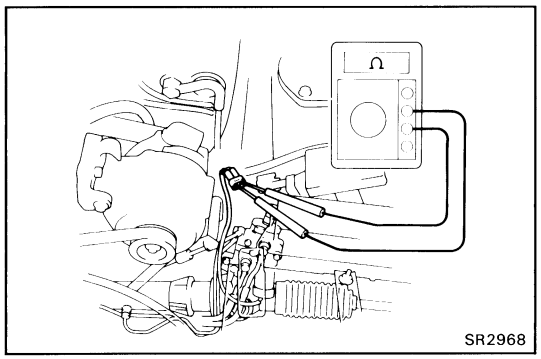

SR2968

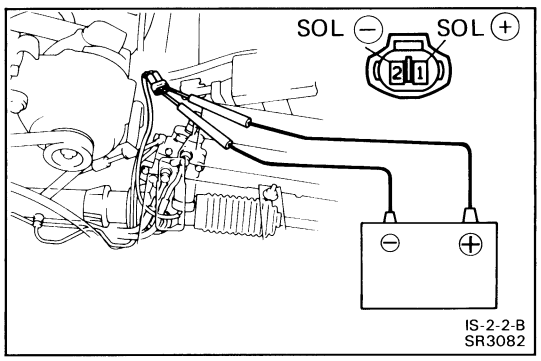

IS-2-2-B
SR3082

ON-VEHICLE INSPECTION

1. DISCONNECT WIRING CONNECTOR

2. MEASURE RESISTANCE

Measure the resistance between SOL ⊕ and SOL ⊖.

Resistance: 6.0 — 11.0 Ω

3. CHECK SOLENOID OPERATION

(a) Connect the battery positive terminal to the solenoid terminal SOL ⊕.

(b) Connect the battery negative terminal to the solenoid terminal SOL ⊖.

(c) Check that the solenoid is clicked.

If faulty, replace the pressure control valve with the solenoid valve.

NOTICE:

- **Do not apply voltage for more than 30 seconds to avoid burning out the solenoid.**
- **If repeating this step, wait until the solenoid cools down enough that it can be touched by hand.**

4. CONNECT WIRING CONNECTOR

Power Steering ECU

INSPECTION OF ECU

1. **JACK UP VEHICLE AND SUPPORT IT ON STANDS**

2. **REMOVE GLOVE BOX**

   HINT: Do not disconnect the ECU connector.

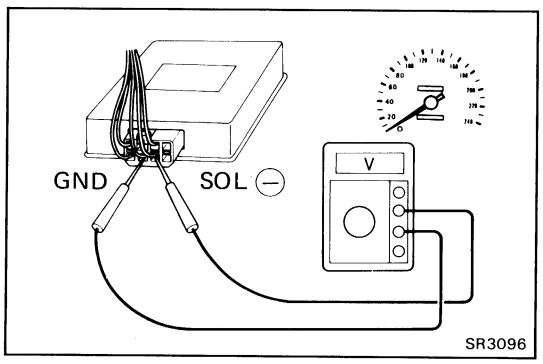

3. **START ENGINE**

4. **MEASURE VOLTAGE OF ECU**

   (a) Using a voltmeter, measure the voltage between ECU terminals SOL ⊖ and GND while the engine is idling.

   Standard voltage: 0.32 — 0.44 V

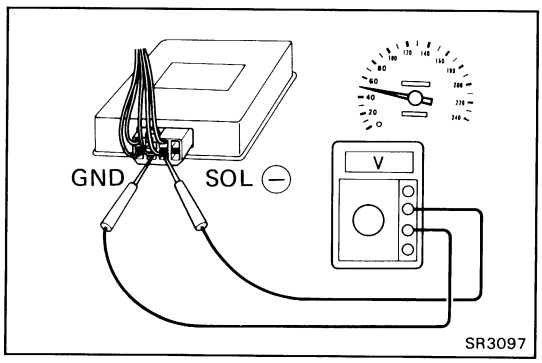

   (b) Place the transmission in gear and while running at about 50 km/h (31 mph), measure the voltage between ECU terminals SOL ⊖ and GND.

   Standard voltage: Voltage measured in (a) above, minus 0.09 — 0.23 V

   If no voltage, try another ECU.

5. **INSTALL GLOVE BOX**

6. **LOWER VEHICLE**

SRS AIRBAG

	Page
GENERAL DESCRIPTION	AB-2
DESCRIPTION	AB-5
OPERATION	AB-7
INSPECTION ITEMS AND REPLACEMENT REQUIREMENTS	AB-11
REMOVAL AND INSTALLATION OF COMPONENT PARTS	AB-15
Steering Wheel Pad and Spiral Cable	AB-15
Front Airbag Sensor	AB-17
Center Airbag Sensor Assembly	AB-19
REPLACEMENT OF REPAIR WIRE FOR FRONT AIRBAG SENSOR	AB-21
TROUBLESHOOTING	AB-24
DISPOSAL OF STEERING WHEEL PAD (WITH AIRBAG)	AB-82
DISPOSAL OF CENTER AIRBAG SENSOR ASSEMBLY	AB-89

GENERAL DESCRIPTION

The 1990 TOYOTA SUPRA for USA specifications is equipped with an SRS (Supplemental Restraint System) airbag.
Failure to carry out service operations in the correct sequence could cause the airbag system to unexpectedly deploy during servicing, possibly leading to a serious accident.
Further, if a mistake is made in servicing the airbag system, it is possible the airbag may fail to operate when required.
Before performing servicing (including removal or installation of parts, inspection or replacement), be sure to read the following items carefully, then follow the correct procedure described in the repair manual.

1. Malfunction symptoms of the airbag system are difficult to confirm, so the diagnostic codes become the most important source of information when troubleshooting.
   When troubleshooting the airbag system, always inspect the diagnostic codes before disconnecting the battery (See page AB-24).

2. **Work must be started after approx. 20 seconds or longer from the time the ignition switch is turned to the LOCK position and the negative (—) terminal cable is disconnected from the battery. (The airbag system is equipped with a back-up power source so that if work is started within 20 seconds of disconnecting the negative (—) terminal cable of the battery, the airbag may be deployed.)**
   When the negative (—) terminal cable is disconnected from the battery, memory of the clock and audio systems will be cancelled. So before starting work, make a record of the contents memorized by each memory system. Then when work is finished, reset the clock and audio systems as before.
   To avoid erasing the memory of each memory system, never use a back-up power supply from outside the vehicle.

3. Even in cases of a minor collision where the airbag does not deploy, the front airbag sensors and the steering wheel pad should be inspected (See page AB-11).

4. Never use airbag parts from another vehicle. When replacing parts, replace them with new parts.

5. Before repairs, remove the airbag sensors if shocks are likely to be applied to the sensors during repairs.

6. The center airbag sensor assembly contains mercury.
   After performing replacement, do not destroy the old part. When scrapping the vehicle or replacing the center airbag sensor assembly itself, remove the center airbag sensor assembly and dispose of it as toxic waste.

7. Never disassemble and repair the front airbag sensors, center airbag sensor assembly or steering wheel pad in order to reuse it.

8. If the front airbag sensors, center airbag sensor assembly or steering wheel pad have been dropped, or if there are cracks, dents or other defects in the case, bracket or connector, replace them with new ones.

9. Do not expose the front airbag sensors, center airbag sensor assembly or steering wheel pad directly to hot air or flames.

10. Use a volt/ohmmeter with high impedance (10 kΩ/V minimum) for troubleshooting of the electrical circuit.

11. Information labels are attached to the periphery of the airbag components. Follow the notices.

12. After work on the airbag system is completed, perform the airbag warning light check (See page AB-29).

FRONT AIRBAG SENSOR

1. Never reuse the front airbag sensors involved in a collision when the airbag has deployed. (Replace both the left and right airbag sensors.)

2. Install the front airbag sensor with the arrow on the sensor facing toward the front of the vehicle.

3. The front airbag sensor set bolts have been anti-rust treated.
   When the sensor is removed, always replace the set bolts with new ones.

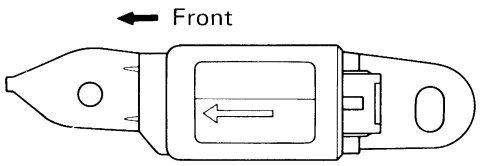

AB0232

4. The front airbag sensor is equipped with an electrical connection check mechanism. Be sure to lock this mechanism securely when connecting the connector. If the connector is not securely locked, a malfunction code will be detected by the diagnosis system (See page AB-9).

SPIRAL CABLE (in COMBINATION SWITCH)

The steering wheel must be fitted correctly to the steering column with the spiral cable at the neutral position, otherwise cable disconnection and other troubles may result. Refer to page AB-16 of this manual concerning correct steering wheel installation.

STEERING WHEEL PAD (with AIRBAG)

1. **When removing the steering wheel pad or handling a new steering wheel pad, it should be placed with the pad top surface facing up.**

   In this case, the twin-lock type connector lock lever should be in the locked state and care should be taken to place it so the connector will not be damaged. And do not store a steering wheel pad on top of another one. (Storing the pad with its metallic surface up may lead to a serious accident if the airbag inflates for some reason.)

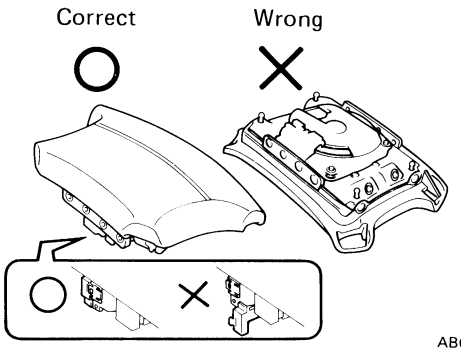

AB0128

2. **Never measure the resistance of the airbag squib.**
   (This may cause the airbag to deploy, which is very dangerous.)

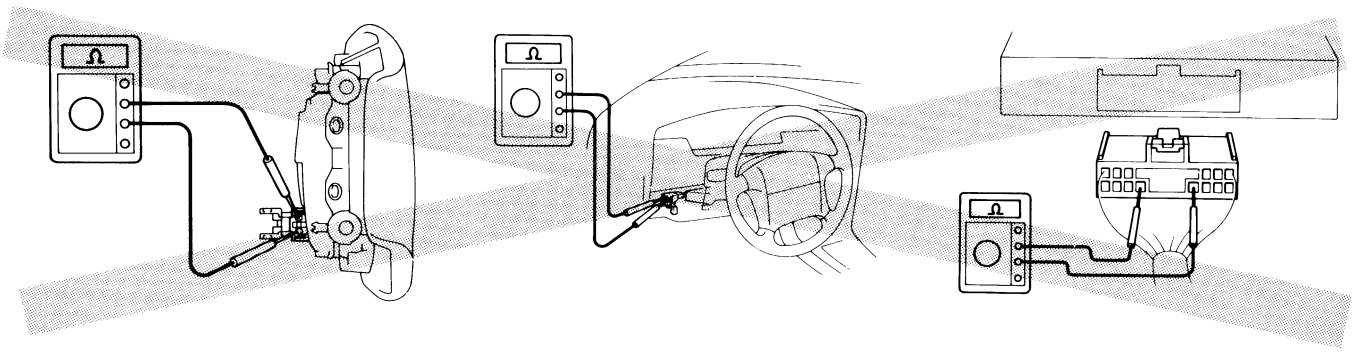

AB0014 AB0181 AB0110

3. Grease should not be applied to the steering wheel pad and the pad should not be cleaned with detergents of any kind.

4. Store the steering wheel pad where the ambient temperature remains below 93°C (200°F), without high humidity and away from electrical noise.

5. When using electric welding, first disconnect the airbag connector (yellow color and 2 pins) under the steering column near the combination switch connector before starting work.

6. When disposing of a vehicle or the steering wheel pad alone, the airbag should be deployed using an SST before disposal (See page AB-82). Perform the operation in a place away from electrical noise.

CENTER AIRBAG SENSOR ASSEMBLY

The connector to the center airbag sensor assembly should be connected or disconnected with the sensor mounted on the floor. If the connector is connected or disconnected while the center airbag sensor assembly is not mounted to the floor, it could cause undesired ignition of the airbag system.

WIRE HARNESS AND CONNECTOR

The airbag system wire harness is integrated with the cowl wire harness assembly. The wires for the airbag wire harness are encased in a yellow corrugated tube. All the connectors for the system are also a standard yellow color. If the airbag system wire harness becomes disconnected or the connector becomes broken due to an accident, etc., repair or replace it as shown on page AB-21.

DESCRIPTION

The SRS (Supplemental Restraint System) airbag, together with the seat belt, is designed to help protect the driver. In a collision, the airbag sensors detect the shock, and if the front-to-rear shock is greater than a specified value, an airbag stored in the steering wheel pad is inflated instantaneously to help reduce the shock to the driver.

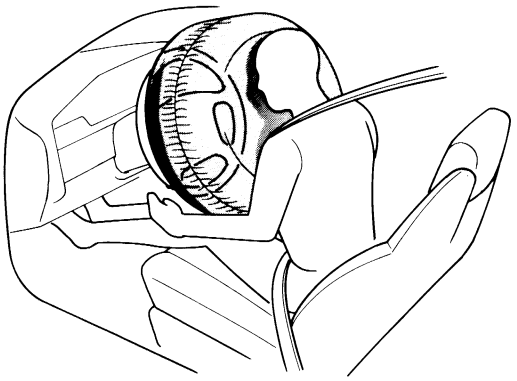

AB0215

LOCATION OF COMPONENTS

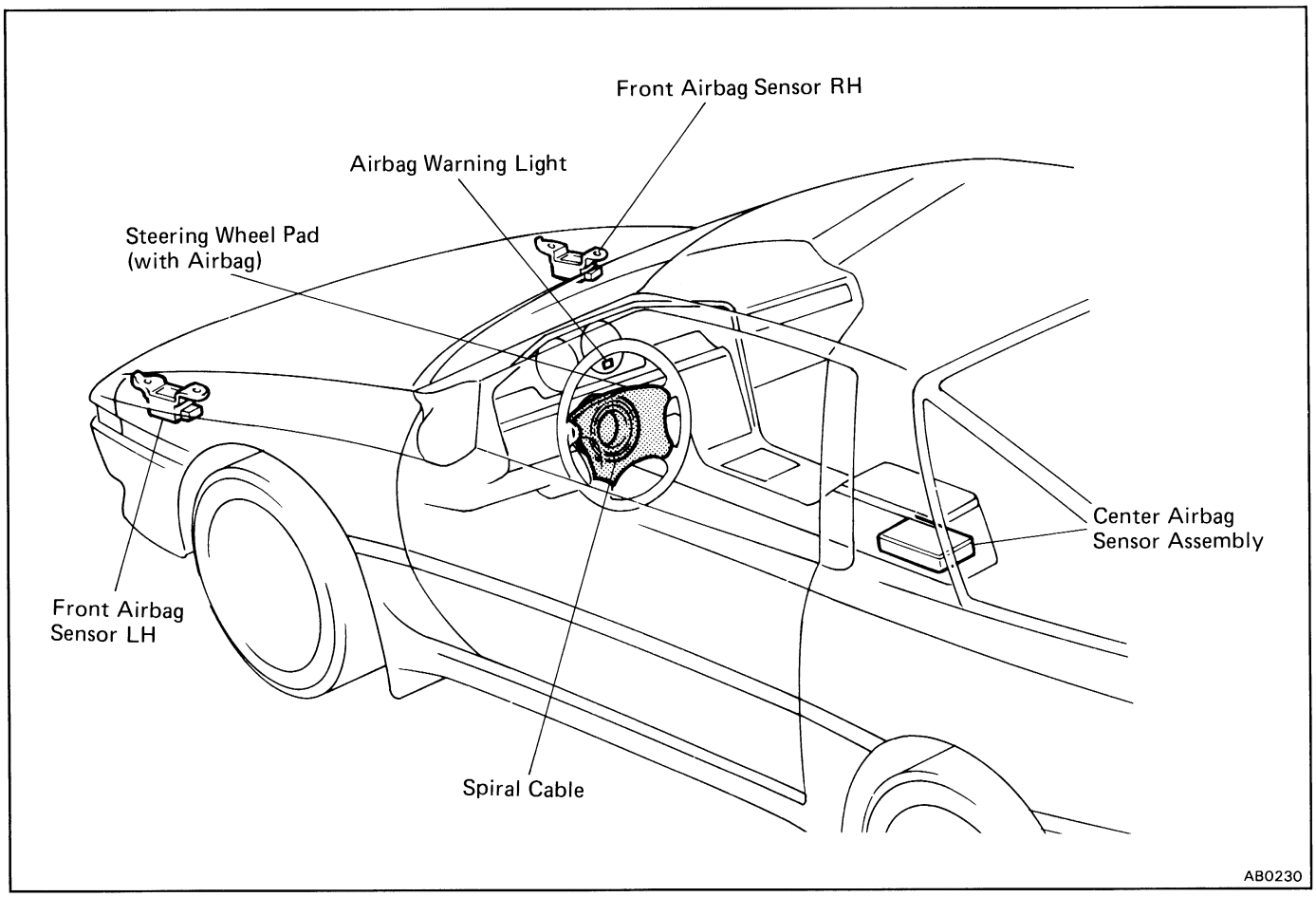

AB0230

WIRING DIAGRAM

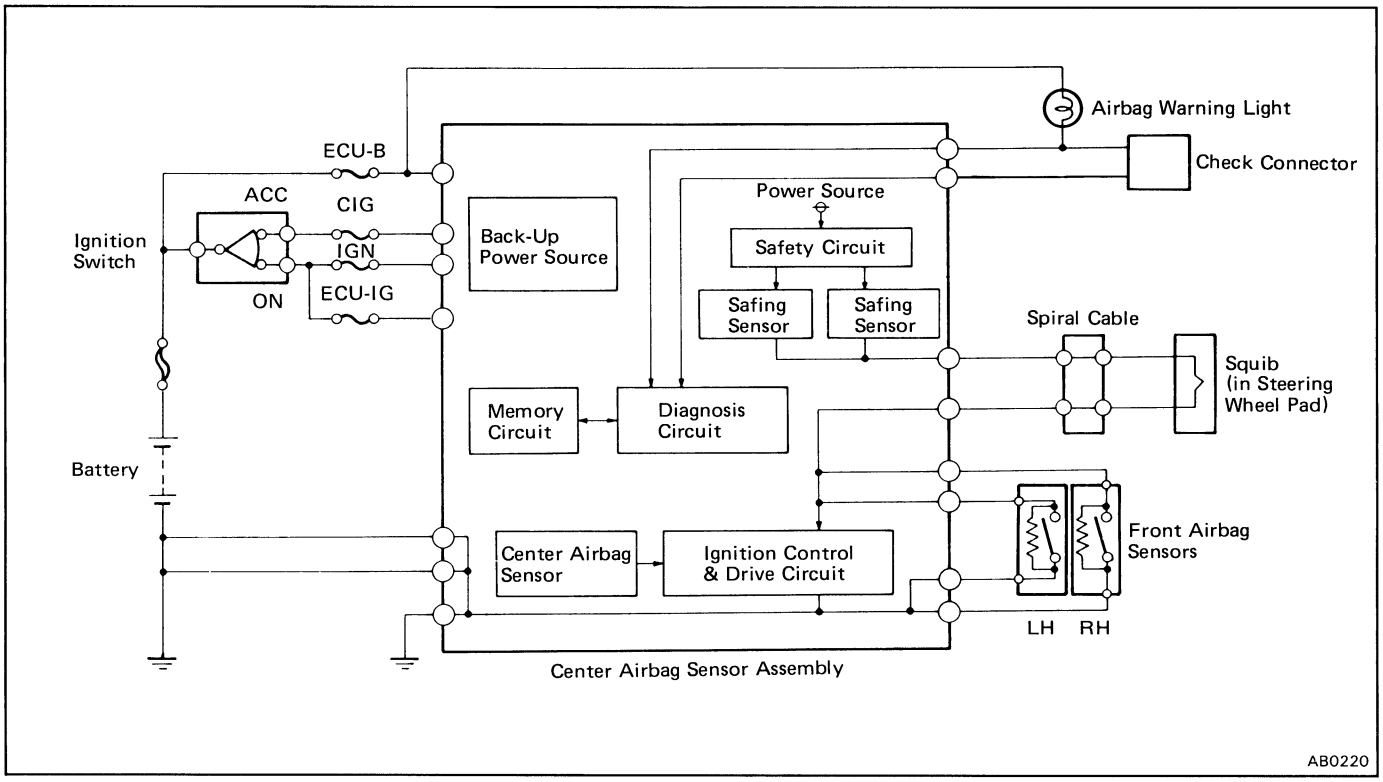

CENTER AIRBAG SENSOR ASSEMBLY CONNECTOR

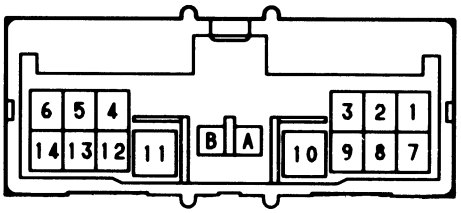

AB0050

No.	Symbol	Terminal Name	No.	Symbol	Terminal Name
1	IG_1	Power Source (ECU-IG Fuse)	8	E_2	Ground
2	−SR	RH Front Airbag Sensor ⊖	9	LA	Airbag Warning Light
3	+SR	RH Front Airbag Sensor ⊕	10	D^-	Squib ⊖
4	+SL	LH Front Airbag Sensor ⊕	11	D^+	Squib ⊕
5	−SL	LH Front Airbag Sensor ⊖	12	Tc	Diagnosis
6	+B	Battery (ECU-B Fuse)	13	E_1	Ground
7	IG_2	Power Source (IGN Fuse)	14	Acc	Power Sourse (CIG Fuse)
A	—	Electrical Connection Check Mechanism	B	—	Electrical Connection Check Mechanism

OPERATION

FUNCTION OF COMPONENTS

1. FRONT AIRBAG SENSOR

A front airbag sensor is mounted inside each of the front fenders. The sensor unit is a mechanical type. When the sensor detects deceleration force above a predetermined limit in a collision, the contacts in the sensor make contact, sending a signal to the center airbag sensor assembly. The sensor cannot be disassembled.

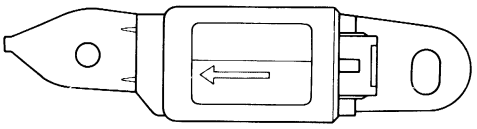

AB0232

2. SPIRAL CABLE (in COMBINATION SWITCH)

A spiral cable is used as an electrical joint from the vehicle body side to the steering wheel.

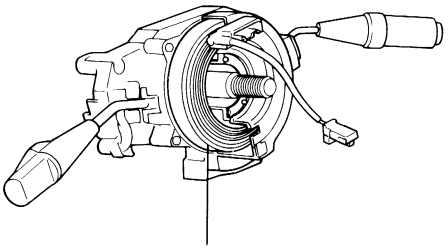

AB0216

3. STEERING WHEEL PAD (with AIRBAG)

The inflater and bag of the airbag system are stored in the steering wheel pad and cannot be disassembled.
The inflater contains a squib, igniter charge, gas generant, etc., and inflates the bag in case of a frontal collision.

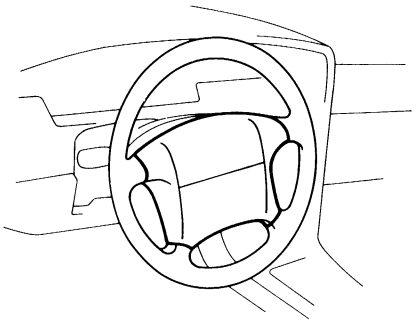

AB0150

4. AIRBAG WARNING LIGHT

The airbag warning light is located on the combination meter. It goes on to alert the driver of trouble in the system when a malfunction is detected in the center airbag sensor assembly self-diagnosis. In normal operating condition when the ignition switch is turned to the ACC or ON position, the light goes on for about 6 seconds and then goes off.

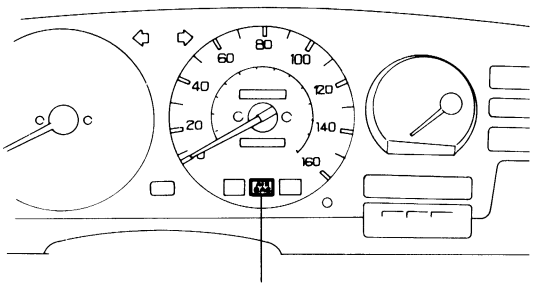

AB0217

5. CENTER AIRBAG SENSOR ASSEMBLY

The center airbag sensor assembly is mounted on the floor inside the console box. The center airbag sensor assembly consists of a center airbag sensor, safing sensors, ignition control and drive circuit, diagnosis circuit, etc. It receives signals from the airbag sensors, judges whether the airbag must be activated or not and diagnoses system malfunctions.

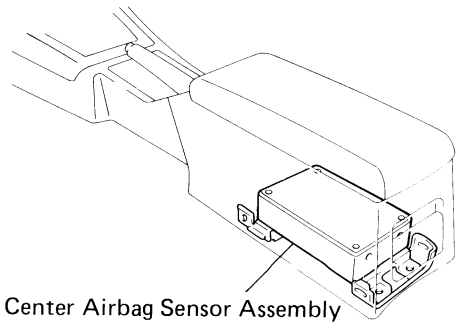

AB0182

6. AIRBAG CONNECTORS

All connectors in the airbag system are colored yellow to distinguish them from other connectors. Connectors having special functions and specifically designed for airbags are used in the locations shown below to ensure high reliability. These connectors use durable gold-plated terminals.

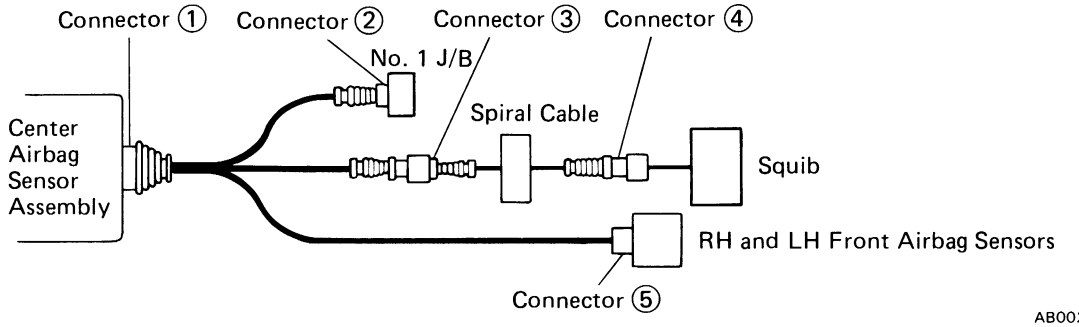

No.	Item	Application
(1)	Terminal Twin-Lock Mechanism	Connectors ①, ②, ③, ④, ⑤
(2)	Airbag Activation Prevention Mechanism	Connectors ①, ③, ④
(3)	Electrical Connection Check Mechanism	Connectors ①, ⑤
(4)	Connector Twin-Lock Mechanism	Connectors ③, ④

(1) Terminal Twin-Lock Mechanism

Each connector has a two-piece construction consisting of a housing and a spacer. This design secures the locking of the terminal by two locking devices (the spacer and the lance) to prevent terminals from coming out.

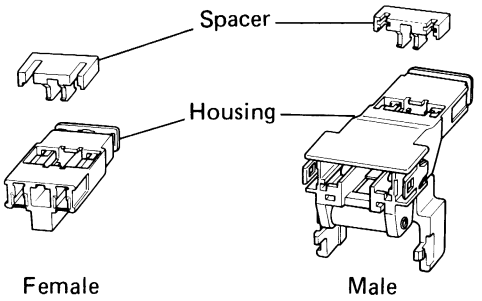

AB0076 AB0077

(2) Airbag Activation Prevention Mechanism

Each connector contains a short spring plate. When the connector is disconnected, the short spring plate automatically connects the power source and grounding terminals of the squib.

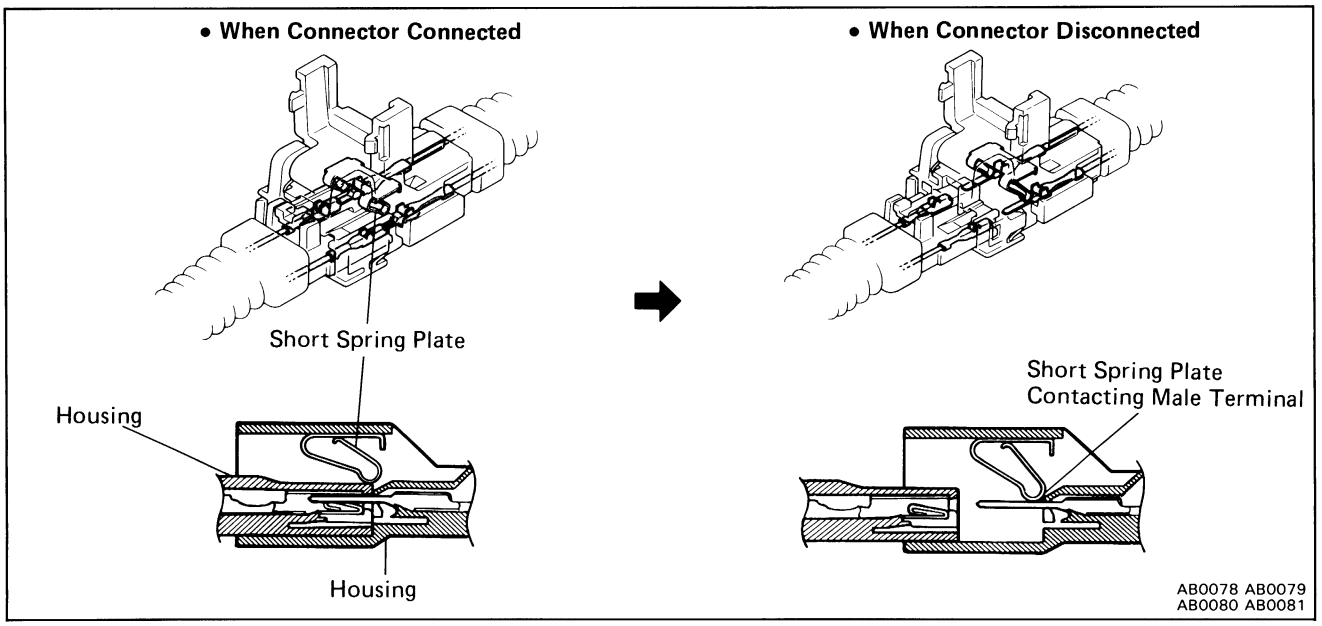

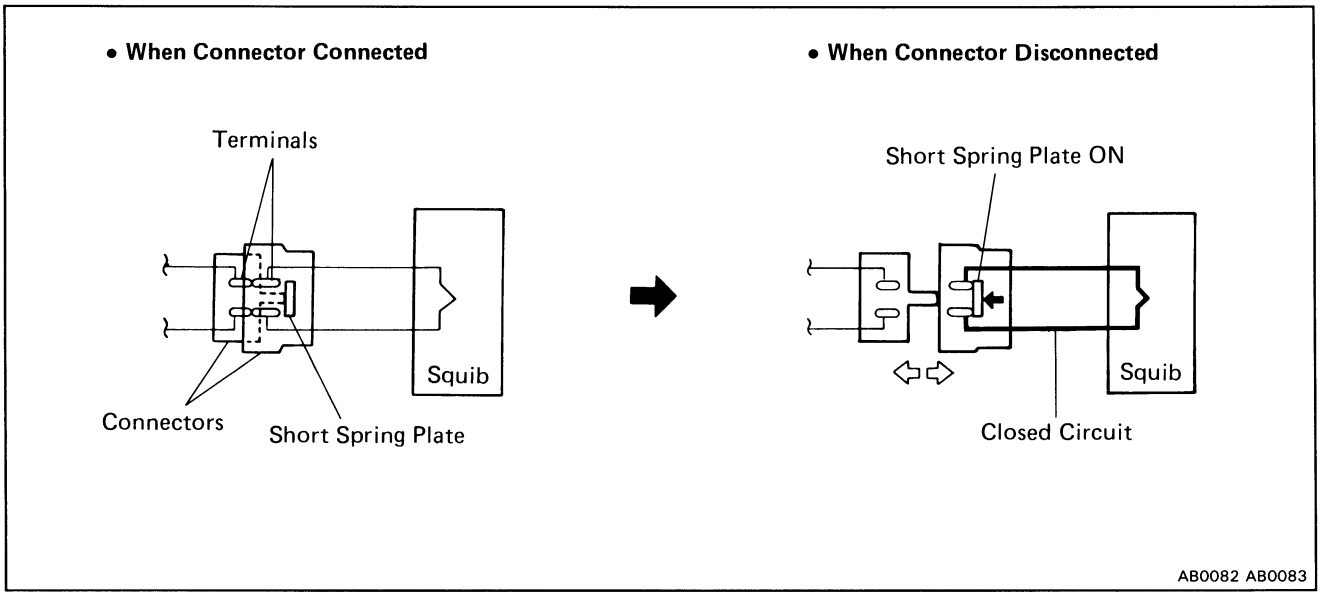

HINT: The illustration shows connectors ③ and ④. Connector ① has a short spring plate on the female terminal side, but the operating principle is the same.

(3) Electrical Connection Check Mechanism

This mechanism is designed to electrically check if connectors are connected correctly and completely.

The electrical connection check mechanism is designed so that the connection detection pin connects with the diagnosis terminals when the connector housing lock is in the locked condition.

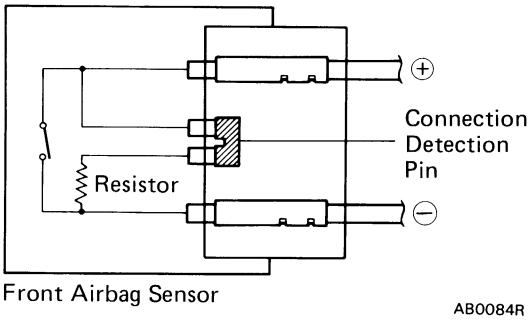

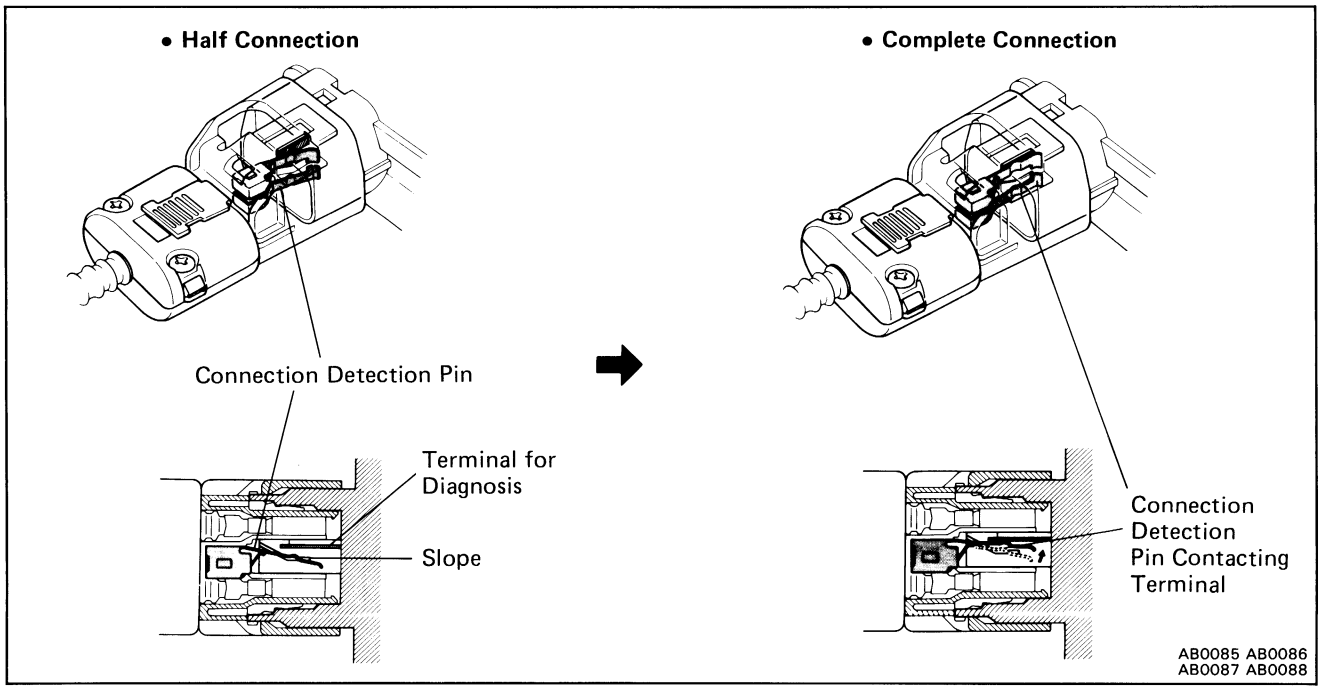

HINT: The illustration shows connector ⑤. Connector ① also has the same operating principle.

(4) Connector Twin-Lock Mechanism

With this mechanism connectors (male and female connectors) are locked by two locking devices to increase connection reliability. If the primary lock is incomplete, ribs interfere and prevent the secondary lock.

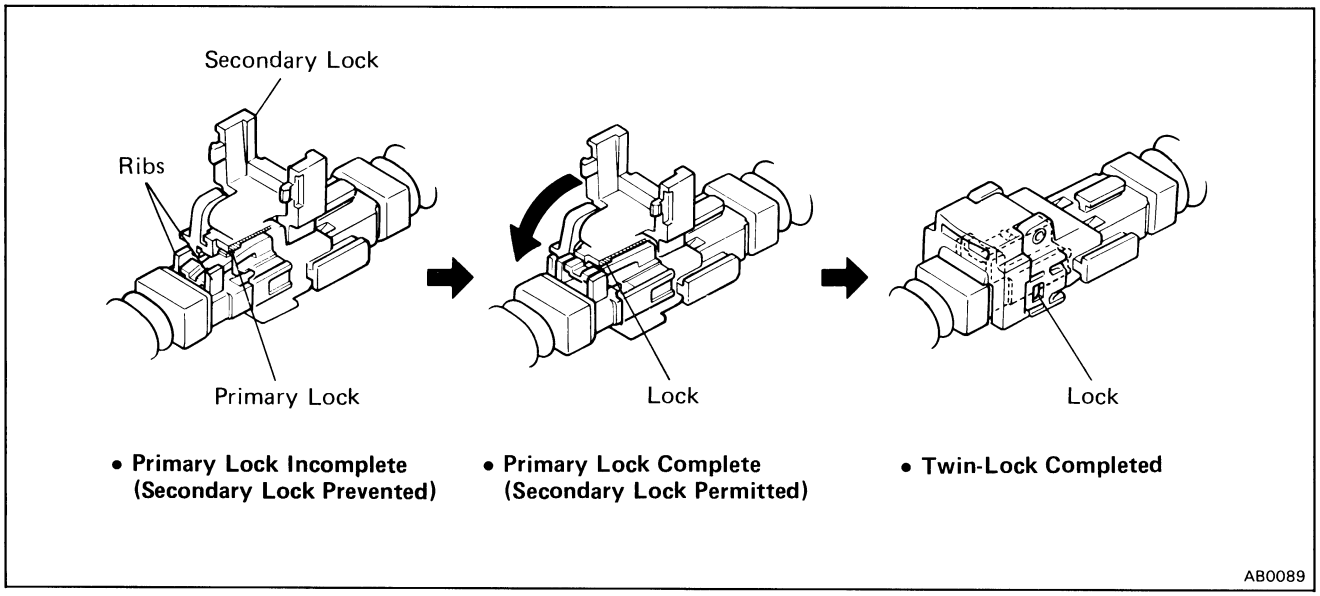

When the vehicle is involved in a frontal collision in the hatched area (Fig. 1) and the shock is larger than a predetermined level, the airbag is activated automatically. Safing sensors are designed to go on at a smaller deceleration rate than the front and center airbag sensors. As illustrated in Fig. 2 below, ignition is caused when current flows to the squib, which happens when a safing sensor and a front airbag sensor and/or the center airbag sensor go on simultaneously.

When a deceleration force acts on the sensors, it causes the squib to ignite. Gas is then generated, increasing the pressure inside the bag rapidly. The inflated bag breaks open the steering wheel pad. Bag inflation then ends, and the gas is discharged through discharge holes provided behind the bag. The bag becomes deflated as a result.

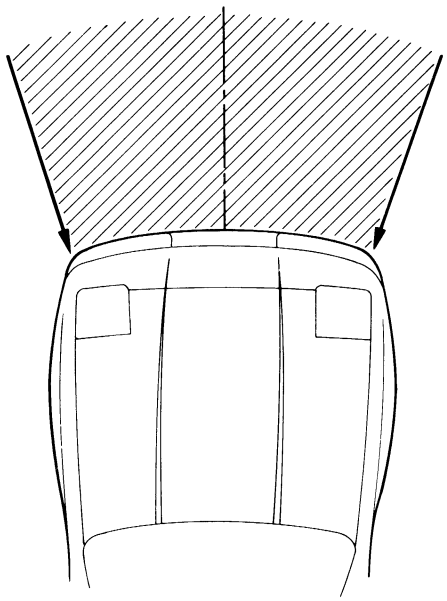

Fig. 1

AB0219

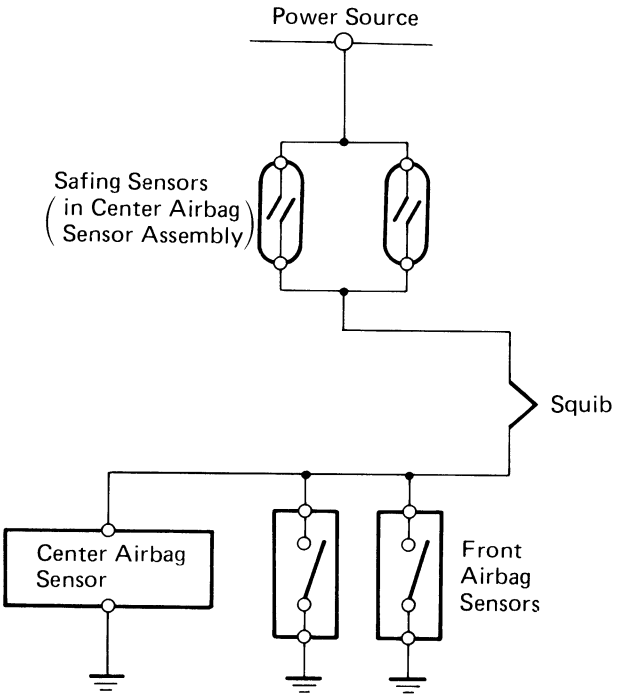

Fig. 2

AB0051

INSPECTION ITEMS AND REPLACEMENT REQUIREMENTS

If a vehicle is brought in for an airbag system inspection, or if a vehicle which has been involved in a collision is inspected, perform the inspection in accordance with the following procedure. If any problems are discovered, replace the affected part with a new one.

Steering Wheel Pad (with Airbag), Steering Wheel and Spiral Cable

INSPECTION ITEMS

1. VEHICLES NOT INVOLVED IN A COLLISION

(a) Perform a diagnostic system check (See page AB-29).

(b) Perform a visual check which includes the following items with the steering wheel pad (with airbag) installed in the vehicle.

- Check for cuts, minute cracks or marked discoloration of the steering wheel pad top surface and grooved portion.

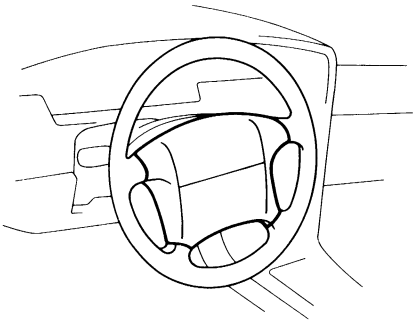

AB0150

2. VEHICLES INVOLVED IN A COLLISION

(IF THE AIRBAG IS NOT DEPLOYED)

(a) Perform a diagnostic system check (See page AB-29).

(b) Perform a visual check which includes the following items with the steering wheel pad (with airbag) removed from the vehicle.

- Check for cuts or cracks in, or marked discoloration of the steering wheel pad top surface and grooved portion.
- Check for cuts and cracks in, or chipping of connectors and wire harnesses.
- Check for deformation of the horn button contact plate of the steering wheel.

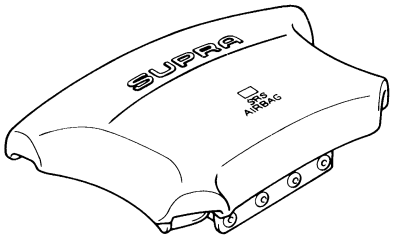

AB0212

HINT:

- If the horn button contact plate of the steering wheel is deformed, never repair it. Always replace the steering wheel assembly with a new one.
- There should be no interference between the steering wheel pad and the steering wheel, and the clearance should be uniform all the way around when the new steering wheel pad is installed on the steering wheel.

CAUTION: For removal and installation of the steering wheel pad, see page AB-15, ''REMOVAL AND INSTALLATION'' and be sure to follow the correct procedure.

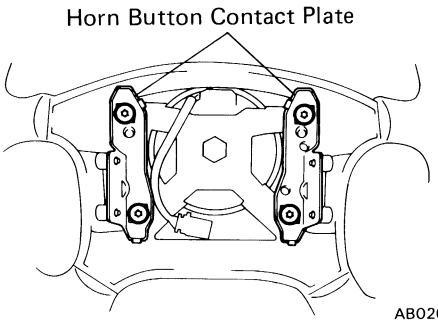

AB0204

(IF THE AIRBAG IS DEPLOYED)

(a) Perform a diagnostic system check (See page AB-29).

(b) Perform a visual check which includes the following items with the steering wheel pad (with airbag) removed from the vehicle.

- Check for deformation of the horn button contact plate of the steering wheel.
- Check for damage to the spiral cable connector and wire harness.

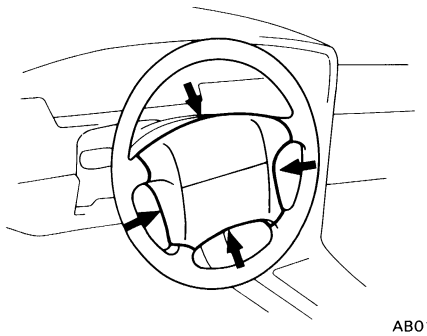

AB0150

HINT:
- If the horn button contact plate of the steering wheel is deformed, never repair it. Always replace the steering wheel assembly with a new one.
- There should be no interference between the steering wheel pad and the steering wheel, and the clearance should be uniform all the way around when the new steering wheel pad is installed on the steering wheel.

REPLACEMENT REQUIREMENTS

In the following cases, replace the steering wheel pad, steering wheel or spiral cable.

CAUTION: For replacement of the steering wheel pad, see page AB-15, "REMOVAL AND INSTALLATION" and be sure to follow the correct procedure.

- If the airbag has been deployed.
- If the steering wheel pad or spiral cable has been found to be faulty in troubleshooting.
- If the steering wheel pad, steering wheel or spiral cable has been found to be faulty during the check in item **1**.-(b) or **2**.-(b).
- If the steering wheel pad has been dropped.

Front Airbag Sensor

INSPECTION ITEMS

1. VEHICLES NOT INVOLVED IN A COLLISION

- Perform a diagnostic system check (See page AB-29).

2. VEHICLES INVOLVED IN A COLLISION

(a) Perform a diagnostic system check (See page AB-29).

(b) If the front fender or its periphery of the car is damaged, perform visual check for damage to the front airbag sensor, which includes the following items even if the airbag was not deployed:

- Bracket deformation.
- Peeling of paint from the bracket.
- Cracks, dents or chips in the case.
- Cracks and dents in, or chipping and scratches of the connector.
- Peeling off of the label or damage to the series number.

Also refer to the body dimension drawings on page BO-64 and check the dimensions and mounting surface angle of the body area where the front airbag sensors are mounted. (The airbag may malfunction, or may not work, if the mounting angle or dimensions of the sensor mount are not correct.)

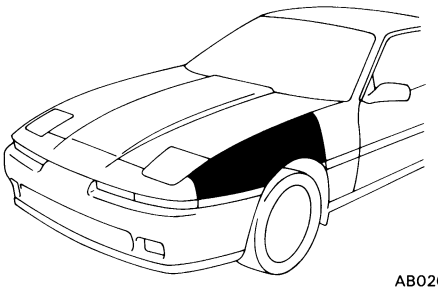

AB0205

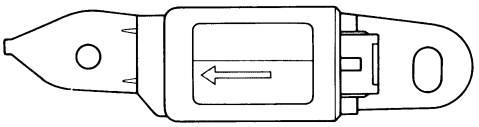

AB0232

REPLACEMENT REQUIREMENTS

In the following cases, replace the front airbag sensor.

NOTICE: For replacement of the front airbag sensor, see page AB-17, "REMOVAL AND INSTALLATION."

- If the airbag has been deployed in a collision.
  (Replace both the left and right airbag sensors.)
- If the front airbag sensor has been found to be faulty in troubleshooting.
- If the front airbag sensor has been found to be faulty during the check in item **2.**-(b).
- If the front airbag sensor has been dropped.

Center Airbag Sensor Assembly

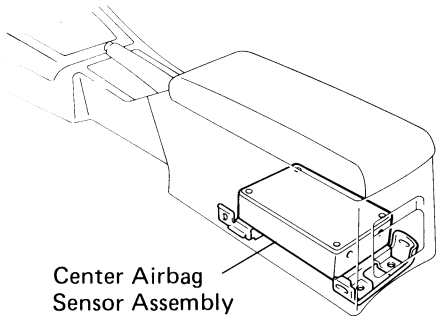

AB0182

INSPECTION ITEMS

1. VEHICLES NOT INVOLVED IN A COLLISION

- Perform a diagnostic system check (See page AB-29).

2. VEHICLES INVOLVED IN A COLLISION

(IF THE AIRBAG IS NOT DEPLOYED)

- Perform a diagnostic system check (See page AB-29).

(IF THE AIRBAG IS DEPLOYED)

(a) Perform a diagnostic system check (See page AB-29).

(b) Check the following items in the center airbag sensor assembly:

- Deformation of the bracket or case.
- Vinyl seat broken.
- Damage to the connector.

NOTICE: If the center airbag sensor assembly interferes with any other parts, perform a check after repairs.

REPLACEMENT REQUIREMENTS

In the following cases, replace the center airbag sensor assembly.

NOTICE: For replacement of the center airbag sensor assembly, see page AB-19, "REMOVAL AND INSTALLATION".

- If the center airbag sensor assembly has been found to be faulty in troubleshooting.
- If the center airbag sensor assembly has been found to be faulty during the check in item **2.**-(b).
- If the center airbag sensor assembly has been dropped.

Wire Harness and Connector

HINT: The airbag system wire harness is integrated with the cowl wire harness assembly. The wires for the airbag wire harness are encased in a yellow corrugated tube and all the connectors in the system are a standard yellow color.

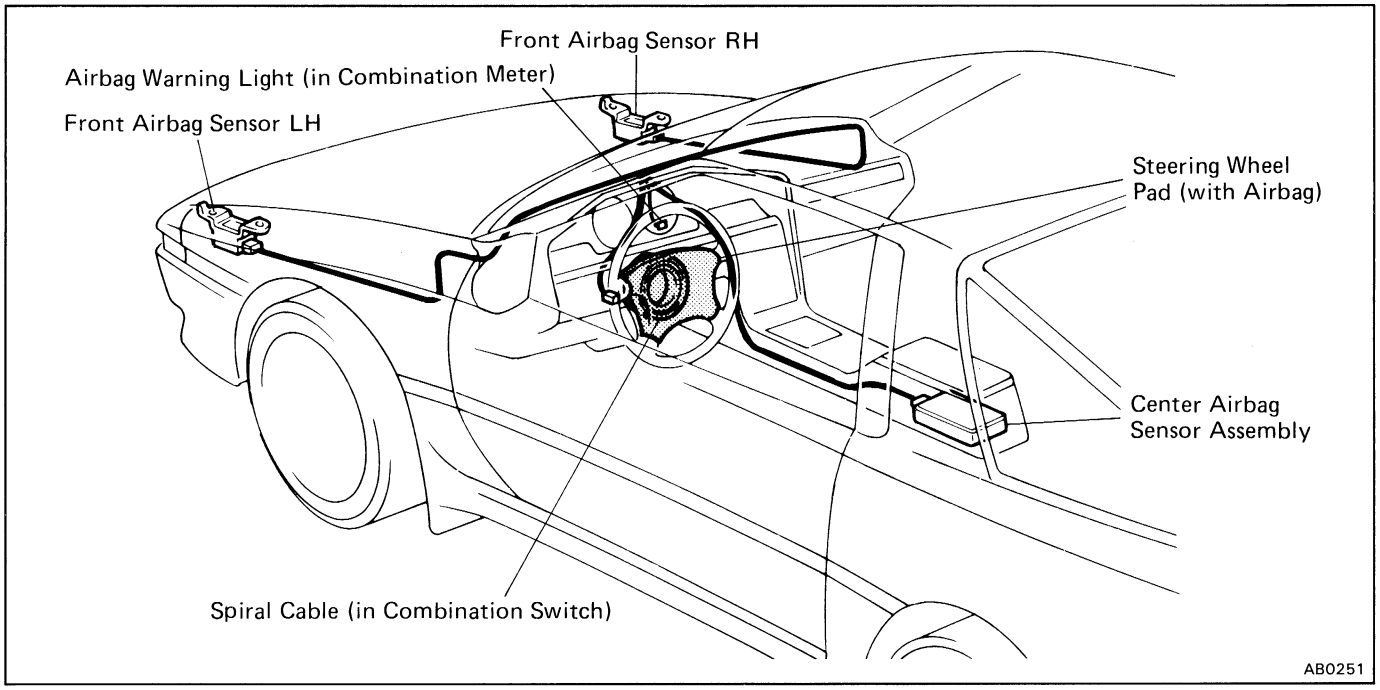

INSPECTION ITEMS

1. **VEHICLES NOT INVOLVED IN A COLLISION**
   - Perform a diagnostic system check (See page AB-29).
2. **VEHICLES INVOLVED IN A COLLISION**
   (a) Perform a diagnostic system check (See page AB-29).
   (b) If there is a break in any of the wires in the airbag system wire harness, or if conductors are exposed.
   (c) If the airbag system wire harness connectors are cracked or chipped.

REPLACEMENT REQUIREMENTS

In the following cases, replace the wire harness or connector.

- If any part of the airbag system wire harness or any connector has been found to be faulty in troubleshooting.
- If any part of the airbag system wire harness or any connector has been found to be faulty during the check in item **2.**-(b) or (c).

NOTICE: If the wire harness used in the airbag system is damaged, replace the whole wire harness assembly.
When the connector to the front airbag sensors can be repaired alone (when there is no damage to the wire harness), use the repair wire specially designed for the purpose (See page AB-21).

REMOVAL AND INSTALLATION OF COMPONENT PARTS

Steering Wheel Pad and Spiral Cable

Remove and install the parts as shown.

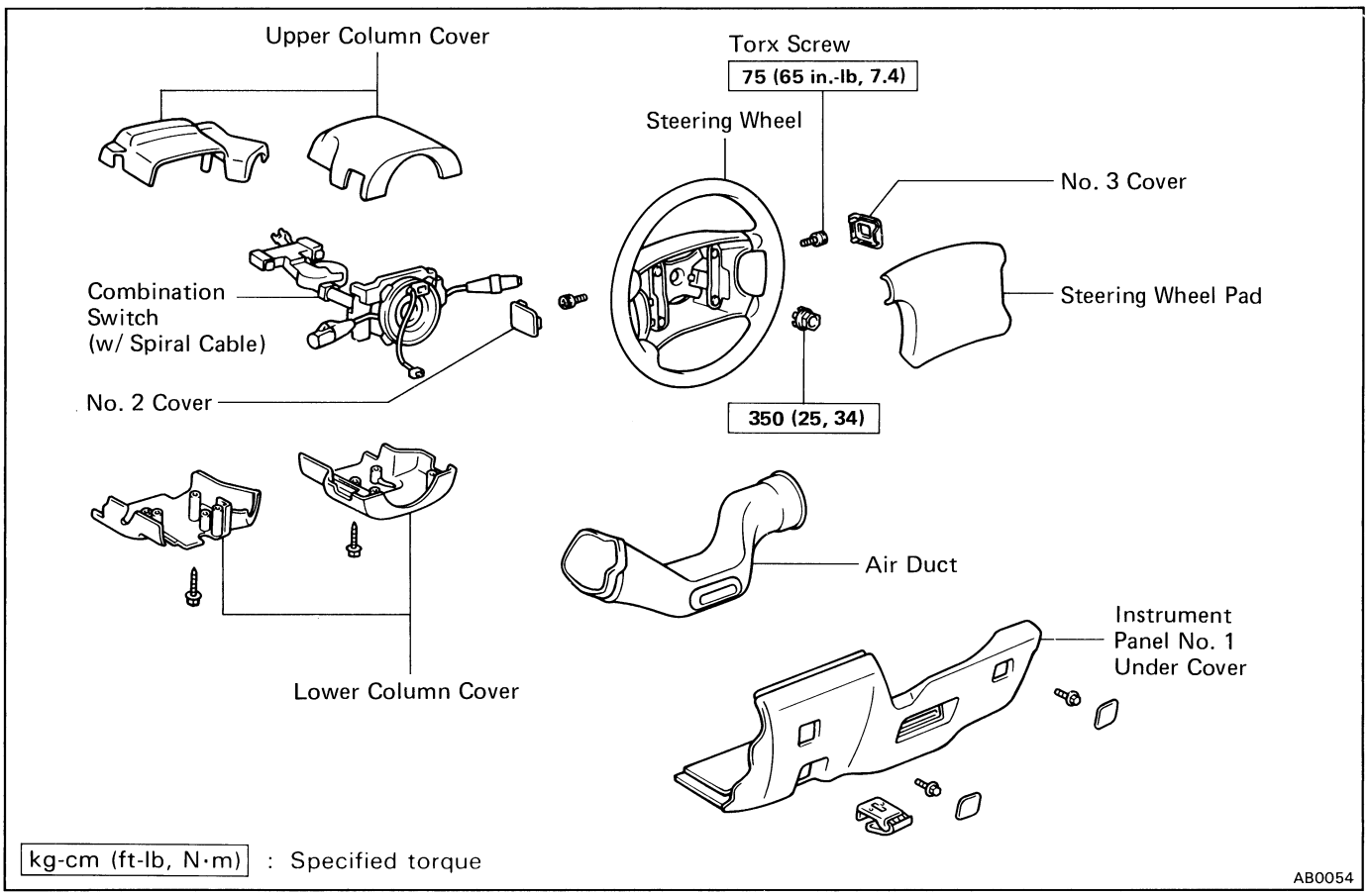

(MAIN POINTS OF REMOVAL AND INSTALLATION)

CAUTION: Work must be started after approx. 20 seconds or longer from the time the ignition switch is turned to the LOCK position and the negative (−) terminal cable is disconnected from the battery (See page AB-2).

NOTICE:

- **If the wiring connector of the airbag system is disconnected with the ignition switch at ON or ACC, diagnostic codes will be recorded.**
- **Never use airbag parts from another vehicle. When replacing parts, replace with new parts.**

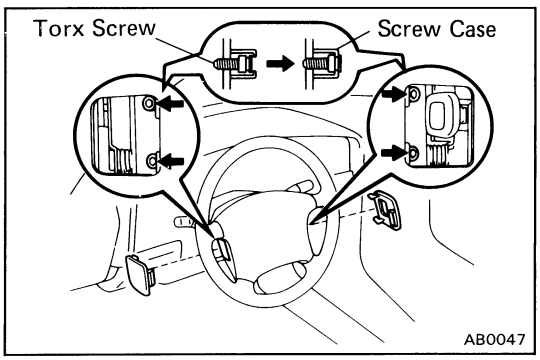

1. REMOVE STEERING WHEEL PAD

(a) Remove negative terminal (−) from the battery.

(b) Place the front wheels facing straight ahead.

(c) Using a torx wrench, loosen the four screws.

Torx wrench: T30 (Part No. 09042-00010 or locally manufactured tool)

(d) Loosen the torx screws until the groove along the screw circumference catches on the screw case.

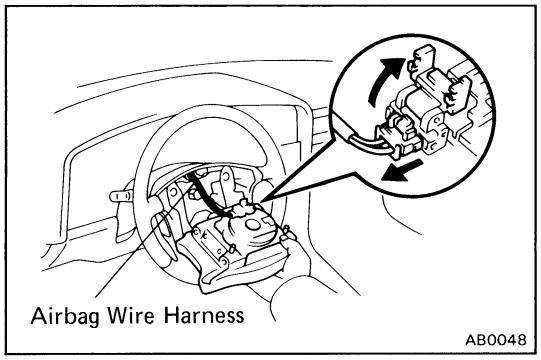

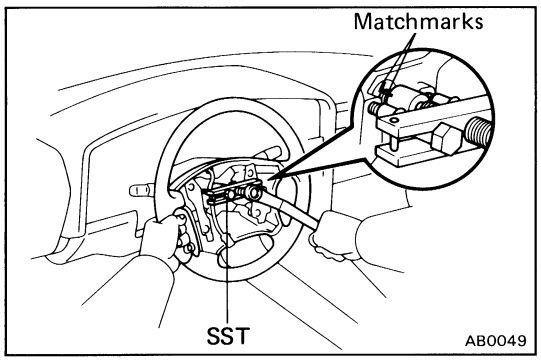

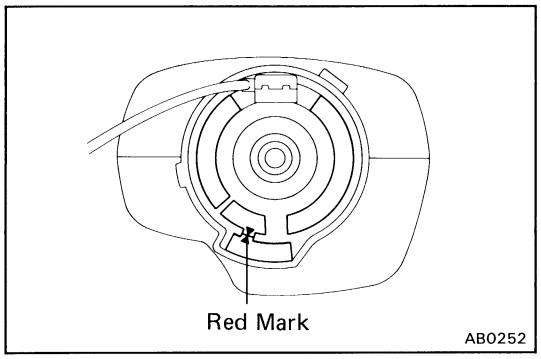

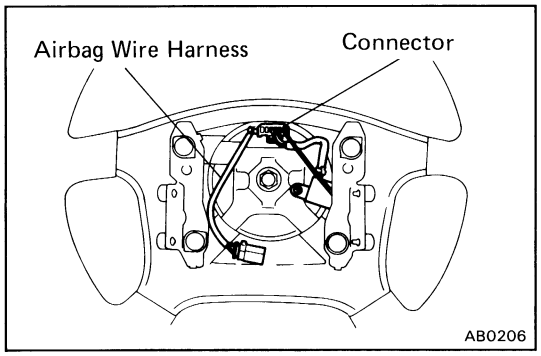

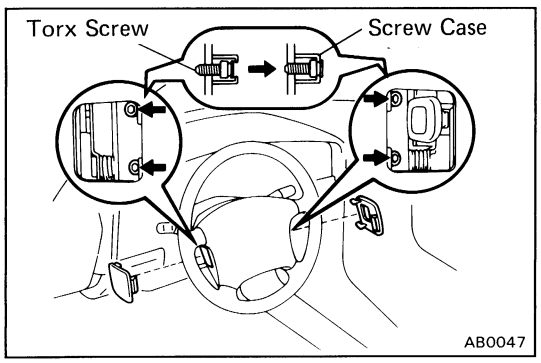

(e) Pull the wheel pad out from the steering wheel and disconnect the airbag connector.

NOTICE: When removing the wheel pad, take care not to pull the airbag wire harness.

CAUTION:
- **When storing the wheel pad, keep the upper surface of the pad facing upward (See page AB-3, 4).**
- **Never disassemble the wheel pad.**

2. REMOVE STEERING WHEEL

(a) Disconnect the connector.

(b) Remove the set nut.

(c) Place matchmarks on the steering wheel and main shaft.

(d) Using SST, remove the steering wheel.

SST 09213-31021

3. REMOVE AND INSTALL SPIRAL CABLE FROM/TO COMBINATION SWITCH
(See page BE-18)

NOTICE: Do not disassemble the spiral cable or apply oil to it.

4. CENTER SPIRAL CABLE

(a) Check that the front wheels are facing straight ahead.

(b) Turn the spiral cable counterclockwise by hand until it becomes harder to turn the cable.

(c) Then rotate the spiral cable clockwise about 2 1/2 turns to align the red mark.

HINT: The spiral cable will rotate about 2 1/2 turns to either left or right of the center.

5. INSTALL STEERING WHEEL

(a) Align matchmarks on the steering wheel and main shaft, and install the steering wheel to the main shaft.

(b) Install and torque the set nut.

Torque: 350 kg-cm (25 ft-lb, 34 N·m)

(c) Connect the connector.

6. INSTALL STEERING WHEEL PAD

(a) Connect the airbag connector.

(b) Install the wheel pad after confirming that the circumference groove of the torx screws is caught on the screw case.

(c) Using a torx wrench, tighten the four screws.

Torque: 75 kg-cm (65 in.-lb, 7.4 N·m)

NOTICE:
- **Make sure the wheel pad is installed to the specified torque.**
- **If the wheel pad has been dropped, or there are cracks, dents or other defects in the case or connector, replace the wheel pad with a new one.**
- **When installing the wheel pad, take care that the wirings do not interfere with other parts and are not pinched between other parts.**

7. CHECK STEERING WHEEL CENTER POINT

Front Airbag Sensor

Remove and install the parts as shown.

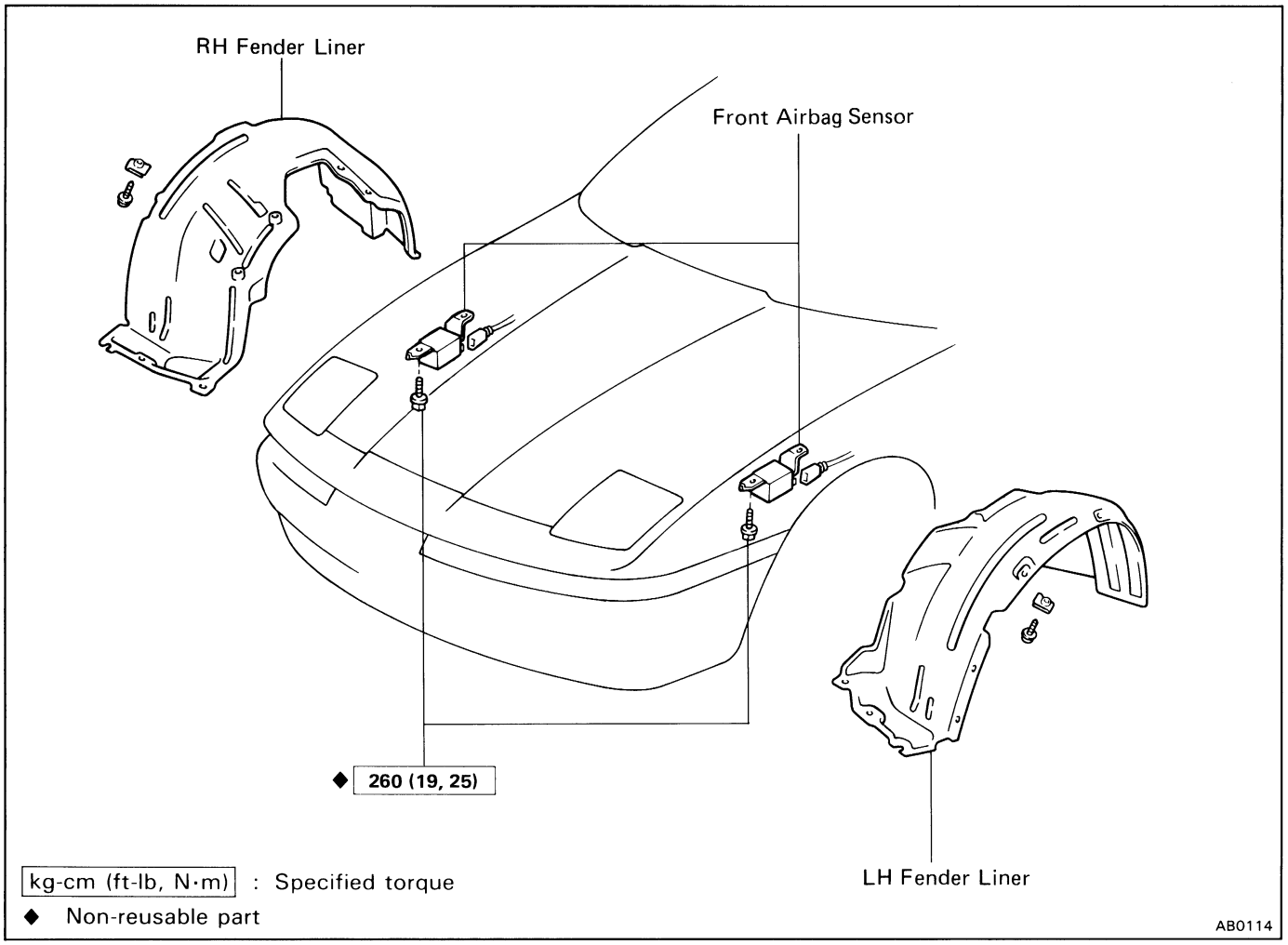

(MAIN POINTS OF REMOVAL AND INSTALLATION)

CAUTION: Work must be started after approx. 20 seconds or longer from the time the ignition switch is turned to the LOCK position and the negative (−) terminal cable is disconnected from the battery (See page AB-2).

NOTICE:

- **If the wiring connector of the airbag system is disconnected with the ignition switch at ON or ACC, diagnostic codes will be recorded.**
- **Never use airbag parts from another vehicle. When replacing parts, replace with new parts.**
- **Never reuse the sensor involved in a collision when the airbag has deployed.**
- **Never repair a sensor in order to reuse it.**

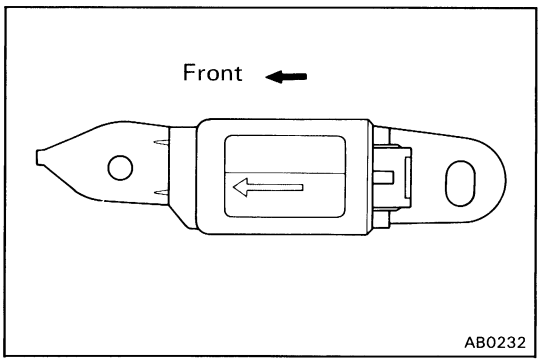

INSTALL FRONT AIRBAG SENSOR

Install the sensor with the arrow on the sensor facing toward the front of the vehicle.

Torque: 260 kg-cm (19 ft-lb, 25 N·m)

NOTICE:

- **Make sure the sensor is installed to the specified torque.**
- **If the sensor has been dropped, or there are cracks, dents or other defects in the case, bracket or connector, replace the sensor with a new one.**
- **The sensor set bolts have been anti-rust treated. When the sensor is removed, always replace the set bolts with new ones.**
- **After installation, shake the sensor to check that there is no looseness.**
- **The front sensor is equipped with an electrical connection check mechanism. Be sure to lock this mechanism securely when connecting the connector. If the connector is not securely locked, a malfunction code will be detected by the diagnosis system.**
- **Check that the dimensions of the body where the front airbag sensor is installed match those in the body dimension drawings on page BO-64.**

  (The airbag may malfunction, or may not work, if the mounting angle or dimensions of the sensor mount are not correct.)

Center Airbag Sensor Assembly

Remove and install the parts as shown.

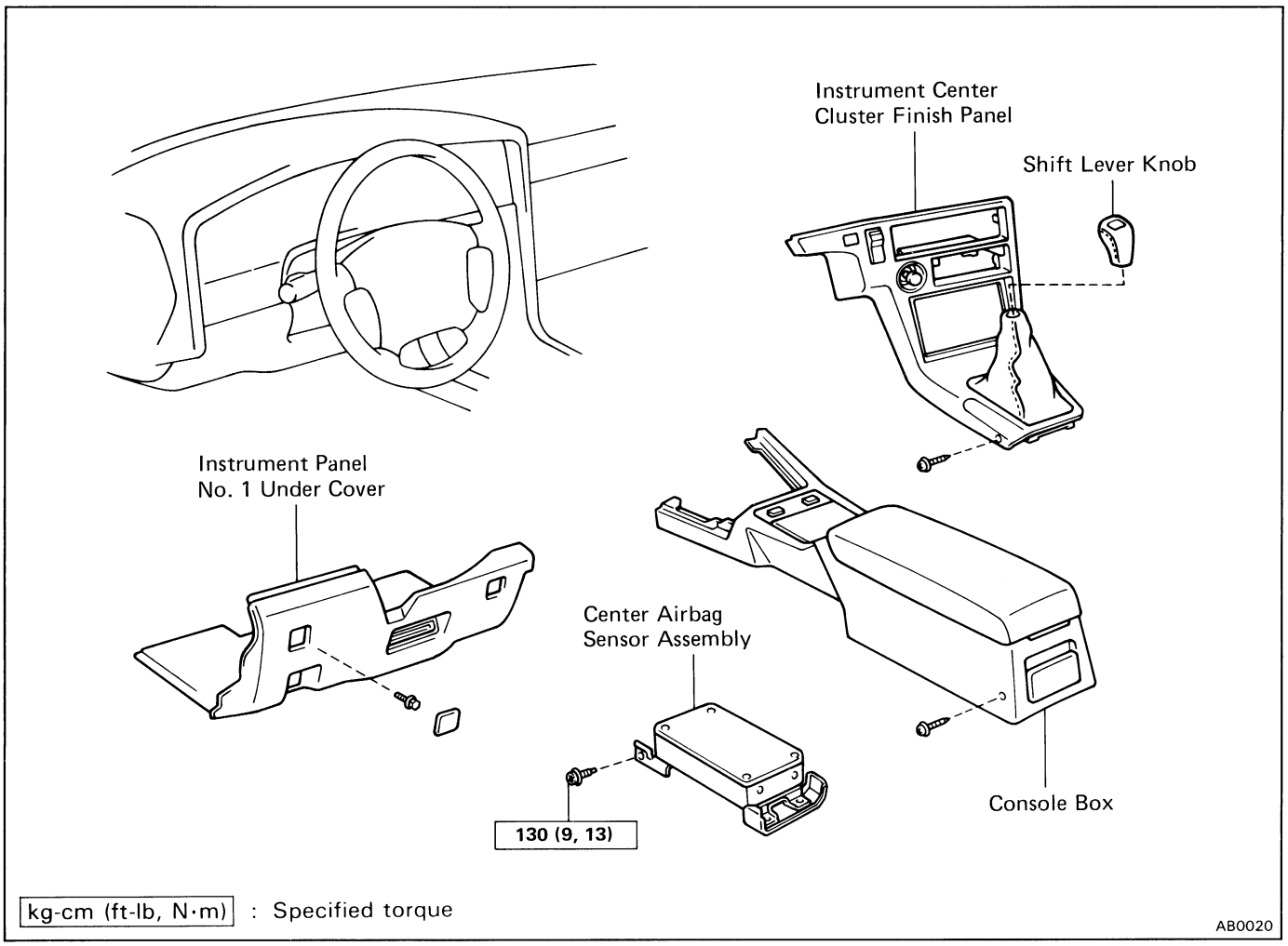

(MAIN POINTS OF REMOVAL AND INSTALLATION)

CAUTION: Work must be started after approx. 20 seconds or longer from the time the ignition switch is turned to the LOCK position and the negative (−) terminal cable is disconnected from the battery (See page AB-2).

NOTICE:

- **Do not open the cover or the case of the ECU and various computers unless absolutely necessary. (If the IC terminals are touched, the IC may be destroyed by static electricity.)**
- **Never use airbag parts from another vehicle. When replacing parts, replace with new parts.**
- **Never repair a sensor in order to reuse it.**

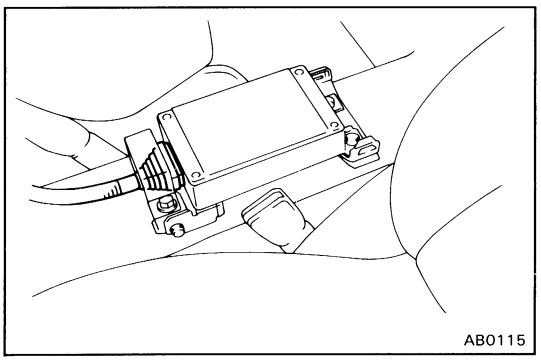

REMOVE AND INSTALL CENTER AIRBAG SENSOR ASSEMBLY

(a) Disconnect and connect the connector.

NOTICE: Removal and installation of the connector is done with the sensor assembly installed.

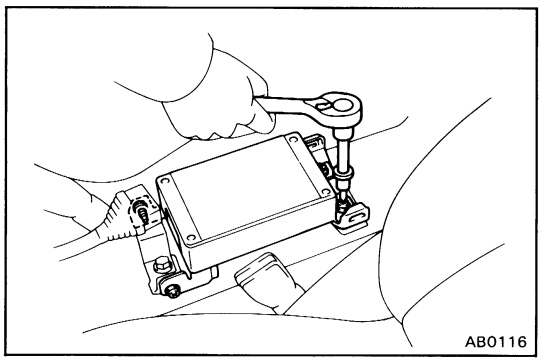

(b) Using a torx wrench, loosen and tighten the four screws.

Torx wrench: T40 (Part No. 09042-00020 or locally manufactured tool)

Torque: 130 kg-cm (9 ft-lb, 13 N·m)

NOTICE:

- **Make sure the sensor assembly is installed to the specified torque.**
- **If the sensor assembly has been dropped, or there are cracks, dents or other defects in the case, bracket or connector, replace the sensor assembly with a new one.**
- **When installing the sensor assembly, take care that the airbag wiring does not interfere with other parts and is not pinched between other parts.**
- **After installation, shake the sensor assembly to check that there is no looseness.**

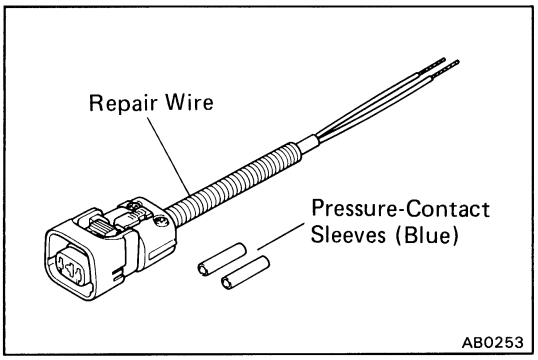

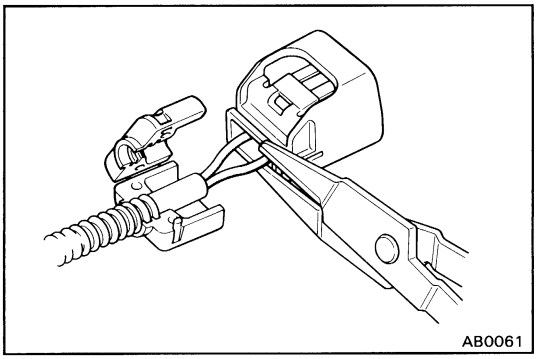

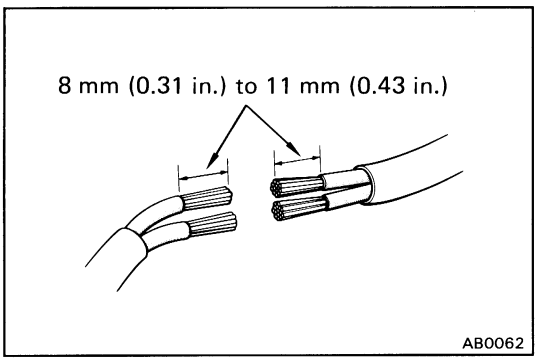

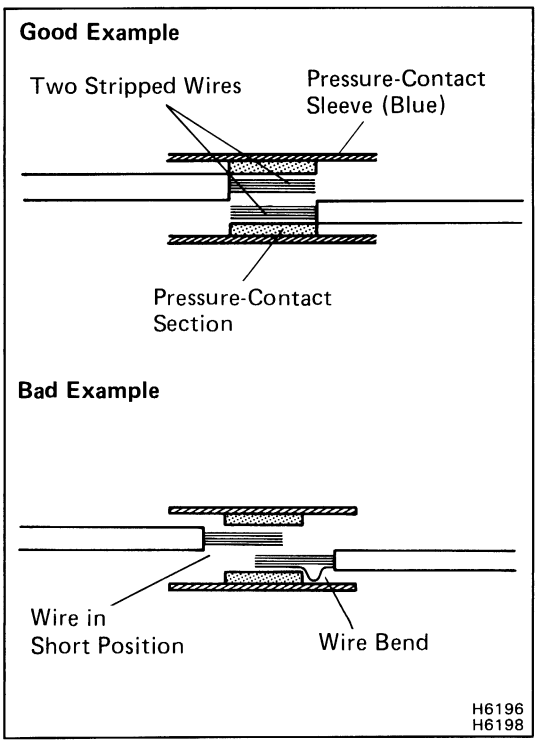

REPLACEMENT OF REPAIR WIRE FOR FRONT AIRBAG SENSOR

Repair wire with two pressure-contact sleeves (Part No. 82988-50010) has been prepared for exclusive use in repairing connector damage etc. caused by frontal collision of the vehicle.

When repairing the front airbag sensor connector on the wire harness side, always use the special repair wire.

NOTICE: Do not replace the connector housing or terminal only.

REPLACEMENT OF AIRBAG REPAIR WIRE

CAUTION: Work must be started after approx. 20 seconds or longer from the time the ignition switch is turned to the "LOCK" position and the negative (−) terminal cable is disconnected from the battery.

1. DISCONNECT WIRE HARNESS AT VEHICLE SIDE

(a) Remove the cover at the rear of the connector housing and expose the wire harness.

(b) Cut the wire harness behind the connector housing.

HINT: The operation is performed more easily if the wire harness is left as long as possible.

2. CONNECT FRONT AIRBAG SENSOR WIRE HARNESS AT VEHICLE SIDE AND REPAIR WIRE

(a) Start stripping at least 8 mm (0.31 in.) to 11 mm (0.43 in.) away from the end of the existing harness at vehicle side and also from the end of the repair wire.

NOTICE: Take care not to damage the wire when stripping the wire harness lead. After finishing the operation, visually inspect the wire. If there is any damage, perform the operation again.

(b) Overlap the two stripped wire ends inside of the pressure-contact sleeve as illustrated in the left.

HINT: The blue pressure-contact sleeve (Part No. 82999-12020) is available as a solitary spare part.

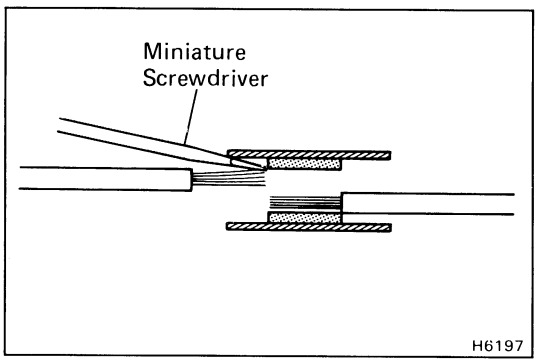

HINT: You might find it easier if you use a miniature screwdriver as a guide as you insert wires into the sleeve.

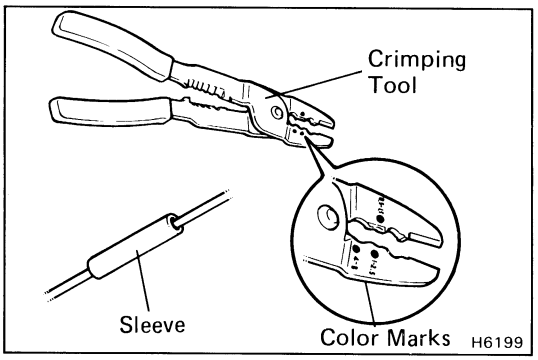

(c) The crimping tool (AMP Part No. 169060-2) has color marks on it. Place the sleeve in the correct section of the tool according to the color of the sleeve itself.

HINT: As the crimping tool, AMP "Part No. 169060-2" is convenient to use.

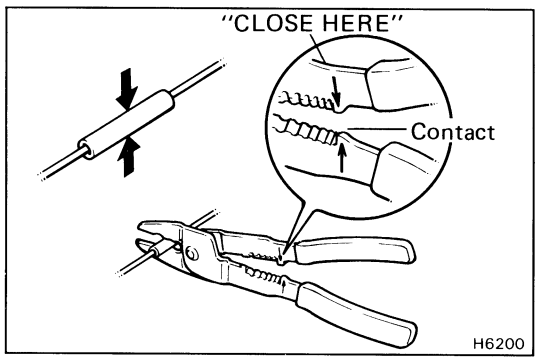

(d) With the center of the sleeve correctly placed between the crimping jaws, squeeze the crimping tool until either end comes into contact at the section marked by "CLOSE HERE".

HINT: Check to see that the sleeve and wires are still in the correct position before closing the crimping tool ends with steady pressure.

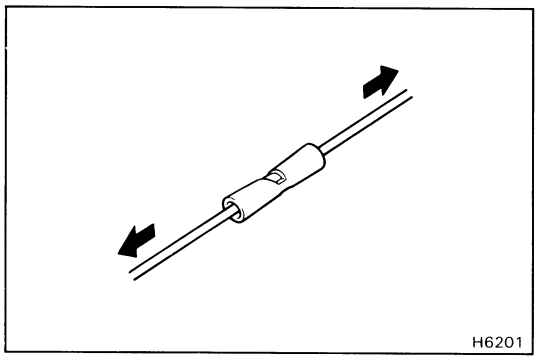

(e) Pull the joined wires to either end. Make sure that they are joined firmly by the sleeve.

NOTICE: If the joined wires come loose the splice is defective, so replace the sleeve and repeat the procedure.

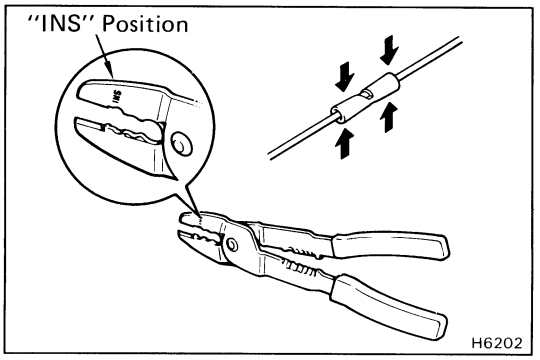

(f) Crimp both ends of the sleeve with the crimping tool at the "INS" position.

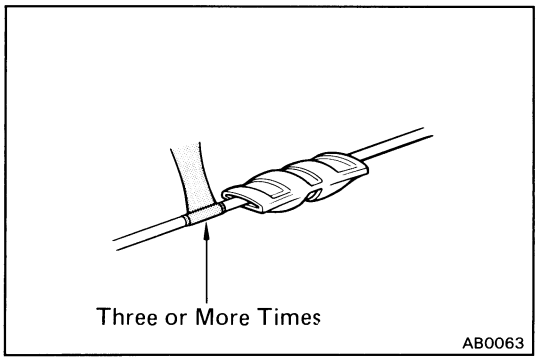

3. PROTECT JOINED SECTION

Wrap silicon tape around the joins to protect them from water.

HINT:

- Before starting the operation, thoroughly wipe dirt and grease off the sections to be joined.
- If the adhesive surfaces of two tapes come in contact they will stick together and will not come a part, so do not remove the backing film except when using the tape.
- Do not let oil and dust, etc. get on the tape surface.

(a) Ready about 100 mm (3.94 in.) of silicon tape (Part No. 08231-00045) and peel off the film.

(b) Stretch the silicon tape until its width is reduced by half.

(c) About 10 mm (0.39 in.) from the end of the pressure-contact sleeve, wrap the silicon tape around the sleeve three or more times while stretching the tape.

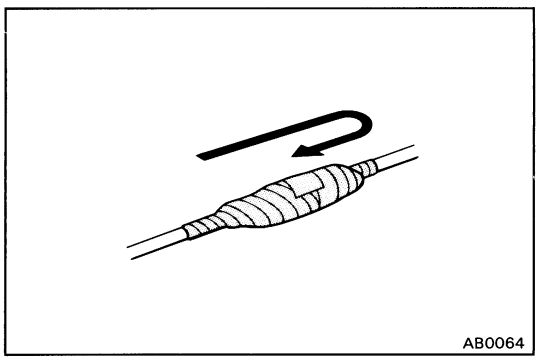

(d) Wrap the remaining part of sleeve with half of the tape overlapping at each turn.

(e) Firmly wrap the tape two times or more about 10 mm (0.39 in.) from the other end of the pressure-contact sleeve, then wrap the tape back towards the start again and firmly finish winding the tape around the center of the sleeve.

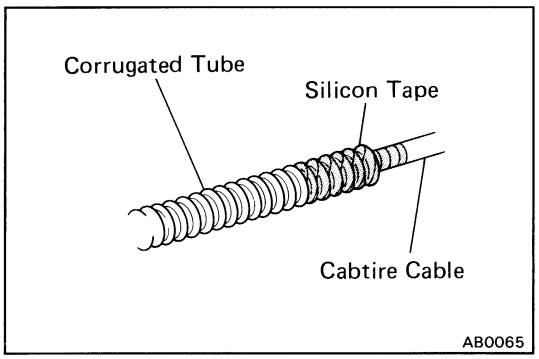

(f) Fix the corrugated tube to the cabtire cable using silicon tape.

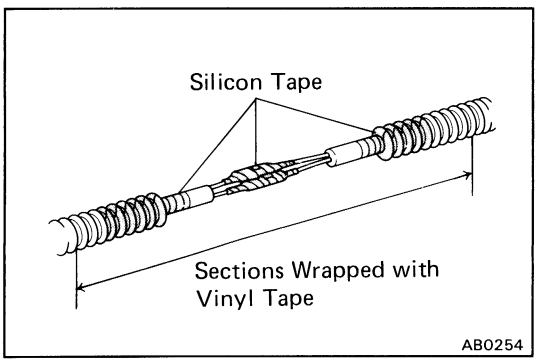

(g) After applying the silicon tape, apply vinyl tape on the corrugated tube of repair wire side over to the corrugated tube of vehicle wire harness side.

TROUBLESHOOTING

How To Proceed With Troubleshooting

Malfunction symptoms of the airbag system are difficult to confirm, so the diagnostic codes become the most important source of information when troubleshooting. Perform troubleshooting of airbag system in accordance with the following procedure:

HINT: Do not disconnect the battery negative (−) terminal cable until step 3, Diagnostic Code Check and Recording, has been completed.

1 CUSTOMER PROBLEM ANALYSIS

Using the CUSTOMER PROBLEM ANALYSIS CHECK SHEET (See page AB-28) for reference, ask the customer in as much detail as possible about the problem.

2 WARNING LIGHT CHECK

Check the airbag warning light. If the light remains on, a malfunction is stored in the center airbag sensor assembly, so proceed to step 3. If the airbag warning light is not on, a malfunction has occurred in the airbag warning light circuit, so perform troubleshooting for code 22.

HINT: Code 22 is recorded when a malfunction occurs in the airbag warning light system.
If an open malfunction occurs in the airbag warning light system, the airbag warning light does not light up, so that until the malfunction is repaired, the diagnostic codes (including code 22) cannot be confirmed.

3 DIAGNOSTIC CODE CHECK AND RECORDING

Check the diagnostic codes and make a note of any malfunction codes which are output. If a normal code is output, an abnormality in the power source circuit may have occurred, so perform troubleshooting for source voltage in step 8.

If code 22 is output, skip steps 4 and 5 and proceed to step 7.

4 CLEARING OF MALFUNCTION CODE (EXCEPT CODE 41)

Clear the malfunction code.

HINT: The malfunction code output in step 3 indicates that a malfunction has occurred in the circuit designated by the malfunction code, but does not indicate whether the malfunction is still occurring or whether it was in the past.
Accordingly, it is necessary to find out the present condition of the malfunction occurrence by clearing the malfunction code and performing the diagnostic code check again. If this operation is neglected and troubleshooting is performed using only the malfunction code confirmed in step 3, isolating the problem component becomes difficult and invites mistaken diagnosis.

5 DIAGNOSTIC CODE CHECK AND RECORDING

6 SYMPTOM SIMULATION

After repeating ignition switch ON-OFF operation (ON: wait 20 secs., OFF: wait 20 secs.) 5 times, check the diagnostic codes. If any code other than code 41 is output, the malfunction is still occurring, so proceed to step 7.

If code 41 only is output, the following three cases are possible:

- Intermittent trouble occurred previously, but it is now normal.
- The problem has been corrected, but clearing of code 41 has been forgotten.
- There is a malfunction in the circuit for code 41.

Focusing on the circuit of the malfunction code stored in step 3, use the simulation method in step 6 in order to simulate the malfunction. If the malfunction occur, proceed to step 7 : if not, proceed to step 12.

NOTICE: When connecting the battery after clearing the malfunction code, always do it with the ignition switch in LOCK position. When the battery has been reconnected, turn the ignition switch to ACC or ON position after at least 2 seconds have elapsed.
If the battery is reconnected with the ignition switch in ACC or ON position, or the ignition switch is turned to ACC or ON within 2 seconds of connecting the battery, it is possible that the diagnosis system will not operate normally.

HINT: Determine the malfunction in the airbag system in step [6] by whether or not a malfunction code other than code 41 is output.

[7] DIAGNOSTIC CODE CHART

Proceed to the appropriate flow chart in step [8] in accordance with the malfunction code found in step [5] or [6].

[8] CIRCUIT INSPECTION [9] REPAIR

Find out if the problem lies in a sensor, actuator or wire harness and connector, and repair the problem. After the problem part is repaired, reinstall the disassembled parts. Do not start work until at least 20 seconds after the ignition switch is turned to the LOCK position and the negative (—) terminal cable is disconnected.

CAUTION: If incorrect procedure is used, a malfunction may occur in the system or there is the danger that the airbag may be accidentally activated during the repair operation. Carefully read the GENERAL DESCRIPTION (See page AB-2) and the cautions for each operation, and perform repairs in the correct order using the correct methods.

HINT: The following illustration for the CIRCUIT INSPECTION shows each connector for the circuit from the center airbag sensor assembly to the steering wheel pad (squib).

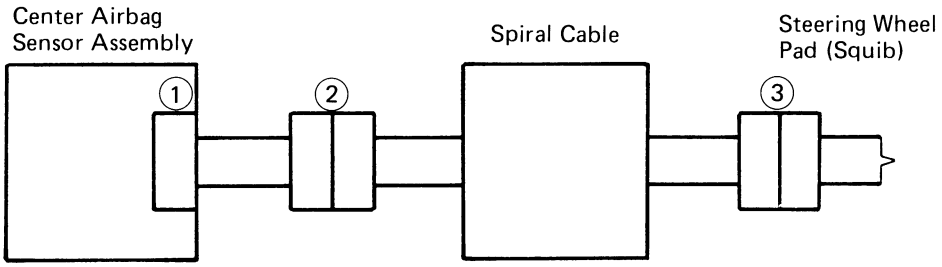

AB0091

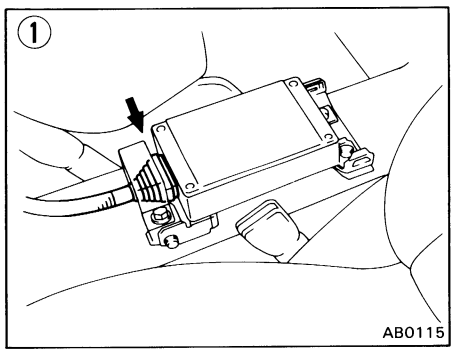

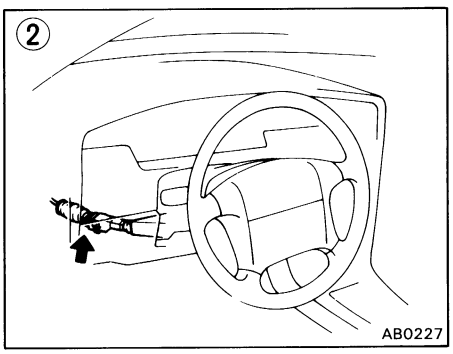

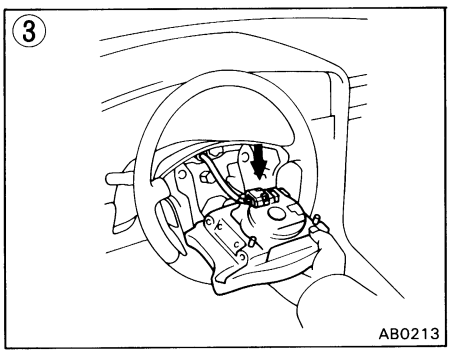

[10] CLEARING OF MALFUNCTION CODE (EXCEPT CODE 41)

When all the malfunction codes found in steps [5] and [6] have been repaired, clear the malfunction codes.

11 DIAGNOSTIC CODE CHECK

After repeating ignition swtich ON-OFF operation (ON: wait 20 secs., OFF: wait 20 secs.) 5 times, check the diagnostic codes. If only code 41 is displayed, proceed to step 12. If a code other than code 41 is displayed, return to step 7 and troubleshoot the displayed malfunction code.

NOTICE: When connecting the battery after clearing the malfunction code, always do it with the ignition switch in LOCK position.When the battery has been reconnected, turn the ignition switch to ACC or ON position after at least 2 seconds have elapsed.
If the battery is reconnected with the ignition switch in ACC or ON position, or the ignition switch is turned to ACC or ON within 2 seconds of connecting the battery, it is possible that the diagnosis system will not operate normally.

12 CLEARING OF MALFUNCTION CODE 41 STORED IN MEMORY

Clear the malfunction code 41 stored in memory. This operation is not necessary only in case that the power source voltage returns to normal.

13 CONFIRMATION TEST

Check the warning light again and confirm that all the malfunctions have been repaired. If the warning light indicates an abnormality, repeat the operation again from step 2. If code 41 is output at step 3, skip steps 4 and 5 and proceed to step 7.

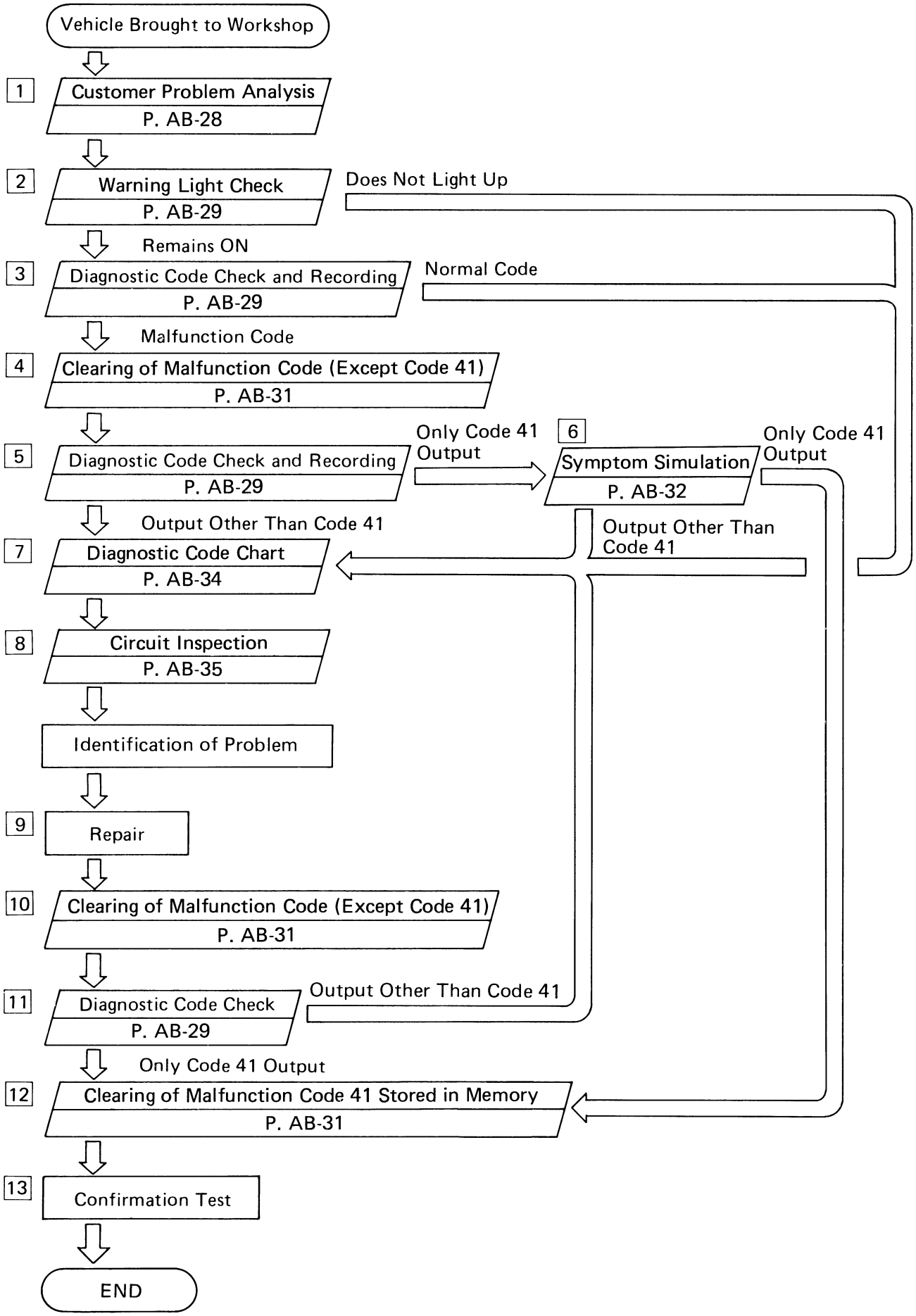
Vehicle Brought to Workshop
1
Customer Problem Analysis
P. AB-28
2
Warning Light Check
P. AB-29
Does Not Light Up
Remains ON
3
Diagnostic Code Check and Recording
P. AB-29
Normal Code
Malfunction Code
4
Clearing of Malfunction Code (Except Code 41)
P. AB-31
5
Diagnostic Code Check and Recording
P. AB-29
Only Code 41 Output
6
Symptom Simulation
P. AB-32
Only Code 41 Output
Output Other Than Code 41
Output Other Than Code 41
7
Diagnostic Code Chart
P. AB-34
8
Circuit Inspection
P. AB-35
Identification of Problem
9
Repair
10
Clearing of Malfunction Code (Except Code 41)
P. AB-31
11
Diagnostic Code Check
P. AB-29
Output Other Than Code 41
Only Code 41 Output
12
Clearing of Malfunction Code 41 Stored in Memory
P. AB-31
13
Confirmation Test
END

Customer Problem Analysis Check Sheet

SRS AIRBAG System Check Sheet

Inspector's Name :

Customer's Name		Registration No.	
		Registration Year	/ /
		Frame No.	
Date Vehicle Brought In	/ /	Odometer Reading	Miles

Date of Problem Occurrence		/ /
Conditions at Time of Problem Occurrence	Weather	☐Fine ☐Cloudy ☐Rainy ☐ Snowy ☐ Various/Other
	Outdoor Temperature	☐Hot ☐Warm ☐Cool ☐ Cold (Approx. °C (°F))
	Vehicle Operation	☐Starting ☐Idling ☐Driving [☐Constant Speed☐Acceleration☐Deceleration☐Other]
	Condition of road	[ ]

Details of Problem	
Vehicle Inspection, Repair History Prior to Occurrence of Malfunction (Including Airbag System)	

(Diagnosis System Inspection)

Airbag Warning Light Inspection	1st Time	☐ Remain On ☐ Sometimes Lights Up ☐ Does Not Light Up
	2nd Time	☐ Remain On ☐ Sometimes Lights Up ☐ Does Not Light Up
Diagnostic Code Inspection	1st Time	☐ Normal Code ☐ Malfunction Code [Code.]
	2nd Time	☐ Normal Code ☐ Malfunction Code [Code.]

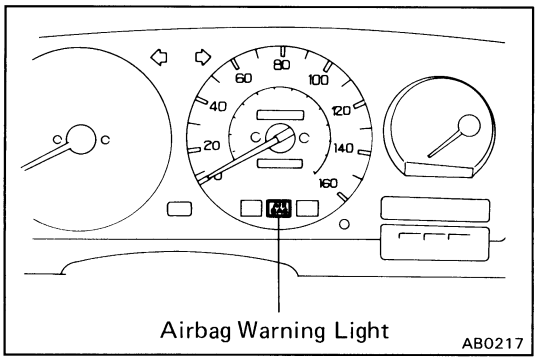

Diagnosis Inspection

AIRBAG WARNING LIGHT CHECK

(a) Turn the ignition switch to ACC or ON and check that the airbag warning light lights up.

(b) Check that the airbag warning light goes out after approx. 6 seconds.

HINT:

- When the ignition switch is at ACC or ON and the airbag warning light remains on, the center airbag sensor assembly has detected a malfunction code.
- If, after approx. 6 seconds have elapsed, the airbag warning light sometimes lights up or the airbag warning light lights up even when the ignition switch is OFF, a short in the airbag warning light circuit can be considered likely. Proceed to ''Airbag warning light system (always lit up)'' on page AB-75.

DIAGNOSTIC CODE CHECK

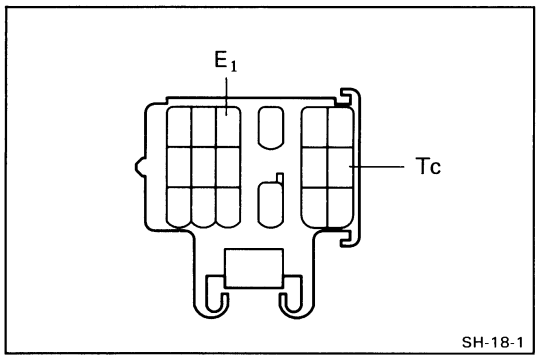

1. OUTPUT DIAGNOSTIC CODE

(a) Turn the ignition switch to ACC or ON position and wait approx. 20 seconds.

(b) Using SST, connect terminals T_C and E_1 of the check connector.

SST 09843-18020

NOTICE: Never make a mistake with the terminal connection position as this will cause a malfunction.

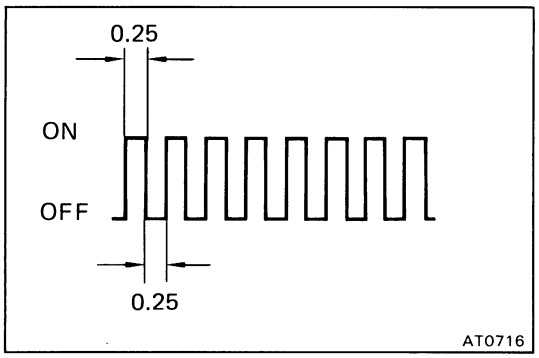

2. READ DIAGNOSTIC CODE

Read the diagnostic code as indicated by the number of times the airbag warning light blinks.

- **Normal code indication**

  The light will blink 2 times per second.

- **Malfunction code indication**

  In the event of a malfunction, the light will blink. The first number of the code No. will equal the first digit of a 2-digit diagnostic code, and after a 1.5 second pause, the 2nd number of the code No. will equal the 2nd digit. If there are two or more codes, there will be a 2.5 second pause between each.
  After all the codes have been output, there will be a 4.0 second pause and they will all be repeated.

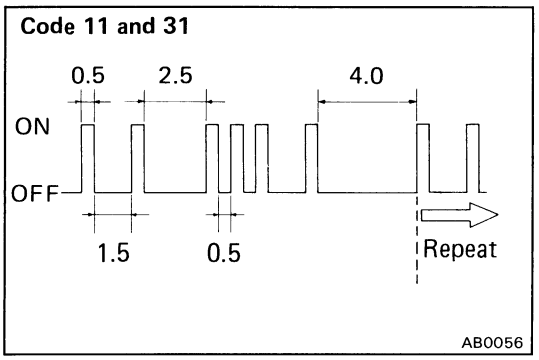

HINT:

- In the event of a number of trouble codes, indication will begin from the smaller numbered code to the larger.
- If a diagnostic code is not output or is continuously output, proceed to the Tc terminal circuit inspection on page AB-77.

DIAGNOSTIC CODES

Code No.	Blink Pattern	Diagnosis	Trouble Area	AIRBAG Warning Light
(Normal)	FI1401	• System normal	—	OFF
		• Source voltage drop	• Battery • Center airbag sensor assembly	ON
11	AB0057	• Short in squib circuit or front airbag sensor circuit (to ground)	• Steering wheel pad (squib) • Front airbag sensor • Spiral cable • Center airbag sensor assembly • Wire harness	ON
12	FI1389	• Short in squib circuit or front airbag sensor circuit (to +B)	• Steering wheel pad (squib) • Front airbag sensor • Spiral cable • Center airbag sensor assembly • Wire harness	ON
13	FI1390	• Short in squib circuit (between D^+ wire harness and D^- wire harness)	• Steering wheel pad (squib) • Spiral cable • Center airbag sensor assembly • Wire harness	ON
14	FI1391	• Open in squib circuit	• Steering wheel pad (squib) • Spiral cable • Center airbag sensor assembly • Wire harness	ON
15	AB0058	• Open in front airbag sensor circuit	• Front airbag sensor • Center airbag sensor assembly • Wire harness	ON
22	FI1392	• Airbag warning light system malfunction	• Airbag warning light • Center airbag sensor assembly • Wire harness	ON
31	FI1394	• Center airbag sensor assembly malfunction	• Center airbag sensor assembly	ON
41	FI1396	• Malfunction stored in memory	• (Center airbag sensor assembly)	ON

HINT:

- When the airbag warning light remains lit up and the diagnostic code is the normal code, this means a source voltage drop.
  This malfunction is not stored in memory by the center airbag sensor assembly and if the power source voltage returns to normal, after approx. 10 seconds the airbag warning light will automatically go out.
- Code 22 is recorded when a malfunction occurs in the airbag warning light system. If an open malfunction occurs in the airbag warning light system, the airbag warning light does not light up, so that until the malfunction is repaired, the diagnostic codes (including code 22) cannot be confirmed.
- When a malfunction occurs in the airbag system, malfunction codes 11 to 31 are output. After repairing the malfunction indicated by malfunction codes 11 to 31, codes 11 to 31 are cleared from the memory, but code 41 is output instead. Once the malfunction has been detected, the airbag warning light will remain lit up until code 41 is cleared, even though the malfunction has been repaired.
- When two or more codes are indicated, the lowest numbered code will appear first.
- If a code not listed on the chart is displayed, then the center airbag sensor assembly is faulty.

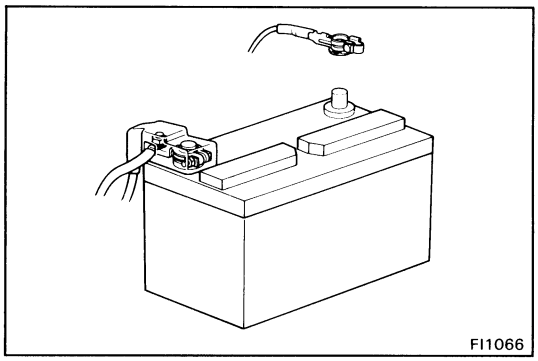

CLEARING OF DIAGNOSTIC CODE

1. CLEARING OF MALFUNCTION CODE (EXCEPT CODE 41)

Remove the battery negative terminal or ECU-B fuse for 10 seconds or more with the ignition switch OFF.

NOTICE: When connecting the battery after cancelling the malfunction code, always do it with the ignition switch in LOCK position. If the battery is connected with the ignition switch in ACC or ON position, there are cases when the diagnosis system does not operate normally.

HINT:
- Code 41 cannot be cleared by this method.
- The lower the temperature, the longer the battery negative terminal must be left off.
- Other memory systems (clock, audio system) will also be cancelled out (See page AB-2).

2. CLEARING OF MALFUNCTION CODE 41 STORED IN MEMORY

(a) Connect service wires to terminals Tc and AB of the check connector.

(b) Turn the ignition switch ACC or ON and wait approx. 6 seconds.

(c) Starting with the Tc terminal, apply body ground alternately to terminal Tc and terminal AB twice each in cycles of 1.0 ± 0.5seconds. Finally, keep applying body ground to terminal Tc.

HINT: When alternating between body ground of terminals Tc and AB, simultaneously release one from body ground while applying it to the other terminal. If the time interval in between is too long, code 41 will not be cleared.

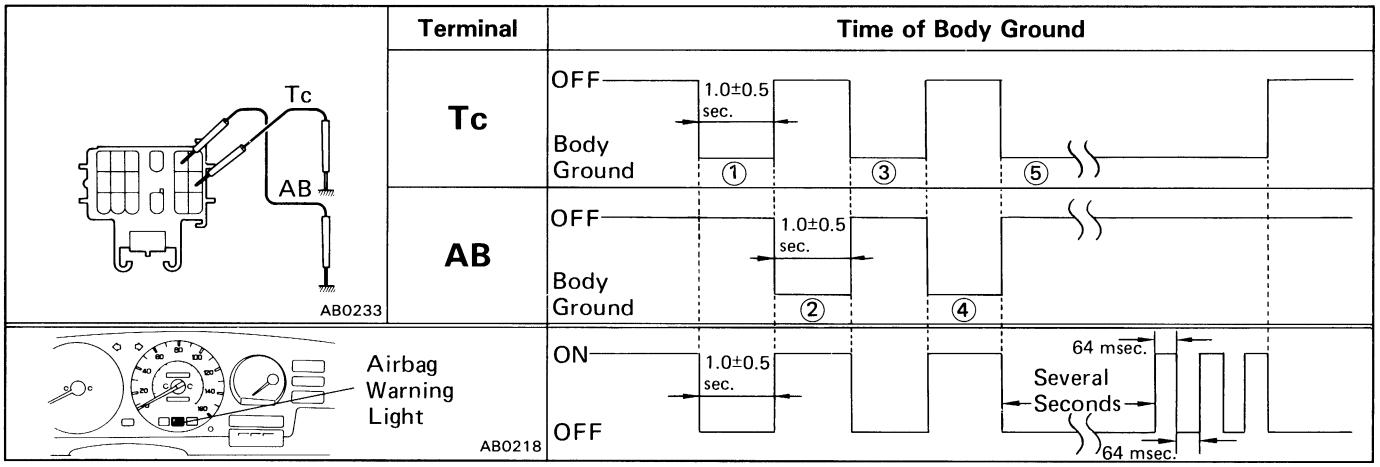

(d) After several seconds, when the airbag warning light starts to blink on a 64 m second cycle, cancellation is completed.

HINT: This method clears not only code No.41, but also other malfunction codes all at once.
Except when instructed by the troubleshooting procedure, use this method only when the repair procedure is completed (See page AB-24).

Symptom Simulation

''Intermittent troubles or problems'' are the malfunctions about which the customer has a complaint, but which do not occur and can not be confirmed in the workshop. The intermittent problems also include complaints about the airbag warning light going on and off erratically.
The self-diagnostic system stores the circuit of the intermittent problem in memory even if the ignition switch is turned off.
And, for accurate diagnosis of the problems, ask the customer to obtain information as much as possible following the customer problem analysis check sheet (See page AB-28), and try to reproduce the intermittent problem.
The problem simulation methods described below are the effective ways for this nature of problem to produce the problem conditions by applying vibration, heat, and humidity.

1	VIBRATION METHOD:	When vibration seems to be the major cause.

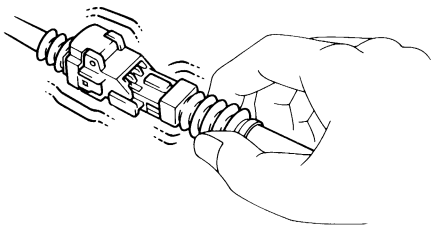
AB0245

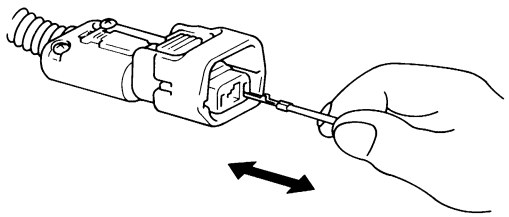
K9464

CONNECTORS

Slightly shake the connector vertically and horizontally.

(Inspection of connectors)

(a) Does the wire harness connecting with its corresponding part have insufficient slack?

(b) Are the terminals dirty?

(c) Are the terminals making loose contact due to terminals spread?

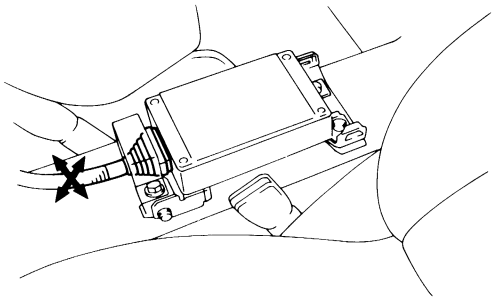
AB0115

WIRE HARNESS

Slightly shake the wire harness vartically and horizontally. The connector joint, fulcrum of the vibration, and body through portion are the major areas to be checked thoroughly.

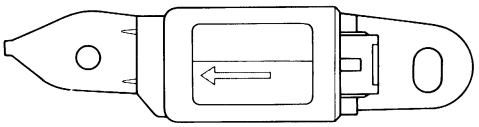
AB0232

PARTS AND SENSORS

Apply vibration slightly by a finger to the part or sensor considered to be the problem cause and check if the malfunction will occur.

CAUTION: Do not apply vibration to the center airbag sensor.

2 HEAT METHOD: When the problem seems to occur when the suspect area is heated.

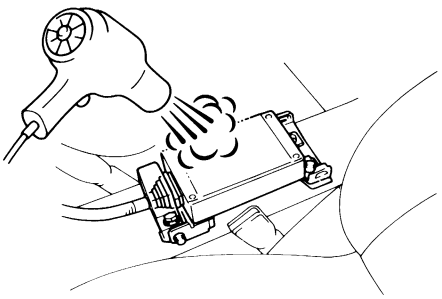

AB0249

Heat the component that is likely the cause of the malfunction with a hair dryer or similar object. Check to see if the malfunction will occur.

NOTICE:

- **Do not heat to more than 60°C (140°F) (Temperature limit that the component can be touched with a hand.).**
- **Do not apply heat directly to part in the ECU.**

3 WATER SPRINKLING METHOD: When the malfunction seems to occur on a rainy day or in a high-humidity condition.

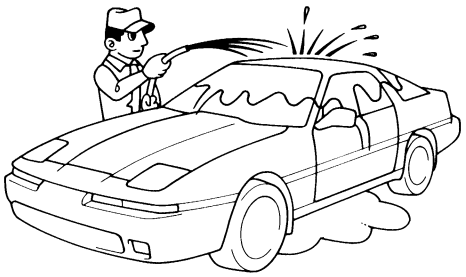

AB0248

Sprinkle water onto the vehicle and check to see if the malfunction will occur.

NOTICE: Never apply water directly onto the electronic components.

HINT:

- If a vehicle is subject to water leakage, the leaked water may contaminate the ECU. When testing a vehicle with a water leakage problem, special caution must be paid.

4 OTHER: When the malfunction seems to occur when electrical load is excessive.

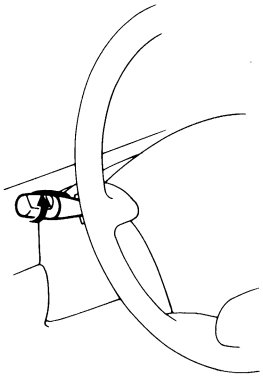

AB0234

Turn on all electrical loads including the heater blower, headlights, rear window defogger, etc. and check to see if the malfunction will occur.

Diagnostic Code Chart

If a malfunction code is displayed during the diagnostic code check, check the circuit listed for that code in the table below (Proceed to the page given for that circuit).

Code No.	Diagnosis	Page
(Normal)*1	• Source voltage drop	AB-35
11	• Short in squib circuit or front airbag sensor circuit (to ground)	AB-37
12	• short in squib circuit or front airbag sensor circuit (to +B)	AB-43
13	• Short in squib circuit (between D^+ wire harness and D^- wire harness)	AB-48
14	• Open in squib circuit	AB-55
15	• Open in front airbag sensor circuit	AB-60
22*2	• Airbag warning light system malfunction	AB-65
31	• Center airbag sensor assembly malfunction	AB-71
41*3	• Malfunction stored in memory	AB-73

HINT:

*1 When the airbag warning light remains lit up and the diagnostic code is the normal code, this means a source voltage drop.

*2 Code 22 is recorded when a malfunction occurs in the airbag warning light system. If an open malfunction occurs in the airbag warning light system, the airbag warning light does not light up, so that until the malfunction is repaired, the diagnostic codes (including code 22) cannot be confirmed.

*3 When a malfunction occurs in the airbag system, malfunction codes 11 to 31 are output. After repairing the malfunction indicated by malfunction codes 11 to 31, codes 11 to 31 are cleared from the memory, but code 41 is output instead. Once the malfunction has been detected, the airbag warning light will remain lit up until code 41 is cleared, even though the malfunction has been repaired.

Problem Symptom Chart

Proceed with troubleshooting of each circuit in the table below.

Problem Symptom	Inspection Item	Page
• With the ignition switch at ACC or ON, the airbag warning light sometimes lights up after approx. 6 seconds have elapsed. • Airbag warning light lights up even when ignition switch is in the LOCK position.	• Airbag warning light system (Always lit up)	AB-75
• Diagnostic code not displayed. • Diagnostic code continuously displayed.	• Tc terminal circuit	AB-77

Circuit Inspection

Diag. Code	(Normal)	Source Voltage Drop

CIRCUIT DESCRIPTION

The airbag system is equipped with a voltage-increase circuit (DC-DC converter) in the center airbag sensor assembly in case the source voltage drops.
When the battery voltage drops, the voltage-increase circuit (DC-DC converter) functions to increase the voltage of the airbag system to normal voltage.
The diagnosis system malfunction display for this circuit is different to other circuits — when the airbag warning light remains lit up and the diagnostic code is a normal code, source voltage drop is indicated.
Malfunction in this circuit is not recorded in the center airbag sensor assembly, and approx. 10 seconds after the source voltage returns to normal, the airbag warning light automatically goes off.

Code No.	Diagnosis
(Normal)	Source voltage drop.

DIAGNOSTIC CHART

1 Preparation.

↓

2 Does airbag warning light turn off after approx. 10 seconds.

- No → Check diagnostic code, and if a malfunction code is output, perform troubleshooting according to malfunction code. If a normal code is output, replace center airbag sensor assembly.
- Yes ↓ Check battery and charging system (See page CH-1).

WIRING DIAGRAM

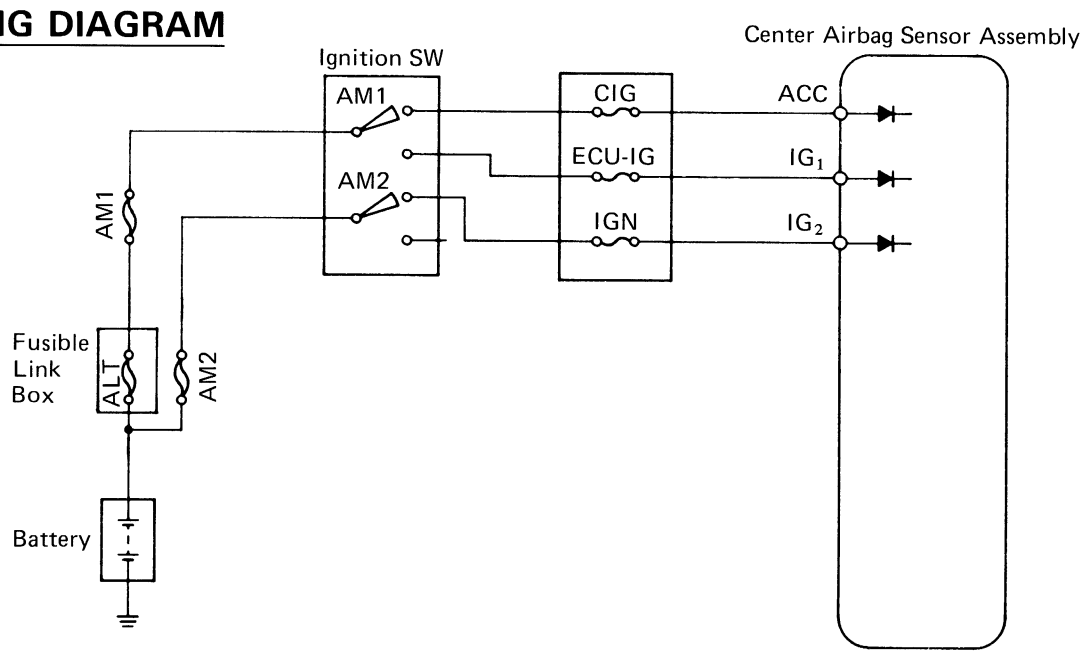

AB0242

INSPECTION PROCEDURES

P Preparation C Check

1 Preparation.

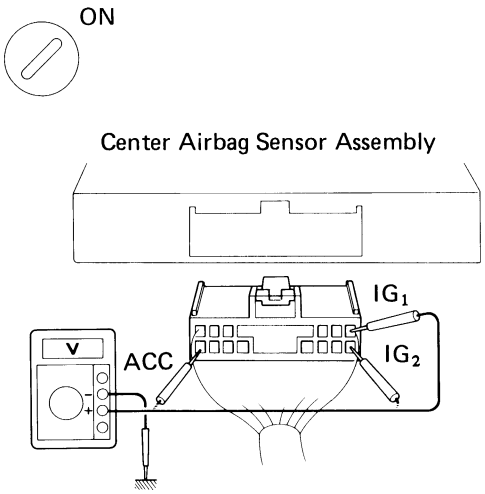

P
(1) Turn ignition switch LOCK.
(2) Disconnect center airbag sensor assembly connector.
(3) Turn ignition switch ON. But do not start engine.
(4) Measure voltage at IG_1, IG_2 or ACC on connector wire harness side of center airbag sensor assembly and operate electric system (deffoger, wiper, headlight, heater blower, etc.).
Voltage: 6V – 11.5V at IG_1, IG_2 and ACC.
(5) Turn electric system switch OFF.
(6) Turn ignition switch LOCK.
(7) Remove voltmeter and connect center airbag sensor assembly connector.

2 Does airbag warning light turn off after approx. 10 seconds.

P Turn ignition switch ON.

C Operate electric system checked in 1 (4) and check that airbag warning light goes off after approx. 10 seconds.

YES

NO

Check diagnostic code, and if a malfunction code is output, perform troubleshooting according to malfunction code. If a normal code is output, replace center airbag sensor assembly.

Check battery and charging system (See page CH-1).

Diag. Code	11	Short in Squib Circuit or Front Airbag Sensor Circuit (to Ground)

CIRCUIT DESCRIPTION

The squib circuit consists of the center airbag sensor assembly, spiral cable and the steering wheel pad (squib). It causes the airbag to deploy when the airbag deployment conditions are satisfied.
The front airbag sensor detects the deceleration force in a frontal collision and is located in the front fender on the left and right sides.
For details of the function of each component, see FUNCTION OF COMPONENTS on page AB-7.
Diagnostic code 11 is recorded when occurrence of ground short is detected in the squib circuit or front airbag sensor circuit.

Code No.	Diagnosis
11	· Short circuit in squib wire harness (to ground). · Squib malfunction. · Short circuit in front airbag sensor +S wire harness (to ground). · Front airbag sensor malfunction. · Short circuit between +S wire harness and –S wire harness of front airbag sensor. · Spiral cable malfunction. · Center airbag sensor assembly malfunction.

DIAGNOSTIC CHART

1 Preparation.

↓

2 Check front airbag sensor circuit. (Measure resistance between terminals +SR and –SR, +SL and –SL of center airbag sensor assembly connector.)
- NG → Go to step 7 on next page.
- OK ↓

3 Check front airbag sensor circuit. (Measure resistance between terminals + SR, +SL of center airbag sensor assembly connector and body ground.)
- NG → Repair or replace harness or connector between center airbag sensor assembly and front airbag sensor (See page AB-21).
- OK ↓

4 Check squib circuit.
- NG → Go to step 8 on next page.
- OK ↓

5 Check center airbag sensor assembly.
- NG → Replace center airbag sensor assembly.
- OK ↓

6 Check squib.
- NG → Replace steering wheel pad.
- OK ↓

From the results of the above inspection, the malfunctioning part can now be considered normal. To make sure of this, use the simulation method to check.

DIAGNOSTIC CHART (Cont'd)

7 Check front airbag sensor.

NG → Replace front airbag sensor.

OK ↓ Repair or replace harness or connector between center airbag sensor assembly and front airbag sensor (See page AB-21).

8 Check spiral cable.

NG → Repair or replace spiral cable.

OK ↓ Repair or replace harness or connector between center airbag sensor assembly and spiral cable.

WIRING DIAGRAM

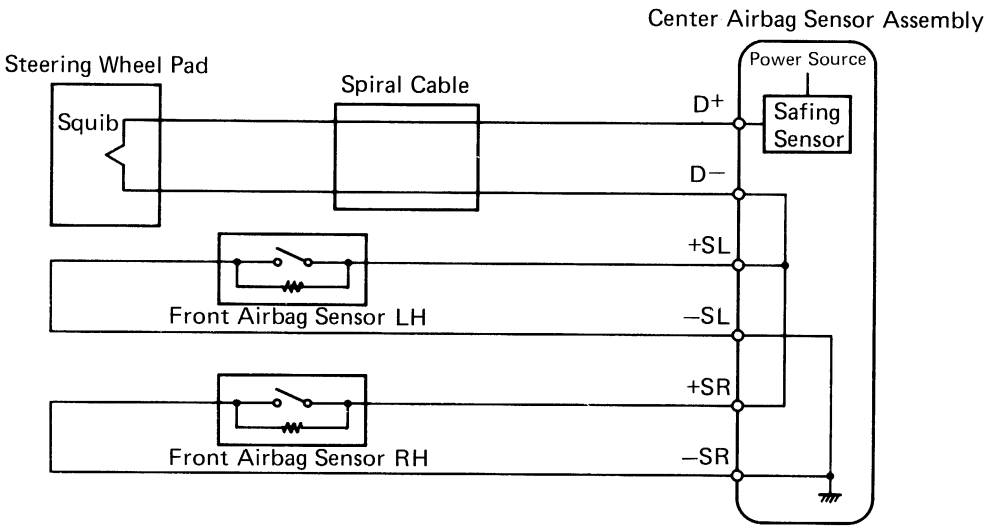

AB0190

INSPECTION PROCEDURES

P Preparation C Check

1 Preparation.

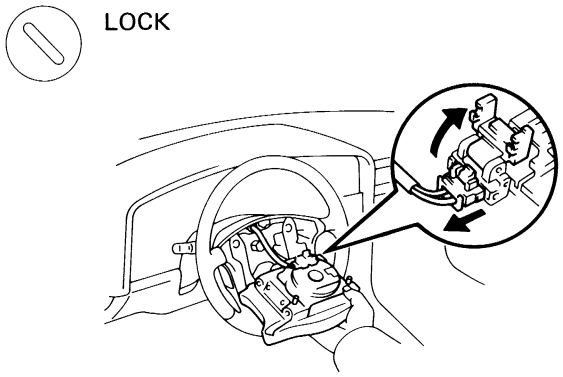

AB0117
AB0048

P (1) Disconnect battery negative (–) terminal cable, and wait at least 20 seconds.
(2) Remove steering wheel pad (See page AB-15).

Caution

When storing steering wheel pad, keep upper surface of the pad facing upward.

2 Check front airbag sensor circuit. (Measure resistance between terminals +SR and –SR, +SL and –SL of center airbag sensor assembly connector.)

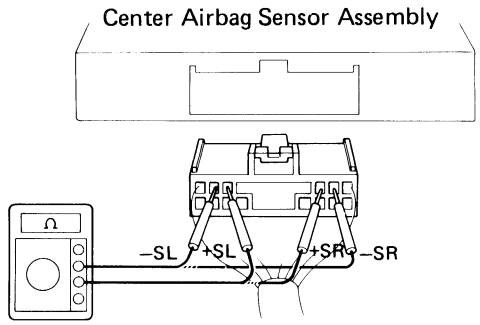

AB0032

P Disconnect center airbag sensor assembly connector.

C Measure resistance between terminals +SR and –SR, +SL and –SL of harness side connector of center airbag sensor assembly.

OK **Resistance: 755 Ω – 885 Ω**

OK

NG Go to step 7.

3 Check front airbag sensor circuit. (Measure resistance between terminals +SR, +SL of center airbag sensor assembly connector and body ground.)

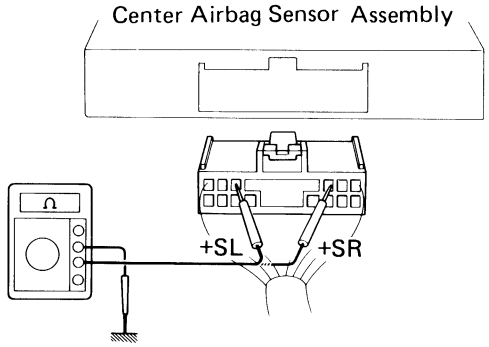

AB0033

C Measure resistance between terminals +SR, +SL of harness side connector of center airbag sensor assembly and body ground.

OK **Resistance: ∞ Ω**

OK

NG **Repair or replace harness or connector between center airbag sensor assembly and front airbag sensor (See page AB-21).**

4 Check squib circuit.

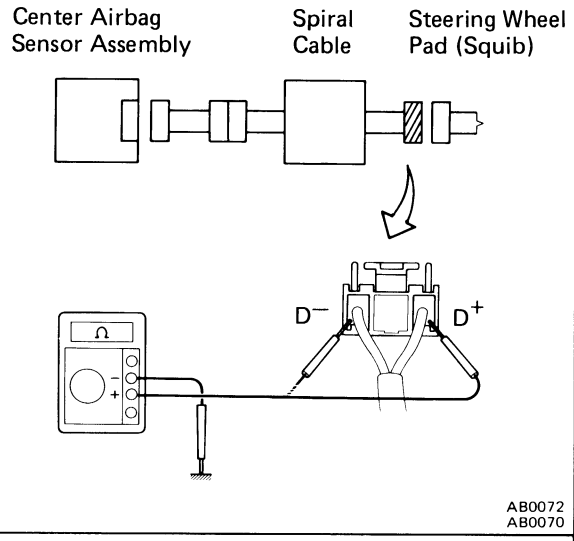

C Measure resistance between D^+, D^- on spiral cable side of connector between spiral cable and steering wheel pad and body ground.

OK **Resistance:** ∞ Ω

OK

NG Go to step **8**.

5 Check center airbag sensor assembly.

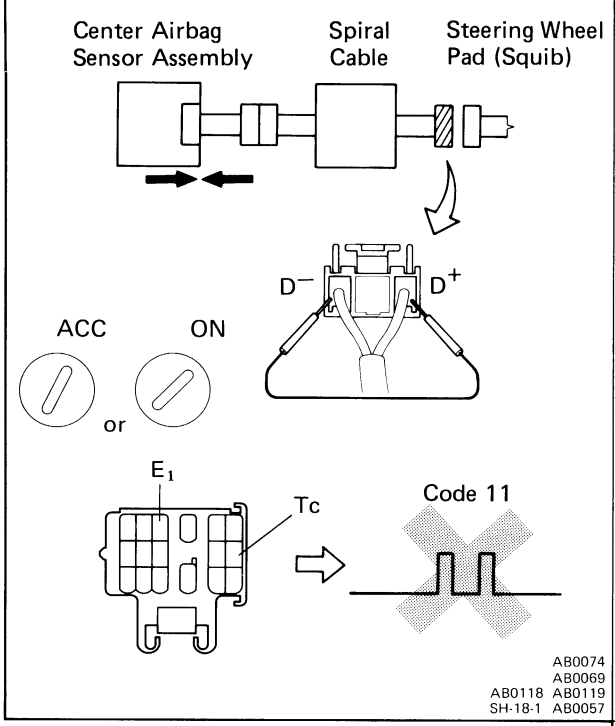

P
(1) Connect connector to center airbag sensor assembly.
(2) Using a service wire, connect D^+ and D^- on spiral cable side of connector between spiral cable and steering wheel pad.
(3) Connect negative (–) terminal cable to battery, and wait at least 2 seconds.

C
(1) Turn ignition switch ACC or ON and wait at least 20 seconds.
(2) Using SST, connect terminals Tc and E_1 of check connector.
SST 09843-18020
(3) Check diagnostic code.

OK **Diagnostic code 11 is not output.**

Hint Codes other than code 11 may be output at this time, but this is not relevant to this check.

OK

NG **Replace center airbag sensor assembly.**

6 Check squib.

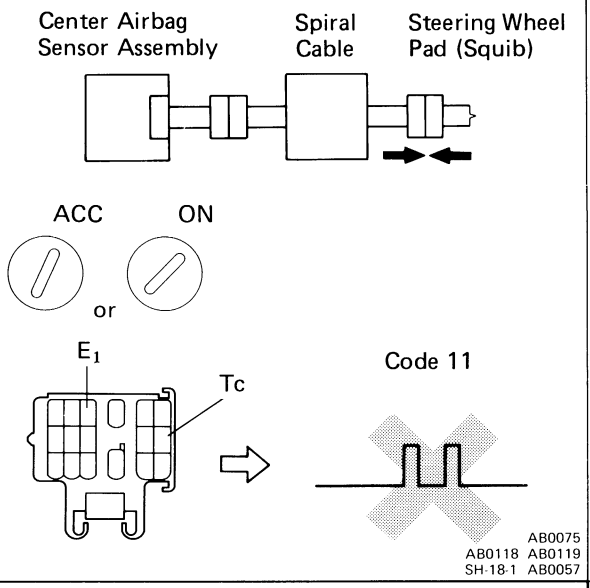

P (1) Turn ignition switch LOCK.
(2) Disconnect battery negative (–) terminal cable, and wait at least 20 seconds.
(3) Connect steering wheel pad (squib) connector.
(4) Connect negative (–) terminal cable to battery, and wait at least 2 seconds.

C (1) Turn ignition switch ACC or ON, and wait at least 20 seconds.
(2) Using SST, connect terminals Tc and E_1 of check connector.
SST 09843-18020
(3) Check diagnostic code.

OK **Diagnostic code 11 is not output.**

Hint Codes other than code 11 may be output at this time, but this is not relevant to this check.

OK

NG **Replace steering wheel pad.**

From the results of the above inspection, the malfunctioning part can now be considered normal. To make sure of this, use the simulation method to check.

7 Check front airbag sensor.

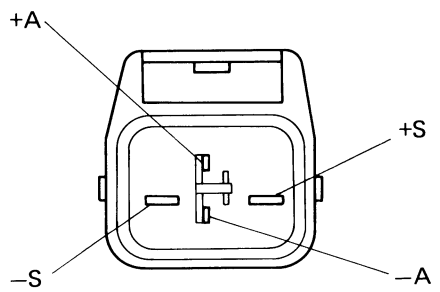

P Disconnect front airbag sensor connector.

C Measure resistance between each terminal of front airbag sensor.

OK

Terminal	Resistance
⊖S – ⊖A	755 Ω – 885 Ω
⊕S – ⊖S	∞
⊕S – ⊕A	Less than 1 Ω

Notice
- **Do not touch ohmmeter probes strongly against terminals of front airbag sensor.**
- **Make sure the front airbag sensor connector is properly connected.**

OK

NG **Replace front airbag sensor.**

Repair or replace harness or connector between center airbag sensor assembly and front airbag sensor (See page AB-21).

8 Check spiral cable.

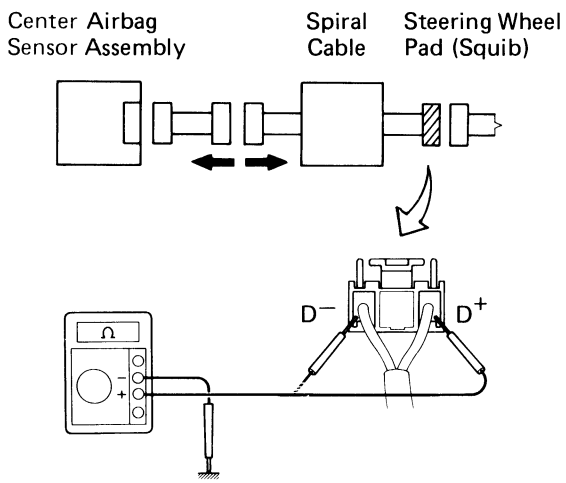

P Disconnect connector between center airbag sensor assembly and spiral cable.

C Measure resistance between D^+, D^- on spiral cable side of connector between spiral cable and steering wheel pad and body ground.

OK **Resistance:** ∞ Ω

NG **Repair or replace spiral cable.**

OK

Repair or replace harness or connector between center airbag sensor assembly and spiral cable.

Diag. Code	12	Short in Squib Circuit or Front Airbag Sensor Circuit (to +B)

CIRCUIT DESCRIPTION

The squib circuit consists of the center airbag sensor assembly, spiral cable and the steering wheel pad (squib). It causes the airbag to deploy when the airbag deployment conditions are satisfied.
The front airbag sensor detects the deceleration force in a frontal collision and is located in the front fender on the left and right sides.
For details of the function of each component, see FUNCTION OF COMPONENTS on page AB-7.
Diagnostic code 12 is recorded when a +B short is detected in the squib circuit or the front airbag sensor circuit.

Code No.	Diagnosis
12	· Short circuit in squib wire harness (to +B). · Squib malfunction. · Short circuit in front airbag sensor +S wire harness (to +B). · Open circuit in RH and LH front airbag sensor harness. · Spiral cable malfunction. · Center airbag sensor assembly malfunction.

DIAGNOSTIC CHART

1 Preparation.

↓

2 Check front airbag sensor circuit. (Measure resistance between terminals +SR and –SR, +SL and –SL of center airbag sensor assembly connector.)

NG → Go to Code 15 (See page AB-60).

↓ OK

3 Check front airbag sensor circuit. (Measure voltage between terminal +SR or +SL of center airbag sensor assembly connector and body ground.)

NG → Repair or replace harness or connector between center airbag sensor assembly and front airbag sensor (See page AB-21).

↓ OK

4 Check squib circuit.

NG → Go to step **7**.

↓ OK

5 Check center airbag sensor assembly.

NG → Replace center airbag sensor assembly.

↓ OK

6 Check squib.

NG → Replace steering wheel pad.

↓ OK

From the results of the above inspection, the malfunctioning part can now be considered normal. To make sure of this, use the simulation method to check.

7 Check spiral cable.

NG → Repair or replace spiral cable.

↓ OK

Repair or replace harness or connector between center airbag sensor assembly and spiral cable.

WIRING DIAGRAM

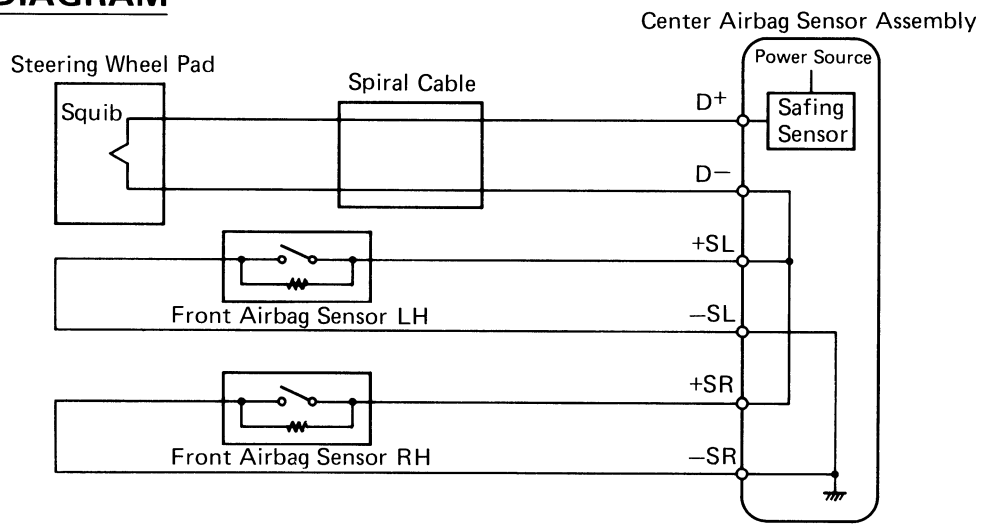

AB0190

INSPECTION PROCEDURES

P Preparation C Check

1 Preparation.

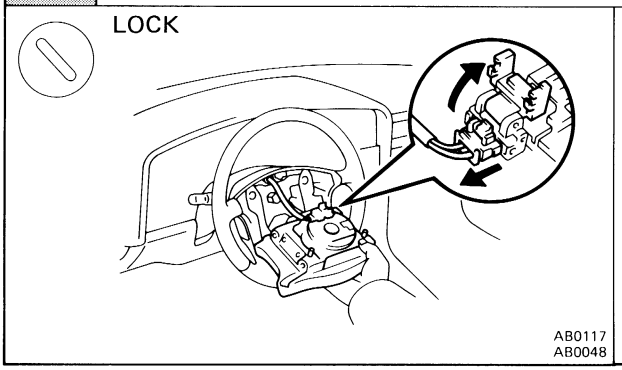

P (1) Disconnect battery negative (–) terminal cable, and wait at least 20 seconds.
(2) Remove steering wheel pad (See page AB-15).

Caution

When storing steering wheel pad, keep upper surface of the pad facing upward.

2 Check front airbag sensor circuit. (Measure resistance between terminals +SR and –SR, +SL and –SL of center airbag sensor assembly connector.)

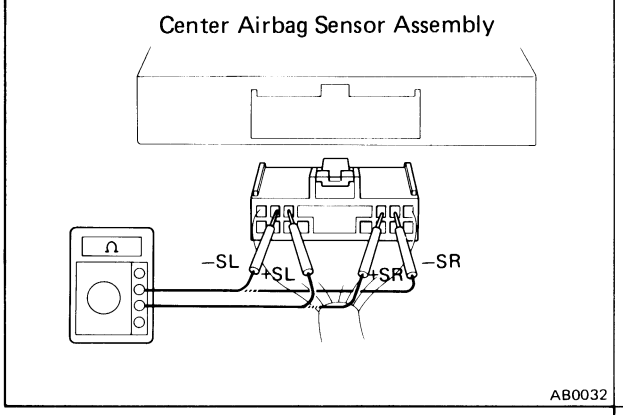

P Disconnect center airbag sensor assembly connector.

C Measure resistance between terminals +SR and –SR, +SL and –SL of harness side connector of center airbag sensor assembly.

OK **Resistance: 755 Ω – 885 Ω**

OK

NG **Go to Code 15 (See page AB-60).**

3 Check front airbag sensor circuit. (Measure voltage between terminal +SR or +SL of center airbag sensor assembly connector and body ground.)

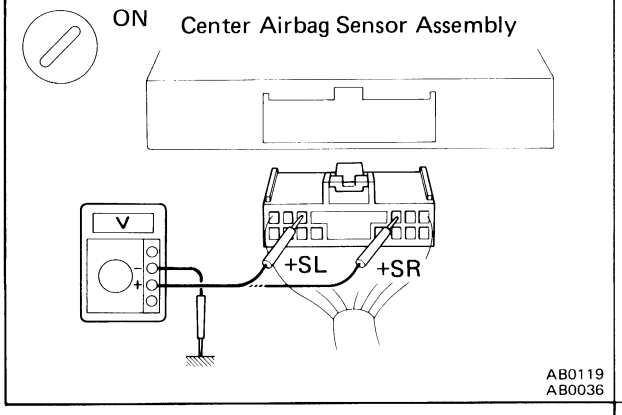

P (1) Connect negative (–) terminal cable to battery.
(2) Turn ignition switch ON.

C Measure voltage between terminals +SR or +SL of harness side connector of center airbag sensor assembly and body ground.

OK **Voltage: 0V**

OK

NG **Repair or replace harness or connector between center airbag sensor assembly and front airbag sensor (See page AB-21).**

4 Check squib circuit.

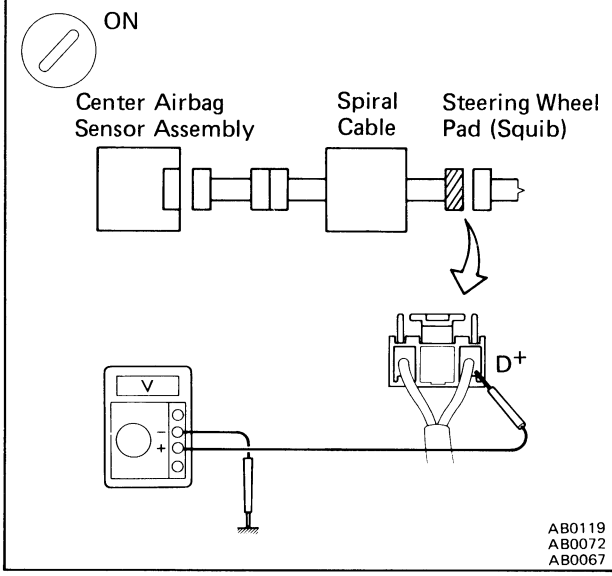

C Measure voltage at D^+ on spiral cable side of connector between spiral cable and steering wheel pad.

OK **Voltage: 0V**

OK

NG Go to step **7**.

5 Check center airbag sensor assembly.

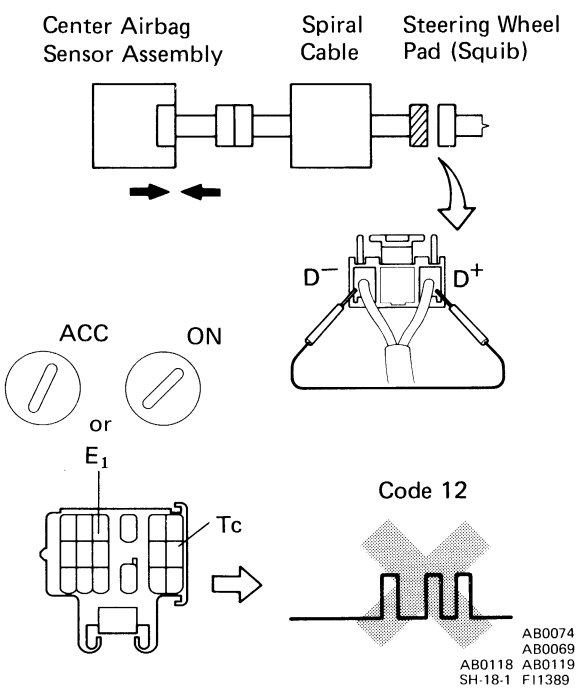

P
(1) Turn ignition switch LOCK.
(2) Disconnect negative (–) terminal cable from battery.
(3) Connect connector to center airbag sensor assembly.
(4) Using a service wire, connect D^+ and D^- on spiral cable side of connector between spiral cable and steering wheel pad.
(5) Connect negative (–) terminal cable to battery, and wait at least 2 seconds.

C
(1) Turn ignition switch ACC or ON, and wait at least 20 seconds.
(2) Using SST, connect terminals Tc and E_1 of check connector.
SST 09843-18020
(3) Check diagnostic code.

OK **Diagnostic code 12 is not output.**

Hint Codes other than code 12 may be output at this time, but this is not relevant to this check.

OK

NG **Replace center airbag sensor assembly.**

6 Check squib.

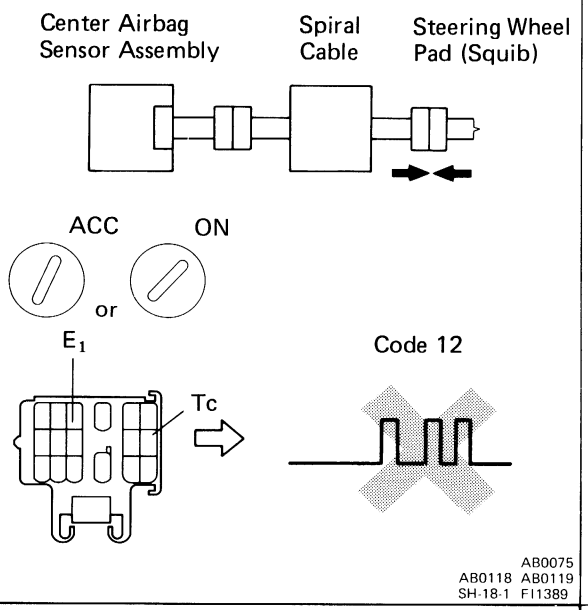

P
(1) Turn ignition switch LOCK.
(2) Disconnect battery negative (–) terminal cable, and wait at least 20 seconds.
(3) Connect steering wheel pad (squib) connector.
(4) Connect negative (–) terminal cable to battery, and wait at least 2 seconds.

C
(1) Turn ignition switch ACC or ON, and wait at least 20 seconds.
(2) Using SST, connect terminals Tc and E_1 of check connector.
SST 09843-18020
(3) Check diagnostic code.

OK **Diagnostic code 12 is not output.**

Hint Codes other than code 12 may be output at this time, but this is not relevant to this check.

OK

NG **Replace steering wheel pad.**

From the results of the above inspection, the malfunctioning part can now be considered normal. To make sure of this, use the simulation method to check.

7 Check spiral cable.

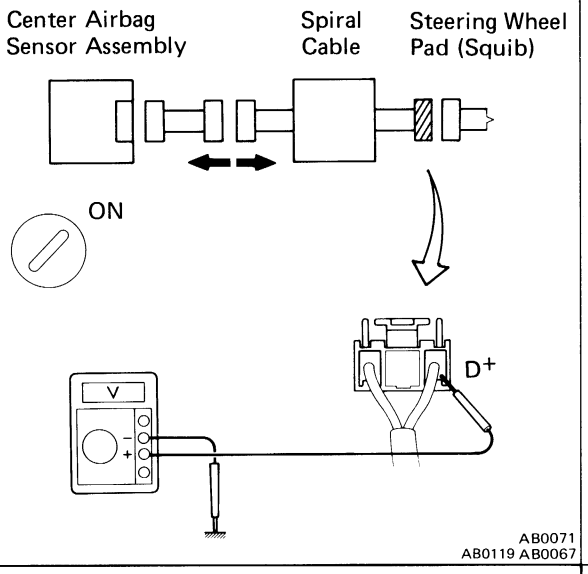

P
(1) Turn ignition switch LOCK.
(2) Disconnect connector between center airbag sensor assembly and spiral cable.
(3) Turn ignition switch ON.

C Measure voltage at D^+ on spiral cable side of connector between spiral cable and steering wheel pad.

OK **Voltage: 0 V**

OK

NG **Repair or replace spiral cable.**

Repair or replace harness or connector between center airbag sensor assembly and spiral cable.

Diag. Code	13	Short in Squib Circuit (Between D^+ Wire Harness and D^- Wire Harness)

CIRCUIT DESCRIPTION

The squib circuit consists of the center airbag sensor assembly, spiral cable and the steering wheel pad (squib). It causes the airbag to deploy when the airbag deployment conditions are satisfied.
For details of the function of each component, see FUNCTION OF COMPONENTS on page AB-7.
Diagnostic code 13 is recorded when a short is detected in the D^+ wire harness and D^- wire harness of the squib circuit.

Code. No.	Diagnosis
13	· Short circuit between D^+ wire harness and D^- wire harness of squib. · Squib malfunction. · Spiral cable malfunction. · Center airbag sensor assembly malfunction.

DIAGNOSTIC CHART

1 Preparation.

↓

2 Check squib circuit. — NG → Go to step **5** on next page.

↓ OK

3 Check center airbag sensor assembly. — NG → Replace center airbag sensor assembly.

↓ OK

4 Check squib. — NG → Replace steering wheel pad.

↓ OK

From the results of the above inspection, the malfunctioning part can now be considered normal. To make sure of this, use the simulation method to check.

DIAGNOSTIC CHART (Cont'd)

5 Check spiral cable.
- NG → Repair or replace spiral cable.
- OK ↓

6 Check harness between center airbag sensor assembly and spiral cable.
- NG → Repair or replace harness or connector between center airbag sensor assembly and spiral cable.
- OK ↓

7 Check center airbag sensor assembly.
- NG → Replace center airbag sensor assembly.
- OK ↓

From the results of the above inspection, the malfunctioning part can now be considered normal. To make sure of this, use the simulation method to check.

WIRING DIAGRAM

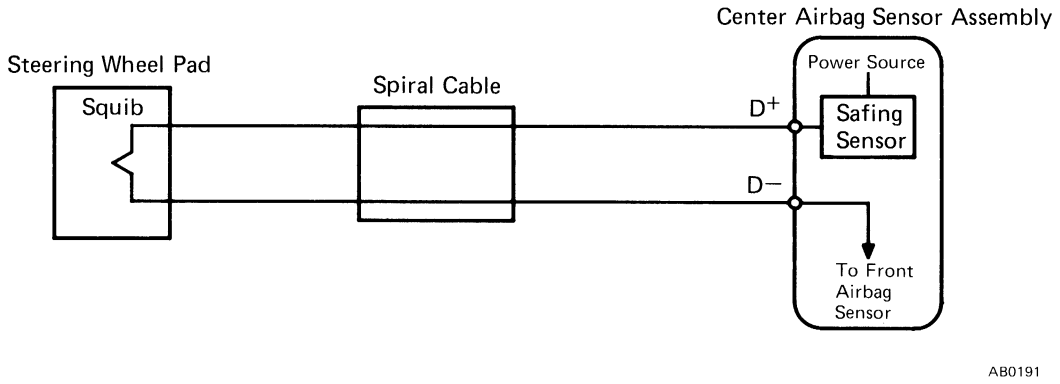

INSPECTION PROCEDURES

P Preparation C Check

1 Preparation.

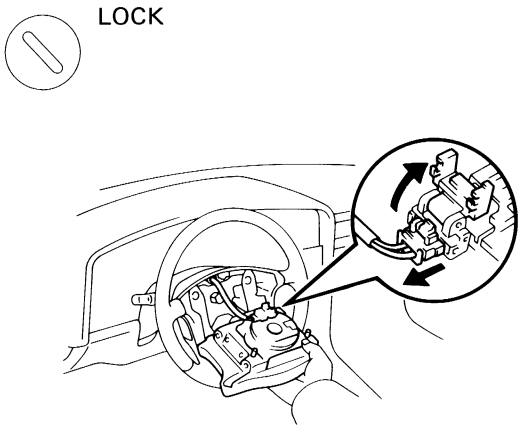

AB0117
AB0048

P (1) Disconnect battery negative (–) terminal cable, and wait at least 20 seconds.
(2) Remove steering wheel pad (See page AB-15).

Caution

When storing steering wheel pad, keep upper surface of the pad facing upward.

2 Check squib circuit.

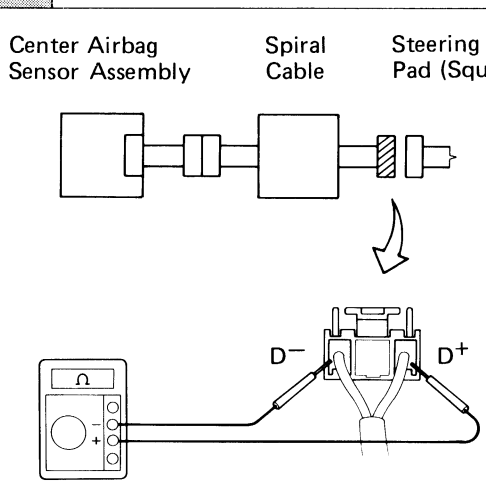

AB0074
AB0068

C Measure resistance between D^+ and D^- on spiral cable side of connector between spiral cable and steering wheel pad.

OK **Resistance: 40 kΩ or more**

OK

NG Go to step 5.

3 Check center airbag sensor assembly.

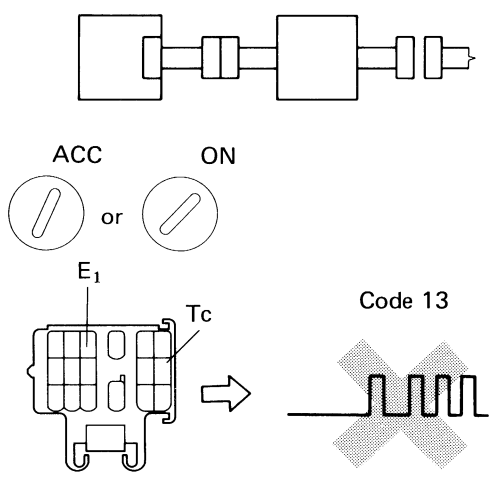

P
(1) Connect negative (–) terminal cable to battery.
(2) Clear malfunction code 41 stored in memory (See page AB-31).

C
(1) Turn ignition switch LOCK, and wait at least 2 seconds.
(2) Turn ignition switch ACC or ON, and wait at least 20 seconds.
(3) Using SST, connect terminals Tc and E_1 of check connector.
SST 09843-18020
(4) Check diagnostic code.

OK **Diagnostic code 13 is not output.**

Hint Codes other than code 13 may be output at this time, but this is not relevant to this check.

OK

NG **Replace center airbag sensor assembly.**

4 Check squib.

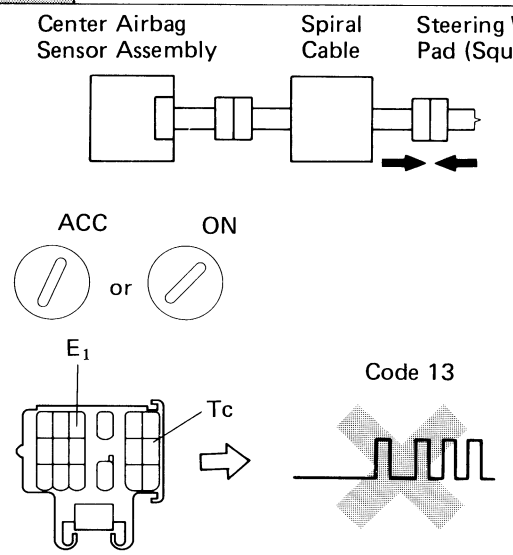

P
(1) Turn ignition switch LOCK.
(2) Disconnect battery negative (–) terminal cable, and wait at least 20 seconds.
(3) Connect steering wheel pad (squib) connector.
(4) Connect negative (–) terminal cable to battery.
(5) Clear malfunction code 41 stored in memory (See page AB-31).

C
(1) Turn ignition switch LOCK, and wait at least 2 seconds.
(2) Turn ignition switch ACC or ON, and wait at least 20 seconds.
(3) Using SST, connect terminals Tc and E_1 of check connector.
SST 09843-18020
(4) Check diagnostic code.

OK **Diagnostic code 13 is not output.**

Hint Codes other than code 13 may be output at this time, but this is not relevant to this check.

OK

NG **Replace steering wheel pad.**

From the results of the above inspection, the malfunctioning part can now be considered normal. To make sure of this, use the simulation method to check.

5 Check spiral cable.

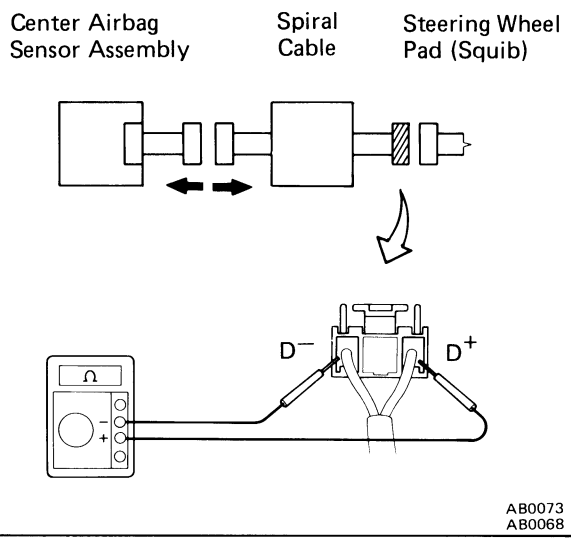

P (1) Disconnect connector between center airbag sensor assembly and spiral cable.
(2) Release airbag activation prevention mechanism on center airbag sensor assembly side of spiral cable connector (See page AB-54).

C Measure resistance between D^+ and D^- on spiral cable side of connector between spiral cable and steering wheel pad.

OK **Resistance:** ∞ Ω

OK

NG **Repair or replace spiral cable.**

6 Check harness between center airbag sensor assembly and spiral cable.

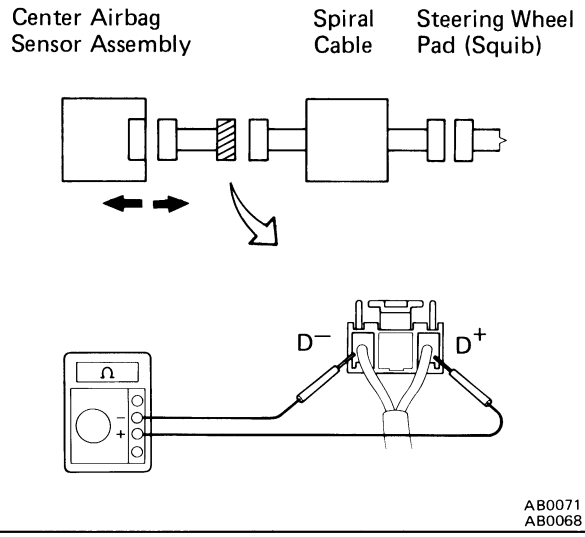

P (1) Disconnect center airbag sensor assembly connector.
(2) Release airbag activation prevention mechanism on center airbag sensor assembly connector (See page AB-54).

C Measure resistance between D^+ and D^- on center airbag sensor assembly side of connector between center airbag sensor assembly and spiral cable.

OK **Resistance:** ∞ Ω

OK

NG **Repair or replace harness or connector between center airbag sensor assembly and spiral cable.**

7 Check center airbag sensor assembly.

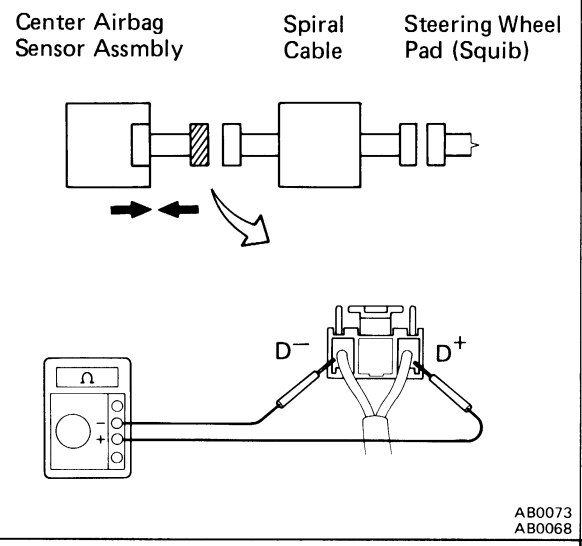

P Connect center airbag sensor assembly connector.

C Measure resistance between D^+ and D^- on center airbag sensor assembly side of connector between center airbag sensor assembly and spiral cable.

OK **Resistance: 40 kΩ or more**

OK

NG **Replace center airbag sensor assembly.**

From the results of the above inspection, the malfunctioning part can now be considered normal. To make sure of this, use the simulation method to check.

RELEASE METHOD OF AIRBAG ACTIVATION PREVENTION MECHANISM

An airbag activation prevention mechanism is built into the connector for the squib circuit of the airbag system. When release of the airbag activation prevention mechanism is directed in the troubleshooting procedure, as shown in the illustration of the connectors ① and ② below, insert paper which is the same thickness as the male terminal, between the terminal and the short spring.

CAUTION:

- **NEVER RELEASE the airbag activation prevention mechanism on the steering wheel pad connector.**

NOTICE:

- **Do not release the airbag activation prevention mechanism unless specifically directed by the troubleshooting procedure.**
- **If the paper inserted is too thick the terminal and short spring may be damaged, so always use paper the same thickness as the male terminal.**

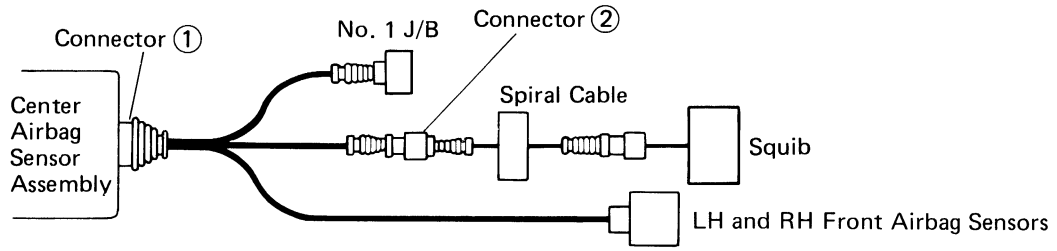

AB0027

Center Airbag Sensor Assembly Connector (Connector ①)

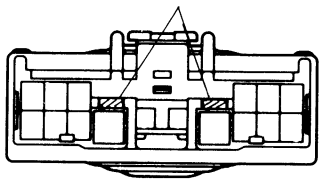

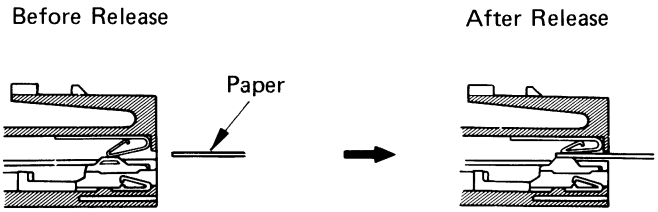

AB0131 AB0042 AB0043

Spiral Cable Connector (Connector ②)

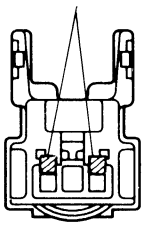

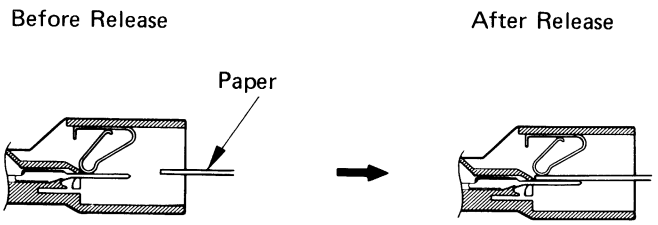

AB0130 AB0045 AB0046

Diag. Code	14	Open in Squib Circuit

CIRCUIT DESCRIPTION

The squib circuit consists of the center airbag sensor assembly, spiral cable and the steering wheel pad (squib). It causes the airbag to deploy when the airbag deployment conditions are satisfied.
For details of the function of each component, see FUNCTION OF COMPONENTS on page AB-7.
Diagnostic code 14 is recorded when an open is detected in the squib circuit.

Code. No.	Diagnosis
14	· Open circuit in D^+ wire harness or D^- wire harness of squib. · Squib malfunction. · Spiral cable malfunction. · Center airbag sensor assembly malfunction.

DIAGNOSTIC CHART

1 Preparation.

↓

2 Check squib circuit. — OK → Go to step **5**.

↓ NG

3 Check spiral cable. — NG → Repair or replace spiral cable.

↓ OK

4 Check harness between center airbag sensor assembly and spiral cable. — NG → Repair or replace harness or connector between center airbag sensor assembly and spiral cable.

↓ OK

5 Check center airbag sensor assembly. — NG → Replace center airbag sensor assembly.

↓ OK

6 Check squib. — NG → Replace steering wheel pad.

↓ OK

From the results of the above inspection, the malfunctioning part can now be considered normal. To make sure of this, use the simulation method to check.

WIRING DIAGRAM

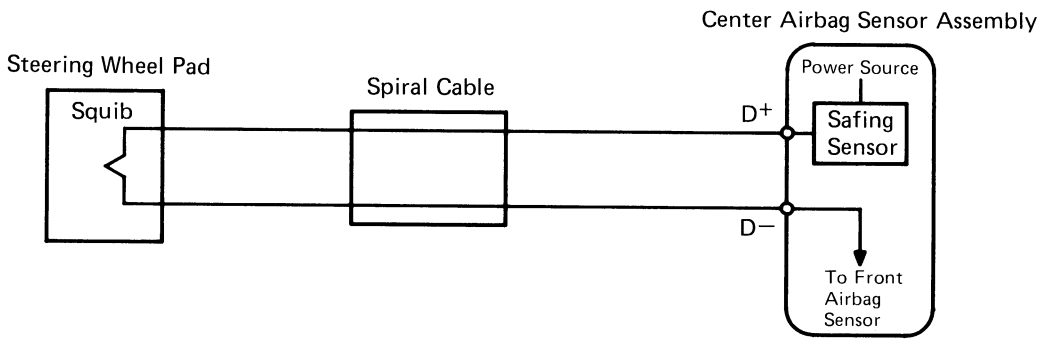

AB0191

INSPECTION PROCEDURES

P Preparation C Check

1 Preparation.

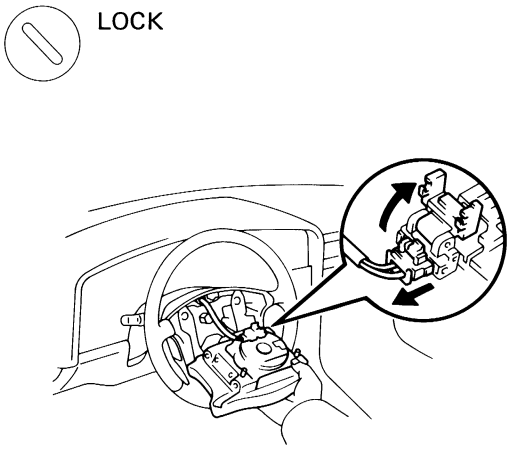

AB0117
AB0048

P (1) Disconnect battery negative (–) terminal cable, and wait at least 20 seconds.
(2) Remove steering wheel pad (See page AB-15).

Caution

When storing steering wheel pad, keep upper surface of the pad facing upward.

2 Check squib circuit.

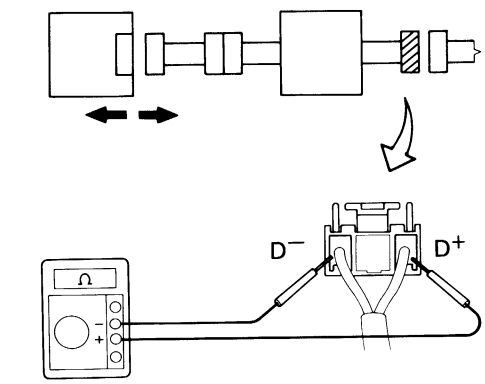

AB0072
AB0068

P Disconnect center airbag sensor assembly connector.

C Measure resistance between D^+ and D^- on spiral cable side of connector between spiral cable and steering wheel pad.

OK **Resistance: Less than 1 Ω**

OK Go to step 5.

NG

3 Check spiral cable.

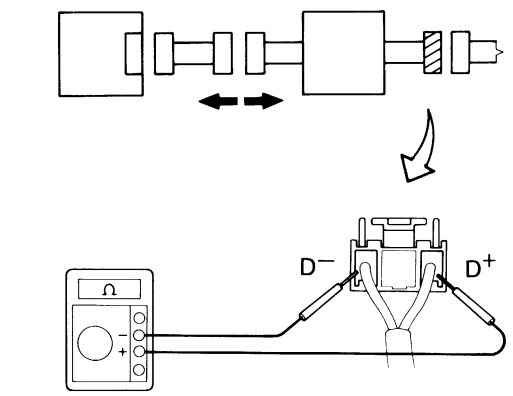

P Disconnect connector between center airbag sensor assembly and spiral cable.

C Measure resistance between D^+ and D^- on spiral cable side of connector between spiral cable and steering wheel pad.

OK **Resistance: Less than 1 Ω**

OK

NG **Repair or replace spiral cable.**

4 Check harness between center airbag sensor assembly and spiral cable.

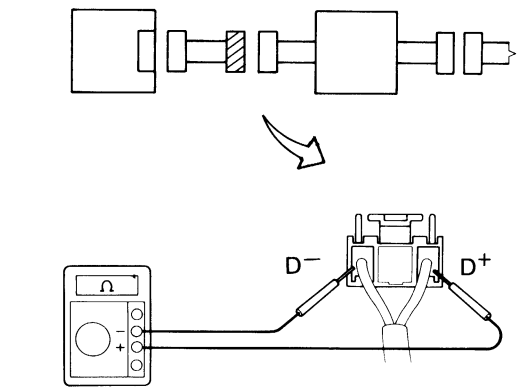

C Measure resistance between D^+ and D^- on center airbag sensor assembly side of connector between center airbag sensor assembly and spiral cable.

OK **Resistance: Less than 1 Ω**

OK

NG **Repair or replace harness or connector between center airbag sensor assembly and spiral cable.**

5 Check center airbag sensor assembly.

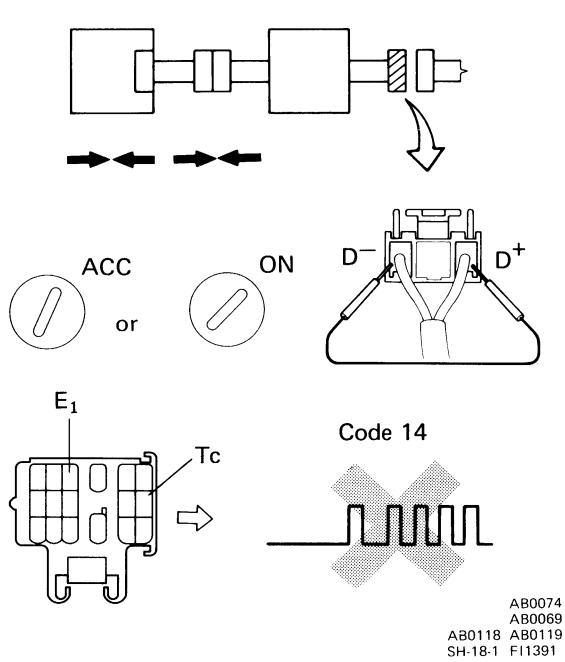

P (1) Connect connector to center airbag sensor assembly.
(2) Connect connector between center airbag sensor assembly and spiral cable.
(3) Using a service wire, connect D^+ and D^- on spiral cable side of connector between spiral cable and steering wheel pad.
(4) Connect negative (–) terminal cable to battery, and wait at least 2 seconds.

C (1) Turn ignition switch ACC or ON, and wait at least 20 seconds.
(2) Using SST, connect terminals Tc and E_1 of check connector.
SST 09843-18020
(3) Check diagnostic code.

OK **Diagnostic code 14 is not output.**

Hint Codes other than code 14 may be output at this time, but this is not relevant to this check.

OK

NG **Replace center airbag sensor assembly.**

6 Check squib.

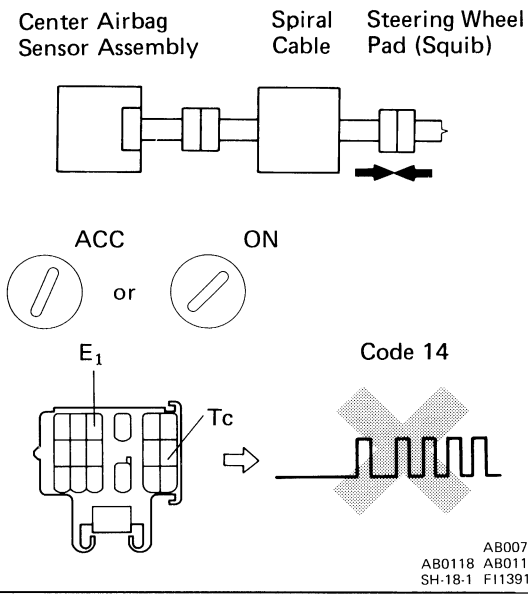

P (1) Turn ignition switch LOCK.
(2) Disconnect battery negative (–) terminal cable, and wait at least 20 seconds.
(3) Connect steering wheel pad (squib) connector.
(4) Connect negative (–) terminal cable to battery, and wait at least 2 seconds.

C (1) Turn ignition switch ACC or ON, and wait at least 20 seconds.
(2) Using SST, connect terminals Tc and E_1 of check connector.
SST 09843-18020
(3) Check diagnostic code.

OK **Diagnostic code 14 is not output.**

Hint Codes other than code 14 may be output at this time, but this is not relevant to this check.

OK

NG **Replace steering wheel pad.**

From the results of the above inspection, the malfunctioning part can now be considered normal. To make sure of this, use the simulation method to check.

Diag. Code	15	Open in Front Airbag Sensor Circuit

CIRCUIT DESCRIPTION

The front airbag sensor detects the deceleration force in a frontal collision and is located in the front fender on the left and right sides.
For details of the function of each component, see FUNCTION OF COMPONENTS on page AB-7.
Diagnostic code 15 is recorded when an open is detected in the front airbag sensor circuit.

NOTICE: The front airbag sensor connector is equipped with an electrical connection check mechanism for the purpose of detecting an open in the front airbag sensor (See page AB-9). This mechanism is constructed so that when the terminals of the front airbag sensor have been connected (when the connector housing lock is in the locked condition), the connection detection pin on the wire harness side connects with the terminals for diagnosis use on the sensor side. If the connector is not properly connected, the diagnosis system may detect only a malfunction code, even though the airbag system is functioning normally.
When connecting the front airbag sensor connector, make sure it is connected properly. If diagnostic code 15 is displayed after the front airbag sensor connector has been connected, check again that it is properly connected.

Code No.	Diagnosis
15	· Open circuit in +S wire harness or –S wire harness of front airbag sensor. · Front airbag sensor malfunction. · Malfunction of electrical connection check mechanism of front airbag sensor. · Center airbag sensor assembly malfunction.

DIAGNOSTIC CHART

1 Preparation.

↓

2 Check front airbag sensor circuit (Measure resistance between terminals +SR and –SR, +SL and –SL of center airbag sensor assembly connector).

NG → Go to step **4**.

OK ↓

3 Check center airbag sensor assembly.

NG → Replace center airbag sensor assembly.

OK ↓

From the results of the above inspection, the malfunctioning part can now be considered normal. To make sure of this, use the simulation method to check.

4 Check front airbag sensor.

NG → Replace front airbag sensor.

OK ↓

5 Check harness between center airbag sensor assembly and front airbag sensor.

NG → Repair or replace harness or connector between center airbag sensor assembly and front airbag sensor (See page AB-21).

OK ↓

Replace front airbag sensor connector (See page AB-21).

WIRING DIAGRAM

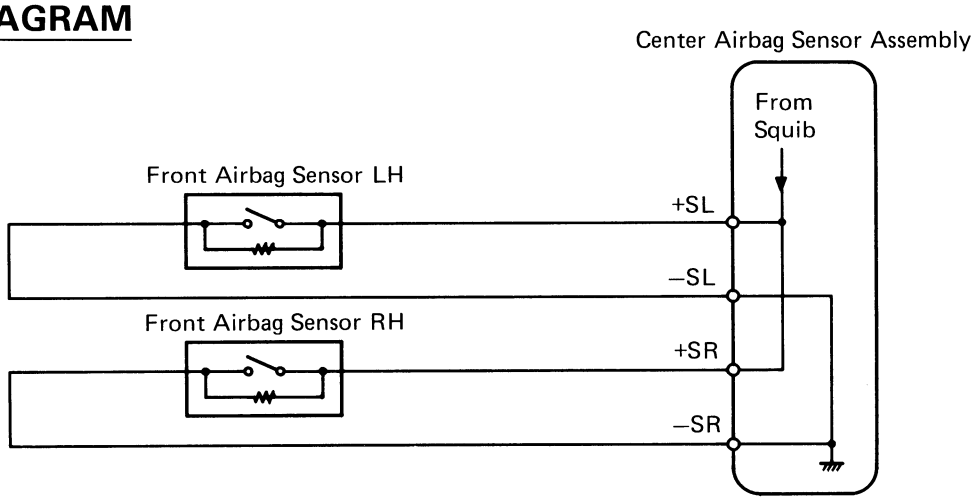

AB0192

INSPECTION PROCEDURES

P Preparation C Check

1 Preparation.

LOCK

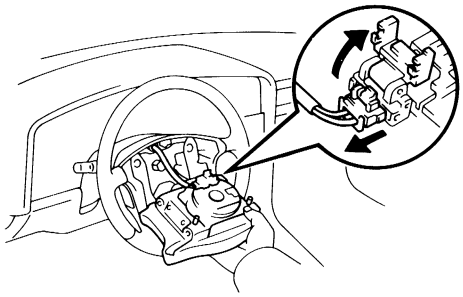

AB0117
AB0048

P (1) Disconnect battery negative (–) terminal cable, and wait at least 20 seconds.
(2) Remove steering wheel pad (See page AB-15).

Caution

When storing steering wheel pad, keep upper surface of pad facing upward.

2 Check front airbag sensor circuit (Measure resistance between terminals +SR and –SR, +SL and –SL of center airbag sensor assembly connector.).

Center Airbag Sensor Assembly

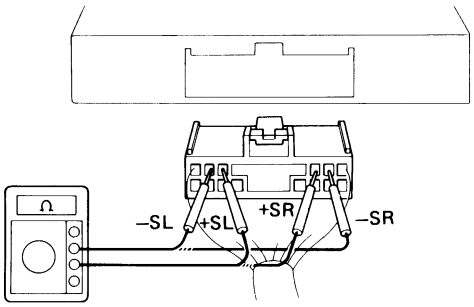

AB0032

P Disconnect center airbag sensor assembly connector.

C Measure resistance between terminals +SR and –SR, +SL and –SL of harness side connector of center airbag sensor assembly.

OK **Resistance: 755 Ω – 885 Ω**

OK

NG Go to step **4**.

3 Check center airbag sensor assembly.

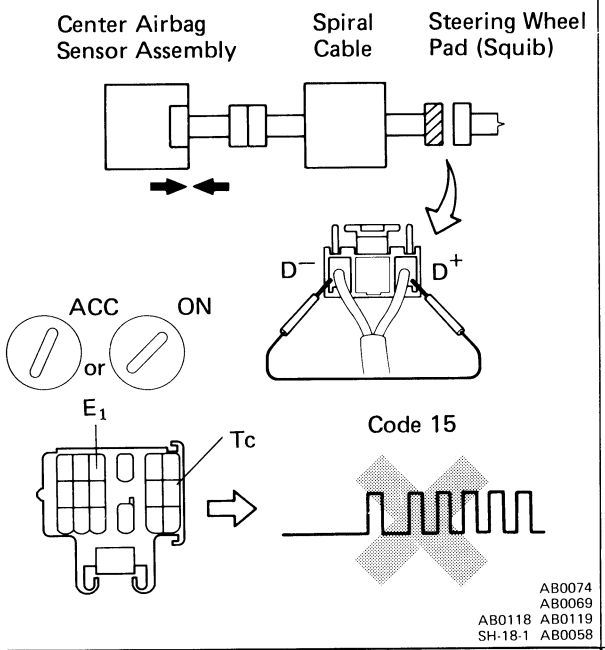

P (1) Connect connector to center airbag sensor assembly.
(2) Using a service wire, connect D^+ and D^- on spiral cable side of connector between spiral cable and steering wheel pad.
(3) Connect negative (–) terminal cable to battery, and wait at least 2 seconds.

C (1) Turn ignition switch ACC or ON, and wait at least 20 seconds.
(2) Using SST, connect terminals Tc and E_1 of check connector.
SST 09843-18020
(3) Check diagnostic code.

OK **Diagnostic code 15 is not output.**

Hint Codes other than code 15 may be output at this time, but this is not relevant to this check.

NG **Replace center airbag sensor assembly.**

OK

From the results of the above inspection, the malfunctioning part can now be considered normal. To make sure of this, use the simulation method to check.

4 Check front airbag sensor.

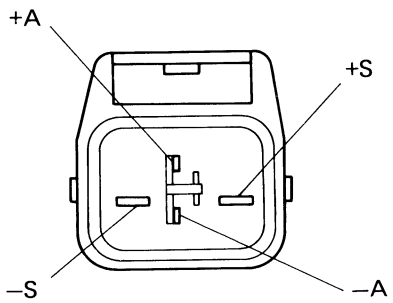

P Disconnect front airbag sensor connector.

C Measure resistance between each terminal of front airbag sensor.

OK

Terminal	Resistance
⊖S – ⊖A	755 Ω – 885 Ω
⊕S – ⊖S	∞
⊕S – ⊕A	Less than 1 Ω

Notice
- **Do not touch ohmmeter probes strongly against terminals of front airbag sensor.**
- **Make sure the front airbag sensor connector is properly connected.**

NG **Replace front airbag sensor.**

OK

5 Check harness between center airbag sensor assembly and front airbag sensor.

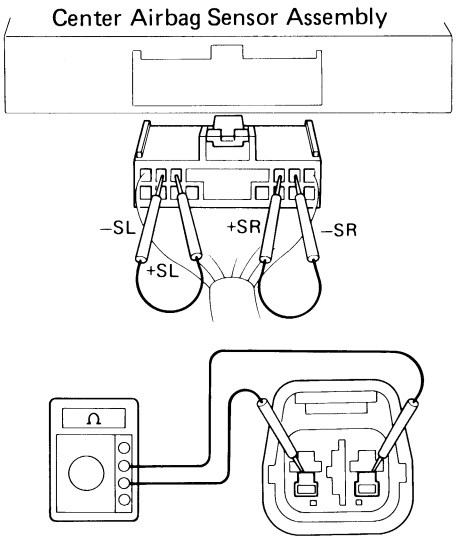

P (1) Disconnect center airbag sensor assembly connector.
(2) Using service wires, connect +SR and –SR, +SL and –SL on the wire harness side of the center airbag sensor assembly connector.

C Measure resistance between terminals +SR and –SR, +SL and –SL of harness side connector of front airbag sensor.

OK **Resistance: Less than 1 Ω**

Notice

- **Lightly touch ohmmeter probes at position shown in illustration.**
- **Make sure the front airbag sensor connector is properly connected.**

OK

NG **Repair or replace harness or connector between center airbag sensor assembly and front airbag sensor (See page AB-21).**

Replace front airbag sensor connector (See page AB-21)

Diag. Code	22	Airbag Warning Light System Malfunction

CIRCUIT DESCRIPTION

The airbag warning light is located on the combination meter.
When the airbag system is normal, the airbag warning light lights up for approx. 6 seconds after the ignition switch is turned from LOCK position to ACC or ON position, and then turns off automatically.
If there is a malfunction in the airbag system, the airbag warning light lights up to inform the driver of the abnormality.
When terminals Tc and E_1 of the check connector are connected, the diagnostic code is displayed by the blinking of the airbag warning light.
The airbag warning light circuit is equipped with an electrical connection check mechanism which detects when the connector to the center airbag sensor assembly is not properly connected.
If the connector to the center airbag sensor assembly is not properly connected, the airbag warning light will not light up.
Diagnostic code 22 is recorded when a malfunction occurs in the airbag warning light system.
If an OPEN malfunction occurs in the airbag warning light system, the airbag warning light does not light up, so that until the malfunction is repaired, the diagnostic codes (including code 22) cannot be confirmed.

Code No.	Diagnosis
22	· Open circuit in airbag warning light system. · Center airbag sensor assembly malfunction.

DIAGNOSTIC CHART

Troubleshooting for this system is different for when the airbag warning light does not light up and for when diagnostic code 22 is output. Confirm the problem symptoms first before selecting the appropriate troubleshooting procedure.

HINT: If airbag warning light does not light up, perform the following troubleshooting:

1 Check ECU-B fuse.
- NG → Go to step **6**.
- OK ↓

2 Check connection of center airbag sensor assembly connector.
- NG → Repair.
- OK ↓

3 Preparation.
↓

4 Check airbag warning light circuit.
- NG → Repair airbag warning light circuit (See page BE-36).
- OK ↓

5 Does airbag warning light comes on?
- NO → Check terminal LA of center airbag sensor assembly and electrical connection check mechanism. If normal, replace center airbag sensor assembly.
- YES ↓

From the results of the above inspection, the malfunctioning part can now be considered normal. To make sure of this, use the simulation method to check.

6 Is new ECU-B fuse burnt out again?
- NO → Using simulation method, reproduce malfunction symptoms (See page AB-32).
- YES ↓

Check harness between ECU-B fuse and airbag warning light, and ECU-B fuse and center airbag sensor assembly.

DIAGNOSTIC CHART

HINT: If diagnostic code 22 is output, perform the following troubleshooting:

1 Is diagnostic code 22 output again?

NO → Using simulation method, reproduce malfunction symptoms (See page AB-32).

YES ↓ Replace center airbag sensor assembly.

WIRING DIAGRAM

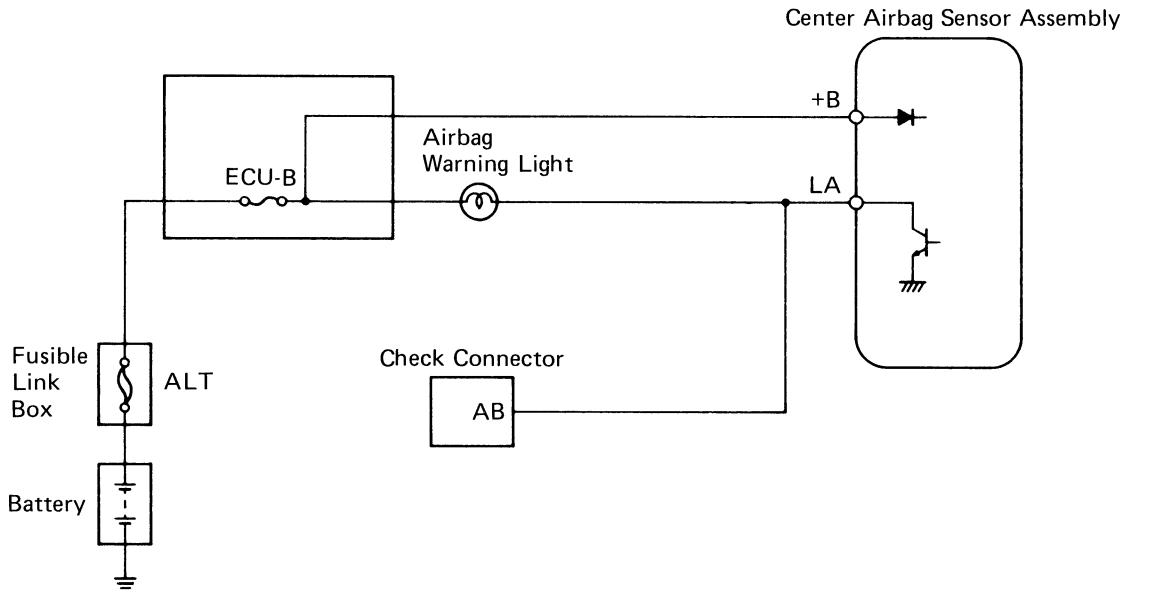

INSPECTION PROCEDURES

P Preparation C Check

HINT: If airbag warning light does not light up, perform the following troubleshooting:

1 Check ECU-B fuse.

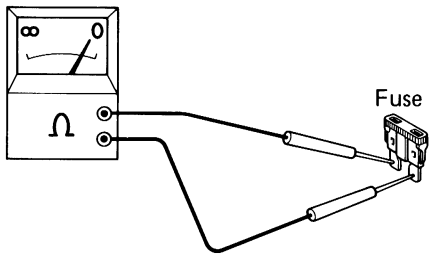

F10044

P Remove ECU-B fuse.

C Check continuity of ECU-B fuse.

OK **Continuity.**

Hint · Fuse may be burnt out even if it appears to be OK during visual inspection.
· If fuse is OK, install it.

OK

NG Go to step 6.

2 Check connection of center airbag sensor assembly connector.

OK

NG Repair.

3 Preparation.

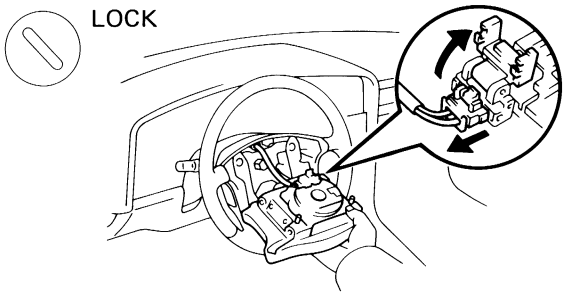

AB0117
AB0048

P (1) Disconnect battery negative (–) terminal cable, and wait at least 20 seconds.
(2) Remove steering wheel pad (See page AB-15).

Caution
When storing steering wheel pad, keep upper surface of pad facing upward.

4 Check airbag warning light circuit.

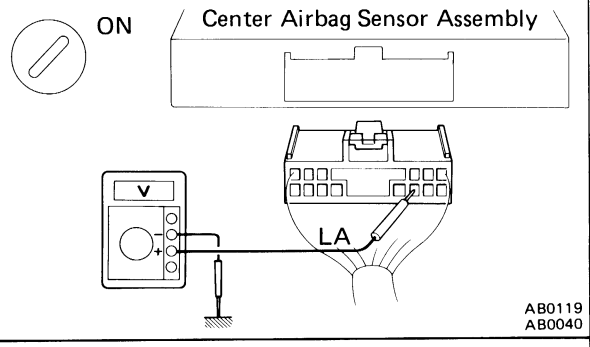

P (1) Disconnect center airbag sensor assembly connector.
(2) Connect negative (–) terminal cable to battery.
(3) Turn ignition switch ACC or ON.

C Measure voltage LA terminal of harness side connector of center airbag sensor assembly.

OK **Voltage: Battery voltage.**

OK

NG **Repair airbag warning light circuit (See page BE-36).**

5 Does airbag warning light comes on ?

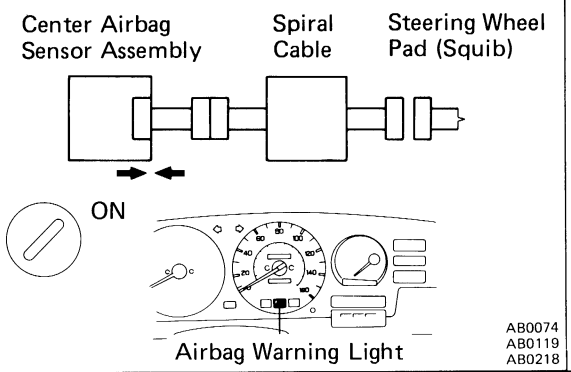

P (1) Disconnect negative (–) terminal cable from battery.
(2) Connect center airbag sensor assembly connector.
(3) Connect negative (–) terminal cable to battery.
(4) Turn ignition switch ACC or ON.

C Check operation of airbag warning light.

YES

NO **Check terminal LA of center airbag sensor assembly and electrical connection check mechanism. If normal, replace center airbag sensor assembly.**

From the results of the above inspection, the malfunctioning part can now be considered normal. To make sure of this, use the simulation method to check.

6 Is new ECU-B fuse burnt out again ?

YES

NO **Using simulation method, reproduce malfunction symptoms (See page AB-32).**

Check harness between ECU-B fuse and airbag warning light, and ECU-B fuse and center airbag sensor assembly.

HINT: If diagnostic code 22 is output, perform the following troubleshooting:

1 **Is diagnostic code 22 output again.**

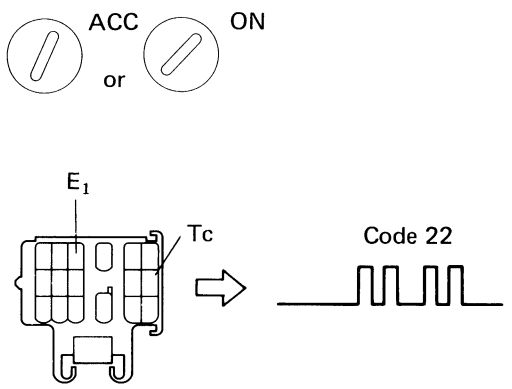

P Clear malfunction code 41 stored in memory (See page AB-31).

C (1) Turn ignition switch LOCK, and wait at least 2 seconds.
(2) Turn ignition switch ACC or ON, and wait at least 20 seconds.
(3) Using SST, connect terminals Tc and E_1 of check connector.
SST 09843-18020
(4) Check diagnostic code.

YES

NO **Using simulation method, reproduce malfunction symptoms (See page AB-32).**

Replace center airbag sensor assembly.

Diag. Code	31	Center Airbag Sensor Assembly Malfunction

CIRCUIT DESCRIPTION

The center airbag sensor assembly consists of a center airbag sensor, safing sensors, ignition control and drive circuit, diagnosis circuit, etc.
It receives signals from the airbag sensors, judges whether or not the airbag must be activated, and diagnoses system malfunction.
Diagnostic code 31 is recorded when occurrence of a malfunction in the center airbag sensor assembly is detected.

Code No.	Diagnosis
31	· Center airbag sensor assembly malfunction.

DIAGNOSTIC CHART

HINT: When a malfunction code other than code 31 is displayed at the same time, first repair the malfunction indicated by the malfunction code other than code 31.

1 Is diagnostic code 31 output again?

- NO → Using simulation method, reproduce malfunction symptoms (See page AB-32).
- YES ↓ Replace center airbag sensor assembly.

INSPECTION PROCEDURES

HINT: When a malfunction code other than code 31 is displayed at the same time, first repair the malfunction indicated by the malfunction code other than code 31.

P Preparation C Check

1 Is diagnostic code 31 output again ?

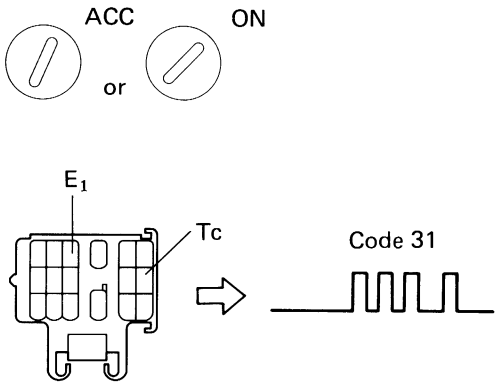

AB0118 AB0119
SH-18-1 FI1394

P Clear malfunction code 41 stored in memory (See page AB-31).

C
(1) Turn ignition switch LOCK, and wait at least 20 seconds.
(2) Turn ignition switch ACC or ON, and wait at least 20 seconds.
(3) Repeat operation in step (1) and (2) at least 5 times.
(4) Using SST, connect terminals Tc and E_1 of check connector.
SST 09843-18020
(5) Check diagnostic code.

YES

NO **Using simulation method, reproduce malfunction symptoms (See page AB-32).**

Replace center airbag sensor assembly.

Diag. Code	41	Malfunction Stored in Memory

CIRCUIT DESCRIPTION

If a malfunction occurs in the airbag system, malfunction codes 11 to 31 may be output, and when the battery is disconnected after the malfunction is repaired, malfunction codes 11 to 31 will be cleared, but code 41 will be output instead.
So long as the cancellation operation for a malfunction stored in memory (See page AB-31) is not performed, code 41 is stored in the center airbag sensor assembly and the airbag warning light remains lit up.

Code No.	Diagnosis
41	· Malfunction recorded in memory. · Center airbag sensor assembly malfunction.

DIAGNOSTIC CHART

1 Check operation of airbag warning light.
- OK → System is normal.
- NG ↓

2 Is diagnostic code 41 output again?
- YES → Check harness between ECU-B fuse and center airbag sensor assembly. If normal, replace center airbag sensor assembly.
- NO ↓ Perform troubleshooting according to malfunction code output.

WIRING DIAGRAM

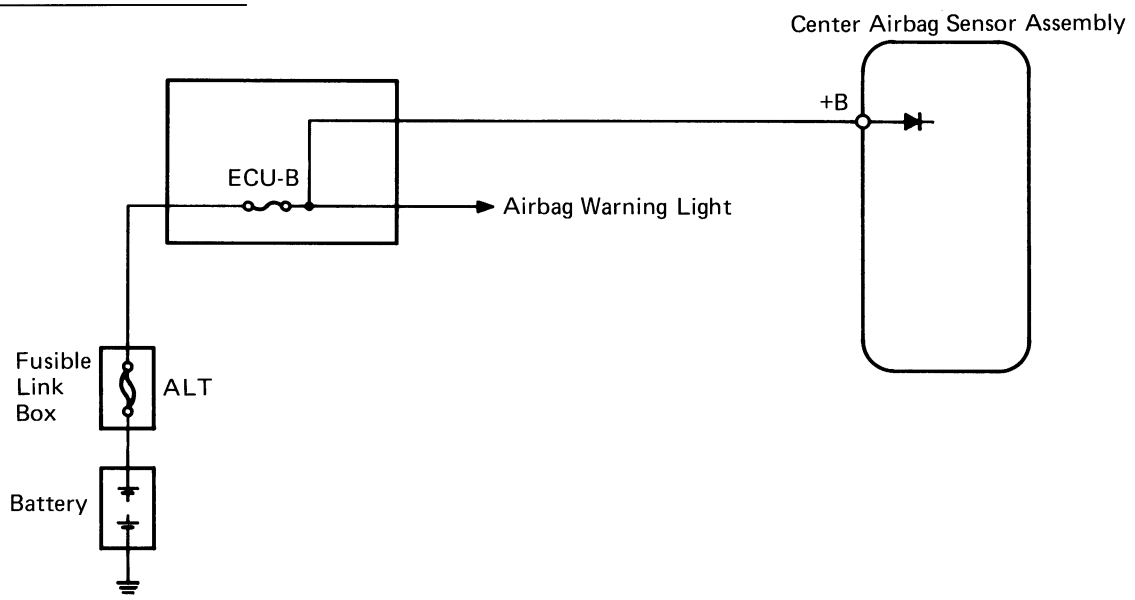

AB0194

INSPECTION PROCEDURES

P Preparation C Check

1 Check operation of airbag warning light.

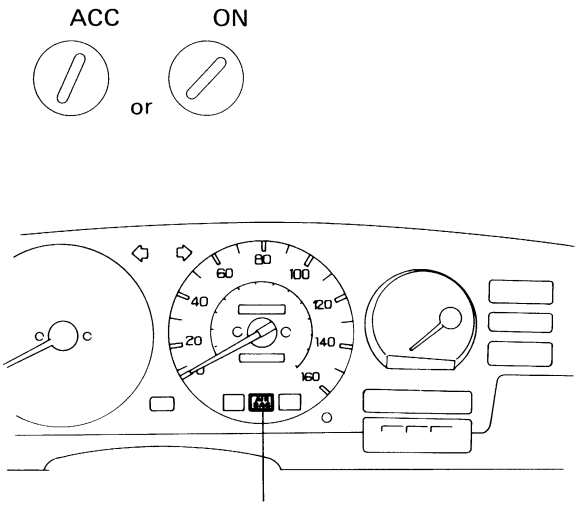

P Clear malfunction code 41 stored in memory (See page AB-31).

C (1) Turn ignition switch LOCK, and wait at least 2 seconds.
(2) Turn ignition switch ACC or ON, and wait at least 20 seconds.
(3) Check operation of airbag warning light.

OK **Airbag warning light turns off.**

NG

OK **System is normal.**

2 Is diagnostic code 41 output again ?

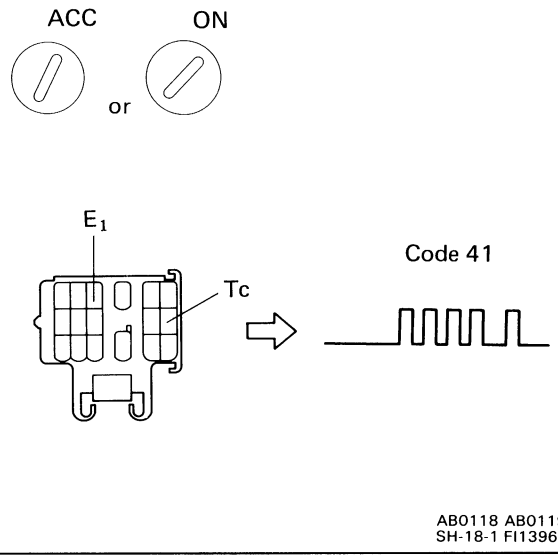

C (1) Turn ignition switch ACC or ON, and wait at least 20 seconds.
(2) Using SST, connect terminals Tc and E_1 of check connector.
SST 09843-18020
(3) Check diagnostic code.

NO

YES **Check harness between ECU-B fuse and center airbag sensor assembly. If normal, replace center airbag sensor assembly.**

Perform troubleshooting according to malfunction code output.

Airbag Warning Light System (Always Lit Up)

CIRCUIT DESCRIPTION

The airbag warning light is located on the combination meter.
When the airbag system is normal, the airbag warning light lights up for approx. 6 seconds after the ignition switch is turned from LOCK position to ACC or ON position, and then turns off automatically.
If there is a malfunction in the airbag system, the airbag warning light lights up to inform the driver of the abnormality.
When terminals Tc and E_1 of the check connector are connected, the diagnostic code is displayed by the blinking of the airbag warning light.

DIAGNOSTIC CHART

1 Does airbag warning light turn off?

- NO → Check airbag warning light circuit or terminal AB circuit of check connector.
- YES → Replace center airbag sensor assembly.

WIRING DIAGRAM

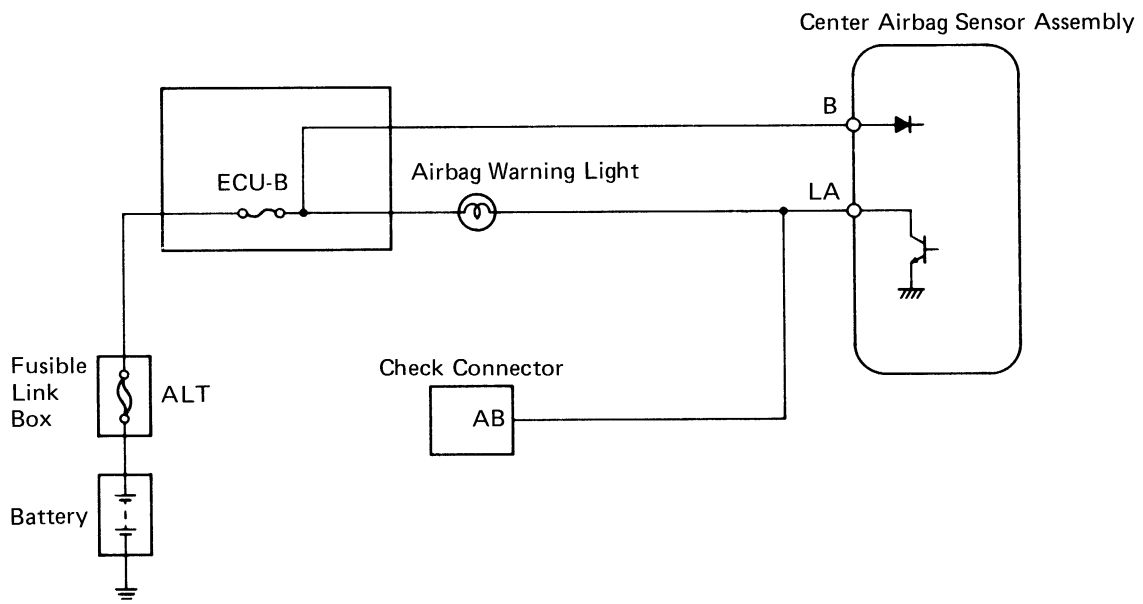

AB0240

INSPECTION PROCEDURES

P Preparation C Check

1 Does airbag warning light turn off ?

LOCK

Center Airbag Sensor Assembly

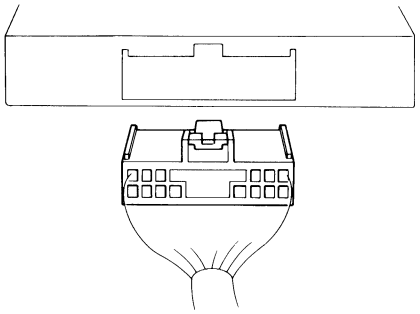

AB0117
AB0041

P
(1) Turn ignition switch LOCK.
(2) Disconnect negative (–) terminal cable from battery.
(3) Disconnect center airbag sensor assembly connector.
(4) Connect negative (–) terminal cable to battery.

C Check operation of airbag warning light.

YES

Replace center airbag sensor assembly.

NO

Check airbag warning light circuit or terminal AB circuit of check connector.

Tc Terminal Circuit

CIRCUIT DESCRIPTION

By connecting terminals Tc and E_1 of the check connector, the center airbag sensor assembly is set in the diagnostic code output mode. The diagnostic codes are displayed by the blinking of the airbag warning light.

DIAGNOSTIC CHART

Troubleshooting for this system is different depending on whether the diagnostic code is not displayed or is continuously displayed. Confirm the problem symptoms first before selecting the appropriate troubleshooting procedure.

HINT: If the diagnostic code is not displayed, perform the following troubleshooting:

1 Check voltage between terminals Tc and E_1 of check connector.
- OK → Go to step **3**.
- NG ↓

2 Check voltage between terminal Tc of check connector and body ground.
- OK → Check harness between terminal E_1 of check connector and body ground.
- NG ↓

3 Check center airbag sensor assembly.
- OK → Check harness between center airbag sensor assembly and check connector.
- NG ↓

Replace center airbag sensor assembly.

HINT: If the diagnostic code is continuously displayed, perform the following troubleshooting:

1 Check resistance between terminal Tc of center airbag sensor assembly and body ground.
- OK → Replace center airbag sensor assembly.
- NG ↓

Repair or replace harness or connector.

DIAGNOSTIC CHART

WIRING DIAGRAM

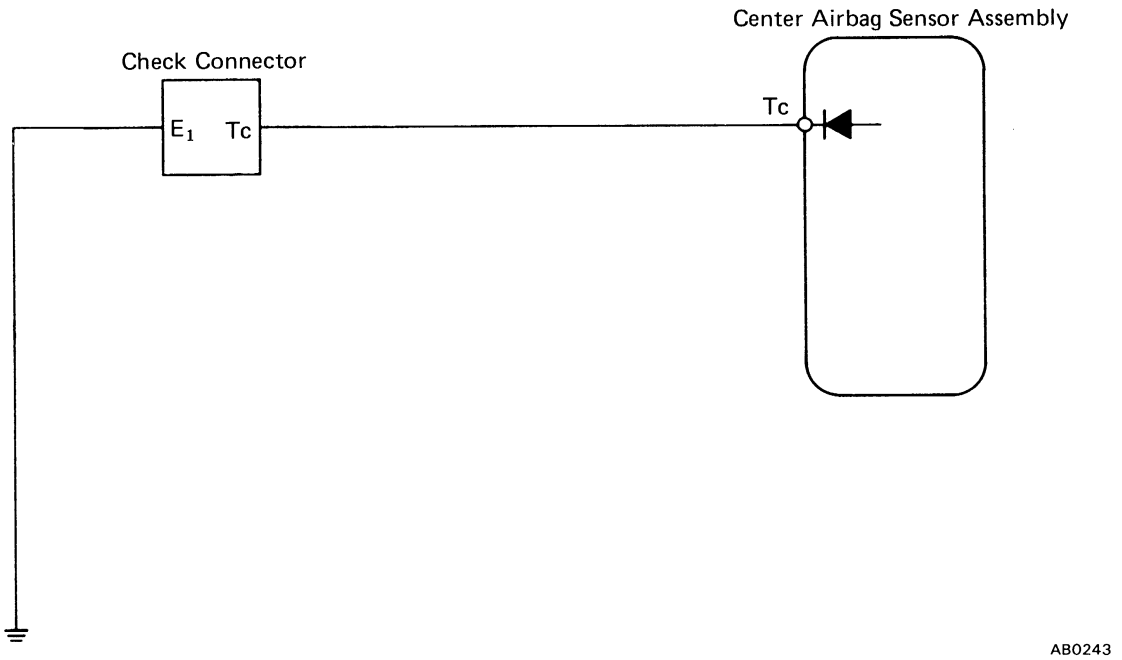

INSPECTION PROCEDURES

P Preparation C Check

HINT: If the diagnostic code is not displayed, perform the following troubleshooting:

1 Check voltage between terminals Tc and E1 of check connector.

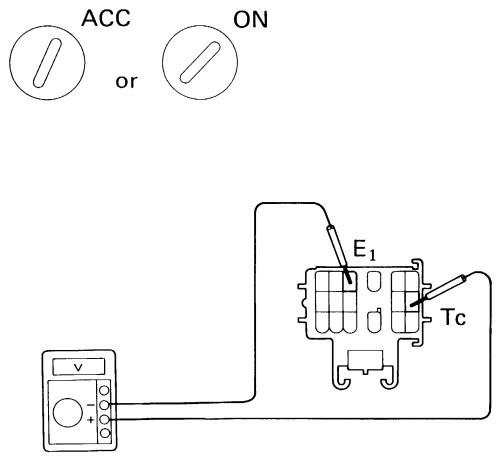

P Turn ignition switch ACC or ON.

C Measure voltage between terminals Tc and E_1 of check connector.

OK **Voltage: Battery voltage**

NG

OK Go to step 3.

2 Check voltage between terminal Tc of check connector and body ground.

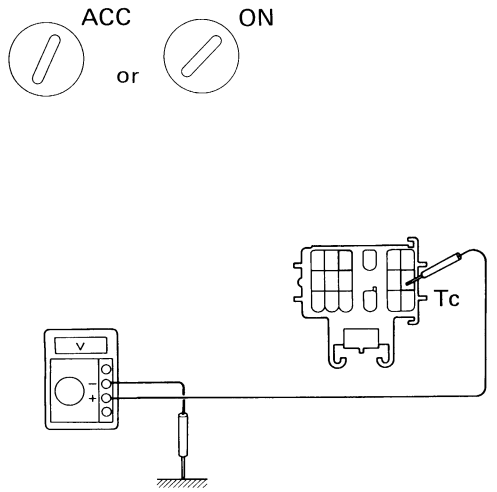

C Measure voltage between terminal Tc of check connector and body ground.

OK **Voltage: Battery voltage**

NG

OK Check harness between terminal E_1 of check connector and body ground.

3 Check center airbag sensor assembly.

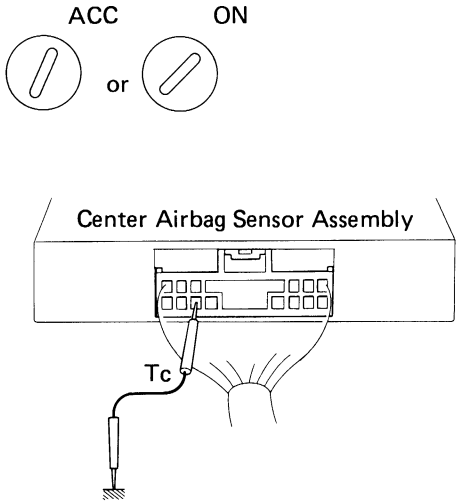

AB0118 AB0119 AB0186

P Using a service wire, connect terminal Tc of center airbag sensor assembly connector to body ground.

C Check operation of airbag warning light.

OK **Airbag warning light comes on.**

OK **Check harness between center airbag sensor assembly and check connector.**

NG

Replace center airbag sensor assembly.

HINT: If the diagnostic code is continuously displayed, perform the following troubleshooting.

1 Check resistance between terminal Tc of center airbag sensor assembly and body ground.

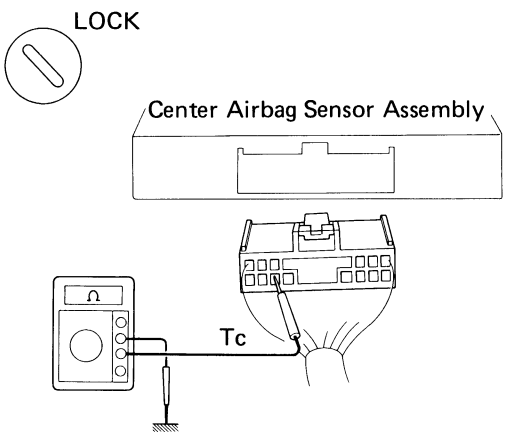

AB0117
AB0187

P (1) Turn ignition switch LOCK.
(2) Disconnect center airbag sensor assembly connector.

C Check resistance between terminal Tc of center airbag sensor assembly and body ground.

OK **Resistance:** ∞ Ω

OK Replace center airbag sensor assembly.

NG

Repair or replace harness or connector.

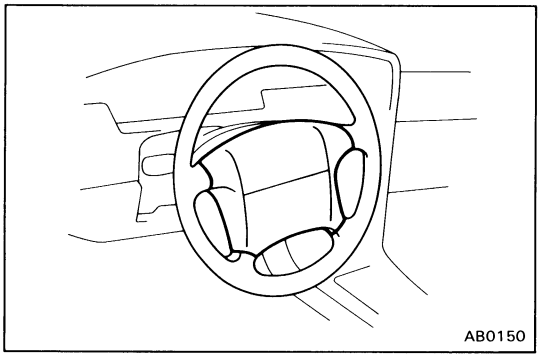

DISPOSAL OF STEERING WHEEL PAD (WITH AIRBAG)

When scrapping vehicles equipped with an airbag system or disposing of a steering wheel pad (with airbag), always first deploy the airbag in accordance with the procedure described below.

If any abnormality occurs with the airbag deployment, contact the SERVICE DEPT. of TOYOTA MOTOR SALES, U.S.A., INC..

Never dispose of a steering wheel pad which has an undeployed airbag.

When disposing of a steering wheel pad with an airbag deployed in a collision, follow the same procedure given under "AIRBAG DEPLOYMENT PROCEDURE (WHEN SCRAPPING THE VEHICLE), part 5, DISPOSAL OF STEERING WHEEL PAD (WITH AIRBAG)" (See page AB-84).

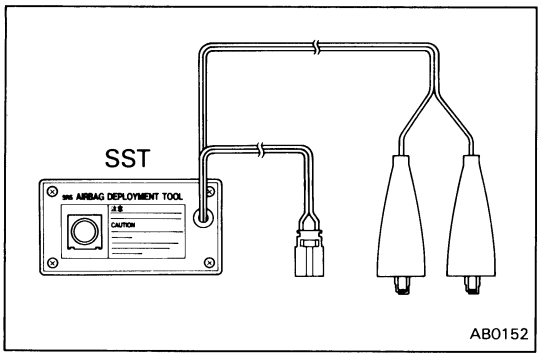

PRECAUTIONS FOR AIRBAG DEPLOYMENT

1. **The airbag produces a sizeable exploding sound when it deploys, so perform the operation out-of-doors and where it will not create a nuisance to nearby residents.**
2. **When deploying the airbag, always use the specified SST; SRS AIRBAG DEPLOYMENT TOOL (SST 09082-00700). Perform the operation in a place away from electrical noise.**
3. **When deploying an airbag, perform the operation from at least 10 m (33 ft) away from the steering wheel pad.**
4. **A steering wheel pad (with airbag) deployed is very hot, so leave it alone for at least 30 minutes after deployment.**
5. **Use gloves and safety glasses when handling a steering wheel pad with deployed airbag.**
6. **Always wash your hands with water after completing the operation.**
7. **Do not apply water, etc. to a steering wheel pad with deployed airbag.**

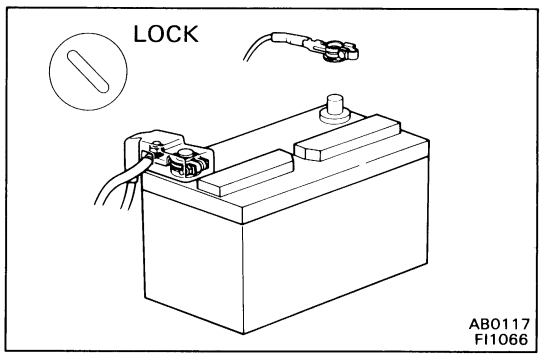

AIRBAG DEPLOYMENT PROCEDURE (WHEN SCRAPPING VEHICLE)

HINT: Have a battery ready as the power source to deploy the airbag.

1. **DISCONNECT NEGATIVE (–) TERMINAL CABLE FROM BATTERY**

   CAUTION: Work must be started after approx. 20 seconds or longer from the time the ignition switch is turned to the LOCK position and the negative (–) terminal cable is disconnected from the battery (See page AB-2).

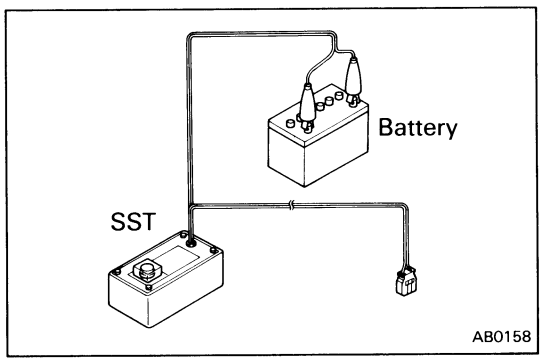

2. CONFIRM FUNCTIONING OF SST (See page AB-88)

SST 09082-00700

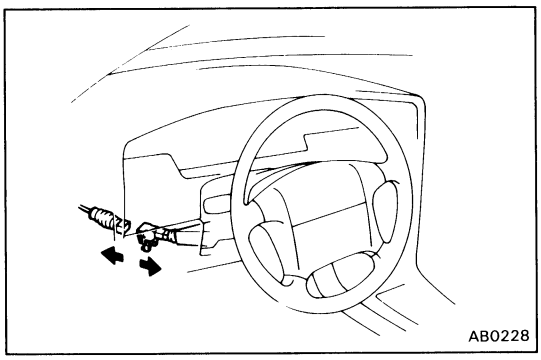

3. INSTALL SST

CAUTION: Check that there is no looseness in the steering wheel and steering wheel pad.

(a) Remove the No. 1 under cover.

(b) Disconnect the airbag connector of the spiral cable.

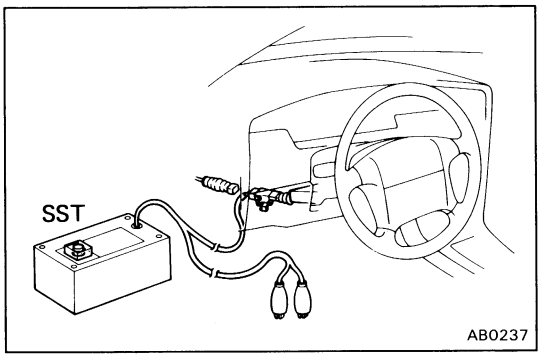

(c) Connect the SST connector to the airbag connector of the spiral cable.

SST 09082-00700

(d) Move the SST to at least 10 m (33 ft) from the front of the vehicle.

(e) Close all the doors and windows of the vehicle.

NOTICE: Take care not to damage the SST wire harness.

(f) Connect the SST red clip to the battery positive (+) terminal and the black clip to the battery negative (–) terminal.

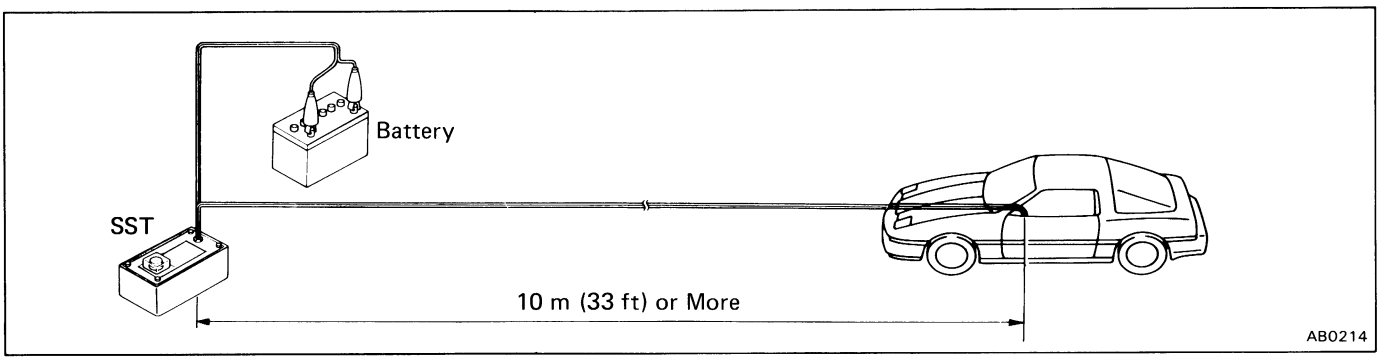

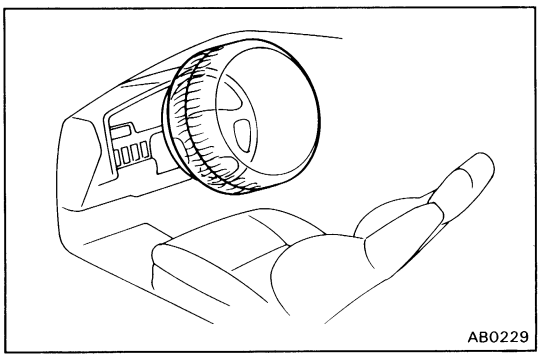

4. DEPLOY AIRBAG

(a) Confirm that no-one is inside the vehicle or within 10 m (33 ft) of the vehicle.

(b) Press the SST activation switch and deploy the airbag.

HINT: The airbag deploys simultaneously as the LED of the SST activation switch lights up.

5. **DISPOSAL OF STEERING WHEEL PAD (WITH AIRBAG)**

CAUTION:

- **A steering wheel pad (with airbag) deployed is very hot, so leave it alone for at least 30 minutes after deployment.**
- **Use gloves and safety glasses when handling a steering wheel pad with deployed airbag.**
- **Do not apply water, etc. to a steering wheel pad with deployed airbag.**
- **Always wash your hands with water after completing the operation.**

(a) When scrapping a steering wheel pad with deployed airbag, scrap the vehicle with the steering wheel pad still installed.

(b) When moving a vehicle for scrapping which has a steering wheel pad with deployed airbag, use gloves and safety glasses.

AIRBAG DEPLOYMENT PROCEDURE (PROCEDURE FOR DISPOSAL OF STEERING WHEEL PAD ONLY)

When disposing of the steering wheel pad (with airbag) only, never use the customer's vehicle to deploy the airbag.

Remove the steering wheel pad from the vehicle and be sure to follow the procedure given below when deploying the airbag.

HINT: Have a battery ready as the power source to deploy the airbag.

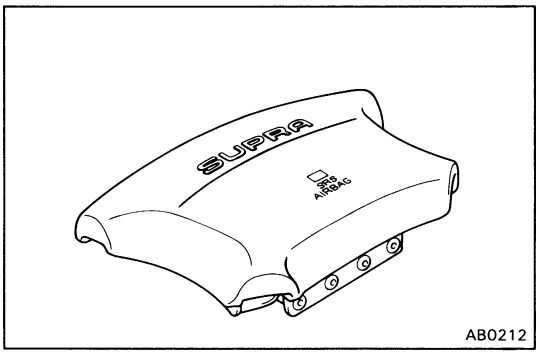

1. **REMOVE STEERING WHEEL PAD (SEE PAGE AB-15)**

CAUTION:

- **When removing the steering wheel pad (with airbag), work must be started after approx. 20 seconds or longer from the time the ignition switch is turned to the LOCK position and the negative (–) terminal cable is disconnected from the battery.**
- **When storing the steering wheel pad, keep the upper surface of the pad facing upward.**

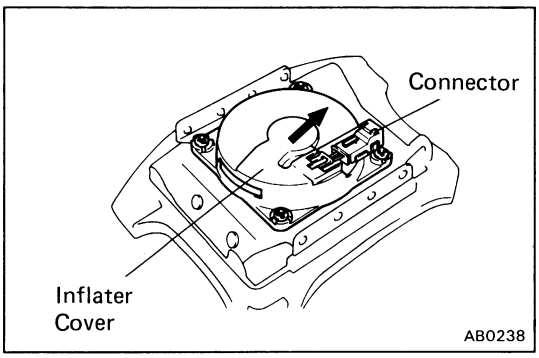

2. **REMOVE STEERING WHEEL PAD CONNECTOR**

Remove the connector on the steering wheel pad rear surface from the inflater cover.

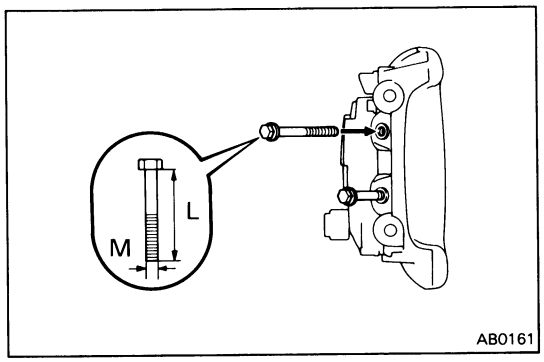

3. FIX STEERING WHEEL PAD TO DISC WHEEL WITH TIRE

(a) Install bolts with washers in the four bolt holes in the steering wheel pad.

Bolt: L 35.0 mm (1.378 in.)
M 6.0 mm
Pitch 1.0 mm

NOTICE: Tighten the bolts by hand until the bolts become difficult to turn.
Do not tighten the bolts too much.

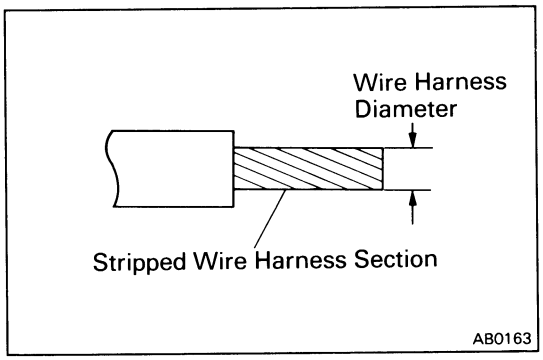

(b) Using a service-purpose wire harness for vehicle, tie down the steering wheel pad to the disc wheel.

Wire harness: Stripped wire harness section 1.25 mm^2 or more (0.002 $in.^2$ or more)

HINT: To calculate the square of the stripped wire harness section —

$$\text{Square} = \frac{3.14 \times (\text{Diameter})^2}{4}$$

CAUTION: If a wire harness which is too thin or some other thing is used to tie down the steering wheel pad, it may be snapped by the shock when the airbag is deployed, this is highly dangerous. Always use a wire harness for vehicle use which is at least 1.25 mm^2 (0.002 $in.^2$).

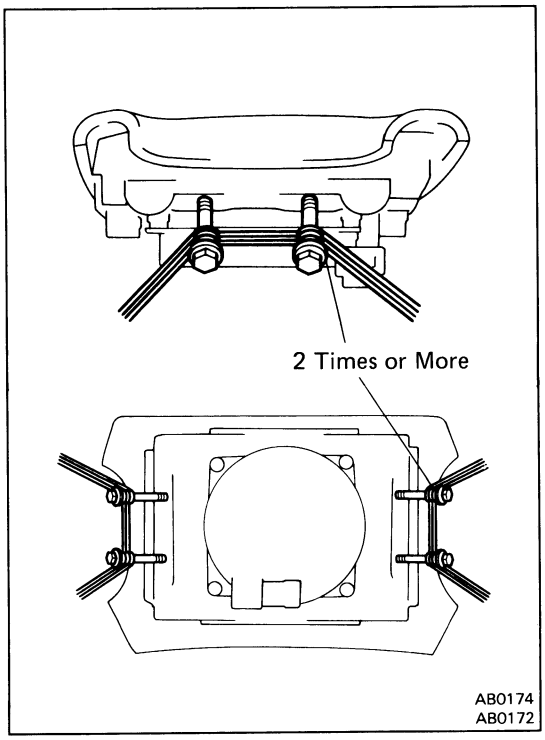

(1) Using 3 wire harnesses, wrap the wire harnesses at least 2 times each around the bolts installed on the left and right sides of the steering wheel pad.

CAUTION: Tightly wind the wire harness around the bolts so that there is no slack.
If there is slackness in the wire harness, the steering wheel pad may come loose due to the shock when the airbag is deployed, this is highly dangerous.

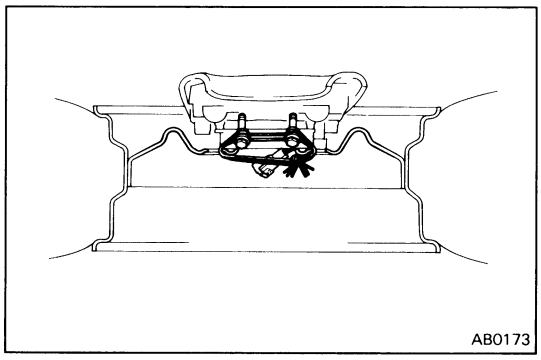

(2) Face the upper surface of the steering wheel pad upward. Separately tie the left and right sides of the steering wheel pad to the disc wheel through the hub nut holes.
Position the steering wheel pad connector so that it hangs downward through a hub hole in the disc wheel.

CAUTION:

- **Always tie down the steering wheel pad with the pad side facing upward. It is very dangerous if the steering wheel pad is tied down with the metal surface facing upward, as the wire harness will be cut by the shock of the airbag deploying and the steering wheel pad will be thrown into the air.**
- **Make sure that the wire harness is tight. It is very dangerous if looseness in the wire harness results in the steering wheel pad coming free through the shock of the airbag deploying.**

NOTICE: The disc wheel will be marked by airbag deployment, so use a redundant disc wheel.

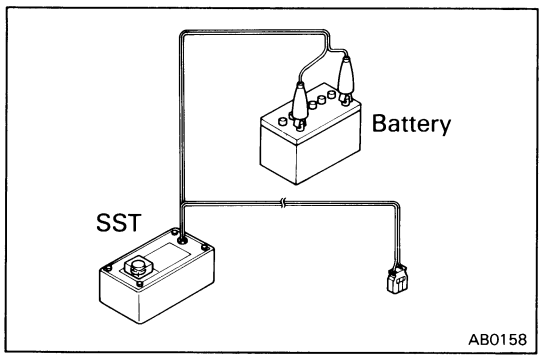

4. CONFIRM FUNCTIONING OF SST (SEE PAGE AB-88)

SST 09082-00700

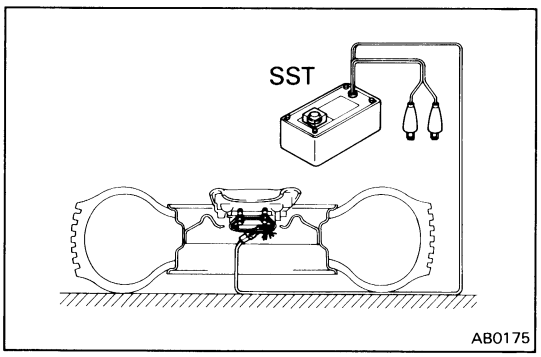

5. INSTALL SST

CAUTION: Place the disc wheel on level ground.

(a) Connect the SST connector to the steering wheel pad connector.

SST 09082-00700

(b) Move the SST to at least 10 m (33 ft) away from the steering wheel pad tied down on the disc wheel.

(c) Connect the SST red clip to the battery positive (+) terminal and the black clip to the battery negative (–) terminal.

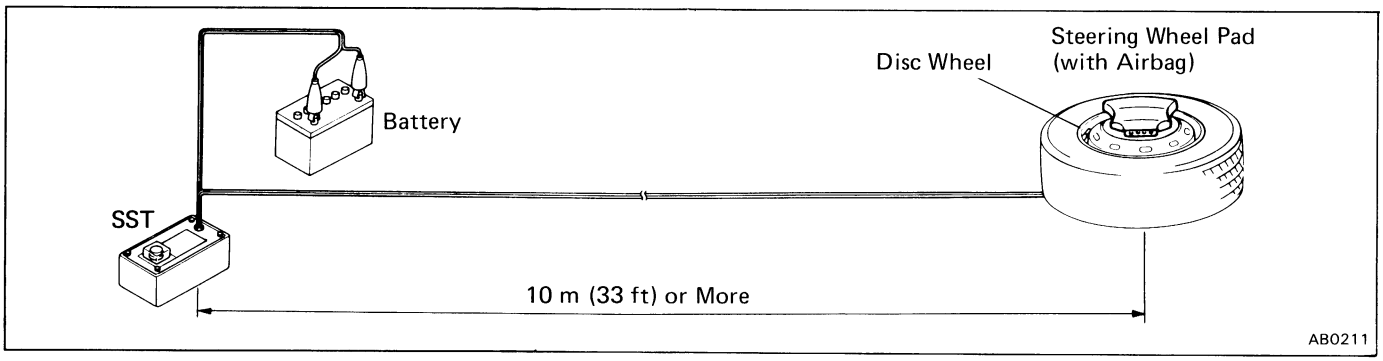

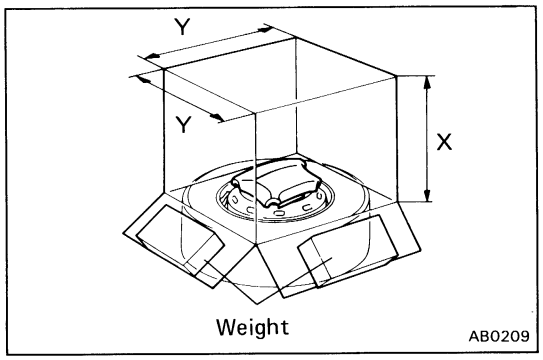

6. COVER STEERING WHEEL PAD WITH CARDBOARD BOX OR TIRES

(Covering Method Using Cardboard Box)

Cover the steering wheel pad with the cardboard box and weigh the cardboard box down in four places with a at least 20 kg (44 lb, 196 N).

Size of cardboard box: Must exceed the following dimensions—

x = 460 mm (18.11 in.)
When dimension "y" of the cardboard box exceeds the diameter of the disc wheel with tire the steering wheel pad is tied to—
x = 460 mm (18.11 in.) + width of tire

y = 650 mm (25.59 in.)

NOTICE: If a cardboard box smaller than the size specified is used, the cardboard box will be broken by the shock of the airbag deployment.

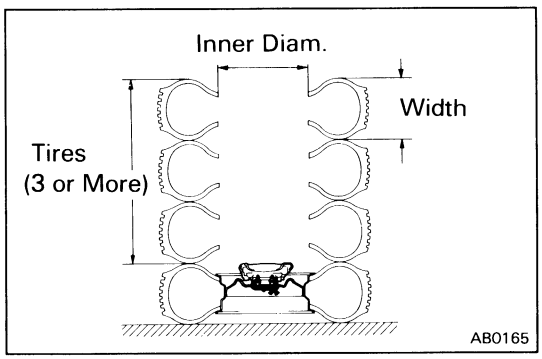

(Covering Method Using Tires)

Place at least three tires without disc wheel on top of the disc wheel with tire to which the steering wheel pad is tied.

Tire size: Must exceed the following dimensions —
Width 185 mm (7.28 in.)
Inner diam. 360 mm (14.17 in.)

CAUTION: Do not use tires with disc wheels.

NOTICE: The tires may be marked by the airbag deployment, so use redundent tires.

7. AIRBAG DEPLOYMENT

(a) Confirm that no-one is within 10 m (33 ft) of the disc wheel the steering wheel pad is tied to.

(b) Press the SST activation switch and deploy the airbag.

HINT: The airbag deploys simultaneously as the LED of the SST activation switch lights up.

8. DISPOSAL OF STEERING WHEEL PAD (WITH AIRBAG)

CAUTION:

- **A steering wheel pad with airbag deployed is very hot, so leave it alone for at least 30 minutes after deployment.**
- **Use gloves and safety glasses when handling a steering wheel pad with deployed airbag.**
- **Do not apply water, etc. to a steering wheel pad with deployed airbag.**
- **Always wash your hands with water after completing the operation.**

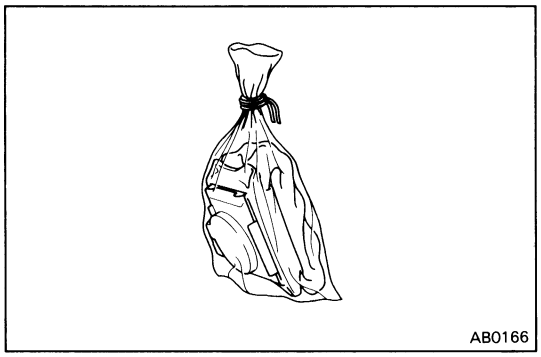

(a) Remove the steering wheel pad from the disc wheel.

(b) Place the steering wheel pad in a vinyl bag, tie the end tightly and dispose of it the same way as other general parts.

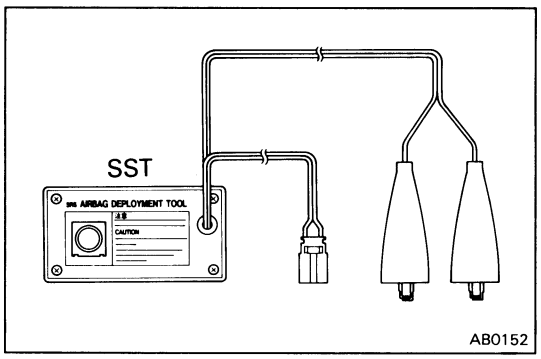

CONFIRM FUNCTIONING OF SST

When deploying the airbag, always use the specified SST: SRS AIRBAG DEPLOYMENT TOOL.

SST 09082-00700

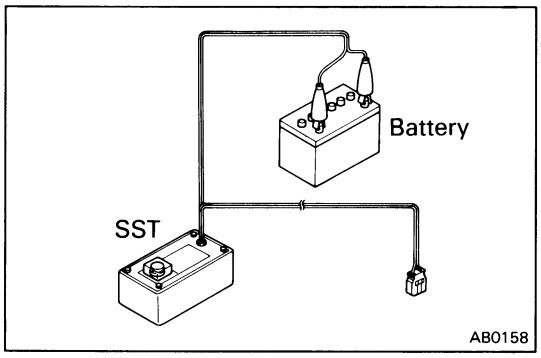

1. CONNECT SST TO BATTERY

Connect the red clip of the SST to the battery positive (+) terminal and the black clip to the battery negative (–) terminal.

HINT: Do not connect the yellow connector which connects with the airbag system.

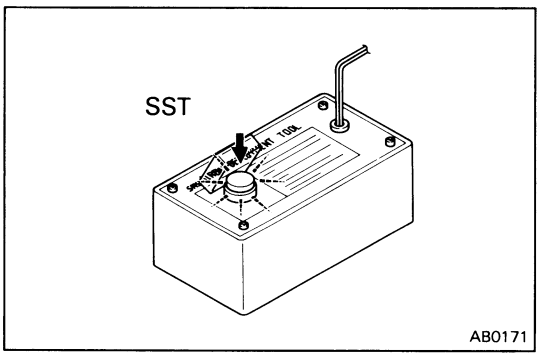

2. CONFIRM FUNCTIONING OF SST

Press the SST activation switch, and confirm the LED of the SST activation switch lights up.

CAUTION: If the LED lights up when the activation switch is not being pressed, SST malfunction is probable, so definitely do not use the SST.

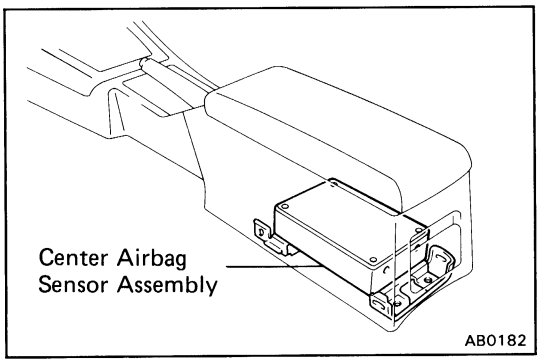

DISPOSAL OF CENTER AIRBAG SENSOR ASSEMBLY

The center airbag sensor assembly contains mercury. After performing replacement, do not destroy the old part. When scrapping the vehicle or replacing the center airbag sensor assembly itself, remove the center airbag sensor assembly and dispose of it as toxic waste.

BODY ELECTRICAL SYSTEM

	Page
GENERAL INFORMATION	BE-2
PRECAUTIONS	BE-8
LOCATION OF SWITCHES AND RELAYS	BE-9
IGNITION SWITCH	BE-15
LIGHTING SYSTEM	BE-16
HEADLIGHT CLEANER (CANADA Only)	BE-29
WIPERS AND WASHERS	BE-31
COMBINATION METER	BE-36
REAR WINDOW DEFOGGER	BE-47
POWER WINDOW	BE-49
DOOR LOCK CONTROL SYSTEM	BE-51
REMOTE CONTROL MIRROR	BE-53
MIRROR HEATER	BE-54
POWER SEAT	BE-55
CRUISE CONTROL SYSTEM	BE-58
THEFT DETERRENT SYSTEM (U.S.A. Only)	BE-85
AUDIO SYSTEM	BE-101
CLOCK	BE-115

GENERAL INFORMATION

Wiring Color Code

Wire colors are indicated by an alphabetical code.

B	=Black	L	=Blue	R	=Red
BR	=Brown	LG	=Light Green	V	=Violet
G	=Green	O	=Orange	W	=White
GR	=Gray	P	=Pink	Y	=Yellow

The first letter indicates the basic wire color and the second letter indicates the color of the stripe.

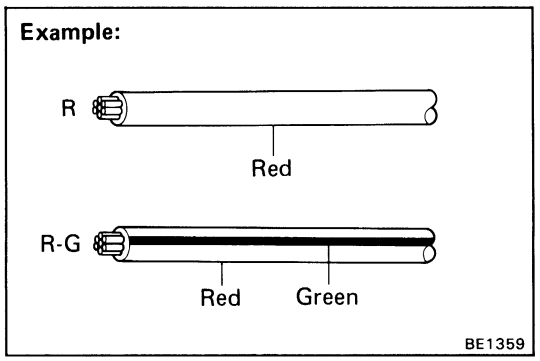

Connector

1. PIN NUMBER OF FEMALE CONNECTOR

Numbered in order from upper left to lower right.

2. PIN NUMBER OF MALE CONNECTOR

Numbered in order from upper right to lower left.

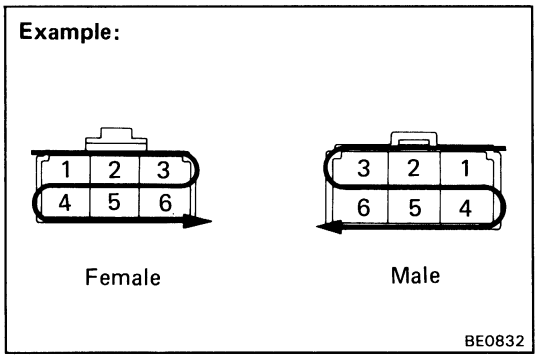

HINT: When connectors with different numbers of terminals are used with the same parts, the pin number and the number of terminals are specified.

e.g. 1/20 = No.1 pin/20 terminals connector
14/14 = No.14 pin/14 terminals connector

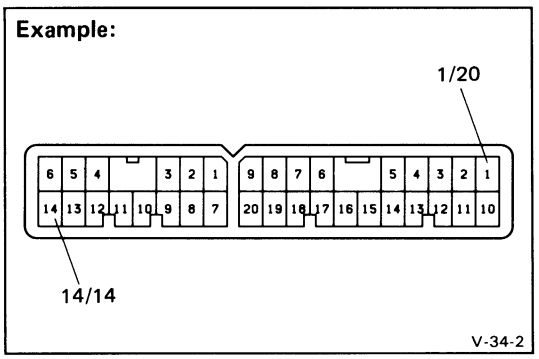

3. DISTINCTION OF MALE AND FEMALE CONNECTORS

Male and female connectors are distinguished by shape of their internal pins.

(a) All connectors are shown from the open end, and the lock is on top.

(b) To pull apart the connectors, pull on the connector itself, not the wires.

HINT: Check to see what kind of connector you are disconnecting before pulling apart.

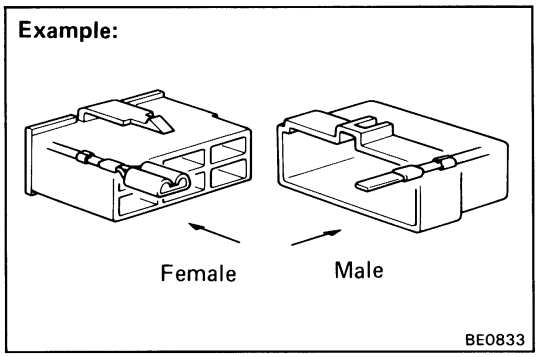

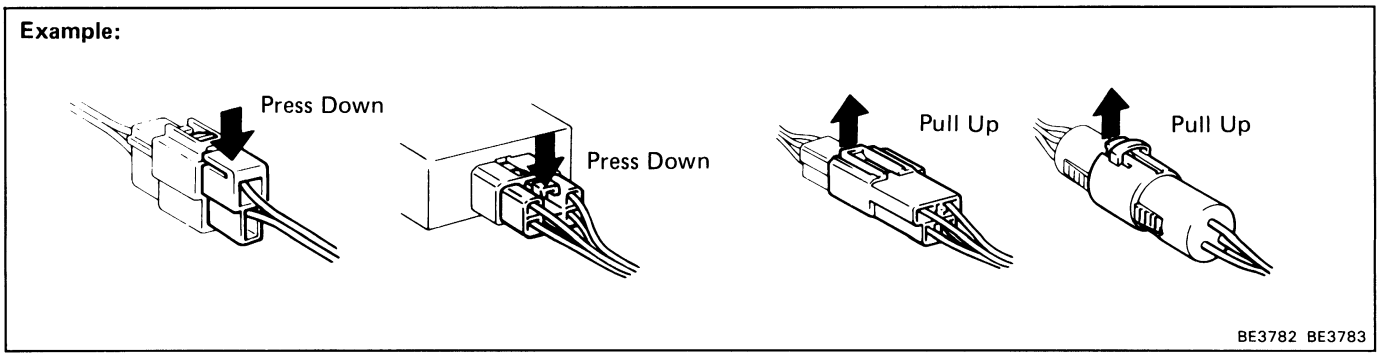

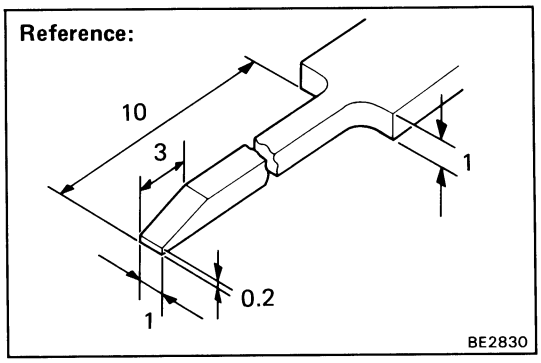

How to Replace Terminal

(with Terminal Retainer Type)

HINT: To remove the terminal for this type of connector, please construct and use the special tool or like object shown on the left.

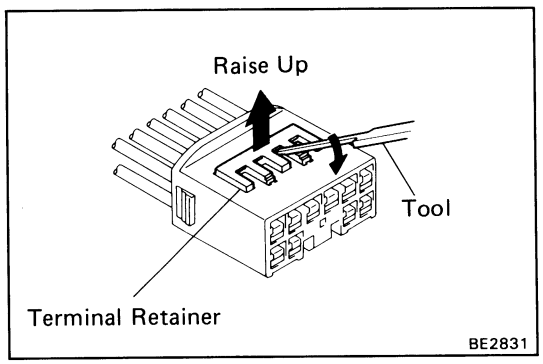

1. DISCONNECT CONNECTOR

Disconnect the connector according to the instructions on BE-2.

2. DISCONNECT TERMINAL FROM CONNECTOR

(a) Using the special tool, raise the retainer up to the termporary lock position.

HINT: The needle insertion position varies according to the connector's shape (number of terminals, etc.), so check the position before inserting it.

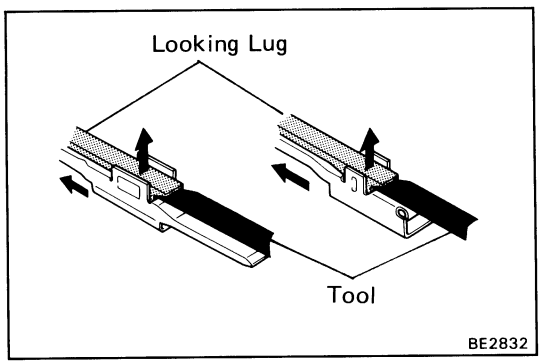

(b) Using the special tool, release the locking lug and pull the terminal out from rear.

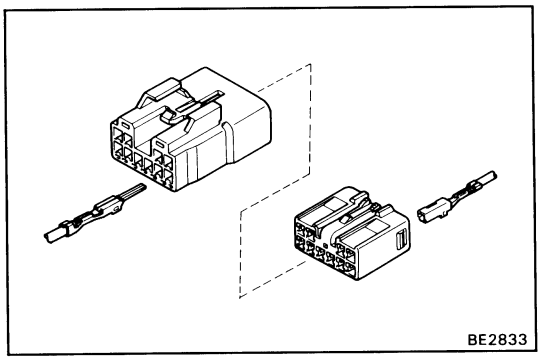

3. INSTALL TERMINAL TO CONNECTOR

(a) Insert the terminal.

HINT:

1. Make sure the terminal is positioned correctly.
2. Insert the terminal until the locking lug locks firmly.
3. Insert the terminal with retainer in the termporary lock position.

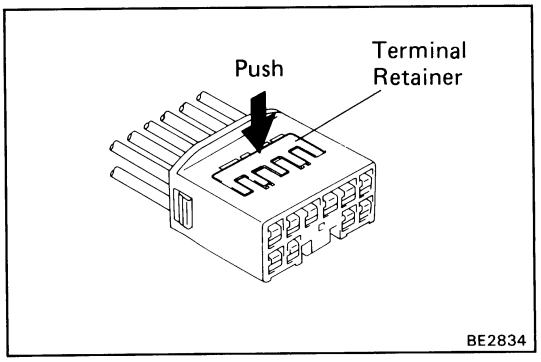

(b) Push the retainer in to the full lock position.

4. CONNECT CONNECTOR

Reset Circuit Breaker

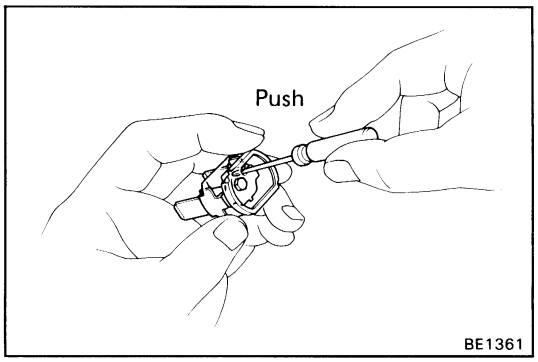

1. REMOVE CIRCUIT BREAKER

(a) Disconnect the negative (−) cable from the battery.

(b) Remove the circuit breaker.

2. RESET CIRCUIT BREAKER

(a) Insert the needle into the reset hole and push it.

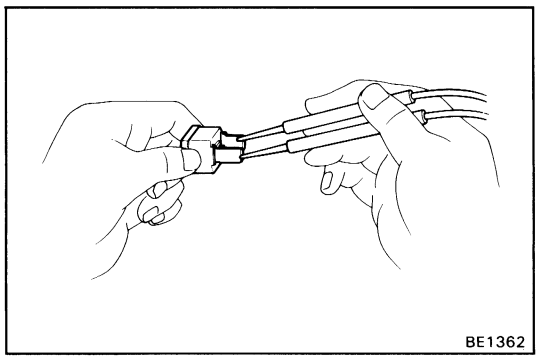

(b) Using an ohmmeter, check that there is continuity between both terminals of the circuit breaker.

If continuity is not as specified, replace the circuit breaker.

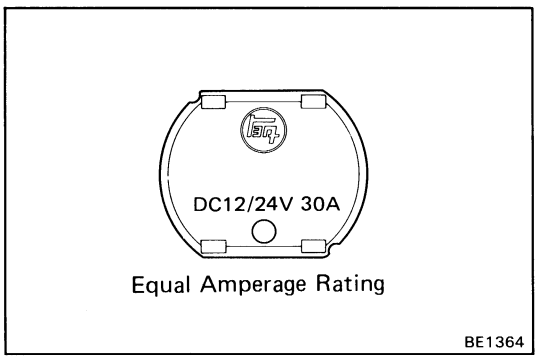

HINT: If replacing the circuit breaker, be sure to replace it with a breaker with an equal amperage rating.

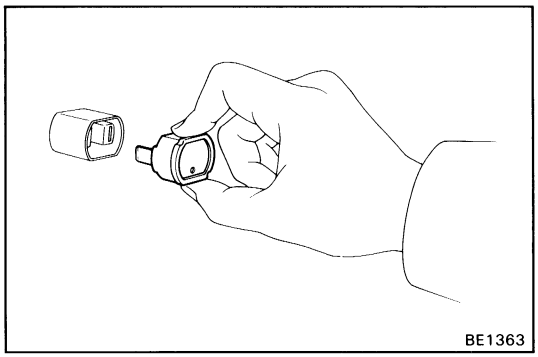

3. INSTALL CIRCUIT BREAKER

(a) Install the circuit breaker.

(b) Connect the negative (−) cable to the battery.

HINT: If a circuit breaker continues to cut out, a short circuit is indicated. Have the system checked by a qualified technician.

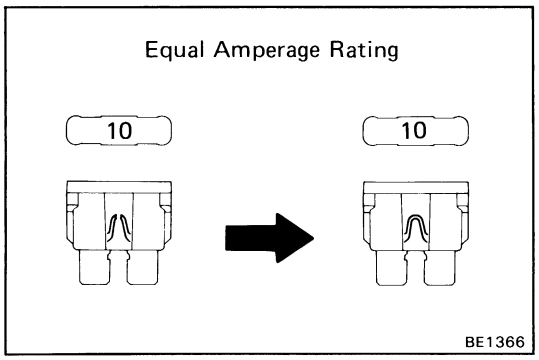

Replacement of Fuse and Fusible Link

HINT: If replacing the fuse or fusible link, be sure to replace it with a fuse or fusible link with an equal amperage rating.

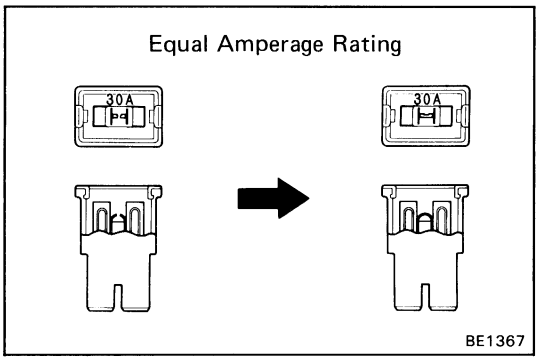

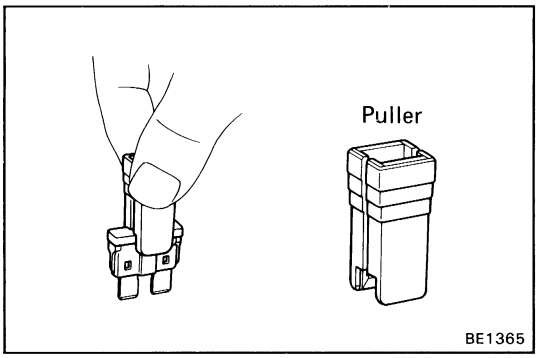

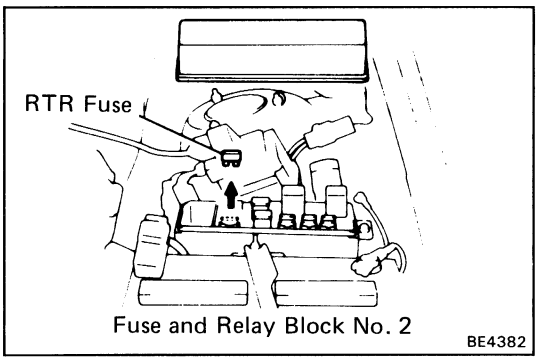

NOTICE:

1. **Turn off all electrical components and the ignition switch before replacing a fuse or fusible link. Do not exceed the fuse or fusible link amperage rating.**
2. **Always use a fuse puller for removing and inserting a fuse. Remove and insert straight in and out without twisting. Twisting could force open the terminals too much, resulting in a bad connection.**

If a fuse or fusible link continues to blow, a short circuit is indicated. The system must be checked by a qualified technician.

HINT: The puller is located at Junction block No.2.

Take Care When Inspecting Headlight Circuit

CAUTION: With the headlight switch OFF, disconnect the "RTR" (30A) fuse before beginning work.

How to Inspect for System Inspection

This inspection procedure is a simple troubleshooting which should be carried out on the vehicle during system operation and was prepared on the assumption of system component troubles (except for the wires and connectors, etc.).

Always inspect the trouble taking the following items into consideration.

- Ground point fault
- Open or short circuit of the wire harness
- Connector or terminal connection fault
- Fuse or fusible link fault

NOTICE:

1. **This is an on-vehicle inspection during system operations. Therefore, inspect the trouble with due regard for security.**
2. **In case of connecting the battery directly, be careful not to short circuit, and select the applicable voltage.**

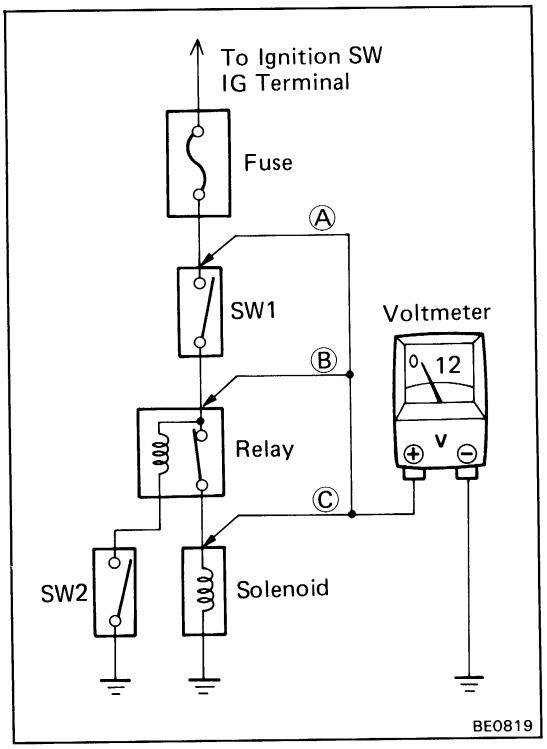

Check for Voltage

(a) Establish conditions in which voltage is present at the check point.

Example:
Ⓐ – Ignition SW on
Ⓑ – Ignition SW and SW 1 on
Ⓒ – Ignition SW, SW 1 and Relay on (SW 2 off)

(b) Using a voltmeter, connect the negative (–) lead to a good ground point or negative (–) battery terminal and the positive (+) lead to the connector or component terminal. This check can be done with a test bulb instead of a voltmeter.

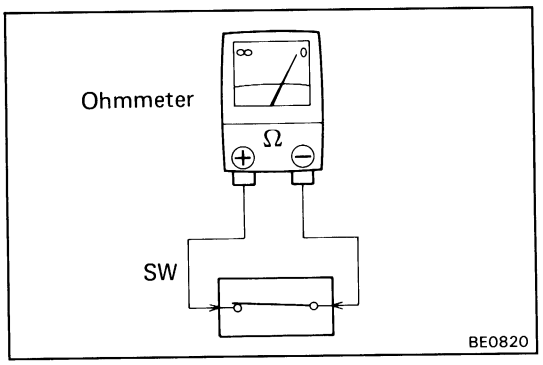

Check for Continuity and Resistance

(a) Disconnect the battery terminal or wire so there is no voltage between the check points.

(b) Contact the two leads of an ohmmeter to each of the check points.

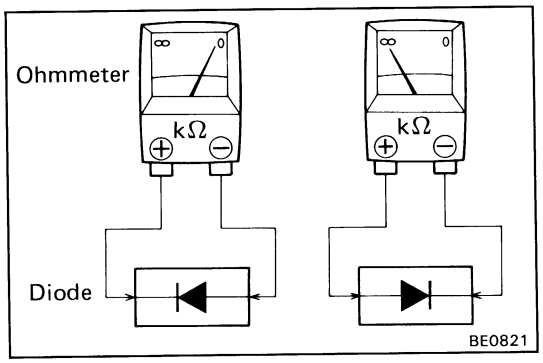

If the circuit has diodes, reverse the two leads and check again.

When contacting the negative (–) lead to the diode positive (+) side and the positive (+) lead to the negative (–) side, there should be continuity. When contacting the two leads in reverse, there should be no continuity.

HINT: Specifications may vary depending on the type of tester, so refer to the tester's instruction manual before performing the inspection.

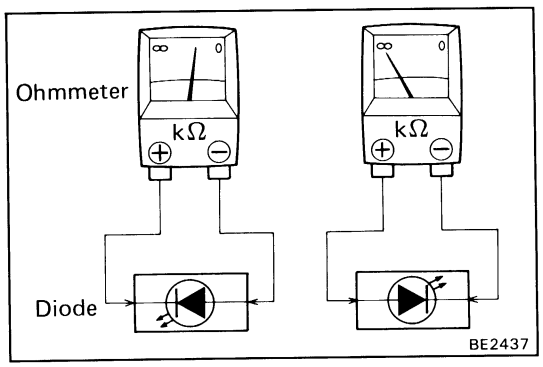

Check LED (Light Emitting Diode) in the same manner as that for diodes.

HINT:
- Use a tester with a power source of 3V or greater to overcome the circuit resistance.
- If a suitable tester is not available, apply battery voltage and check that the LED lights up.

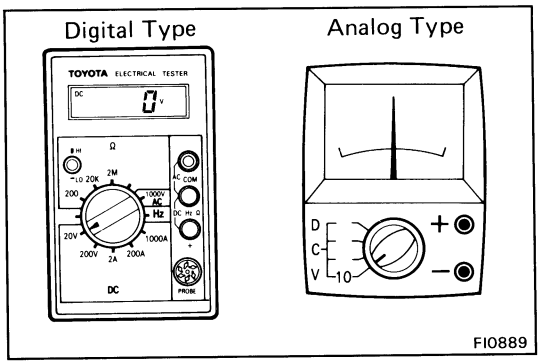

(c) Use a volt/ohmmeter with high impedance (10 k/V minimum) for troubleshooting of the electrical circuit.

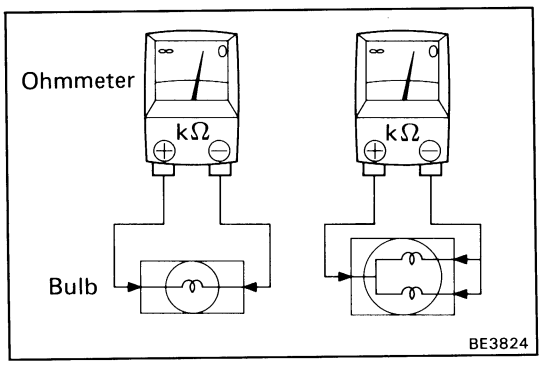

Check the Bulb

(a) Remove the bulb.

(b) There should be continuity between the respective terminals of the bulb together with a certain amount of resistance.

(c) Apply the two leads of the ohmmeter to each of the terminals.

(d) Apply battery voltage and check that the bulb light up.

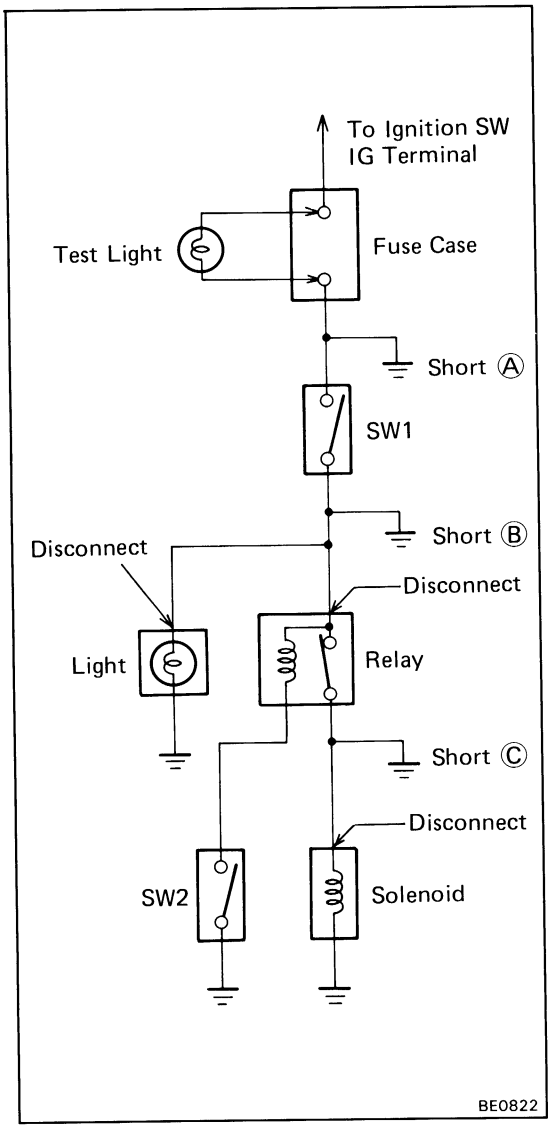

Check for Short Circuit

(a) Remove the blown fuse and eliminate all loads from the fuse.

(b) Connect a test bulb in place of the fuse.

(c) Establish conditions in which the test bulb comes on.

Example:
Ⓐ — Ignition SW on
Ⓑ — Ignition SW and SW 1 on
Ⓒ — Ignition SW, SW 1 and Relay on (Connect the Relay) and SW 2 off (or Disconnect SW 2)

(d) Disconnect and reconnect the connectors while watching the test bulb. The short lies between the connector where the test bulb stays lit and the connector where the bulb goes out.

(e) Find the exact location of the short by lightly shaking the problem wire along the body.

PRECAUTIONS

Take care to observe the following precautions when performing inspections or removal and replacement of body electrical related parts.

1. SRS AIR-BAG SYSTEM

- Work must be started approx. 20 seconds after the ignition is set to the Lock position and negative (—) terminal cable is disconnected from the battery.
- When disconnecting any of the connectors in the SRS AIR-BAG system, be sure to Lock the ignition switch and disconnect the battery negative (—) terminal first. Since the connectors are twin lock type connectors, disconnect the connectors only after releasing the first stage lock.
- When connecting SRS AIR-BAG system connectors, be sure to lock them securely. (If the connectors are not locked securely, the system may not operate when needed.)
- Always store the steering wheel pad with the pad surface facing upward. (Storing the pad with its metallic surface up may lead to serious accident if the air bag inflates for some reason.)
- When installing the spiral cable, be sure the vehicle is in the straight ahead condition and comfirm that the spiral cable is in the neutral position when it is installed. (See page BE-44)
- INFORMATION LABELS (NOTICE) are attached to the periphery of the air bag components. Follow the NOTICE.

2. AUDIO SYSTEM

- If the battery negative (—) terminal is disconnected, the preset AM, FM 1 and FM 2 stations stored in memory are erased, so be sure to note the stations and reset them after the bettery terminal is reconnected.
- If the battery negative (—) terminal is disconnected, the ''ANTI-THEFT SYSTEM'' will operate when the terminal is reconnected, but the radio, tape player and CD player will not operate. Be sure to input the correct ID number so that the radio, tape player and CD player can be operated again.

LOCATION OF SWITCHES AND RELAYS

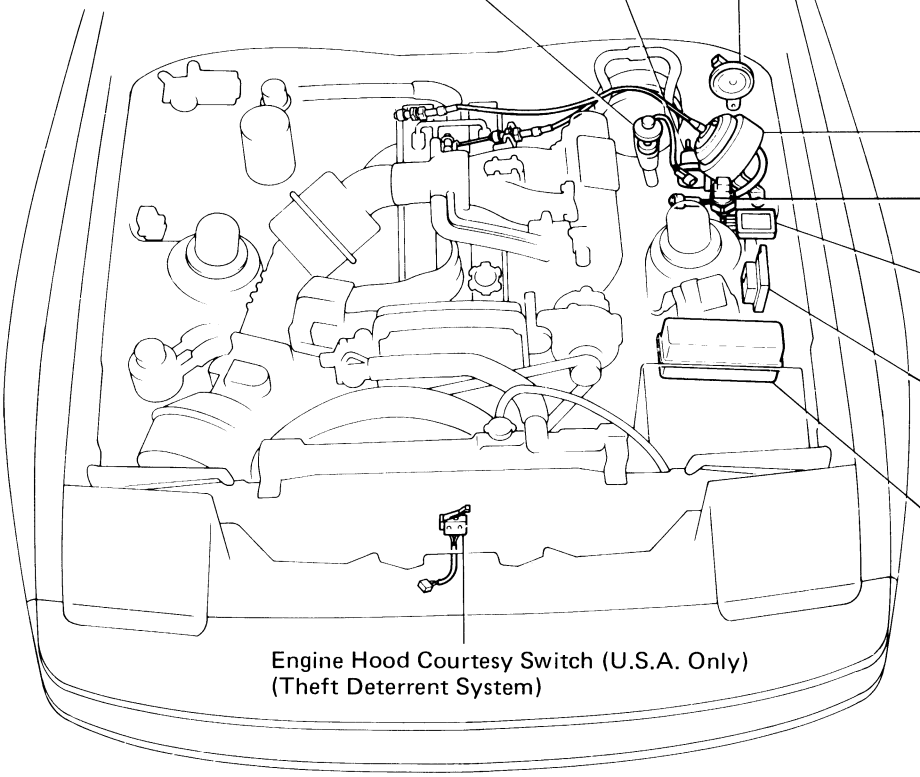

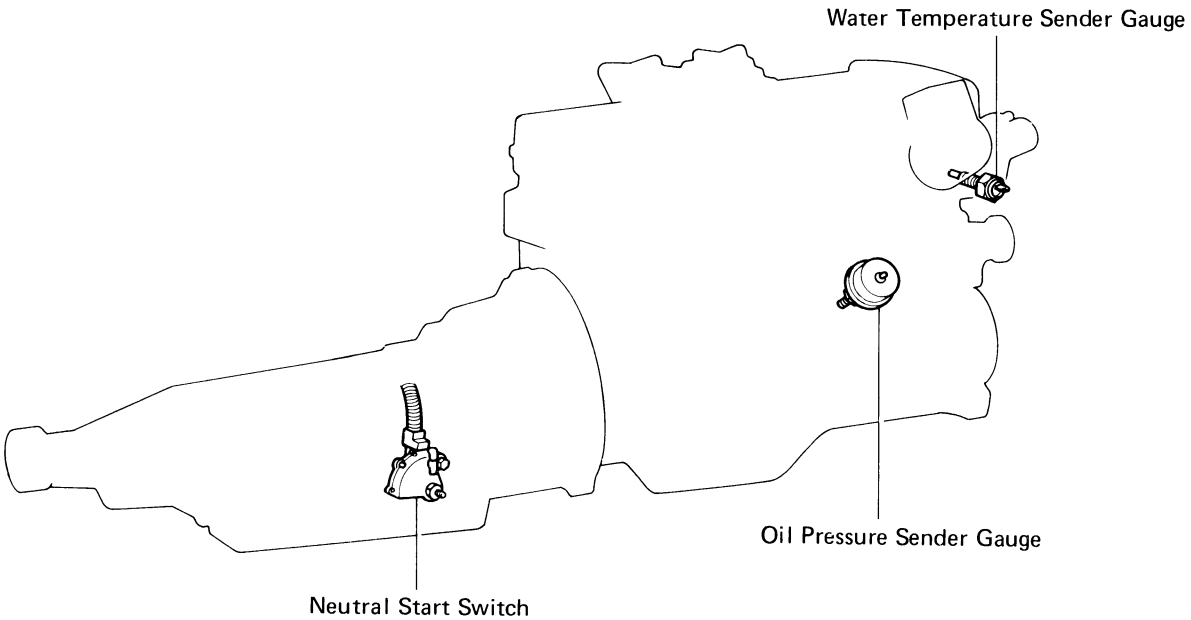

BE2908
BE2909

LOCATION OF SWITCHES AND RELAYS (Cont'd)

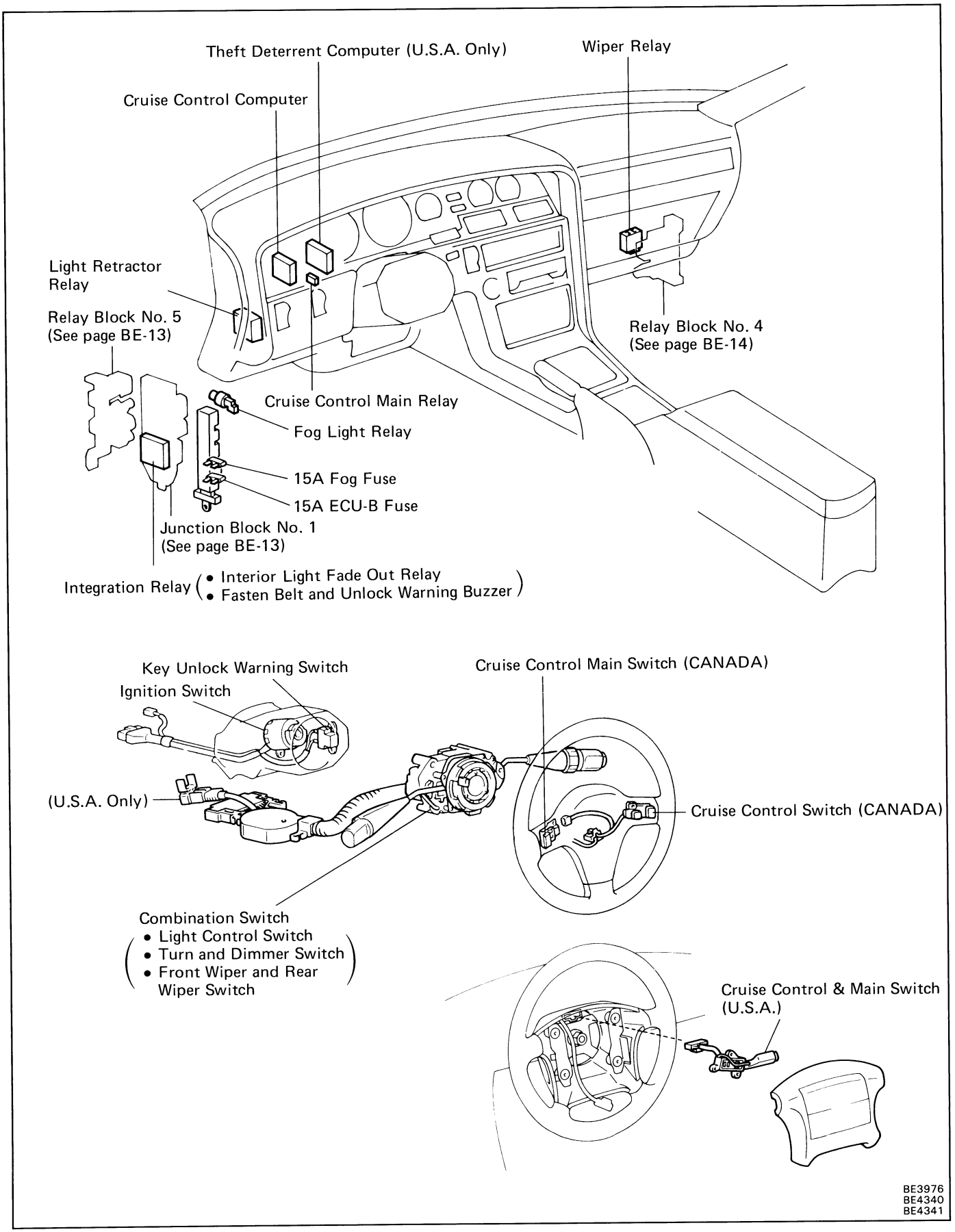

LOCATION OF SWITCHES AND RELAYS (Cont'd)

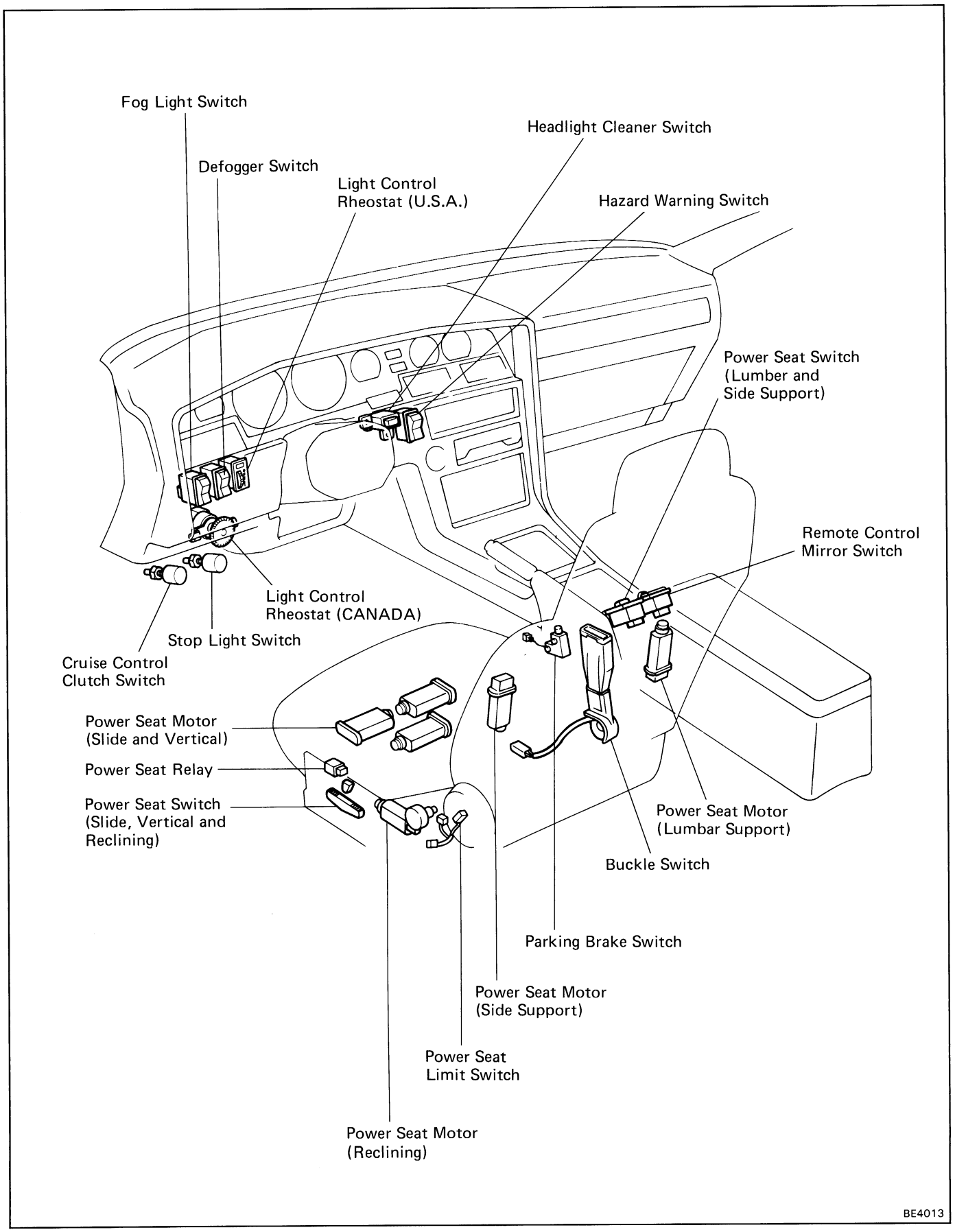

LOCATION OF SWITCHES AND RELAYS (Cont'd)

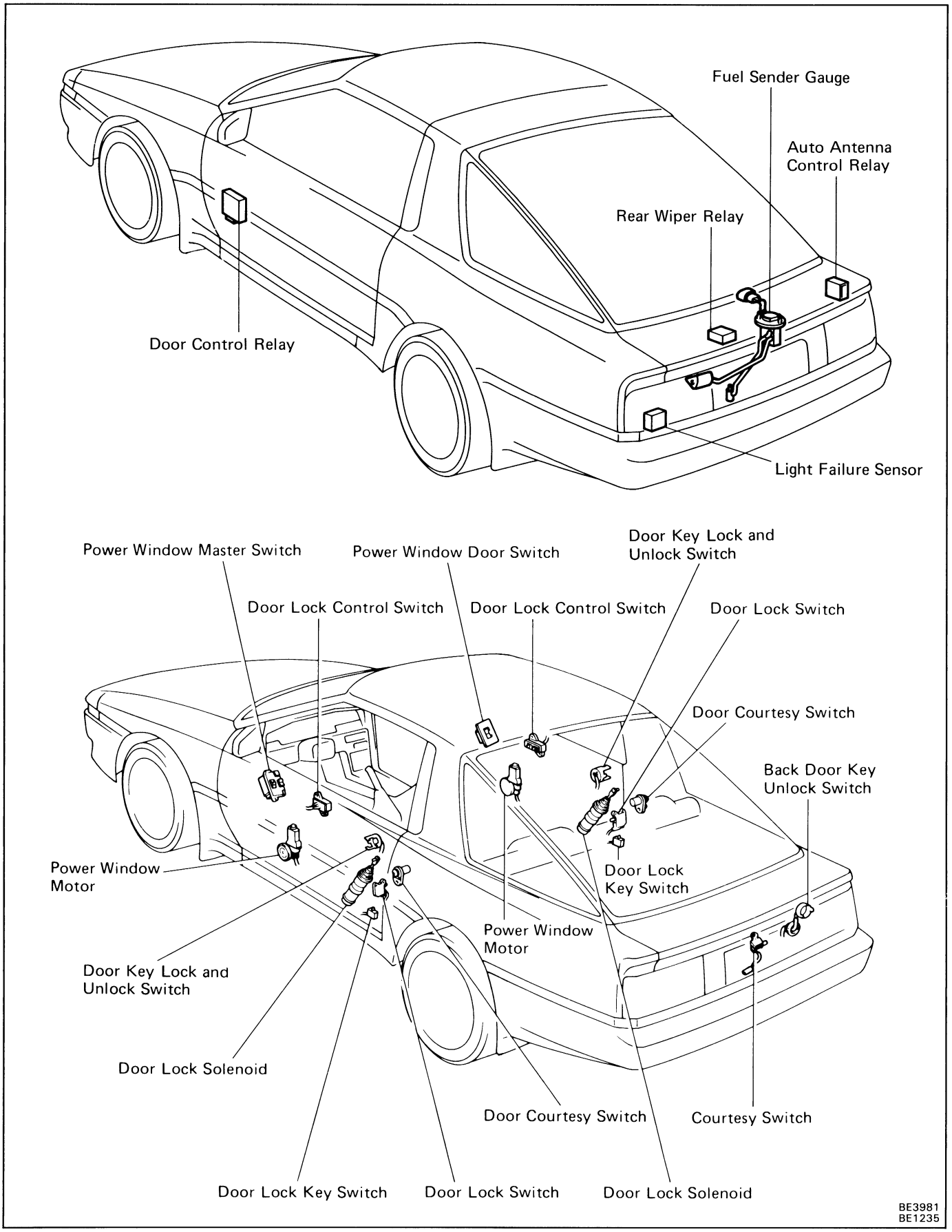

FUSE AND RELAY BLOCKS

JUNCTION BLOCK NO. 1 AND RELAY BLOCK NO. 5 (LOCATION: Driver's Side Kick Panel)

(No. 1)

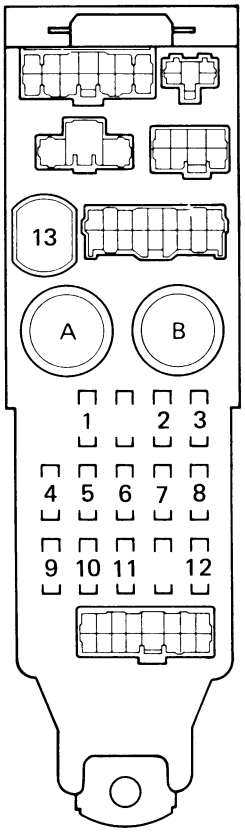

(No. 5)

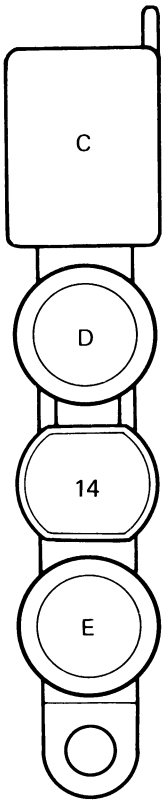

Fuses

1.	GAUGE	7.5A
2.	STOP	20A
3.	TAIL	15A
4.	CIG	15A
5.	RADIO	7.5A
6.	TURN	7.5A
7.	MIR-HTR	10A
8.	—	
9.	ENGINE	15A
10.	WIPER	20A
11.	ECU-IG	15A
12.	IGN	7.5A
13.	Circuit Breaker (Defogger)	30A
14.	Circuit Breaker (Power)	30A

Relays

A. Defogger Relay
B. Taillight Relay
C. Turn Signal Control Relay
D. Power Main Relay
E. Horn Relay

BE1259 BE1261

FUSE AND RELAY BLOCKS (Cont'd)

JUNCTION BLOCK NO. 2 (LOCATION: Engine Compartment)

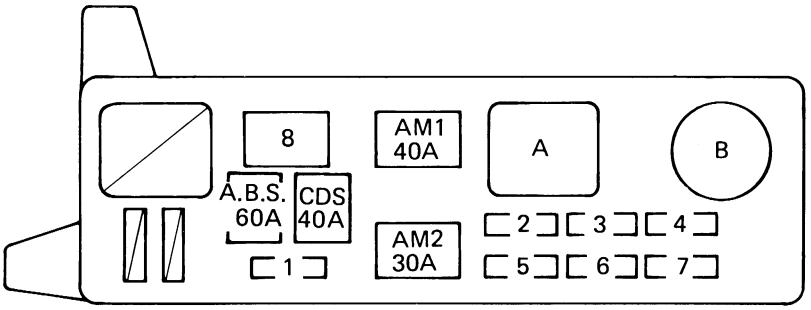

Fuses

1.	RTR	30A
2.	TEL	15A
3.	HEAD (LH)	15A
4.	HEAD (RH)	15A
5.	HAZ-HORN	15A
6.	DOME	20A
7.	EFI	15A
8.	ALT	100A

Relays
A. Headlight Relay
B. EFI Main Relay

RELAY BLOCK NO. 4 (LOCATION: Passenger's Side Kick Panel)

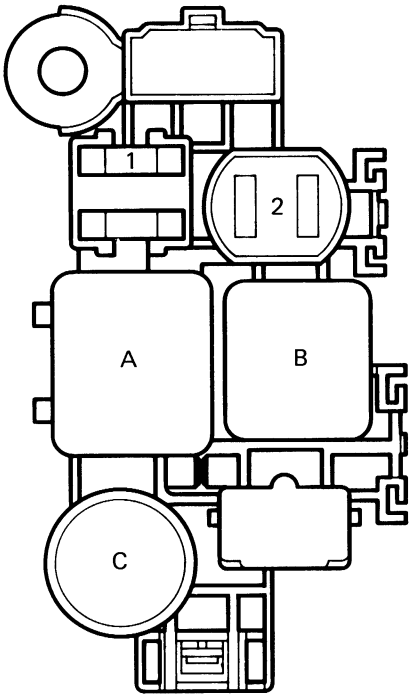

Fuses

1.	A/C	10A
2.	Circuit Breaker (Heater)	40A

Relays
A. Circuit Opening Relay
B. Heater Relay
C. Clutch Starter Relay

BE1260
BE3968

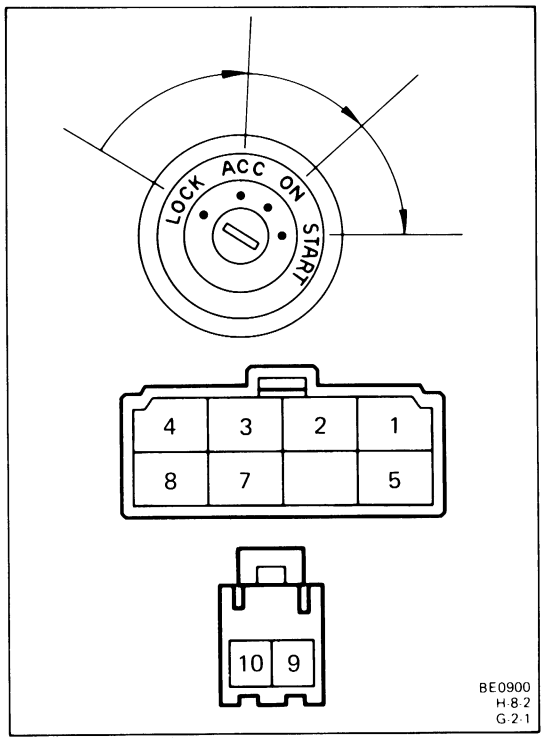

IGNITION SWITCH

INSPECTION OF SWITCH

INSPECT SWITCH CONTINUITY

Inspect the switch continuity between terminals.

Terminal / Switch Position		1	2	3	4	5	7	8	9	10
LOCK										
ACC				○—○						
ON			○—○	—○			○—○			
START		○—○	——	—○		○—○	—○			
Warning	Normal									
	Push								○—○	

If continuity is not as specified, replace the switch.

Daytime Running Light System (CANADA only)

Wiring and Connectors Diagram

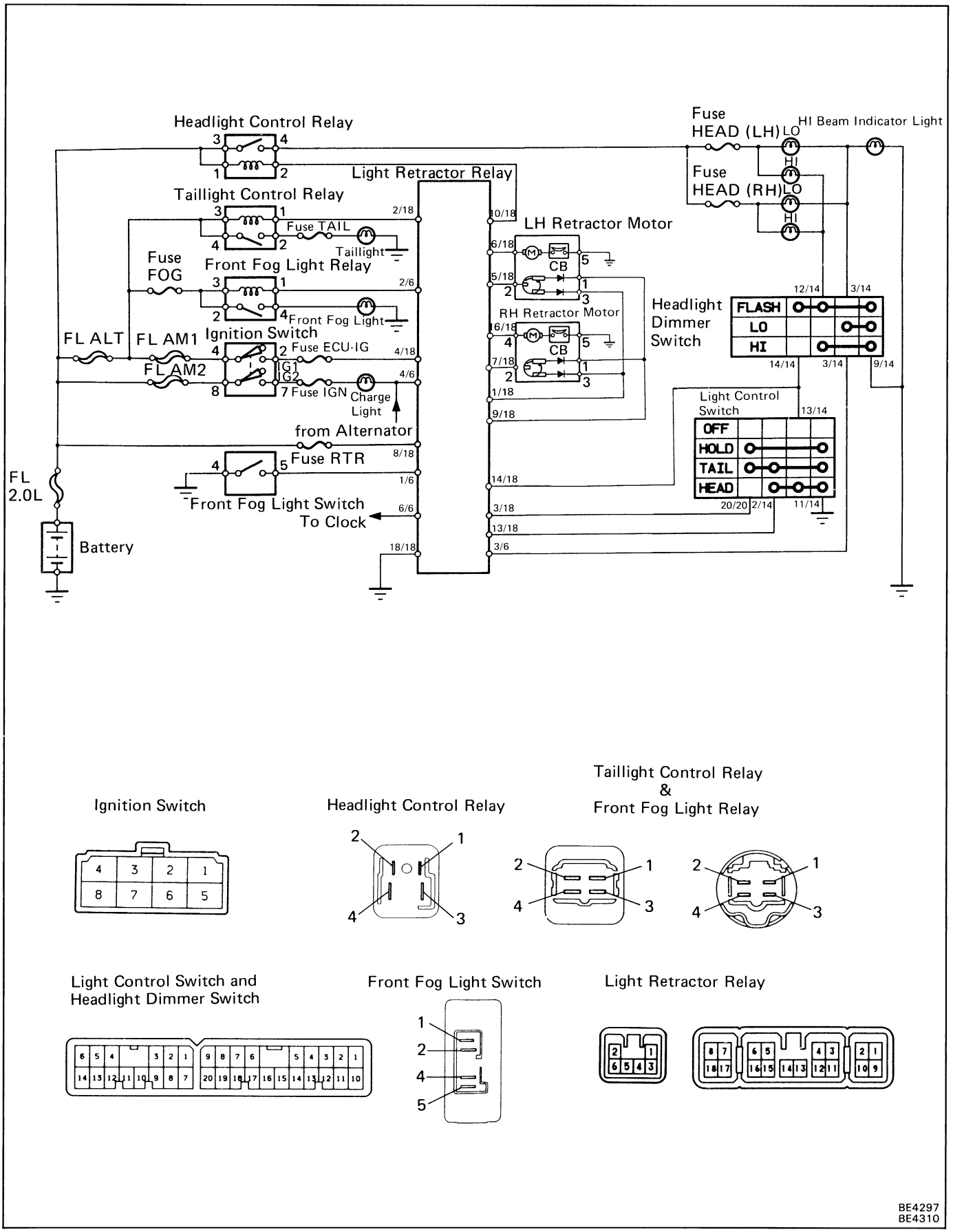

LIGHTING
Troubleshooting

Problem	Possible cause	Remedy	Page
Only one light does not light (all exterior)	Light bulb burned out Socket, wire or ground faulty	Replace bulb Repair as necessary	
Headlights do not flip up	Fusible link blown RTR fuse blown Light retractor control relay faulty Light retractor motor faulty Wiring or ground faulty	Replace fusible link Replace fuse and check for short Check relay Check motor Repair as necessary	 BE-4 BE-23 BE-24
No headlights light	Fusible link blown Headlight control relay faulty Light control switch faulty Wiring or ground faulty	Replace fusible link Check relay Check switch Repair as necessary	 BE-22 BE-22
High beam headlights or headlight flasher do not operate	Light control switch faulty Wiring faulty	Check switch Repair as necessary	BE-22
Tail and license lights do not light	TAIL fuse blown Fusible link blown Taillight control relay faulty Light control switch faulty Light retractor control relay faulty (CANADA) Wiring or ground faulty	Replace fuse and check for short Replace fusible link Check relay Check switch Check relay Repair as necessary	BE-4 BE-22 BE-22 BE-23
Stop lights do not light	STOP fuse blown Stop light switch faulty Wiring or ground faulty	Replace fuse and check for short Adjust or replace switch Repair as necessary	BE-4
Stop lights stay on	Stop light switch faulty	Adjust or replace switch	
Instrument lights do not light (taillights light)	Light control rheostat faulty Wiring or ground faulty	Check rheostat Repair as necessary	BE-28
Turn signal does not flash on one side	Turn signal switch faulty Wiring or ground faulty	Check switch Repair as necessary	BE-22
Turn signals do not operate	TURN fuse blown Turn signal flasher faulty Turn signal switch faulty Wiring or ground faulty	Replace fuse and check for short Check flasher Check switch Repair as necessary	BE-4 BE-26 BE-22
Hazard warning lights do not operate	HAZ-HORN fuse blown Turn signal flasher faulty Hazard warning switch faulty Wiring or ground faulty	Replace fuse and check for short Check flasher Check switch Repair as necessary	BE-4 BE-26 BE-26

Parts Replacement

Components

U.S.A. (w/ Airbag System)

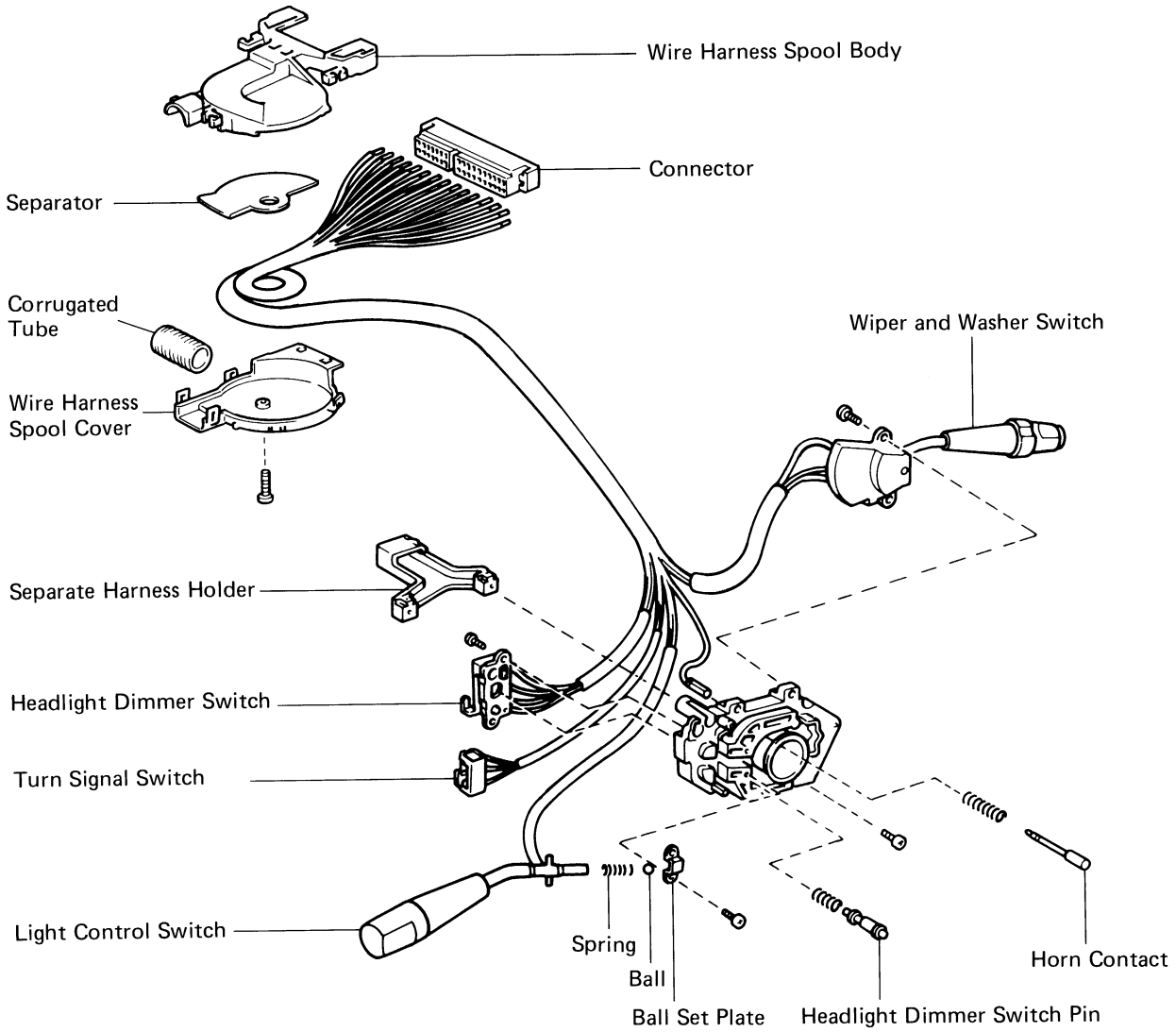

w/ Airbag

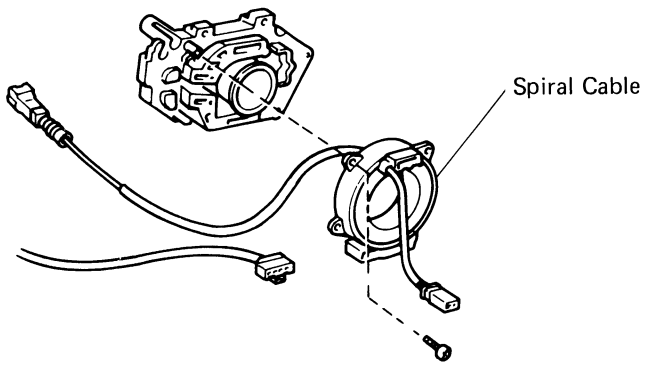

BE4352

Parts Replacement (Cont'd)

Components

CANADA (w/o Airbag System)

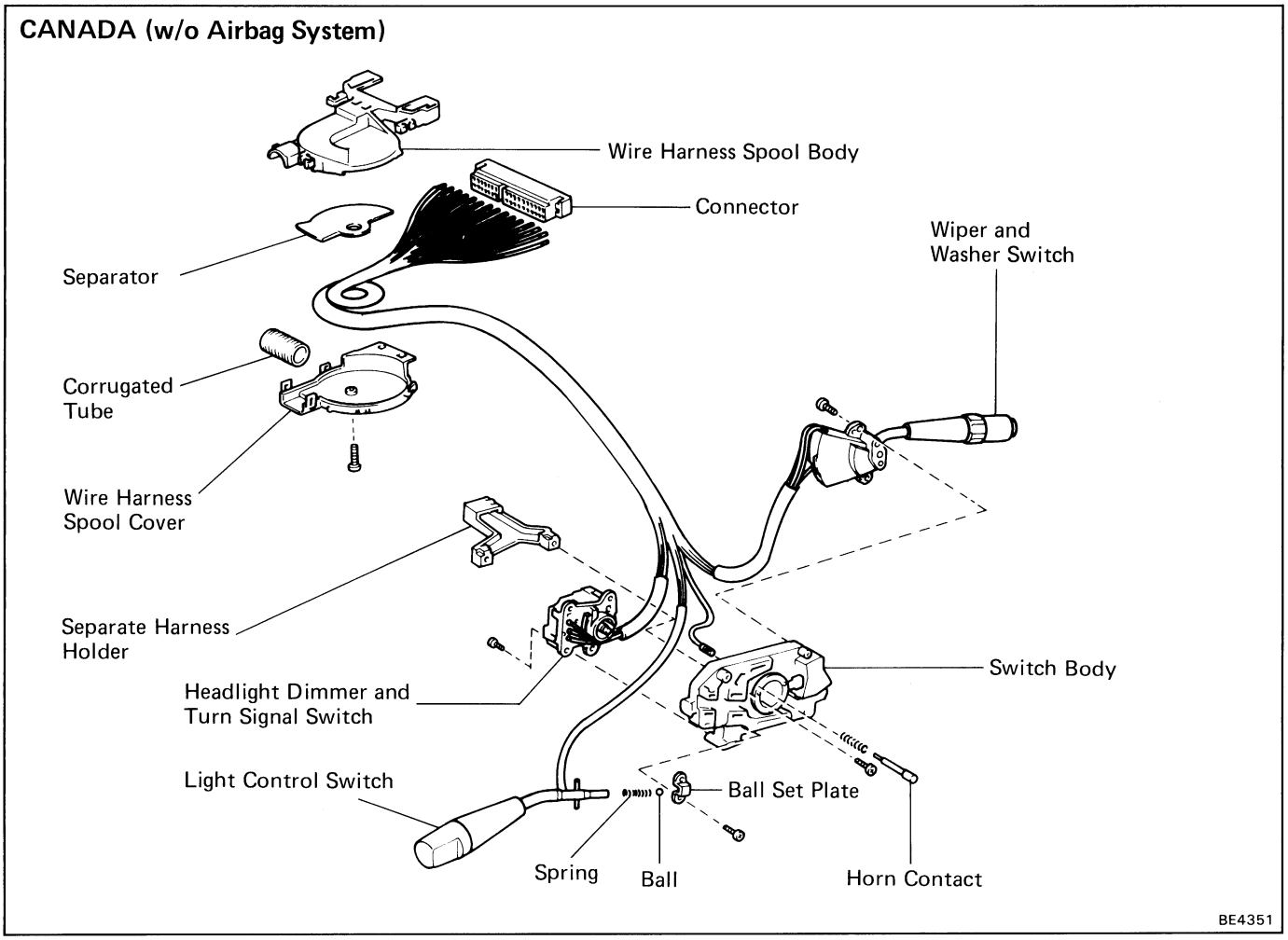

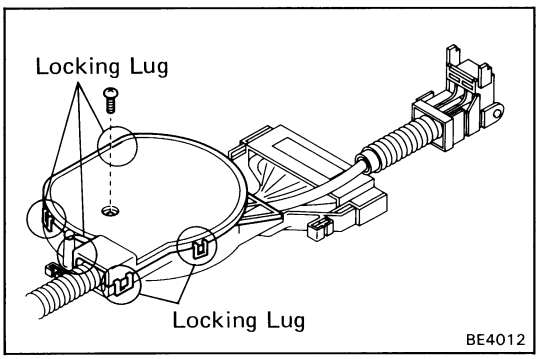

Disassembly of Combination Switch

1. **REMOVE WIRE HARNESS SPOOL COVER**

   Remove one screw and pry loose three locking lugs.

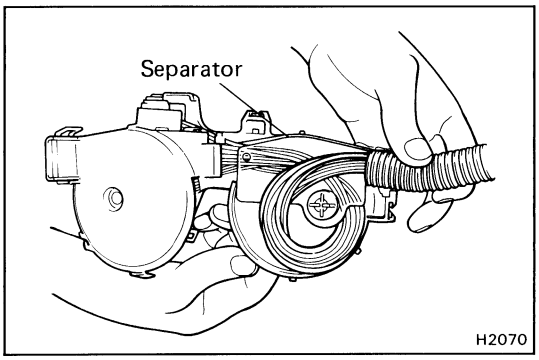

2. **REMOVE SEPARATOR**

   Remove the separator from the spool body.

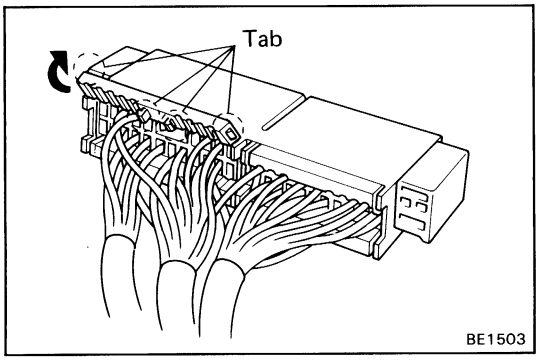

3. REMOVE TERMINALS FROM CONNECTOR

(a) Release four tabs and open the terminal cover.

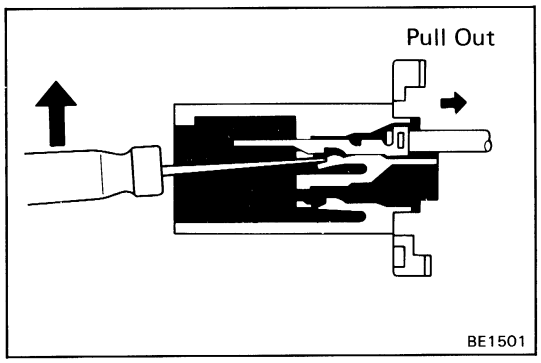

(b) From the open end, insert a miniature screwdriver between the locking lug and terminal.

(c) Pry down the locking lug with the screwdriver and pull the terminal out from the rear.

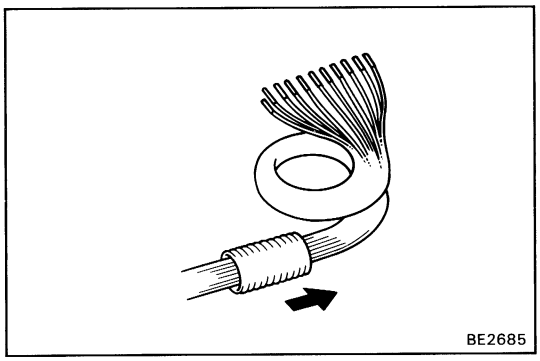

4. REMOVE CORRUGATED TUBE

Pull out the corrugated tube from the wire harness.

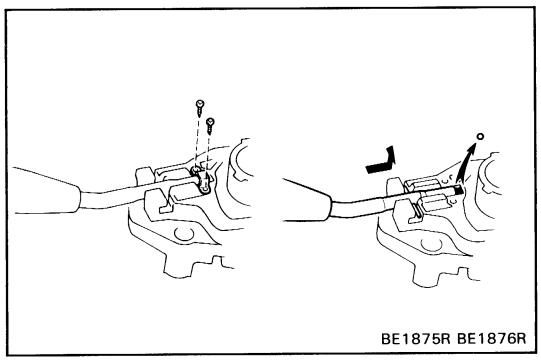

5. REMOVE LIGHT CONTROL SWITCH

(a) Remove two screws and the ball set plate from the switch body.

(b) Remove the ball and slide out the switch from the switch body with the spring.

6. REMOVE HEADLIGHT DIMMER AND TURN SIGNAL SWITCH

(CANADA)

Remove four screws and the switch from the switch body.

(U.S.A.)

(a) Pry loose two locking lugs and remove the turn signal switch from the switch body.

(b) Remove two screws and the headlight dimmer switch from the switch body.

(c) Remove the headlight dimmer switch pin from the switch body with the spring.

7. REMOVE WIPER AND WASHER SWITCH

Remove two screws and the switch from the switch body.

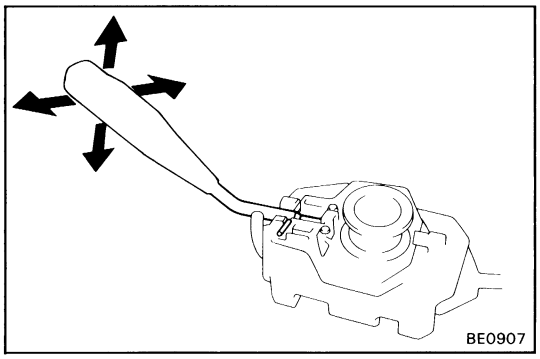

Assembly of Combination Switch

INSTALL PARTS OF COMBINATION SWITCH IN REVERSE SEQUENCE OF DISASSEMBLY

HINT:

- After installing the light control switch to the switch body, insure that the switch operates smoothly.

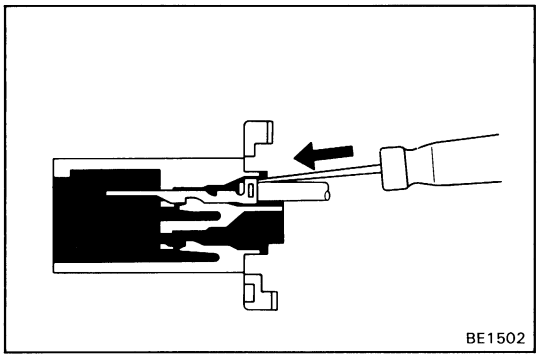

- Push in the terminal unit until it is securely locked in the connector lug.

Reference:

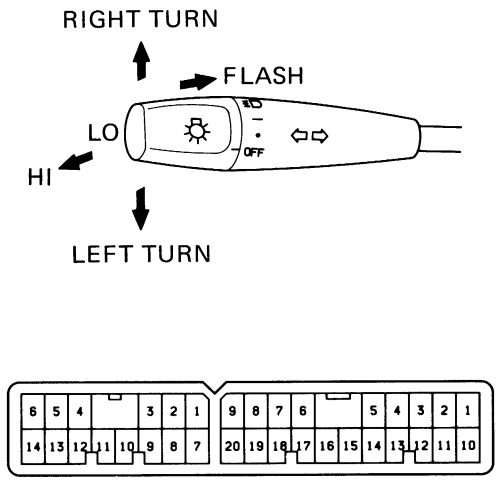

BE4100
V-34-2

Parts Inspection

Headlight and Taillight System

1. INSPECT COMBINATION SWITCH
(Light Control Switch/Continuity)

Terminal (Wire color) / Switch position	20/20 (G)	2/14 (Clear)	11/14 (W)	13/14 (R)
OFF				
UP	○		○	
TAIL	○	○	○	
HEAD		○	○	○

(Headlight Dimmer and Turn Signal Switch/Continuity)

Headlight Dimmer Switch

Terminal (Color) / Switch position	3/14 (R-G)	9/14 (W-B)	12/14 (R-Y)	14/14 (R-W)
Flash		○	○	○
Low beam	○	○		
High beam		○	○	

Turn Signal Switch

Terminal (Color) / Switch position	1/14 (G-W)	5/14 (G-B)	8/14 (G-Y)
Left turn	○	○	
Neutral			
Right turn	○		○

If continuity is not as specified, replace the switch.

2. INSPECT RELAY
(Headlight Control Relay/Continuity)

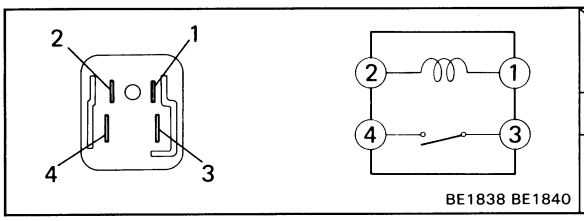

BE1838 BE1840

Terminal / Condition	1	2	3	4
Constant	○	○		
Apply battery voltage to terminals 1 and 2.			○	○

(Taillight Control Relay/Continuity)

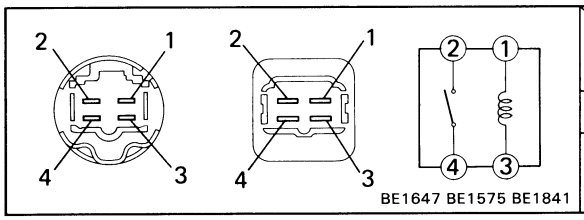

BE1647 BE1575 BE1841

Terminal / Condition	1	2	3	4
Constant	○	○	○	
Apply battery voltage to terminals 1 and 3.		○		○

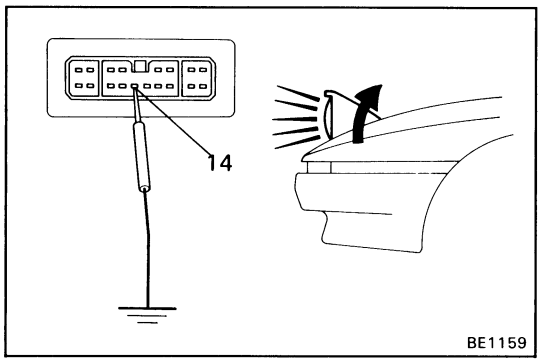

Light Retractor Control System

1. INSPECT LIGHT RETRACTOR CONTROL RELAY (Relay Operation)

(a) Turn the light control switch off.

(b) With connector connected, ground the terminal 14.

(c) Check that the headlights rise with the light lit.

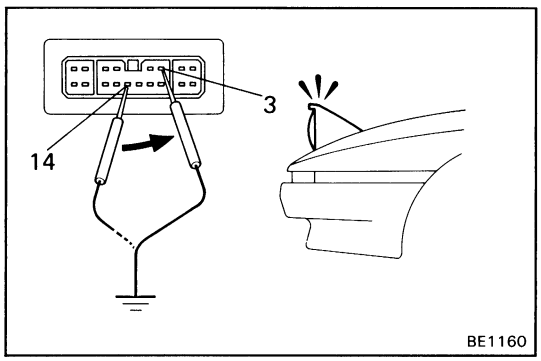

(d) Quickly ground terminal 3. The light will go out, but the headlight should remain up.

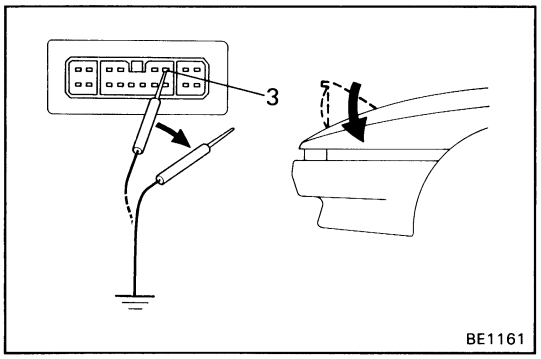

(e) When terminal 3 is taken off ground, the headlights should flip down.

If operation is not as specified, replace the relay.

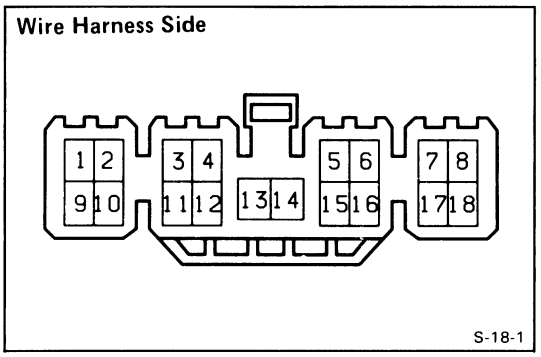

(Relay Circuit)

Disconnect the relay and inspect the connector on the wire harness side as shown in the chart below.

HINT: This circuit includes the diode, if the circuit shows no continuity change the positive and negative probes and recheck the circuit.

Check For	Tester Connection	Condition		Specified Value
Voltage	8 – Ground	—		Battery voltage
Continuity	18 – Ground	—		Continuity
Voltage	4 – Ground	Ignition switch position	LOCK or ACC	No voltage
			ON	Battery voltage
	2 – Ground	—		Battery voltage
	10 – Ground	—		Battery voltage
	15 – Ground	Door position	Closed (Courtesy switch OFF)	Battery voltage
			Opened (Courtesy switch ON)	No voltage

Voltage	17 – Ground (U.S.A. only)	Light switch HEAD, Dimmer switch Low and Front Fog switch ON		Battery voltage
		Any other position		No voltage
Continuity	3 – Ground	Light control switch position	OFF or HEAD	No continuity
			HOLD or TAIL	Continuity
	13 – Ground	Light control switch position	OFF or HOLD	No continuity
			TAIL or HEAD	Continuity
	6, 16 – Ground	–		Continuity
	14 – Ground	Light control switch position: OFF, HOLD or TAIL		
		Headlight dimmer switch position	Low beam or High beam	No continuity
			Flash	Continuity
		Light control switch position: HEAD		Continuity
	5 – 1	Headlight lowermost position		No continuity
	7 – 1	Headlight any position except lowermost position		Continuity
	5 – 9	Headlight uppermost position		No continuity
	7 – 9	Headlight any position except uppermost position		Continuity
	11 – Ground (U.S.A. only)	Theft deterrent system does not operate	No continuity	
		Theft deterrent system is operating	Alternates continuity/no continuity	

If circuit is as specified, replace the relay.

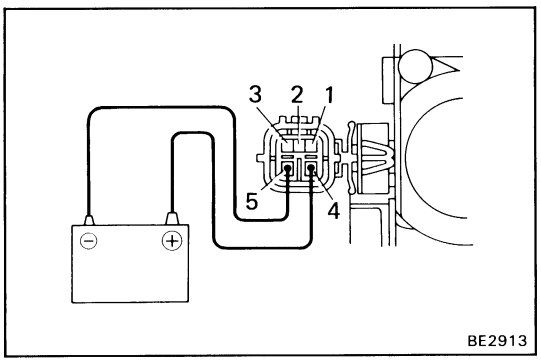

2. INSPECT LIGHT RETRACTOR MOTOR

(Motor Operation)

(a) Connect the positive (+) lead from the battery to terminal 4 and the negative (–) lead to terminal 5.

(b) Check that the motor operates.

If there is no motor operation, replace the motor.

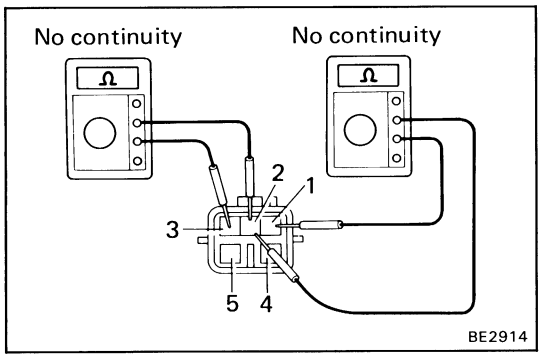

(Diode Continuity)

(a) Move the headlights to any position except the uppermost or lowermost positions.

(b) Connect the ohmmeter positive (+) lead to terminal 1 and the negative (–) lead to terminal 2.

(c) Check that there is no continuity.

(d) Connect the ohmmeter positive (+) lead to terminal 3 and the negative (–) lead to terminal 2.

(e) Check that there is no continuity.

If there is continuity, replace the motor assembly.

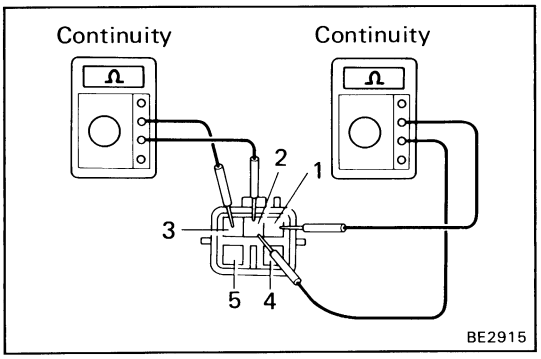

(f) Reverse the test leads of the ohmmeter.

(g) Check that there is continuity.

If there is no continuity, replace the motor assembly.

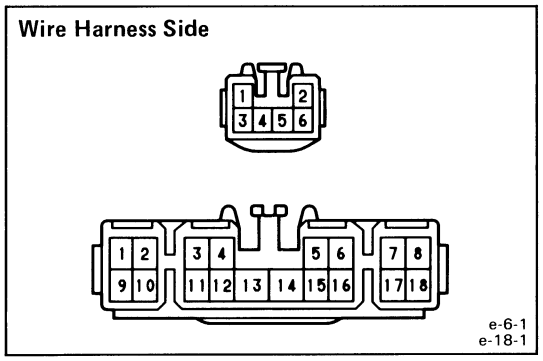

Daytime Running Light System

INSPECT LIGHT RETRACTOR RELAY

(Relay Circuit)

Disconnect the connector from the relay and inspect the connector on the wire harness side as shown in the chart.

Check for	Tester connection	Condition		Specified value
Continuity	1/6 — Ground	Front fog light switch position	OFF	No continuity
			ON	Continuity
	13/18 — Ground	Light control switch position	OFF or HOLD	No continuity
			TAIL or HEAD	Continuity
	3/18 — Ground	Light control switch position	OFF or HEAD	No continuity
			HOLD or TAIL	Continuity
	18/18 — Ground	—		Continuity
	14/18 — Ground	Light control switch position: OFF, HOLD or TAIL		
		Headlight dimmer switch position	Low beam or High beam	No continuity
			Flash	Continuity
		Light control switch position: HEAD		Continuity
Voltage	8/18 — Ground	—		Battery voltage
	4/18 — Ground	Ignition switch position	LOCK or ACC	No voltage
			ON	Battery voltage
	2/6 — Ground	—		Battery voltage
	4/6 — Ground	Engine	Stop	No voltage
			Running	Battery voltage
	2/18 — Ground	—		Battery voltage
	3/6 — Ground	Light control switch HEAD and Dimmer switch Low		No voltage
		Light control switch HEAD and Dimmer switch High		Battery voltage

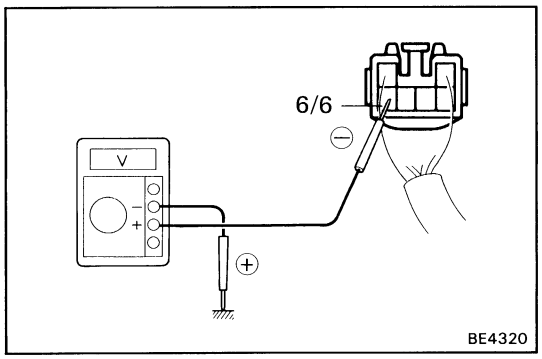

If circuit is specified, inspect relay operation.

(Relay Operation)

(a) Connect the positive (+) lead from the voltmeter to terminal 6/6 and negative (—) lead to the ground.

(b) Check that there is battery voltage with light control switch is turned on.

If operation is not as specified, replace the relay.

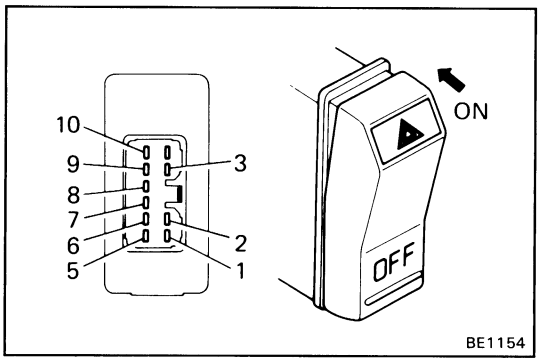

Turn Signal and Hazard Warning System

1. INSPECT SWITCHS
(Turn Signal Switch/Continuity)

See Headlight Dimmer and Turn Signal Switch on page BE-22.

(Hazard Warning Switch/Continuity)

Terminal / Switch Position	1	2	3	5	6	7	8	9	10
OFF						○—○		○—○	
			○—○		○—○				○—○
ON	○—○	○—○		○—○			○—○		
					○—○	○—○			
			○—○		○—○				○—○

If continuity is not as specified, replace the switch or bulb.

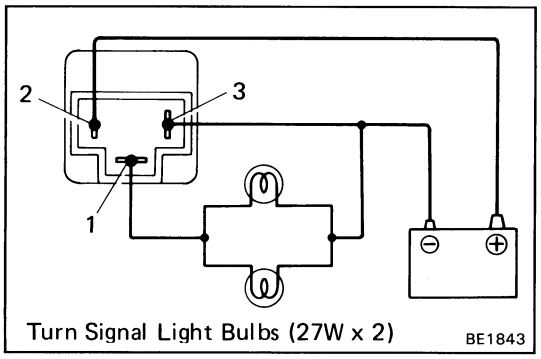

2. INSPECT TURN SIGNAL FLASHER
(Operation)

(a) Connect the positive (+) lead from the battery to terminal 2 and the negative (−) lead to terminal 3.

(b) Connect the two turn signal light bulbs parallel to each other to terminals 1 and 3, check that the bulbs flash.

HINT: The turn signal lights should flash 60 to 120 times per minute.

If one of the front or rear turn signal lights has an open circuit, the number of flashers will be more than 140 per minute.

If operation is not as specified, replace the flasher.

Fog Light System

1. INSPECT SWITCH CONTINUITY

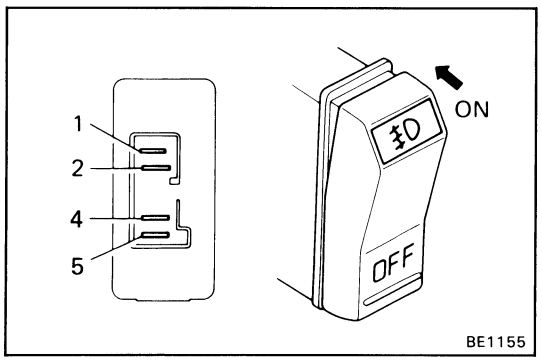

Terminal / Switch Position	1	2	4	5
OFF	○—○	○—○		
ON	○—○	○—○	○—○	○—○

If continuity is not as specified, replace the switch or bulb.

2. INSPECT FOG LIGHT RELAY

See Taillight Control Relay on page BE-22.

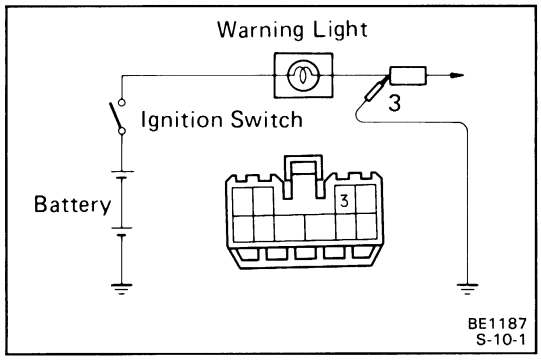

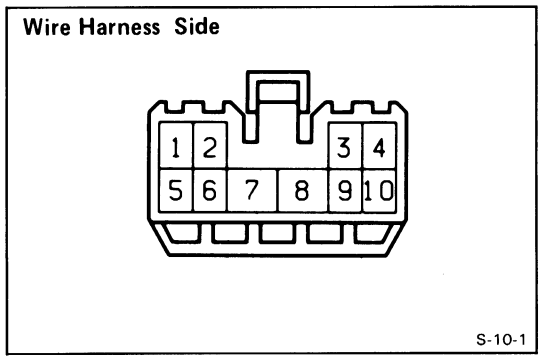

Taillight Failure Sensor System

INSPECT FAILURE SENSOR

1. INSPECT WARNING LIGHT OPERATION

(a) Disconnect the connector from the failure sensor. Ground the terminal 3 of wire harness side connector.

(b) Turn the ignition switch on.

(c) Check that the bulb lights.

If operation is not as specified, remove and test the bulb.

2. INSPECT FAILURE SENSOR CIRCUIT

Disconnect the failure sensor and inspect the connector on the wire harness side as shown in the following chart.

Terminal	Check Item	Tester Connection	Condition	Voltage or Continuity
1	Continuity	1 – Body Ground	–	Continuity
2	Voltage	2 – Body Ground	Turn ignition switch on	Battery voltage
			Turn ignition switch off	No voltage
3	Voltage	3 – Body Ground	Turn ignition switch on	Battery voltage
4	Continuity	4 – Body Ground	–	Continuity
7	Voltage	7 – Body Ground	Depress brake pedal	Battery voltage
			Return brake pedal	No voltage
9	Continuity	9 – Body Ground	–	Continuity
10	Voltage	10 – Body Ground	Turn taillight switch on	Battery voltage
			Turn taillight switch off	No voltage

If circuit is correct as specified above, replace the failure sensor.

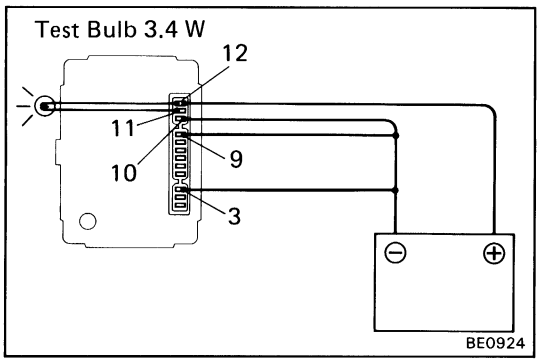

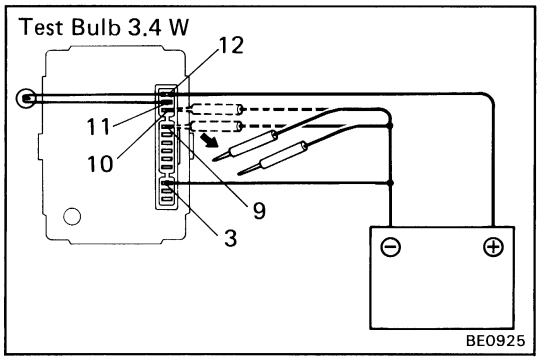

Integration Relay

INSPECT INTEGRATION RELAY

INSPECT RELAY OPERATION (KEY ILLUMINATION)

(a) Connect the positive (+) lead from the battery to terminal 12 and the negative (−) lead to terminals 3, 9 and 10.

(b) Connect a 3.4W test bulb between terminals 11 and 12.

(c) Check that the bulb lights.

(d) Disconnect the negative (−) lead from the battery to terminals 9 and 10, and check that the bulb goes out 5 seconds later.

If operation is not as specified, replace the relay.

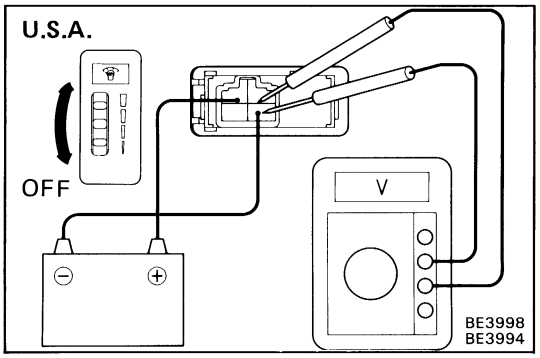

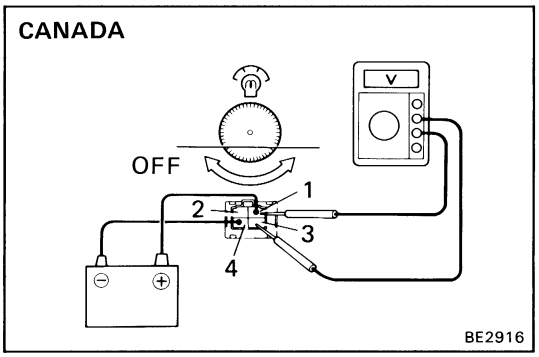

Light Control Rheostat

INSPECT RHEOSTAT

INSPECT RHEOSTAT OPERATION

(a) Connect the positive (+) lead from the battery to terminal 2 (U.S.A.) or 1 (CANADA) and the negative (−) lead to terminal 3 (U.S.A.) or 4 (CANADA).

(b) Gradually charge the brightness of rheostat from minimum to maximum, check that the voltage between terminals 1 and 3 increases from 0 to 12 V.

(c) Check that there is no voltage between terminals with the rheostat turned off.

If operation is not as specified, replace the rheostat.

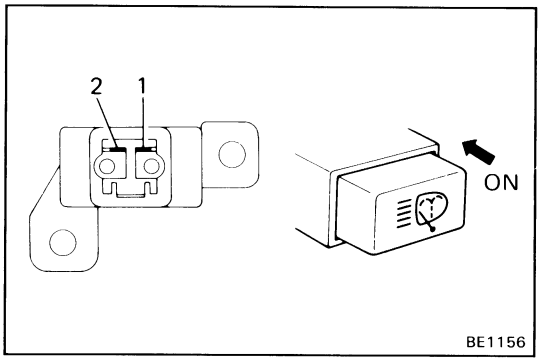

HEADLIGHT CLEANER (CANADA Only)

Part Inspection

1. INSPECT HEADLIGHT CLEANER SWITCH

Inspect switch continuity between terminals.

Terminal / Switch Position	1	2
OFF		
ON	○	○

If continuity is not as specified, replace the switch.

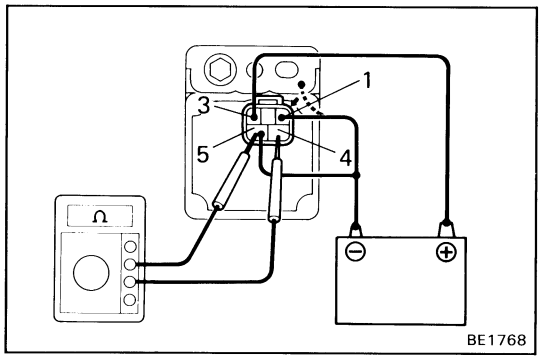

2. INSPECT HEADLIGHT CLEANER CONTROL RELAY

(a) Ckeck that there is no continuity between terminals 4 and 5.

(b) Connect the positive (+) lead from the battery to terminal 3 and the negative (—) leads to terminals 1 and 5.

(c) Check that there is continuity between terminals 4 and 5 for 0.4 to 0.6 seconds, then there is no continuity.

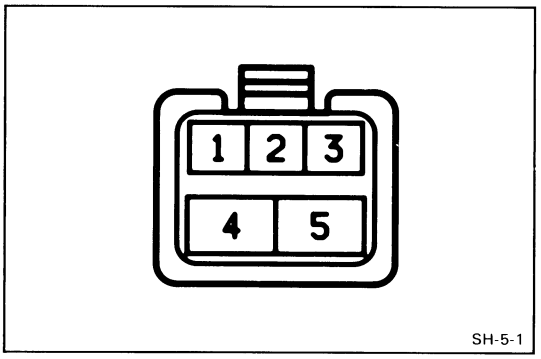

3. INSPECT RELAY CIRCUIT

(a) Disconnect the control relay and inspect the connector on the wire harness side as shown in the chart below.

Terminal	Check Item	Tester Connection	Condition	Voltage or Continuity
1	Continuity	1 – Body Ground	Turn light control switch to HEAD and turn headlight cleaner switch on	Continuity
			Turn light control switch to OFF or turn headlight cleaner switch off	No continuity
3	Voltage	3 – Body Ground	Turn ignition switch to ON	Battery voltage
			Turn ignition switch to LOCK or ACC	No voltage
5	Continuity	5 – Body Ground	–	Continuity

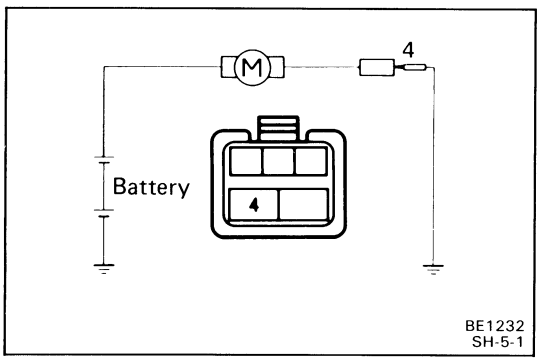

(b) With the terminal 4 of the connector side grounded, check that the cleaner motor operates.

NOTICE: These tests must be performed quickly (within 3 — 5 seconds) to prevent the coil from burning out.

If circuit is as specified, replace the relay.

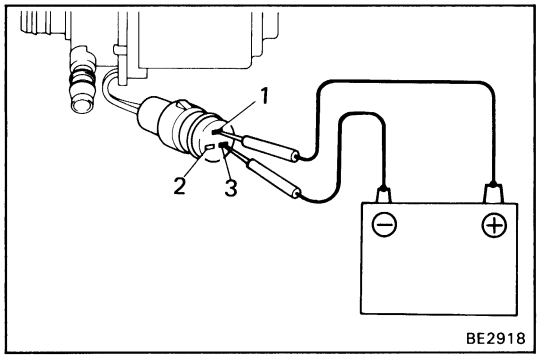

4. INSPECT MOTOR

(a) Connect the positive (+) lead from the battery to terminal 1 and the negative (—) lead to terminal 3.

(b) Check that the motor operates.

NOTICE: These tests must be performed quickly (within 3 — 5 seconds) to prevent the coil from burning out.

If operation is not as specified, replace the motor.

WIPERS AND WASHERS

Troubleshooting

Problem	Possible cause	Remedy	Page Front	Page Rear
Wipers do not operate or return to off position	WIPER fuse blown	Replace fuse and check for short	BE-4	BE-4
	Wiper motor faulty	Check motor	BE-33	BE-34
	Wiper switch faulty	Check switch	BE-31	BE-34
	Wiring or ground faulty	Repair as necessary		
Wipers do not operate in INT position	Wiper relay faulty	Check relay	BE-31	BE-34
	Wiper switch faulty	Check switch	BE-31	BE-34
	Wiper motor faulty	Check motor	BE-33	BE-34
	Wiring or ground faulty	Repair as necessary		
Washers do not operate	Washer hose or nozzle clogged	Repair as necessary		
	Washer motor faulty	Replace motor		
	Washer switch faulty	Check switch	BE-31	BE-34
	Wiring faulty	Repair as necessary		

Reference:

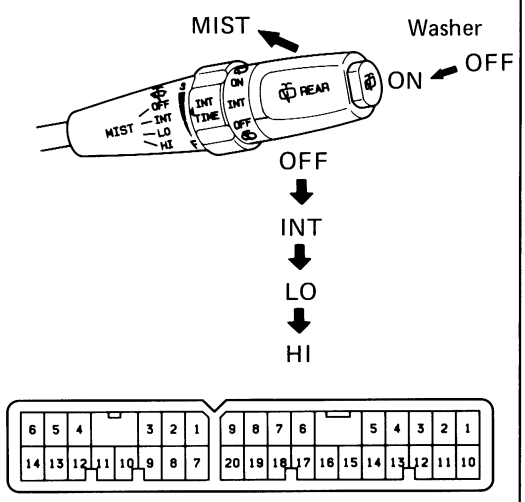

BE4109
V-34-2

Front Wiper and Washer Switch

INSPECT SWITCH

INSPECT SWITCH CONTINUITY

Inspect the switch continuity between terminals.

Switch	Terminal (Wire color) / Switch position	4/20 +S (L-R)	7/20 +1 (L-B)	8/20 W (L)	12/20 C_1 (Y-B)	13/20 +2 (L-O)	16/20 Ew (B)	18/20 +B (L-W)	6/20 VR_1 (Y)	14/20 VR_2 (Y)
Wiper	OFF	○—○								
	INT	○—○			○—○					
	LO		○—○					○		
	HI					○—○		○		
Washer	OFF									
	ON			○—○						
INT Time Control	SLOW	Approx. 50 kΩ							○—⁄—○	
	FAST								○—⁄—○	

If continuity is not as specified, replace the switch.

Wiper Control Relay

INSPECT CONTROL RELAY

1. INSPECT INTERMITTENT OPERATION

(a) Connect the positive (+) lead from the battery to terminal 5 and the negative (—) lead to terminal 7.

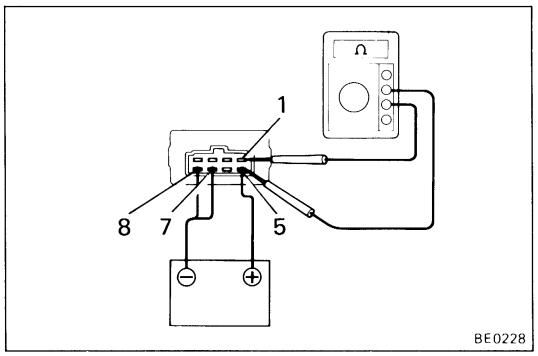

(b) With terminals 7 and 8 connected, check that continuity between terminals 1 and 5 are as shown in the following diagram.

Condition / Time (secs.)	Disconnect terminals 3 and 4	Connect terminals 3 and 4
Duration of continuity	0.8 ± 0.2	0.8 ± 0.2
Duration of non-continuity	10 ± 2.0	2.0 ± 0.4

If operation is not as specified, replace the relay.

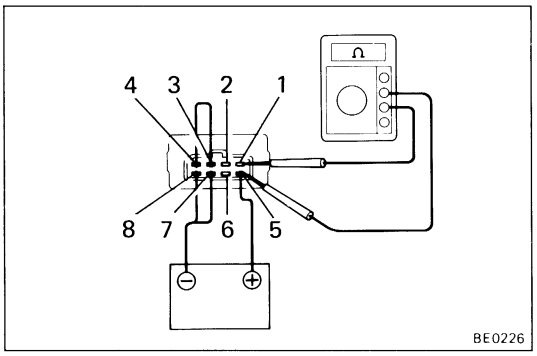

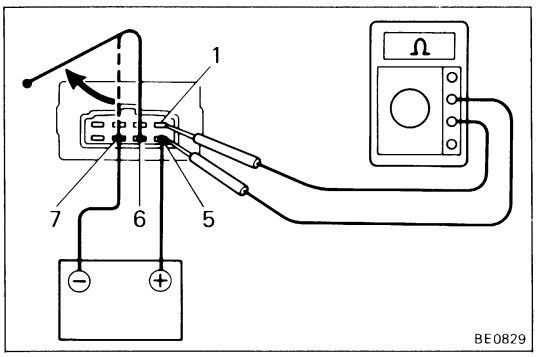

2. INSPECT WASHER CIRCUIT OF RELAY

(a) Connect the positive (+) lead from the battery to terminal 5 and the negative (−) lead to terminal 7.

(b) Inspect continuity between terminals 1 and 5 as follows.

Time (seconds)	Between terminals 1 and 5	Time (seconds)	Between terminals 1 and 5
Connect terminals 6 and 7	No Continuity	Disconnect terminals 6 and 7	Continuity
0.5 ± 0.1	↓ Continuity	2.5 ± 0.5	↓ No Continuity

If continuity is not as specified, replace the relay.

REPLACEMENT OF SWITCHES

(See page BE-18, 19)

REPLACE SWITCHES

(a) Remove the terminals from the connector. (See pages BE-2, 3)

(b) Remove the wiper and washer switch.

(c) Install the wiper and washer switch.

(d) Install the terminals to the connector. (See pages BE-3, 31)

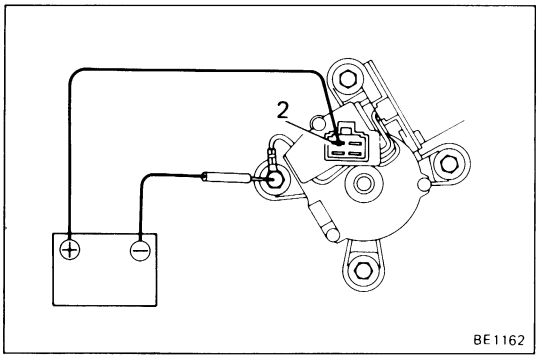

Front Wiper Motor

INSPECT MOTOR

1. INSPECT MOTOR OPERATES AT LOW SPEED

(a) Disconnect the connector from the wiper motor.

(b) Connect the positive (+) lead from the battery to terminal 2 and the negative (—) lead to the motor body.

(c) Check that the motor operates at low speed.

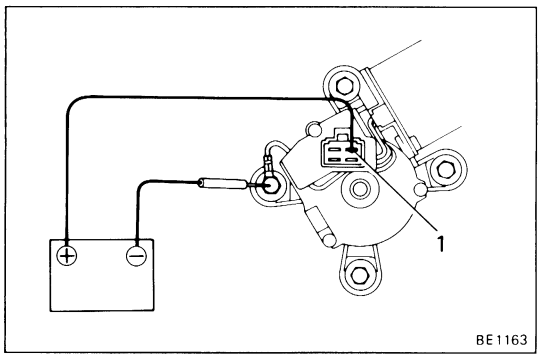

2. INSPECT MOTOR OPERATES AT HIGH SPEED

(a) Connect the positive (+) lead from the battery to terminal 1 and the negative (—) lead to the motor body.

(b) Check that the motor operates at high speed.

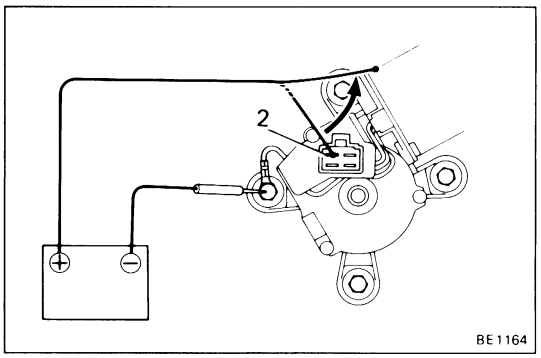

3. INSPECT MOTOR OPERATES, STOPPING AT STOP POSITION

(a) Operate the motor at low speed.

(b) Stop motor operation anywhere except at the off position by disconnecting terminal 2.

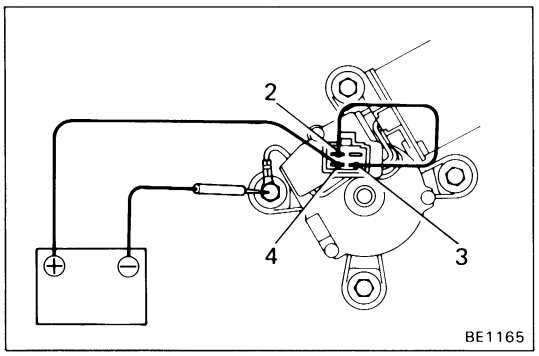

(c) Connect terminals 2 and 3.

(d) Connect the positive (+) lead from the battery to terminal 4.

(e) Check that the motor stops running at the stop position after the motor operates again.

If operation is not as specified, replace the motor.

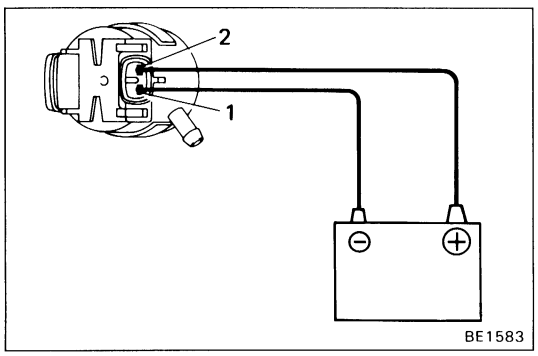

Front Washer Motor

INSPECT MOTOR

INSPECT WASHER MOTOR OPERATION

Connect the positive (+) lead from the battery to terminal 2 and negative (—) lead to terminal 1, check that the motor operates.

NOTICE: These tests must be performed quickly (Within 20 seconds) to prevent the coil from burning out.

If operation is not as specified, replace the motor.

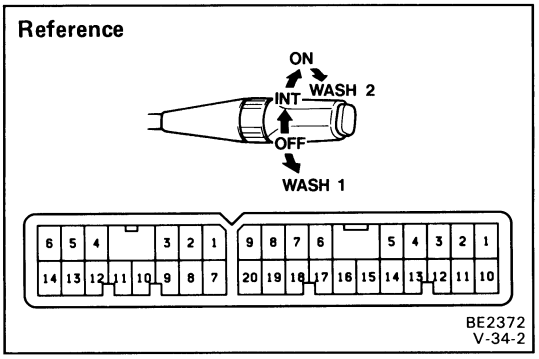

Rear Wiper and Washer Switch

INSPECT SWITCH

INSPECT SWITCH CONTINUITY

Inspect the switch continuity between terminals.

Terminal (Wire color) / Switch Position	1/20 (GR)	2/20 (V)	10/20 (O)	16/20 (B)
Washer I		○		○
OFF				
INT			○	○
ON	○			○
Washer II	○	○		○

If continuity is not as specified, replace the switch.

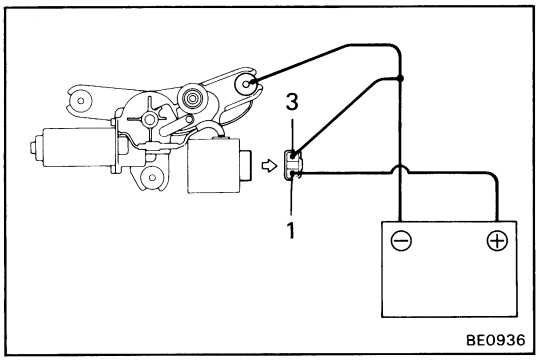

Rear Wiper Motor and Relay

INSPECT MOTOR AND RELAY

1. INSPECT RELAY AND MOTOR OPERATES

(a) Connect the positive (+) lead from the battery to terminal 1 and negative (−) leads to both terminal 3 and motor body.

(b) Check that the motor operates.

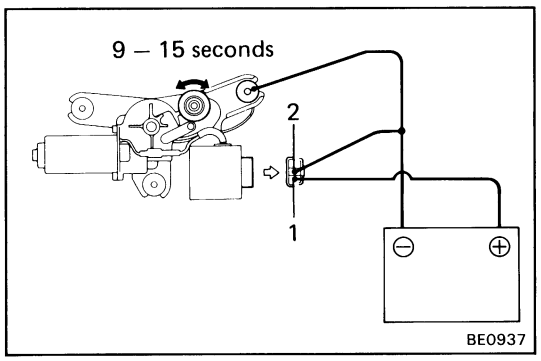

2. INSPECT INTERMITTENT OPERATION OF RELAY

(a) Connect the positive (+) lead from the battery to terminal 1 and negative (−) leads to both terminal 2 and motor body.

(b) Check that the motor does not operate intermittently for 9 — 15 seconds.

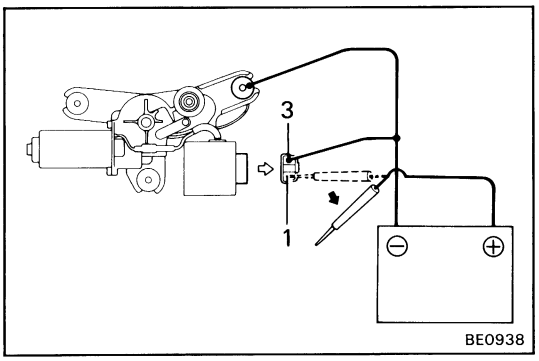

3. INSPECT MOTOR OPERATES, STOPPING AT STOP POSITION

(a) Start motor operation by connecting the positive (+) lead from the battery to terminal 1 and the negative (−) lead to both terminal 3 and motor body.

(b) Stop motor operation anywhere except stop position by disconnecting terminal 1.

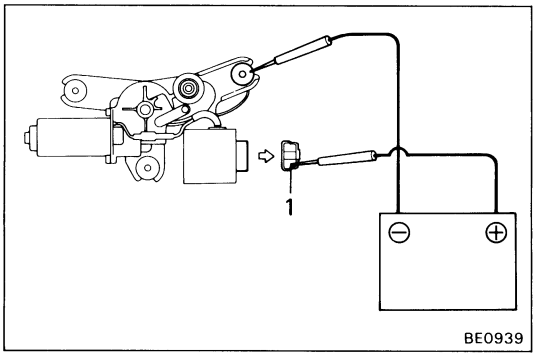

(c) Connect the positive (+) lead from the battery to terminal 1 and the negative (—) lead to the motor body.

(d) Check that the motor stops running at the stop position after the motor operates again.

If operation is not as specified, replace the motor.

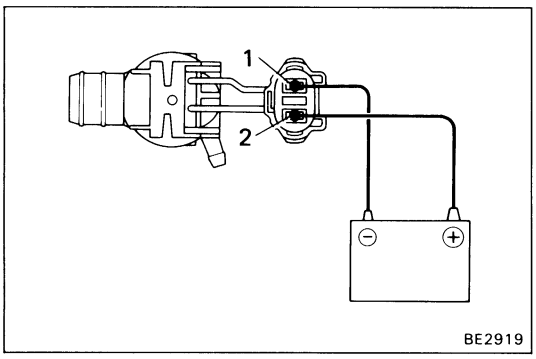

Rear Washer Motor

INSPECT MOTOR

INSPECT WASHER MOTOR OPERATION

Connect the positive (+) lead from the battery to terminal 2 and negative (—) lead to terminal 1, check that the motor operates.

NOTICE: These tests must be performed quickly (Within 20 seconds) to prevent the coil from burning out.

If operation is not as specified, replace the motor.

COMBINATION METER

Troubleshooting

Problem	Possible cause	Remedy	Page
Voltmeter does not operate	Fuses blown	Replace in-line fuses and check for short	
	Faulty	Check voltmeter	BE-40
	Wiring faulty	Repair as necessary	
Turbo meter does not operate	"GAUGE" fuse blown	Replace fuse and check for short	
	Turbo meter faulty	Check gauge	BE-45
	Pressure sensor faulty	Check sensor	BE-46
	Wiring faulty	Repair as necessary	
Tachometer does not operate	"GAUGE" fuse blown	Replace fuse and check for short	
	Tachometer faulty	Check tachometer	BE-39
	Wiring faulty	Repair as necessary	
Fuel gauge does not operate	"GAUGE" fuse blown	Replace fuse and check for short	
	Fuel gauge faulty	Check gauge	BE-40
	Sender gauge faulty	Check sender gauge	BE-40
	Wiring or ground faulty	Repair as necessary	
Fuel level warning light does not operate	"GAUGE" fuse blown	Replace fuse and check for short	
	Bulb burned out	Replace bulb	
	Fuel level warning switch faulty	Check switch	BE-41
	Wiring or ground faulty	Repair as necessary	
Water temperature gauge does not operate	"GAUGE" fuse blown	Replace fuse and check for short	
	Water temperature gauge faulty	Check gauge	BE-41
	Water temperature sender gauge faulty	Check sender gauge	BE-42
	Wiring or ground faulty	Repair as necessary	
Oil pressure receiver gauge does not operate	"GAUGE" fuse blown	Replace fuse and check for short	
	Oil pressure receiver gauge faulty	Check receiver gauge	BE-42
	Oil pressure sender gauge faulty	Check sender gauge	BE-43
	Wiring or ground faulty	Repair as necessary	
Brake warning light does not light	"GAUGE" fuse blown	Replace fuse and check for short	
	Bulb burned out	Replace bulb	
	Brake fluid level warning switch faulty	Check switch	BE-43
	Parking brake switch faulty	Check switch	BE-43
	Wiring or ground faulty	Repair as necessary	
Fasten belt warning does not operate	IGN fuse blown	Replace fuse and check for short	
	Bulb burned out	Replace bulb	
	Seat belt buckle switch faulty	Replace switch	BE-44
	No. 1 integration relay faulty	Replace relay	BE-44
	Wiring faulty	Repair as necessary	
Airbag warning light does not operate	"ECU-B" fuse blown	Replace fuse and check for short	
	Bulb burned out	Replace bulb	
	Wiring faulty	Repair as necessary	

Combination Meter and Gauge

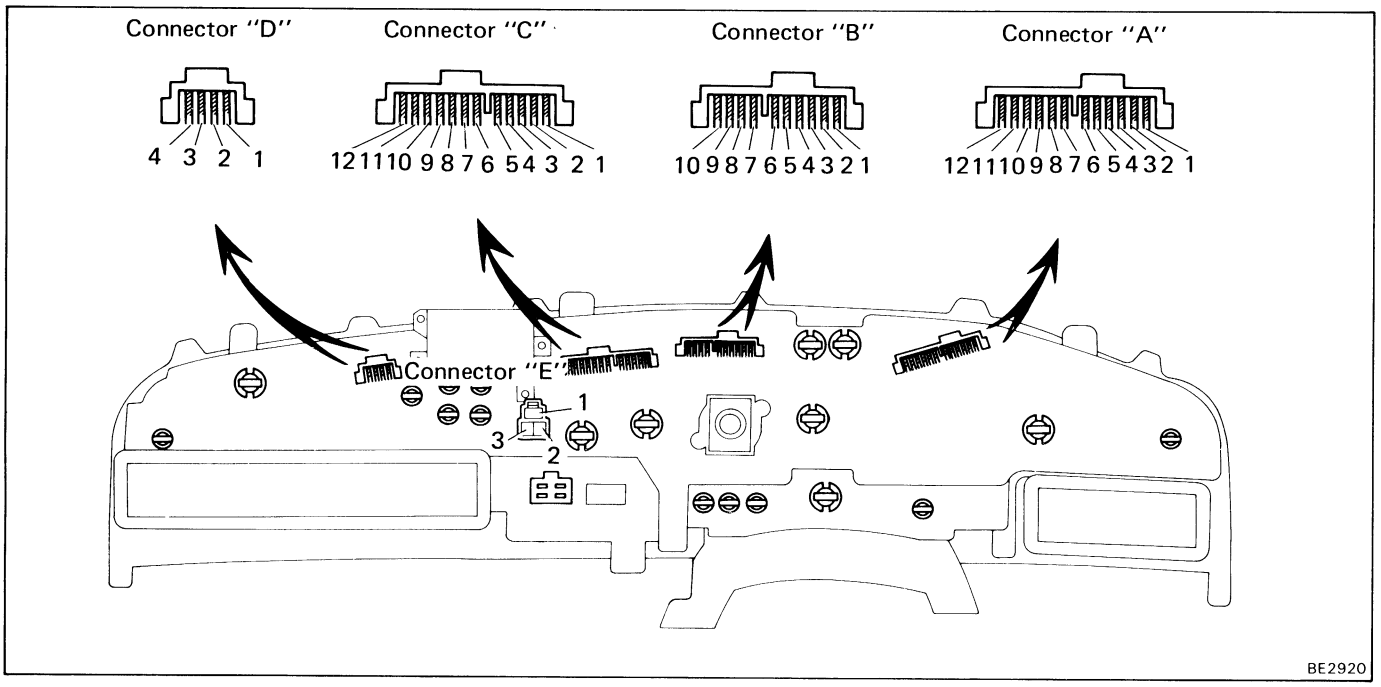

COMBINATION METER CIRCUIT

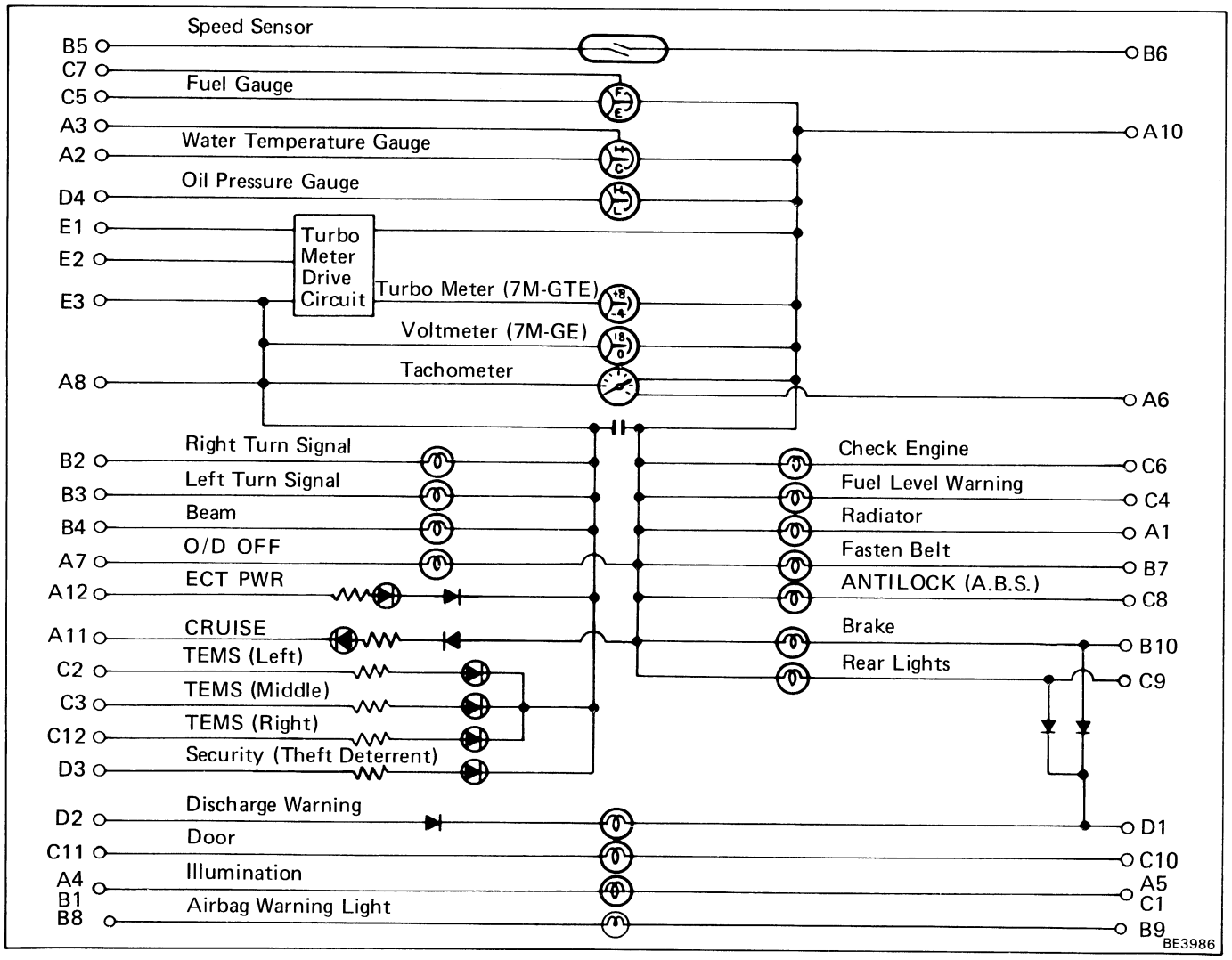

No.		Wiring connector side
A	1	Radiator Coolant Level Warning Switch
	2	Water Temperature Sender Gauge
	3	Ground
	4	TAIL Fuse
	5	Light Control Rheostat
	6	Igniter
	7	O/D Main Switch
	8	Ground
	9	—
	10	GAUGE Fuse
	11	Cruise Control Main Switch
	12	ECT Select Switch (PWR)
B	1	TAIL Fuse
	2	Turn Signal Switch (Right)
	3	Turn Signal Switch (Left)
	4	Headlight Dimmer Switch
	5	Ground
	6	TCCS ECU, ECT CPU, TEMS CPU and Cruise Control CPU
	7	Integration Relay
	8	Airbag Warning Light
	9	Airbag Warning Light
	10	Parking Brake Switch and Brake Fluid Level Warning Switch
C	1	Light Control Rheostat
	2	TEMS CPU
	3	TEMS CPU
	4	Fuel Sender Gauge (Level Warning Switch)
	5	Fuel Sender Gauge
	6	TCCS CPU
	7	Ground
	8	A.B.S. Actuator and A.B.S. CPU
	9	Taillight Failure Sensor
	10	Door Courtesy Switch
	11	DOME Fuse
	12	TEMS CPU
D	1	Alternator
	2	IGN Fuse
	3	Security (Theft Deterrent) CPU
	4	Oil Pressure Sender Gauge
E	1	Turbo Pressure Sensor
	2	5V
	3	Ground

Speedometer

ON-VEHICLE INSPECTION OF SPEEDOMETER

(a) Using a speedometer tester, inspect the speedometer allowable indication error and check the operation of the odometer.

HINT: Tire wear and tire over or under inflation will increase the indication error.

Standard indication (mph)	Allowable range (mph)
20	20 – 23
40	40 – 43.5
60	60 – 64
80	80 – 84.5
100	100 – 105

Standard indication (km/h)	Allowable range (km/h)
20	18 – 23
40	40 – 44
60	60 – 64.5
80	80 – 85
100	100 – 105
120	120 – 125.5
140	140 – 146
160	160 – 167

If error is excessive, replace the speedometer.

(b) Check the speedometer for pointer vibration and abnormal noises.

HINT: Pointer vibration can be caused by a loose speedometer cable.

Tachometer

ON-VEHICLE INSPECTION OF TACHOMETER

(a) Connect a tune-up test tachometer, and start the engine.

NOTICE:

- **Reversing the connection of the tachometer will damage the transistors and diodes inside.**
- **When removing or installing the tachometer, be careful not to drop or subject it to heavy shocks.**

(b) Compare the tester and tachometer indications.

DC 13.5V, 25°C	
Standard indication (rpm)	Allowable range (rpm)
700	610 – 750
3,000	2,800 – 3,200
5,000	4,800 – 5,200
7,000	6,700 – 7,300

If error is excessive, replace the tachometer.

Voltmeter

INSPECTION OF VOLTMETER

Compare the tester and voltmeter indications.

If error is excessive, replace the voltmeter.

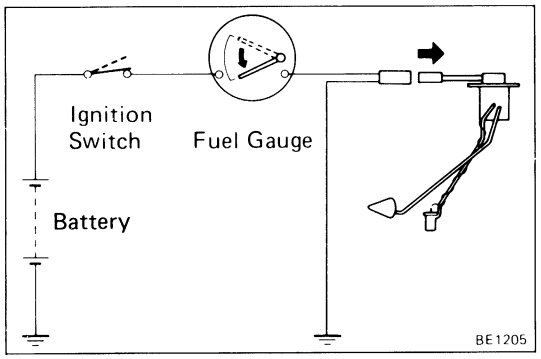

Fuel Gauge

INSPECTION OF GAUGE

1. INSPECT RECEIVER GAUGE OPERATION

(a) Disconnect the connector from the fuel sender gauge.

(b) Turn the ignition switch on. Check that the receiver gauge needle moves to the empty position.

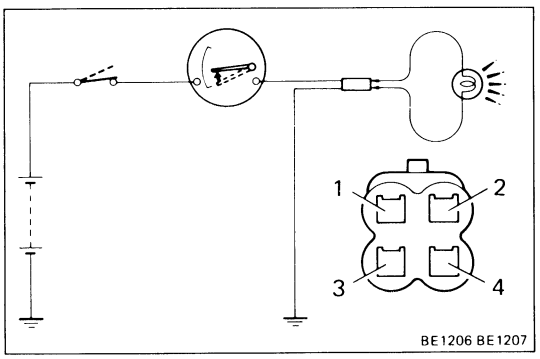

(c) Connect the terminals 3 and 4 on the wire harness side connector through a 3.4 W test bulb.

(d) Turn the ignition switch on. Check that the bulb lights and receiver gauge needle moves towards the full position.

HINT: Because of the silicon oil in the gauge, it will take a short time for the needle to stabilize.

If operations are not as specified, remove and test the receiver gauge.

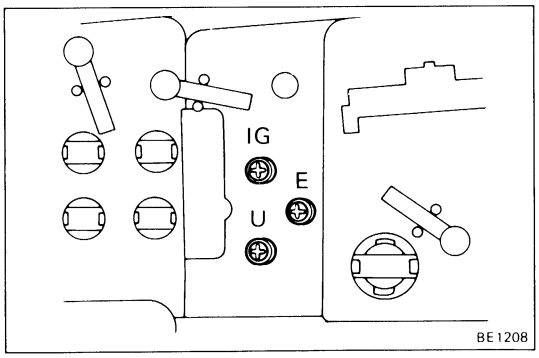

2. MEASURE RECEIVER GAUGE RESISTANCE

Measure the resistance between terminals.

Between terminals	Resistance (Ω)
IG – U	Approx. 102.7
IG – E	Approx. 167.2
U – E	Approx. 64.5

If each resistance value is not as specified, replace the receiver gauge.

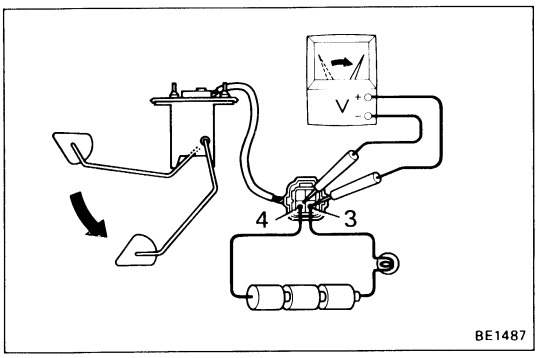

3. INSPECT SENDER GAUGE OPERATION

(a) Connect a series of three 1.5 V dry cell batterys.

(b) Connect the positive (+) lead from the dry cell batterys to terminal 3 through a 3.4 W test bulb and the negative (−) lead to terminal 4.

(c) Check that the voltage rises between terminals 3 and 4 as the float is moved from the top to bottom position.

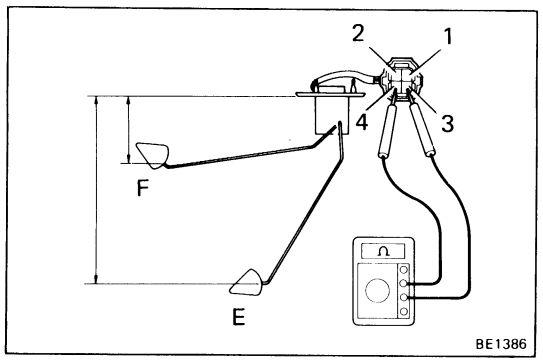

(d) Measure the resistance between terminals 3 and 4 for each float position.

	Float position mm (in.)	Resistance (Ω)
F	71.7 ± 3 (2.823 ± 0.12)	4.0 ± 1.0
E	237.2 ± 3 (9.339 ± 0.12)	110.0 ± 7.7

If each resistance value is not as specified, replace the sender gauge.

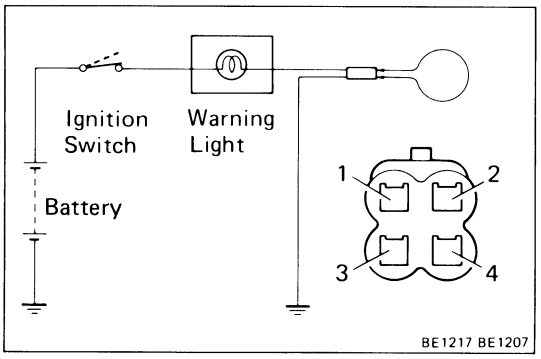

Fuel Level Warning

INSPECTION OF LEVEL WARNING

1. INSPECT WARNING LIGHT OPERATION

(a) Disconnect the connector from the fuel sender gauge. Connect the terminals 1 and 2 on the wire harness side connector.

(b) Turn the ignition switch on. Check that the bulb lights.

If the bulb does not light, remove and test the bulb.

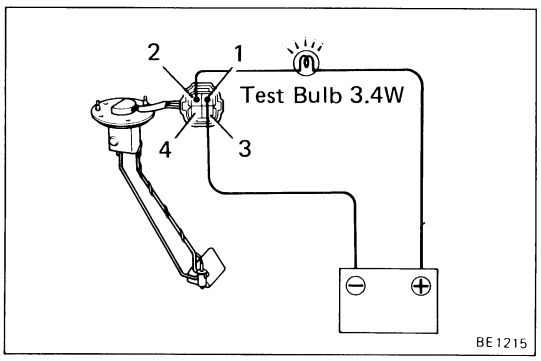

2. INSPECT WARNING SWITCH OPERATION

(a) Apply battery voltage between terminals 1 and 2 through a 3.4 W test bulb. Check that the bulb lights.

HINT: It will take a short time for the bulb to light.

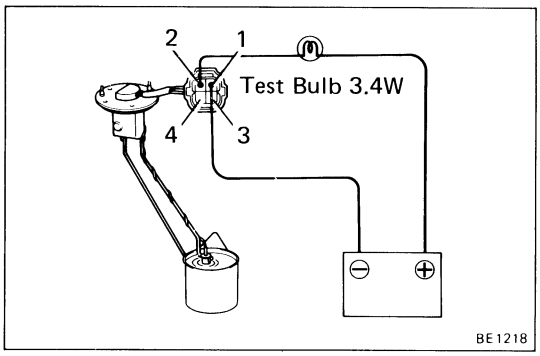

(b) Submerge the switch in gasoline. Check that the bulb goes out.

If operation is not as specified, replace the sender gauge.

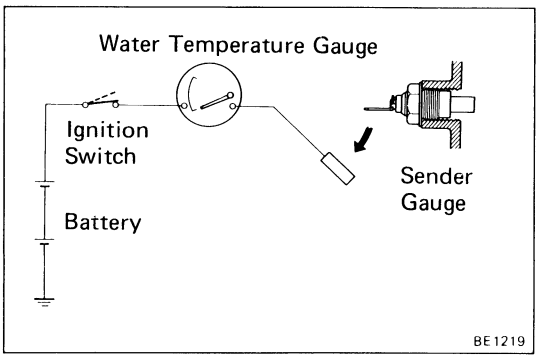

Water Temperature Gauge

INSPECTION OF GAUGE

1. INSPECT RECEIVER GAUGE OPERATION

(a) Disconnect the connector from the sender gauge.

(b) Turn the ignition switch on. Check that the receiver gauge needle moves to the cold position.

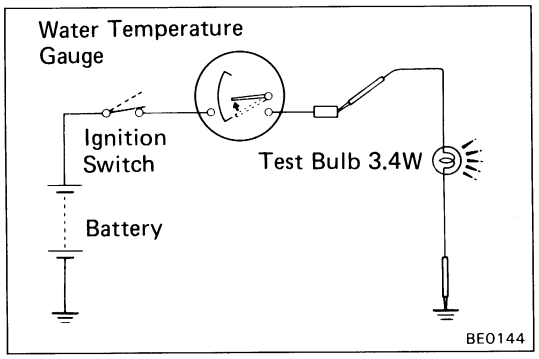

(c) Ground the terminal on the wire harness side connector through a 3.4 W test bulb.

(d) Turn the ignition switch on. Check that the bulb lights and receiver gauge needle moves to the hot side.

If operations are not as specified, remove and test the receiver gauge.

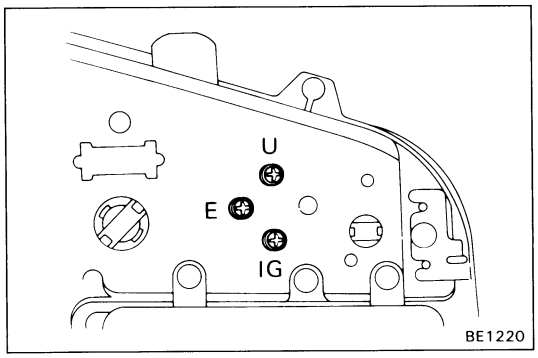

2. MEASURE RECEIVER GAUGE RESISTANCE

Measure the resistance between terminals.

Between terminals		Resistance (Ω)
Negative lead (−) from ohmmeter	Positive lead (+) from ohmmeter	
IG	U	Approx. 54.0
IG	E	Approx. 146.2
U	E	Approx. 200.2

If resistance value is not as specified, replace the sender gauge.

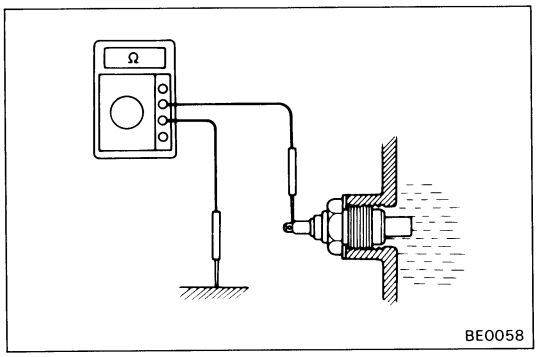

3. MEASURE SENDER GAUGE RESISTANCE

Measure the resistance between terminal and ground.

Water temperature °C (°F)	Resistance (Ω)	
	Yazaki	Nippondenso
50 (122)	–	$198.5^{+33.6}_{-36.6}$
60 (140)	152.7	–
115 (239)	$26.4^{+2.2}_{-2.6}$	–
120 (248)	–	$19.6^{+1.71}_{-2.21}$

If each resistance value is not as specified, replace the sender gauge.

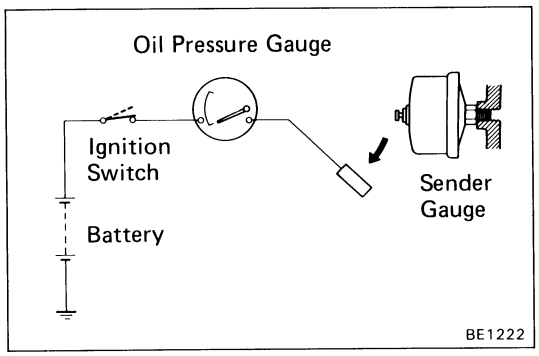

Oil pressure Gauge

INSPECTION OF GAUGE

1. INSPECT RECEIVER GAUGE OPERATION

(a) Disconnect the connector from the sender gauge.

(b) Turn the ignition switch on. Check that the receiver gauge needle moves to the low position.

(c) Ground the terminal on the wire harness side connector through a 3.4 W test bulb. Check that the receiver gauge needle moves to the high side.

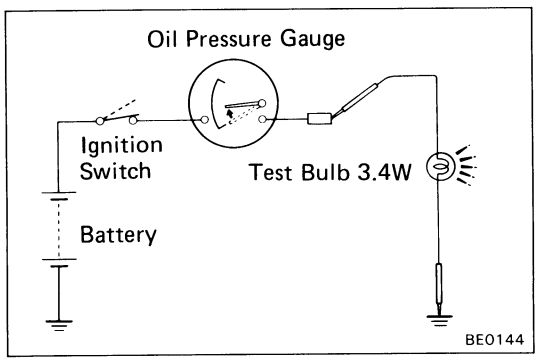

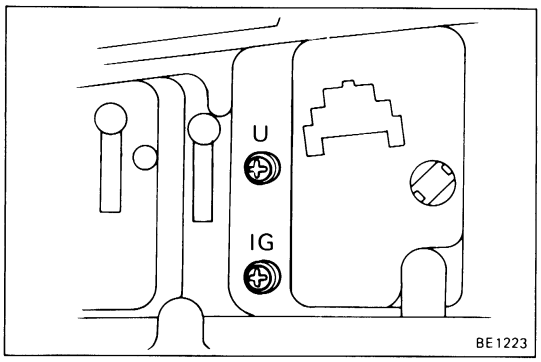

2. **MEASURE RECEIVER GAUGE RESISTANCE**

Measure the resistance between terminals.

Resistance: Approx. 42 Ω

If resistance value is not as specified, replace the receiver gauge.

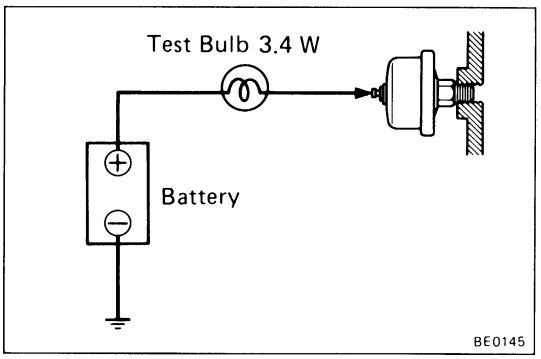

3. **INSPECT SENDER GAUGE OPERATION**

(a) Disconnect the connector from the sender gauge.

(b) Apply battery voltage to sender gauge terminal through a 3.4 W test bulb.

(c) Check that the bulb does not light when the engine is stopped.

(d) Check that the bulb flashes when the engine is running.
The number of flashes should vary with engine speed.

If operations are not as specified, replace the sender gauge.

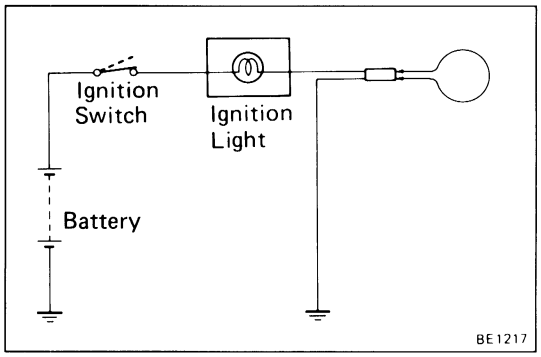

Brake Warning

INSPECTION OF BRAKE WARNING

1. **INSPECT WARNING LIGHT OPERATION**

(a) Disconnect the connectors from the level warning switch and parking brake switch.

(b) Connect the terminals on the wire harness side of the level warning switch connector.

(c) Disconnect the connector from the alternator and turn the ignition switch ON.
Check that the warning light lights.

If the warning light does not light, test the bulb.

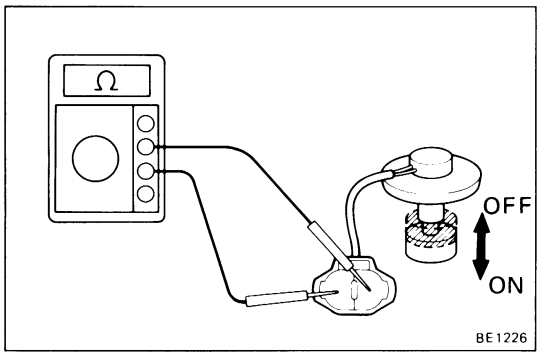

2. **INSPECT LEVEL WARNING SWITCH OPERATION**

(a) Check that there is no continuity between terminals with the switch OFF (float up).

(b) Check that there is continuity between terminals with the switch ON (float down).

If operations are not as specified, replace the switch.

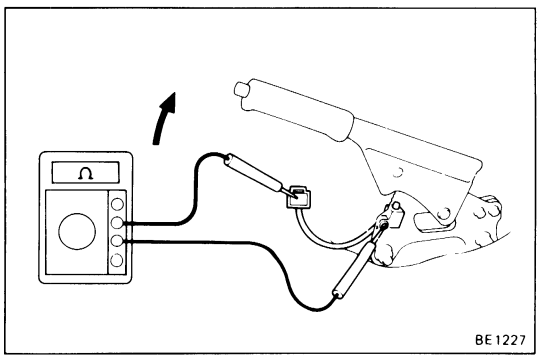

3. **INSPECT PARKING BRAKE SWITCH OPERATION**

(a) Check that there is continuity between the terminal and switch set screw with the parking brake lever pulled up.

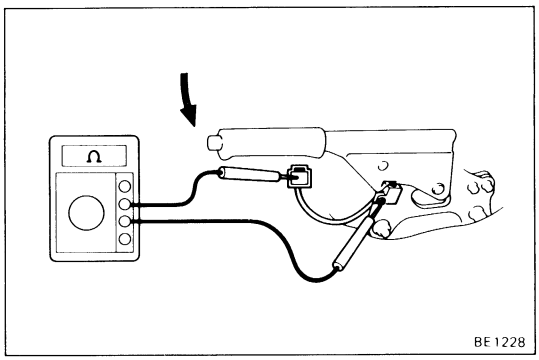

(b) Check that there is no continuity between the terminal and switch set screw with the parking brake lever returned.

If operation is not as specified, replace the switch.

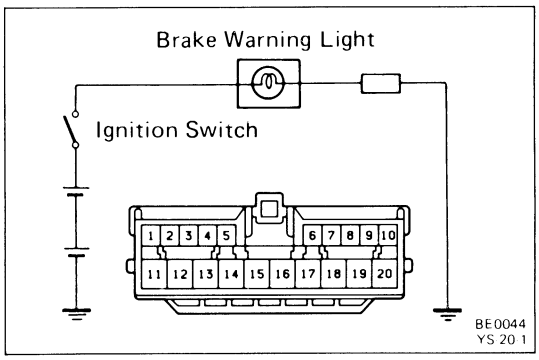

Fasten Belt Warning

INSPECTION OF BELT WARNING

1. INSPECT WARNING LIGHT OPERATION

(a) Disconnect the connector from the fuse and relay block No.1(1G). Ground the terminal 6 on the wire harness side connector.

(b) Turn the ignition switch on. Check that the bulb lights.

If the bulb does not light, remove and test the bulb.

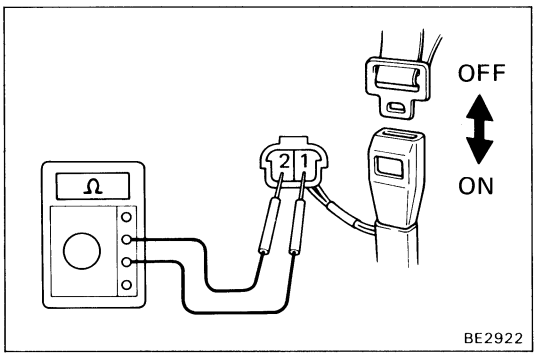

2. INSPECT BUCKLE SWITCH OPERATION

(a) Disconnect the connector from the switch.

(b) Check that there is no continuity between terminals of the switch with the belt unfastened.

(c) Check that there is continuity between terminals of the switch with the belt fastened.

If operation is not as specified, replace the switch.

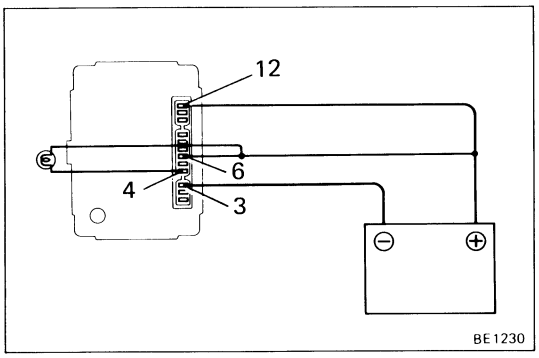

3. INSPECT INTEGRATION RELAY OPERATION

(a) Connect the positive lead (+) from the battery to terminals 6 and 12.

(b) Connect the positive lead (+) from the battery to terminal 4 through a 3.4W test bulb.

(c) Ground terminal 3, check that the bulb lights and the buzzer sounds for 4 — 8 seconds.

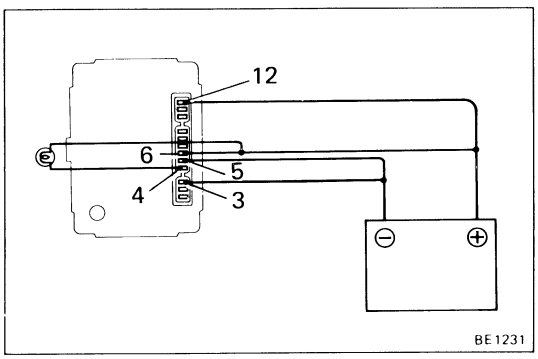

(d) Connect the positive lead (+) from the battery to terminals 6 and 12.

(e) Connect the positive lead (+) from the battery to terminal 4 through a 3.4W test bulb.

(f) Ground terminals 3 and 5, check that only the bulb lights for 4 — 8 seconds.

If operation is not as specified, replace the relay.

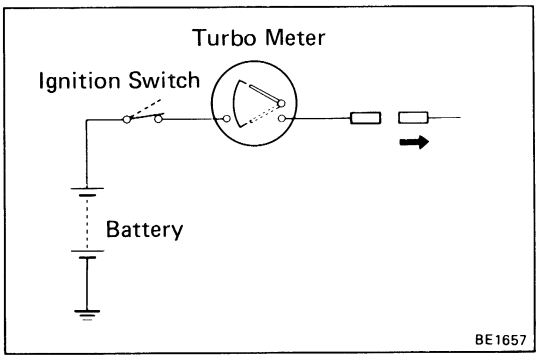

Turbo Meter

INSPECTION OF METER

1. INSPECT METER OPERATION

(a) Disconnect the connector from the pressure sensor.

(b) Turn the ignition switch ON. Check that the meter needle moves to upper position.

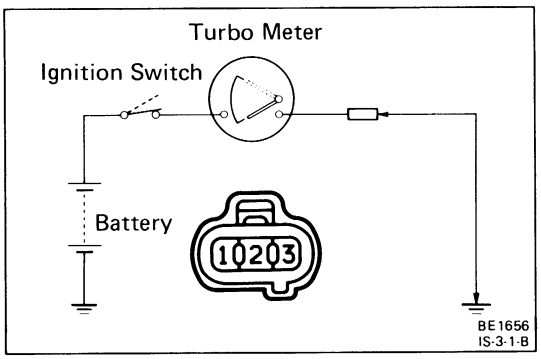

(c) Ground the terminal 2 on the wire harness side. Check that the meter needle moves to lower position.

If operations are not as specified, inspect the meter drive circuit.

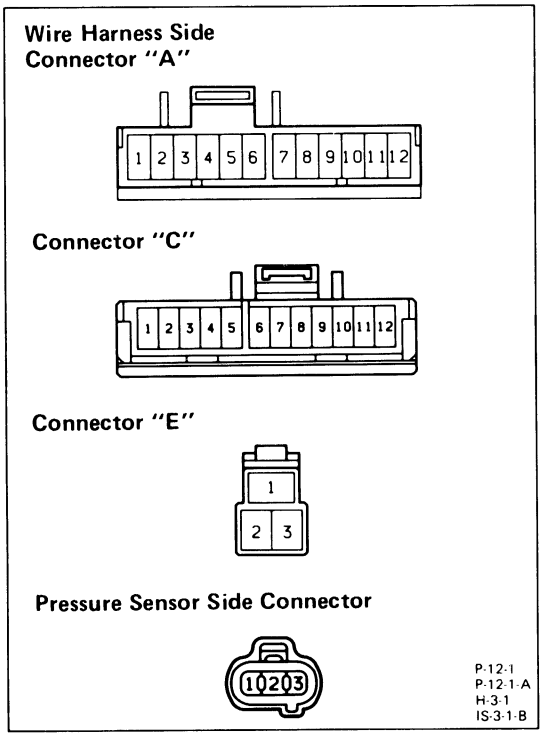

2. INSPECT METER DRIVE CIRCUIT

Disconnect the connectors from the combination meter and inspect the connector on the wire harness side as shown in the chart below.

Check For	Tester Connection	Condition	Specified Value
Continuity	On the connector "A" 8 – Ground	Always	Continuity
Voltage	On the connector "C" 8 – Ground	Turn ignition switch to LOCK or ACC	No voltage
		Turn ignition switch ON	Battery voltage
Continuity	On the connector "E" 1 – Ground 2 – Ground 3 – Ground	Disconnect the connector from the pressure sensor	No continuity
		Disconnect the connector from the pressure sensor and ground the three terminals on the wire harness side	Continuity

If circuit is as specified, measure the turbo meter resistance.

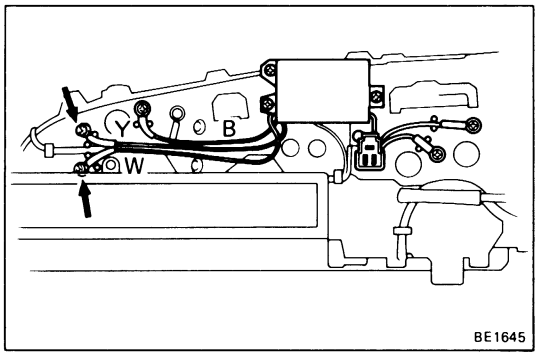

3. MEASURE TURBO METER RESISTANCE

(a) Disconnect the two drive circuit wire harnesses from the turbo meter terminals.

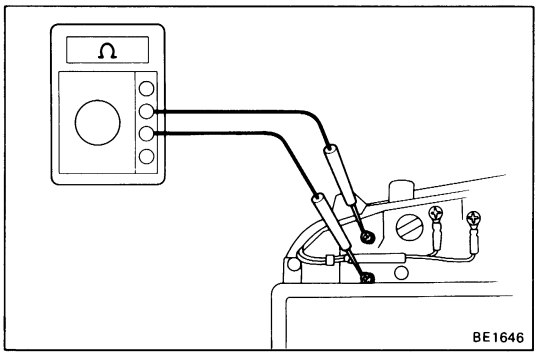

(b) Measure the resistance between terminals.

Resistance: Approx. 72 Ω

If resistance value is not as specified, replace the turbo meter.

If resistance value is not as specified, replace the turbo meter drive circuit.

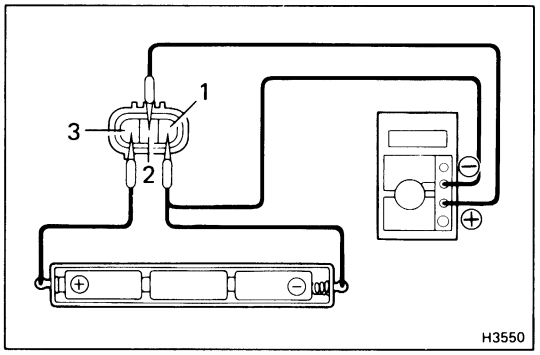

4. INSPECT PRESSURE SENSOR

(a) Connect a series of three 1.5 V dry cell batteries.

(b) Connect the positive (+) lead from the dry cell batteries to terminal 3 and the negative (−) lead to terminal 1.

(c) Connect the positive (+) lead from the voltmeter to terminal 2 and the negative (−) lead to terminal 1.

(d) Check that the voltage between terminals 2 and 1.

Voltage: Approx. 1.5 V

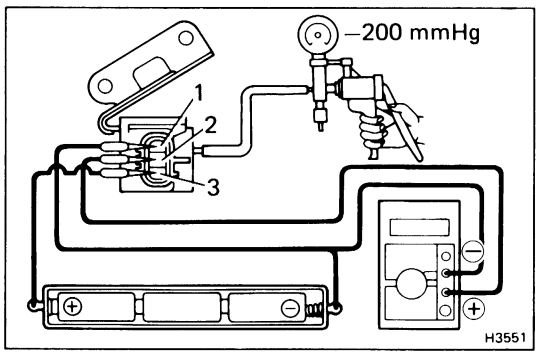

(e) Apply 200 mmHg (7.87 in.Hg. 26.7 kPa) of vacuum.

Check that the voltage drops below 1.5 V.

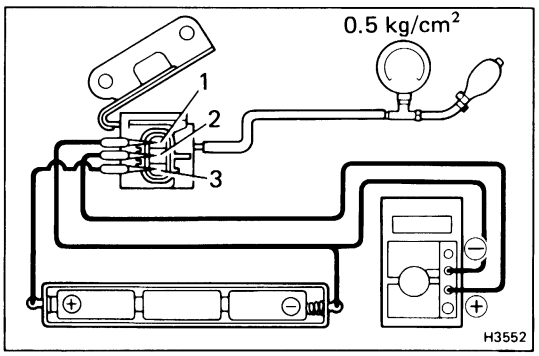

(f) Using SST, apply 0.5 kg/cm² (7.1 psi, 49 kPa) of pressure.

Check that the voltage rises above 1.5 V.

SST 09992-00241

If operations are not as specified, replace the sensor.

REAR WINDOW DEFOGGER

Troubleshooting

Problem	Possible cause	Remedy	Page
Rear window defogger does not work	Circuit breaker OFF	Reset breaker and check for short	BE-4
	GAUGE fuse blown	Replace fuse and check for short	BE-4
	Defogger switch faulty	Check switch	BE-47
	Defogger relay faulty	Check relay	BE-47
	Defogger wire broken	Check wires	BE-48
	Wiring and ground faulty	Repair as necessary	

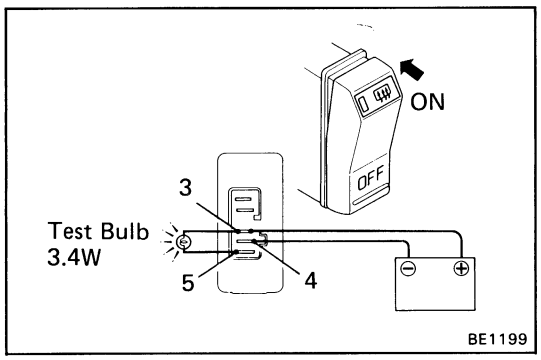

Rear Window Defogger Switch

INSPECTION OF DEFOGGER SWITCH

INSPECT SWITCH OPERATION

(a) Connect the positive (+) lead from the battery to terminal 3 and the negative (—) lead to terminal 4. Connect terminals 3 and 5 through a 3.4W test bulb.

(b) Push the defogger switch on. Check that the bulb lights for 12 to 18 minutes, then the bulb goes out.

If operation is not as specified, replace the switch.

Rear Window Defogger Relay

(See Taillight Control Relay on page BE-22)

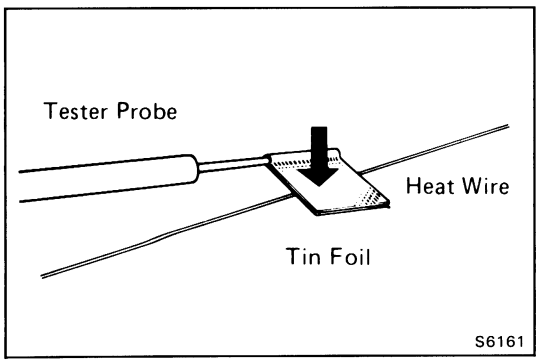

Rear Window Defogger Wires

NOTICE:

- **When cleaning the glass, use a soft, dry cloth, and wipe the glass in the direction of the wire. Take care not to damage the wires.**
- **Do not use detergents or glass cleaners with abrasive ingredients.**
- **When measuring voltage, wind a piece of tin foil around the tip of the negative probe and press the foil against the wire with your finger as shown.**

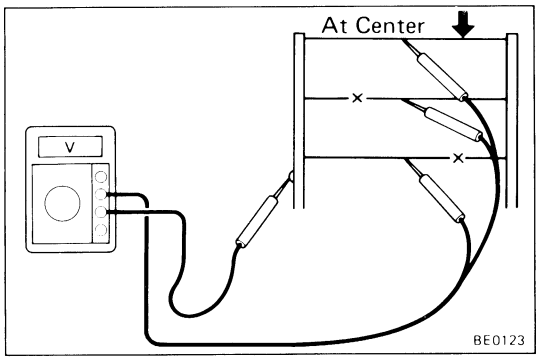

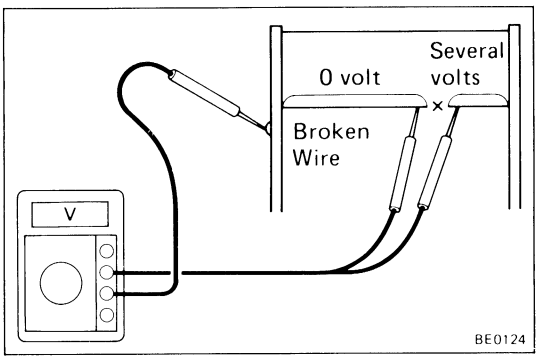

INSPECTION OF REAR WINDOW DEFOGGER WIRES

1. INSPECT FOR WIRE BREAKAGE

(a) Turn the ignition switch to ON.

(b) Turn the defogger switch to ON.

(c) Inspect the voltage at the center of each heat wire as shown.

Voltage	Criteria
Approx. 5V	Okay (No break in wire)
Approx. 10V or 0V	Broken wire

HINT: If there are 10 V, the wire is broken between the center of the wire and positive (+) end. If there is no voltage, the wire is broken between the center of the wire and ground.

2. INSPECT FOR WIRE BREAKAGE POINT

(a) Place the voltmeter positive (+) lead against the defogger positive (+) terminal.

(b) Place the voltmeter negative (—) lead with the foil strip against the heat wire at the positive (+) terminal end and slide it toward the negative (—) terminal end.

(c) The point where the voltmeter deflects from zero to several volts is the place where the heat wire is broken.

HINT: If the heat wire is not broken, the voltmeter will indicate 0 V at the positive (+) end of the heat wire but gradually increase to about 12 V as the meter probe is moved to the other end.

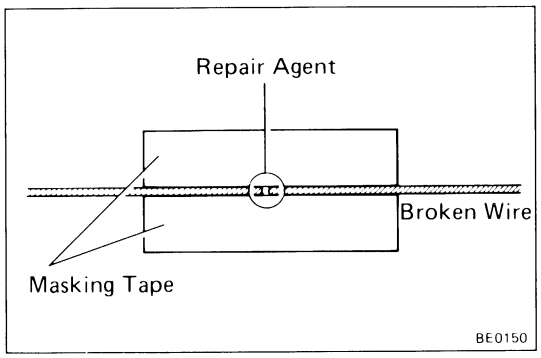

REPAIR OF REAR WINDOW DEFOGGER WIRES

1. CLEAN BROKEN WIRE TIPS WITH CLEANER

2. PLACE MASKING TAPE ALONG BOTH SIDES OF WIRE TO BE REPAIRED

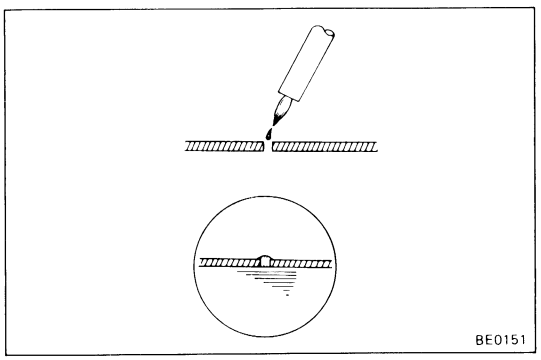

3. REPAIR DEFOGGER WIRES

(a) Thoroughly mix the repair agent (Dupont paste No. 4817).

(b) Using a fine tip brush, apply a small amount to the wire.

(c) After a few minutes, remove the masking tape.

(d) Allow to stand at least 24 hours.

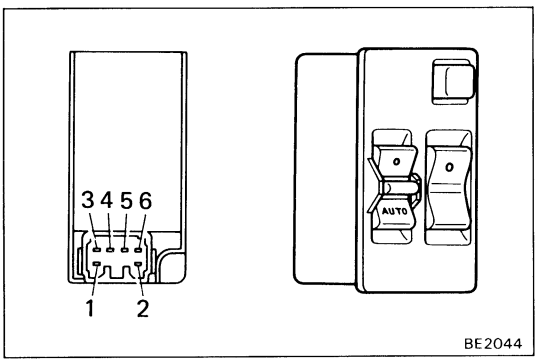

POWER WINDOW

Power Window Master Switch

INSPECTION OF SWITCH

INSPECT SWITCH CONTINUITY

Inspect the switch continuity between terminals.

Operation window		Driver's side				Passenger's side			
Switch Position \ Terminal		1	2	6	5	1	3	4	5
Window Unlock	UP	○—○		○—○		○—○		○—○	
	OFF		○—○		○—○		○—○		○—○
	DOWN	○—○		○—○		○—○		○—○	
			○—○		○—○		○—○		○—○
Window Lock	UP	○—○		○—○		○—○			
	OFF		○—○		○—○		○—○		
	DOWN	○—○		○—○		○—○		○—○	
			○—○		○—○				

If continuity is not as specified, replace the switch.

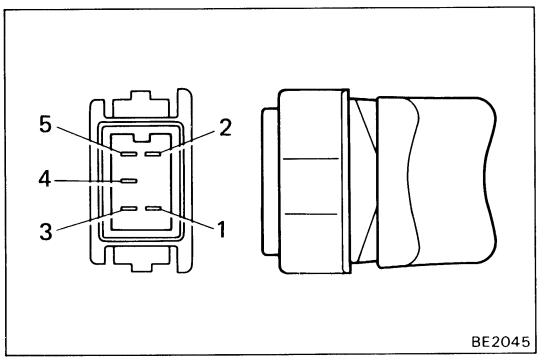

Power Window Door Switch

INSPECTION OF SWITCH

INSPECT SWITCH CONTINUITY

Inspect the switch continuity between terminals.

Switch Position \ Terminal	5	1	2	3	4
UP	○—○			○—○	
OFF		○—○		○—○	
DOWN	○—○				○—○
		○—○			

If continuity is not as specified, replace the switch.

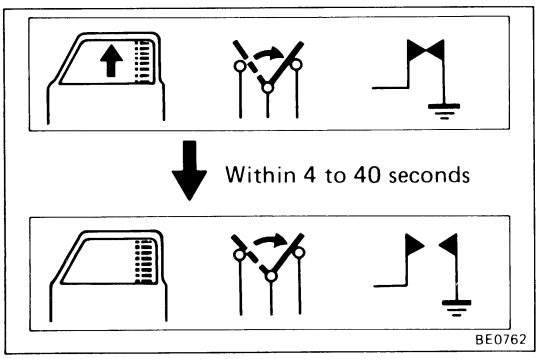

Power Window Motor

INSPECTION OF MOTOR

1. **INSPECT CIRCUIT BREAKER OPERATION**

   (a) With the window in the full closed position, hold the power window switch in "UP" position and check that there is a circuit breaker operation noise with 4 to 40 seconds.

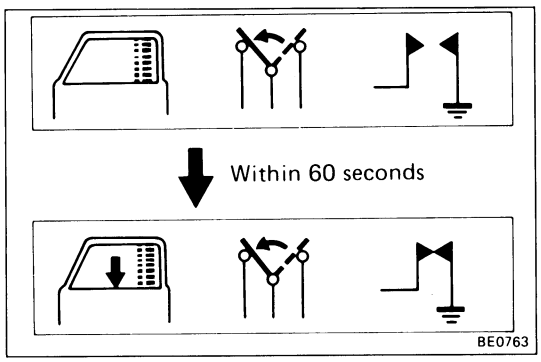

(b) With the window in the full closed position, hold the switch in "DOWN" and check that the window begins to descend within 60 seconds.

If operation is not as specified, replace the motor.

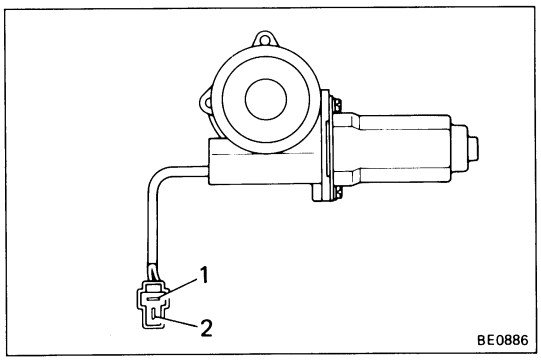

2. INSPECT MOTOR OPERATION

(a) Connect the positive (+) lead from the battery to terminal 1 and negative (—) lead to terminal 2, and check that the motor turns.

(b) Connect the positive (+) lead from the battery to terminal 2 and negative (—) lead to terminal 1, and check that the motor turns the opposite way.

If operation is not as specified, replace the motor.

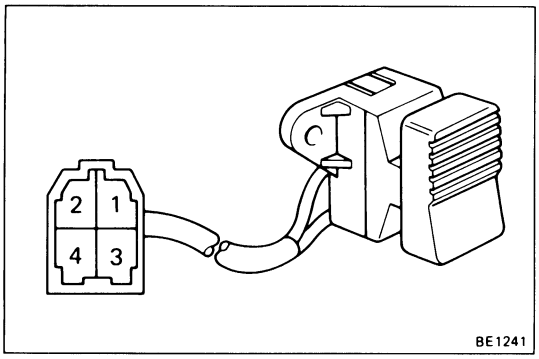

DOOR LOCK CONTROL SYSTEM

Door Lock Control Switch

INSPECTION OF SWITCH

INSPECT LEFT AND RIGHT SWITCH CONTINUITY

Inspect the switch continuity between terminals.

Terminal / Switch Position	4	1	3
LOCK		○	○
OFF			
UNLOCK	○	○	

If continuity is not as specified, replace the switch.

Unlock Warning Switch

(See page BE-15)

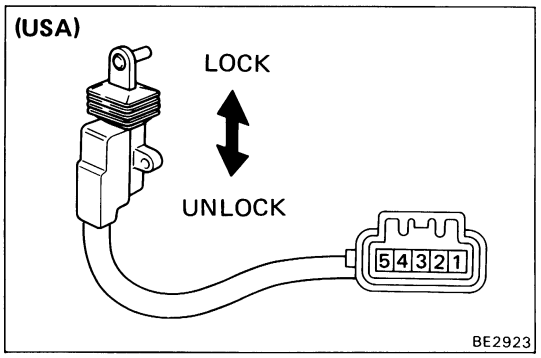

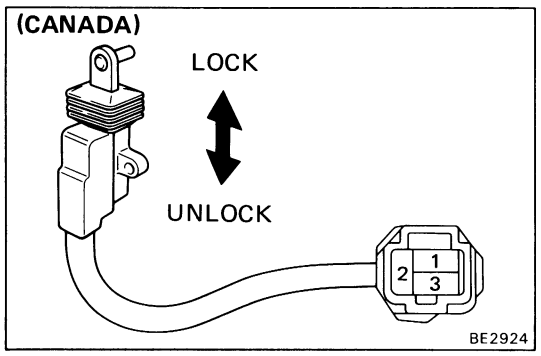

Door Lock Key Switch

INSPECTION OF SWITCH

INSPECT SWITCH CONTINUITY

Inspect the switch continuity between terminals.

(USA)

Terminal / Switch Position	5	3	4
LOCK	○	○	
UNLOCK		○	○

(CANADA)

Terminal / Switch Position	1	2	3
LOCK	○	○	
UNLOCK		○	○

If continuity is not as specified, replace the switch.

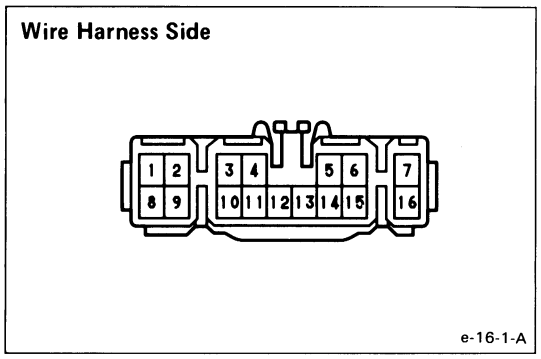

Door Lock Control Relay

INSPECTION OF RELAY

INSPECT DOOR LOCK CONTROL RELAY

(a) Disconnect the relay connector and inspect the connector on the wire harness side as shown in the chart.

Check For	Tester Connection	Condition	Specified Value
Continuity	2 – Body ground	LH door opened	Continuity
		LH door closed	No continuity
Voltage	8 – Body ground	—	Battery voltage
Continuity	10 – Body ground	Turn the following switches, one by one to lock • Control switch • LH door key switch • RH door key switch	Continuity
		Turn the following switches, one by one to except lock • Control switch • LH door key switch • RH door key switch	No continuity
	14 – Body ground	RH door opened	Continuity
		RH door closed	No continuity
	6 – Body ground	LH door lock switch to unlock	Continuity
		LH door lock switch to lock	No continuity
	16 – Body ground	—	Continuity
	5 – Body ground	RH door lock switch to unlock	Continuity
		RH door lock switch to lock	No continuity
	7 – Body ground	Set the ignition key switch	Continuity
		Remove the ignition key switch	No continuity
	11 – Body ground	Turn the following switches, one by one to unlock • Control switch • LH door key switch • RH door key switch	Continuity
		Turn the following switches, one by one to except unlock • Control switch • LH door key switch • RH door key switch	No continuity

(b) Connect the positive (+) lead from the battery to terminal 4 and the negative (—) lead to terminal 3. Check that the solenoids operate lock direction. Then, reverse the polarity, check that the solenoids operate unlock direction. If any of the solenoids does not operate, remove and test the solenoid.

If circuit operation is correct, replace the relay.

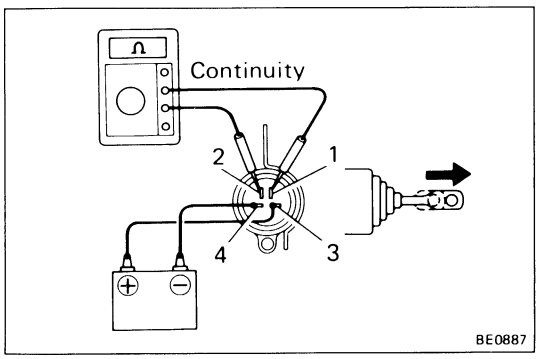

Door Lock Solenoid

INSPECTION OF DOOR LOCK SOLENOID

INSPECT SOLENOID OPERATION

(a) Connect the positive (+) lead from the battery to terminal 3 and the negative (—) lead to terminal 4. Check that the solenoid operates in the unlock direction.

(b) Check that there is continuity between terminals 1 and 2.

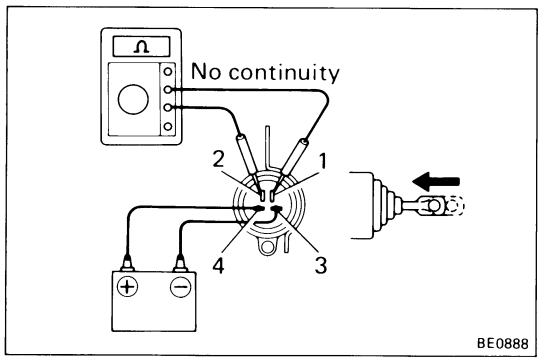

(c) Connect the positive (+) lead from the battery to terminal 4 and the negative (−) lead to terminal 3. Check that the solenoid operates in the lock direction.

(d) Check that there is no continuity between terminals 1 and 2.

If operation is not as specified, replace the solenoid.

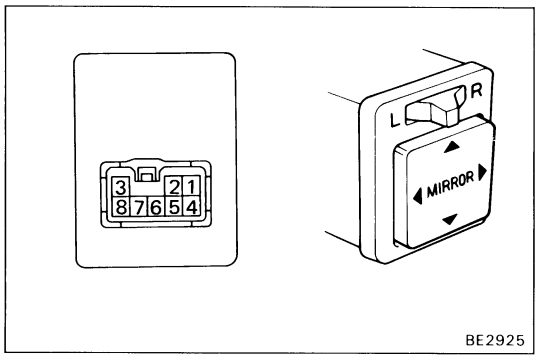

REMOTE CONTROL MIRROR

Mirror Switch

INSPECTION OF SWITCH

INSPECT SWITCH CONTINUITY

Inspect the switch continuity between terminals.

Left/Right Changing switch position	LEFT					OFF			RIGHT				
Terminal / Control switch position	1	2	3	7	8	1	2	3	1	2	3	5	6
OFF													
UP	○	○	○	○			○	○	○	○	○	○	
DOWN	○	○	○	○		○	○		○	○	○	○	
LEFT	○	○	○		○		○	○	○	○	○		○
RIGHT	○	○	○		○	○	○		○	○	○		○

If continuity is not as specified, replace the switch.

Remote Control Mirror

INSPECTION OF MIRROR

INSPECT MIRROR OPERATION

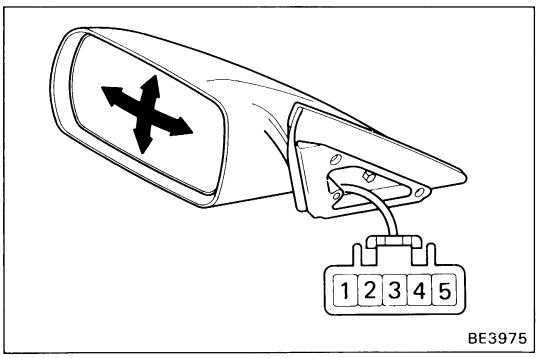

(a) Apply battery voltage to terminals 2 and 3, check that the mirror operates.
Then, reverse the polarity, and check that mirror operation is reversed.

(b) Apply battery voltage to terminals 3 and 4, check that the mirror operates.
Then, reverse the polarity, and check that the mirror operation is reversed.

It there is no mirror operation, replace the mirror.

MIRROR HEATER

Rear Window Defogger and Mirror Heater Switch

INSPECTION OF SWITCH

(See page BE-47)

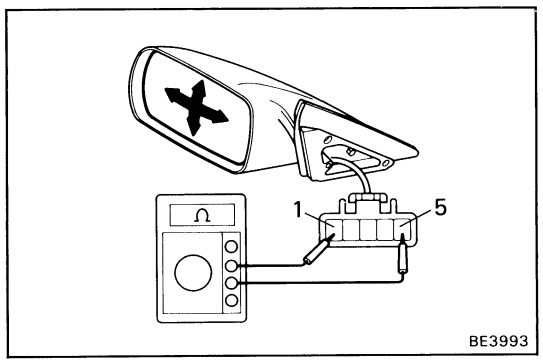

Mirror Heater

INSPECTION OF MIRROR HEATER

MEASURE HEATER RESISTANCE

Measure the resistance between terminals 1 and 5.

Resistance: 7.6 — 10.2 Ω at 20 °C (68°F)

If resistance value is not specified, replace the mirror.

HINT: The resistance value increases as the temperature rises.

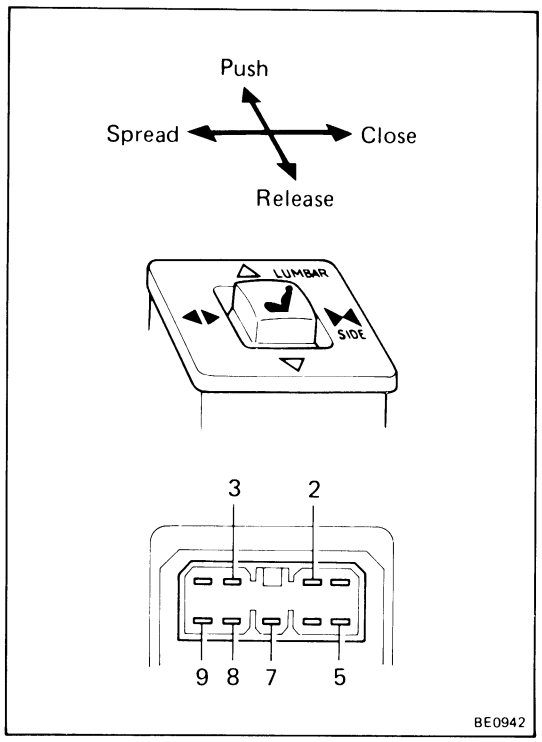

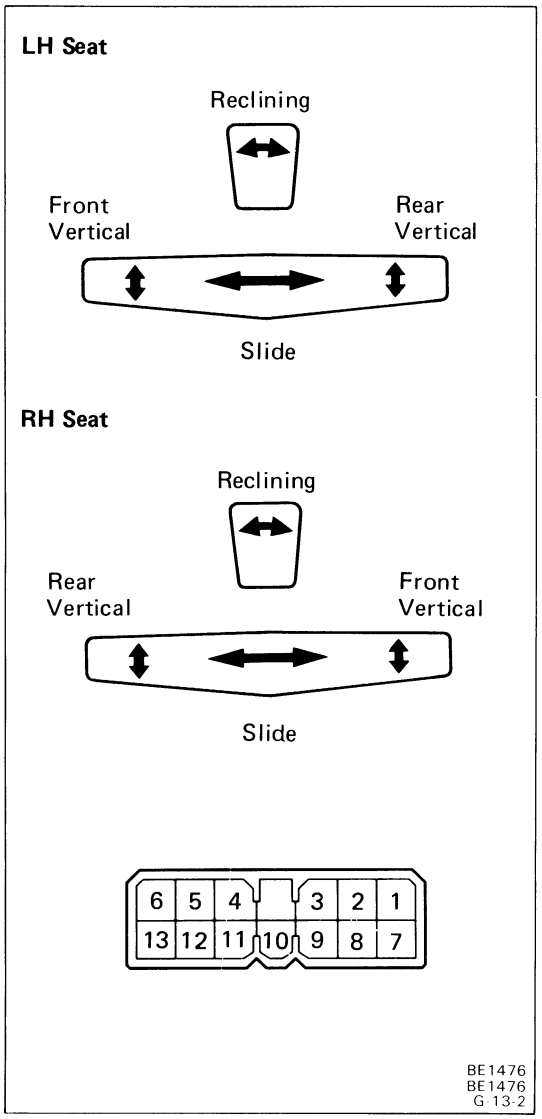

POWER SEAT

Power Seat Switch (Lumbar and Side Support)

INSPECTION OF SWITCH

INSPECT SWITCH CONTINUITY

Inspect the switch continuity between terminals.

Switch Position \ Terminal		3	5	7	8	2	9
LUMBAR	Push	○	○	○	○		
	Off	○	○		○		
	Release	○	○	○	○		
SIDE	Spread			○	○	○	○
	Off				○	○	○
	Close			○	○	○	○

If continuity is not as specified, replace the switch.

Power Seat Switch (Slide, Vertical and Reclining)

INSPECTION OF SWITCH

INSPECT SWITCH CONTINUITY

Inspect the switch continuity between terminals.

Switch Position \ Terminal		LH	5	9	12	4	13	6	2	10	11	3
		RH	2	11	8	3	7	1	5	10	9	4
Slide	FRONT		○	○							○	○
	OFF		○	○								○
	REAR		○	○							○	○
Front Vertical	UP				○	○					○	○
	OFF				○	○						○
	DOWN				○	○					○	○
Rear Vertical	UP						○	○			○	○
	OFF						○	○				○
	DOWN						○	○			○	○
Reclining	FRONT								○	○	○	○
	OFF								○	○		○
	REAR								○	○	○	○

If continuity is not as specified, replace the switch.

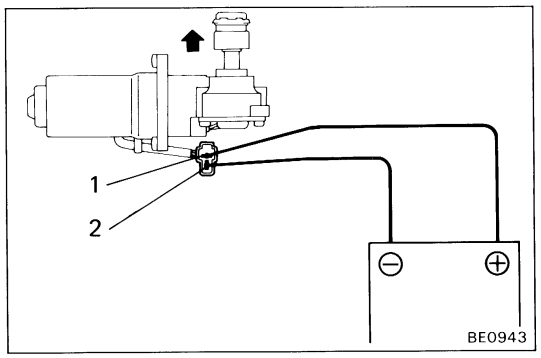

Power Seat Motor (Lumbar and Side Support)

INSPECTION OF MOTOR

INSPECT MOTOR OPERATION

(a) Connect the positive (+) lead from the battery to terminal 1 and the negative (—) lead to terminal 2. Check that the motor operates in the push direction.

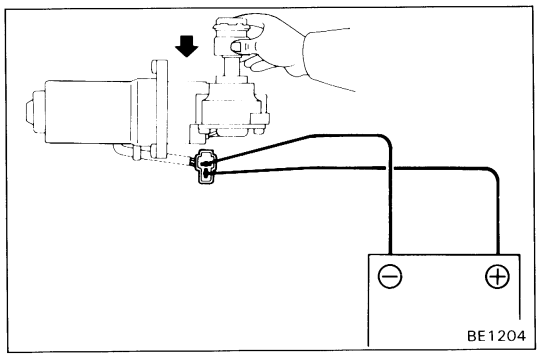

(b) Connect the positive (+) lead from the battery to terminal 2 and the negative (—) lead to terminal 1. Check that the motor operates in the release direction.

If operation is not as specified, replace the motor.

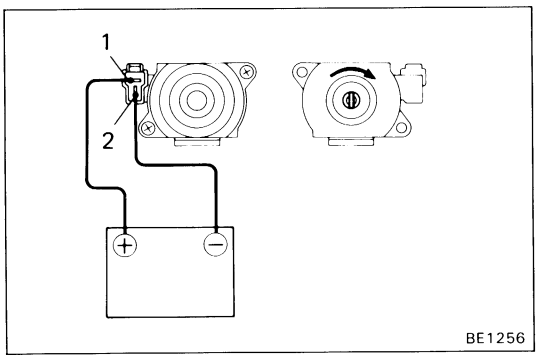

Power Seat Motor (Slide and Vertical)

INSPECTION OF MOTOR

INSPECT MOTOR OPERATION

(a) Connect the positive (+) lead from the battery to terminal 1 and the negative (—) lead to terminal 2. Check that the motor turns clockwise.

(b) Connect the positive (+) lead from the battery to terminal 2 and the negative (—) lead to terminal 1. Check that the motor turns counterclockwise.

If operation is not as specified, replace the motor.

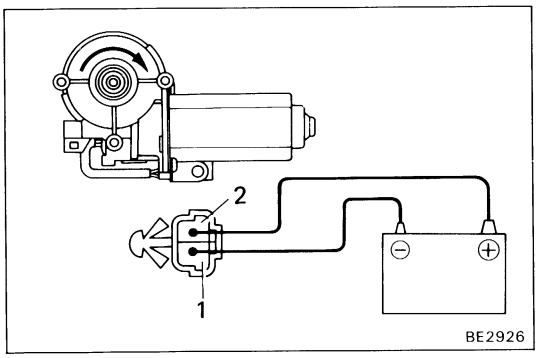

Power Seat Motor (Reclining)

INSPECTION OF MOTOR

INSPECT MOTOR OPERATION

(a) Connect the positive (+) lead from the battery to terminal 2 and the negative (—) lead to terminal 1. Check that the motor turns clockwise.

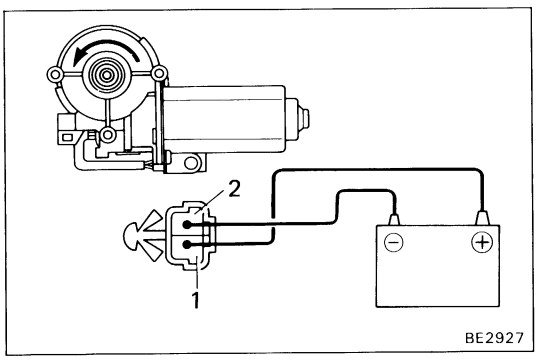

(b) Connect the positive (+) lead from the battery to terminal 1 and the negative (—) lead to terminal 2. Check that the motor turns counterclockwise.

If operation is not as specified, replace the motor.

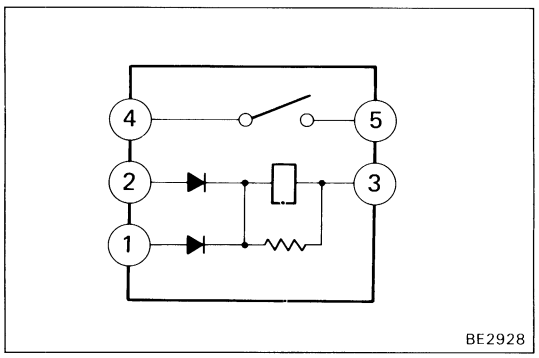

Power Seat Relay (Reclining)

INSPECTION OF RELAY

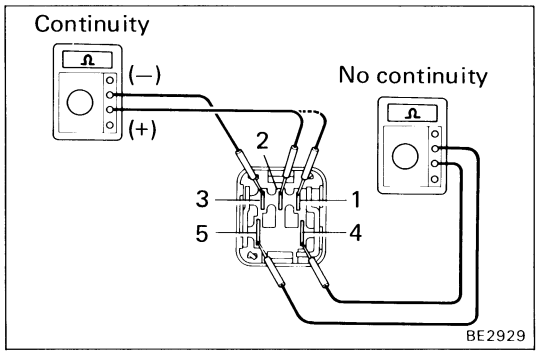

1. **INSPECT RELAY CONTINUITY**
   (a) Connect the positive (+) lead from ohmmeter to terminal 1 or 2 and the negative (−) lead to terminal 3. Check that there is continuity between terminals.
   (b) Connect the tester leads in reverse and check that there is no continuity between terminals.
   (c) Check that there is no continuity between terminals 4 and 5.

   If continuity is not as specified, replace the relay.

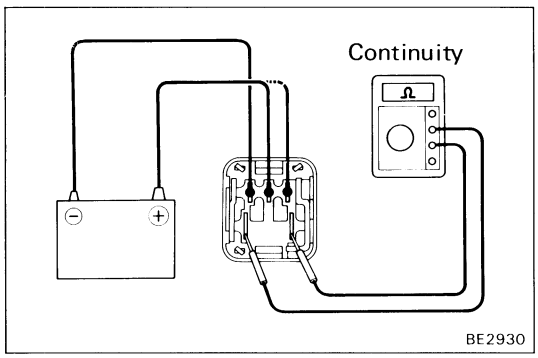

2. **INSPECT RELAY OPERATION**
   (a) Connect the positive (+) lead from battery to terminal 1 or 2 and the negative (−) lead to terminal 3.
   (b) Check that there is continuity between terminals 4 and 5.

   If operation is not as specified, replace the relay.

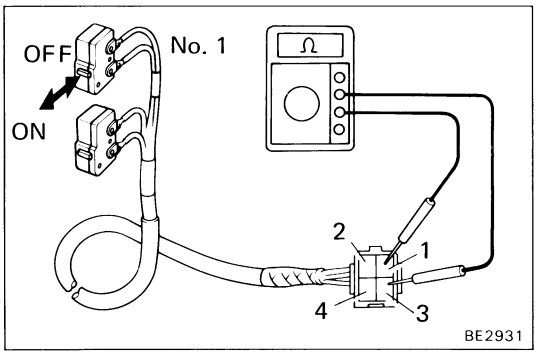

Power Seat Limit Switch (Reclining)

INSPECTION OF LIMIT SWITCH

1. **INSPECT NO.1 SWITCH CONTINUITY**
   (a) Check that there is continuity between terminals 1 and 3 when the No.1 switch is ON (free).
   (b) Check that there is no continuity between terminals 1 and 3 when the No.1 switch is OFF (pushed).

   If continuity is not as specified, replace the switch.

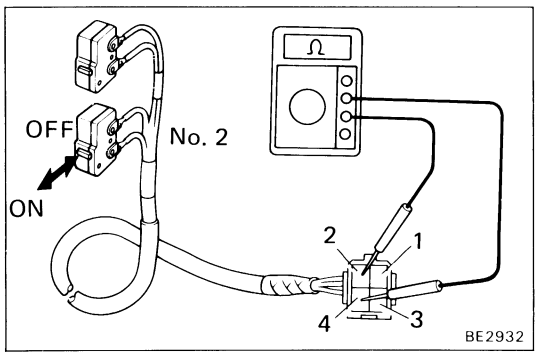

2. **INSPECT NO.2 SWITCH CONTINUITY**
   (a) Check that there is continuity between terminals 2 and 4 when the No.2 switch is ON (free).
   (b) Check that there is no continuity between terminals 2 and 4 when the No.2 switch is OFF (pushed).

   If continuity is not as specified, replace the switch.

CRUISE CONTROL SYSTEM
Wiring Diagram (U.S.A)

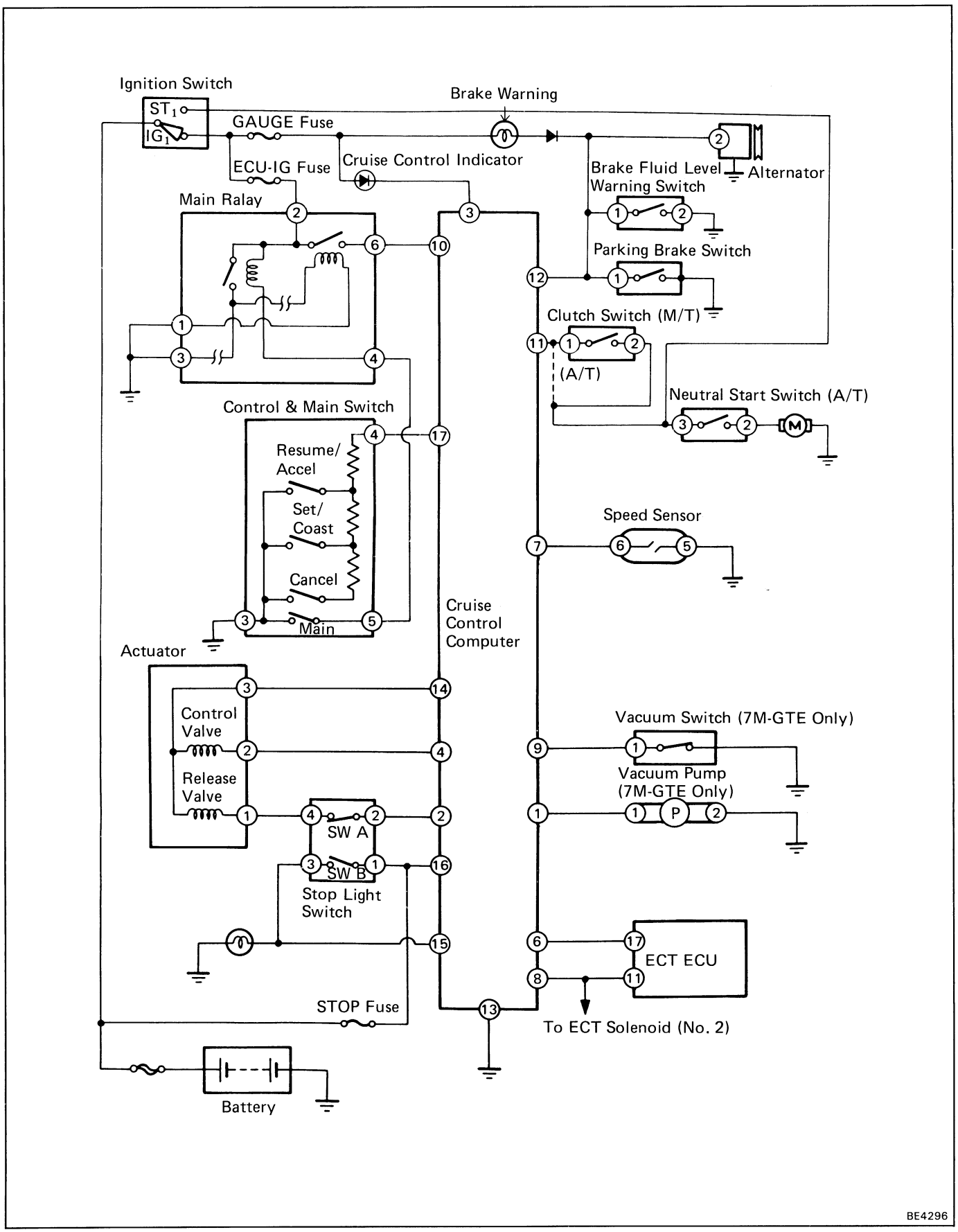

CRUISE CONTROL SYSTEM (Cont'd)

Wiring Diagram (CANADA)

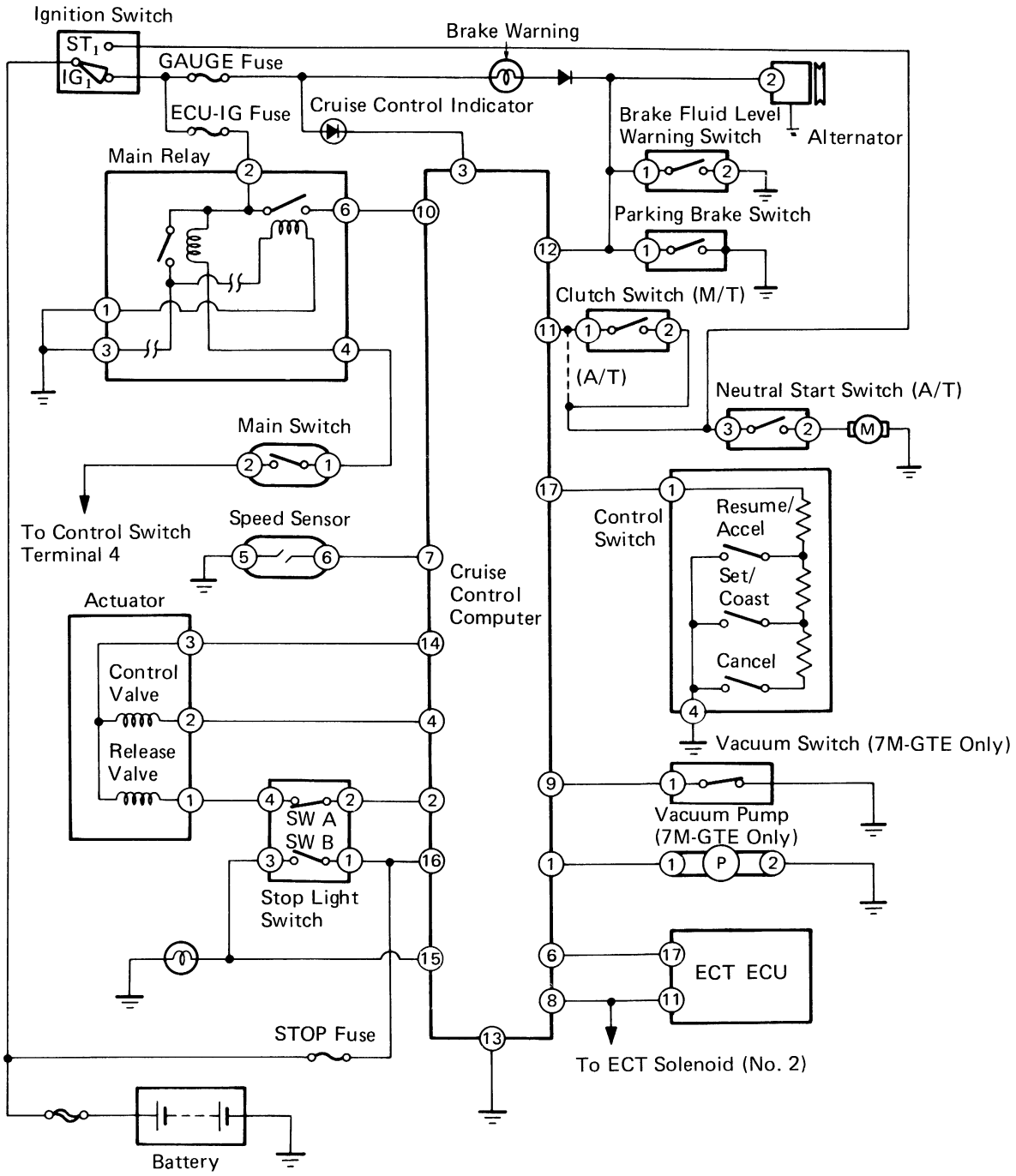

Connectors

Cruise Control Switch

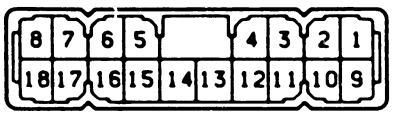

Main Relay

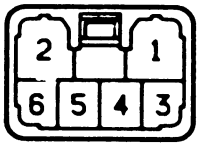

Control & Main Switch
(U.S.A. Only)

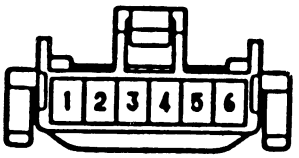

Control Switch
(CANACA Only)

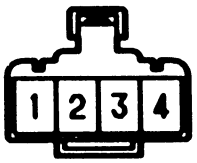

Main Switch
(CANADA Only)

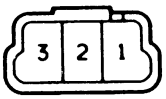

Neutral Start Switch

Actuator

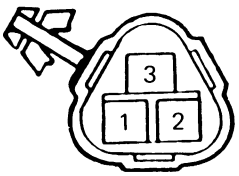

Clutch Switch

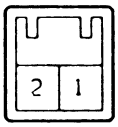

Speed Sensor

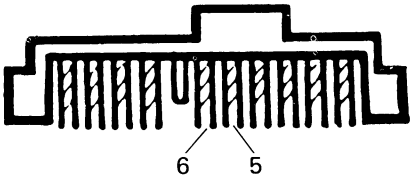

Stop Light Switch

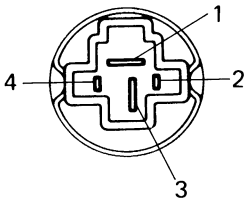

ECT Computer
(Wire Harness Side)

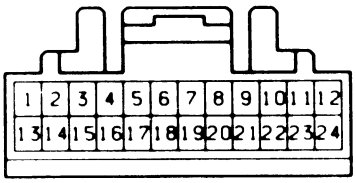

Vacuum Pump
(7M-GTE Only)

Vacuum Switch
(7M-GTE Only)

Alternator
Wire Harness Side

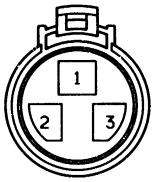

Brake Fluid Level
Warning Switch

Parking Brake Switch

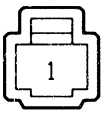

BE4321
1A-3-1-C IS-2-2-B H-1-2

System Description

The current flows from the GAUGE fuse to terminal 3 and terminal 12 of the CCS computer.

When the ignition switch is on, the current flows from the battery to Terminal 2 of the main relay.

1. MAIN SWITCH OPERATION

When the CCS main switch is turned on, the current flows through Terminal 2 — Terminal 4 of the CCS main relay — main switch — body ground.

And then, turn on (closes) the relay contacts in the main relay. As a result, current flows from terminal 2 — terminal 6 of the main relay — So it is supplied to terminal 10 of the CCS computer.

Therefore, the main relay remains on and continues to supply current to the CCS computer.

2. CONTROL SWITCH OPERATION

When the control switch is set each position → sends a signal to terminal *4 or **1 of control switch → terminal 17 of CCS computer.

3. SPEED CONTROL OPERATION

When the vehicle speed is set by the control switch, the CCS computer sends a signal to terminal 2 of CCS computer — terminal 2 — terminal 4 of stop light switch — terminal 1 of actuator (release valve side).

At the same time, the CCS computer sends a signal from terminal 4 of the CCS computer to terminal 2 of actuator (control valve side).

Then, the actuator increases or decreases the throttle valve opening angle in accordance with the signal from the CCS computer.

4. CANCEL SWITCH OPERATION

The CCS is provided with several types of cancel switch, such as the Cancel switch of Control switch, the Stop Light switch, the Parking Brake switch, and the Neutral Start switch (A/T model) or Clutch switch (M/T model).

(a) Cancel Switch of Control Switch

When the Cancel switch is pushed on — Sends a cancellation signal to Terminal *4 or **1 of control switch — Terminal 17 of CCS computer.

(b) Parking Brake Switch

When the parking brake lever is pulled, the Parking Brake switch turned on — Sends a cancellation signal (earth voltage) to Terminal 12 of the CCS computer.

(c) Neutral Start Switch (A/T models)

When the shift lever is set to the P or N range, the Neutral Start switch goes on — Sending a cancellation signal (earth voltage) to Terminal 11 of CCS computer.

(d) Clutch Switch (M/T model)

When the clutch pedal is depressed on, the Clutch Switch goes on — Sending a cancellation signal (earth voltage) to Terminal 11 of CCS computer.

(e) Stop Light Switch

When the brake pedal is depressed, switch A of the stop light switch is turned off — the release valve of actuator is opened.

At the same time, switch B of the stop light switch is turned on — the current flows through terminal 1 — terminal 3 of the stop light switch — stop light — body ground — the battery voltage is applied to terminal 15 of CCS computer via this switch. Thereby, the actuator is shut off.

Therefore, the operation of CCS is canceled and the actuator is shut off due to the operation of these switches.

*: U.S.A (w/ Airbag system)
**: CANADA (w/o Airbag system)

Diagnosis System

OUTPUT OF DIAGNOSTIC CODES

1. READ TYPE A CODE

(a) Turn the ignition switch on.

(b) Push the set/coast switch on, and keep it on.

(c) Push the main switch on.

(d) Push the set/coast switch off.

(e) Meet the conditions listed below.

(f) Read the diagnostic code on the indicator.

No.	Conditions	Indication Code	Diagnosis
1	Set/coast switch on	ON OFF 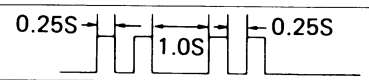	Set/coast switch circuit is normal.
2	Resume/accel switch on	ON OFF	Resume/accel switch circuit is normal.
3	Vacuum switch on (7M-GTE only)	ON OFF	Vacuum switch circuit is normal.
4	Each cancel switch on (Stop light switch, Parking brake switch, Clutch switch, Neutral start switch, Cancel switch)	ON OFF	Each cancel switch circuit is normal.
5	Drive 35 km/h (21 mph) or over	ON OFF	Speed sensor circuit is normal.
6	Drive 35 km/h (21 mph) or below	ON OFF	Speed sensor circuit is normal.

BE0558

HINT:

- To save time performing the next test, do not turn off the ignition switch when steps (a) — (f) are completed.
- Checking of No. 4 code is done with the vehicle jacked up and the engine idling.
- If there is no indication code, perform diagnosis and inspection. (See page BE-64)

2. READ TYPE B CODE

(a) If while driving with the cruise control on, the system is cancelled by a malfunction in either the actuator, speed sensor, or control switch circuit, the indicator will blink 5 times.

(b) While driving at a speed of 16 km/h (10 mph) or less, press the set/coast switch three times in two seconds.

HINT: In order to retain the diagnostic code when a malfunction has occurred, always inspect with the ignition and main switches on.
Should the power be cut, the diagnostic code will be erased from the computer memory.

(c) Read the diagnostic code on the indicator.

Indication Code		Diagnosis
	ON / OFF 0.25S 0.25S	Normal.
11	ON / OFF 0.5S 1.5S 4S	Actuator circuit is abnormal.
21	ON / OFF 0.5S 1.5S	Speed sensor signal circuit is abnormal.
23	ON / OFF	* Vehicle speed decreases to 16 km/h (10 mph) or more below set speed.
31	ON / OFF	Resume/accel switch circuit is abnormal

*: If the set speed can be maintained when the speed control switch is again set at SET/COAST, there is no malfunction.

HINT:

- Indication codes appear in order from No.11.
- Indication is stopped when vehicle speed is over 16 km/h (10 mph) or main switch is turned off.
- If there is no indication code, perform diagnosis and inspection. (See page BE-64)

Troubleshooting

Problem	Inspection Item		No.
Cruise control does not operate.	(a) Inspect type A codes. (b) Inspect type B codes. (c) All codes are normal.	No. 1 NO No. 2 NO No. 3 NO No. 4 NO No. 5 NO No. 6 NO 11 21 23 31	B C K F to J E E D E D, E C A, D, E
Vehicle speed fluctuates when set switch pushed on.	Inspect No. 1 of type A code.	OK NO	D B
Vehicle speed does not decrease when coast switch pushed on.			
Vehicle speed does not accelerate when accel switch pushed on.	Inspect No. 2 of type A code.	OK NO	D C
Vehicle speed does not return to memorized speed when resume switch pushed on.			
Setting speed deviates on high side.	———	———	D,E
Setting speed deviates on low side.			
Return and acceleration response is sluggish.	Inspect No. 3 of type A code.	OK NO	D K
Setting speed does not fluctuate when set switch pushed on.	Inspect No. 4 of type A code.	OK NO	D F
Setting speed does not cancel when brake pedal depressed.	Inspect No. 4 of type A code.	OK NO	D G
Setting speed does not cancel when parking brake pulled.	Inspect No. 4 of type A code.	OK NO	D H
Setting speed does not cancel when clutch pedal depressed (M/T only).	Inspect No. 4 of type A code.	OK NO	D I
Setting speed does not cancel when shifted to "N" range (A/T only).	Inspect No. 4 of type A code.	OK NO	D J
Speed can be set below about 40 km/h (25 mph).	Inspect No. 5 of type A code. Inspect No. 6 of type A code.	OK NO	D E
Cruise control will not disengage even about 40 km/h (25 mph).			
A short period after the O/D cut, (Approx. within 14 seconds) the O/D will resume.	———	———	L

A Inspection of power source circuit.

Turn ignition switch on.

Is ECU-IG fuse normal ?
Is operation normal ?

- No → Replace fuse.
  - No → • Short circuit in wire harness between ECU-IG fuse and terminal 2 of main relay. • Inspect main relay. (See page BE-81, 82)
  - Yes → Fuse faulty.
- Yes ↓

MAIN RELAY

INSPECT GROUND CONNECTION
Is there continuity between terminal 3 and body ground, and between terminal 1 and body ground ?

- No → • Open circuit in wire harness between terminal 3 or 1 of main relay and body ground. • Body ground faulty.
- Yes ↓

INSPECT POWER SOURCE
Is there battery voltage between terminal 2 and body ground ?

- No → Open circuit in wire harness between ECU-IG fuse and terminal 2 of main relay.
- Yes ↓

INSPECT RELAY OPERATION
Is there battery voltage between terminal 6 and body ground with terminal 4 grounded ?

- No → Inspect main relay. (See page BE-81, 82)
- Yes ↓

Is there battery voltage between terminal 6 and body ground ?

- Yes → Inspect main relay. (See page BE-81, 82)
- No ↓

MAIN SWITCH

INSPECT GROUND CONNECTION
Is there continuity between terminal *3 or **2 and body ground ?

- No → • Open circuit in wire harness between terminal *3 or **2 of main switch and body ground. • Body ground faulty.
- Yes ↓

*: U.S.A. (w/ Airbag system)
**: CANADA (w/o Airbag system)

CONTINUED ON NEXT PAGE

CONTINUED FROM PREVIOUS PAGE

INSPECT POWER SOURCE
Is there battery voltage between terminal *5 or **1 and body ground ?

No → Open circuit in wire harness between terminal *5 or **1 of main switch and terminal 4 of main relay.

Yes ↓

INSPECT SWITCH OPERATION
Is main switch operation normal ?
(See page BE-81)

No → Replace main switch.

Yes ↓

COMPUTER

Disconnect connector from computer and inspect connector on wire harness side as follows.

INSPECT GROUND CONNECTION
Is there continuity between terminal 13 and body ground ?

No →
- Open circuit in wire harness between terminal 13 and body ground.
- Body ground faulty.

Yes ↓

INSPECT POWER SOURCE
Is there battery voltage between terminal 10 and body ground with main switch turned on?

No → Open circuit in wire harness between terminal 10 of computer and terminal 6 of main switch.

Yes ↓

Replace computer.

*: U.S.A. (w/ Airbag system)
**: CANADA (w/o Airbag system)

B Inspection of set/coast switch circuit.

Turn ignition switch off.

CONTROL SWITCH

INSPECT GROUND CONNECTION
Disconnect connector from control switch.
Is there continuity between terminal *3 or **4 of wire harness side connector and body ground ?

No →
- Open circuit in wire harness between terminal *3 or **4 and body ground.
- Body ground faulty.

Yes ↓

INSPECT SET/COAST SWITCH OPERATION
Is set/coast switch operation normal ?
(See page BE-81)

No → Replace control switch.

Yes ↓

Connect connector to control switch.

COMPUTER

Disconnect connector from computer and inspect connector on wire harness side as follows.

INSPECT SET/COAST SWITCH CIRCUIT
Is resistance value about 198 Ω between terminal 17 and body ground with set/coast switch pushed on ?

No → Open or short circuit in wire harness between terminal 17 of computer and terminal *4 or **1 of control switch.

Yes ↓

Replace computer.

*: U.S.A. (w/ Airbag system)
**: CANADA (w/o Airbag system)

C Inspection of resume/accel switch circuit.

Turn ignition switch off.

CONTROL SWITCH

INSPECT GROUND CONNECTION
Disconnect connector from control switch.
Is there continuity between terminal *3 or **4 of wire harness side connector and body ground ?

No →
- Open circuit in wire harness between terminal *3 or **4 and body ground.
- Body ground faulty.

Yes ↓

INSPECT RESUME/ACCEL SWITCH OPERATION
Is resume/accel switch operation normal ?
(See page BE-81)

No → Replace control switch.

Yes ↓

Connect connector to control switch.

COMPUTER

Disconnect connector from computer and inspect connector on wire harness side as follows.

INSPECT RESUME/ACCEL SWITCH CIRCUIT
Is resistance value about 68 Ω between terminal 17 and body ground with resume /accel switch pushed on ?

No → Open or short circuit in wire harness between terminal 17 of computer and terminal *4 or **1 of control switch.

Yes ↓

Replace computer.

*: U.S.A. (w/ Airbag system)
**: CANADA (w/o Airbag system)

D Inspection of actuator circuit.

Turn ignition switch off.

VACUUM HOSE

Are there cracks or other damage on the vacuum hose ?
- Yes → Replace vacuum hose.
- No ↓

ACTUATOR

INSPECT CABLE FREEPLAY
Is control cable freeplay less than 10 mm (0.39 in.)?
- No → Adjust control cable freeplay.
- Yes ↓

INSPECT ACTUATOR OPERATION
Disconnect connector from actuator.
Is actuator operation normal ?
(See page BE-83)
- No → Replace actuator.
- Yes ↓

STOP LIGHT SWITCH

INSPECT STOP LIGHT SWITCH CIRCUIT
Disconnect connector from stop light switch.
Is there continuity between terminal 4 of wire harness side connector and body ground ?
- Yes → Short circuit in wire harness between terminal 1 of actuator and terminal 4 of stop light switch.
- No ↓

Connect connector to actuator.
Is there continuity between terminal 4 of wire harness side connector and body ground ?
- No → Open circuit in wire harness between terminal 1 of actuator and terminal 4 of stop light switch.
- Yes ↓

INSPECT STOP LIGHT SWITCH OPERATION
Is stop light switch operation normal ?
(See page BE-83)
- No → Replace stop light switch.
- Yes ↓

Connect connector to stop light switch.

CONTINUED ON NEXT PAGE

CONTINUED FROM PREVIOUS PAGE

COMPUTER

Disconnect connector from computer and inspect connector on wire harness side as follows.

INSPECT STOP LIGHT SWITCH CIRCUIT
Is there continuity between terminals 2 and 14 with stop light switch released ?

No → Open circuit in wire harness between terminals 2 and 14 of computer.

Yes ↓

Is there continuity between terminals 2 and 14 with stop light switch depressed ?

Yes → Short circuit in wire harness between terminals 2 and 14 of computer.

No ↓

Is there continuity between terminals 4 and 14?

No → Open circuit in wire harness between terminals 4 and 14 of computer.

Yes ↓

Replace computer.

E Inspection of speed sensor circuit.

SPEEDOMETER CABLE

INSPECT SPEEDOMETER CABLE
Does the meter fluctuate when driving at a steady speed ?

Yes → Meter cable faulty.

No ↓

Turn ignition switch off.

SPEED SENSOR

INSPECT GROUND CONNECTION
Disconnect connector from meter (speed sensor).
Is there continuity between terminal 5 of wire harness side connector and body ground ?

No → Open circuit in wire harness between terminal 5 and body ground.

Yes ↓

INSPECT SPEED SENSOR OPERATION
Is speed sensor operation normal ?
(See page BE-84)

No → Speed sensor faulty.

Yes ↓

COMPUTER

INSPECT SPEED SENSOR CIRCUIT
Disconnect connector from computer.
Is there continuity between terminal 6 of wire harness side connector and terminal 7 of computer.

No → Open circuit wire harness between terminal 6 of speed sensor and terminal 7 of computer.

Yes ↓

Replace computer.

F Inspection of cancel switch circuit.

Turn ignition switch off.

CONTROL SWITCH

INSPECT GROUND CONNECTION
Disconnect connector from control switch.
Is there continuity between terminal *3 or **4 of wire harness side connector and body ground ?

No →
- Open circuit in wire harness between terminal *3 or **4 and body ground.
- Body ground faulty.

Yes ↓

INSPECT CANCEL SWITCH OPERATION
Is cancel switch operation normal ?
(See page BE-81)

No → Replace control switch.

Yes ↓

Connect connector to control switch.

COMPUTER

Disconnect connector from computer and inspect connector on wire harness side as follows.

INSPECT CANCEL SWITCH CIRCUIT
Is resistance value about 418 Ω between terminal 17 and body ground with cancel switch pushed on ?

No → Open or short circuit in wire harness between terminal 17 of computer and terminal *4 or **1 of control switch.

Yes ↓

Replace computer.

*: U.S.A. (w/ Airbag system)
**: CANADA (w/o Airbag system)

G Inspection of stop light switch circuit.

Turn ignition switch off.

Is STOP fuse normal ?
- No → Replace fuse. Is operation normal ?
  - No → Short circuit in wire harness between terminal 16 of computer or terminal 1 of stop light switch and fuse.
  - Yes → Fuse faulty.
- Yes ↓

STOP LIGHT SWITCH

INSPECT GROUND CONNECTION
Disconnect connector from stop light switch.
Is there continuity between terminal 3 of wire harness side connector and body ground ?
- No → • Open circuit in wire harness between terminal 3 and body ground. • Body ground faulty.
- Yes ↓

INSPECT STOP LIGHT SWITCH OPERATION
Is stop light switch operation normal ?
(See page BE-83)
- No → Replace stop light switch.
- Yes ↓

Connect connector to stop light switch.

COMPUTER

Disconnect connector from computer and inspect connector on wire harness side as follows.

INSPECT STOP FUSE CIRCUIT
Is there battery voltage between terminal 16 and body ground with brake pedal released ?
- No → Open circuit in wire harness between terminal 16 of computer and STOP fuse.
- Yes ↓

INSPECT STOP LIGHT SWITCH CIRCUIT
Is there battery voltage between terminal 15 and body ground with brake pedal depressed?
- No → Open circuit in wire harness between terminal 15 of computer and terminal 3 of stop light switch.
- Yes ↓

Replace computer.

H Inspection of parking brake switch circuit.

Turn ignition switch off.

ALTERNATOR

INSPECT ALTERNATOR OPERATION
Is alternator operation normal ?
(See page CH-4)

No → Replace alternator.

Yes

BRAKE FLUID LEVEL WARNING SWITCH

INSPECT GROND CONNECTION
Disconnect connector from brake fluid level warning switch. Is there continuity between terminal 2 of wire harness side connector and body ground ?

No →
- Open circuit in wire harness between terminal 2 and body ground.
- Body ground faulty.

Yes

INSPECT BRAKE WARNING SWITCH
Is brake fluid level warning switch operation normal ?
(See page BE-43)

No → Replace brake warning switch.

Yes

Connect the connector to brake warning switch.

PARKING BRAKE SWITCH

INSPECT PARKING BRAKE SWITCH OPERATION
Disconnect connector from parking brake switch.
Is parking brake switch operation normal ?
(See page BE-82)

No → Replace parking brake switch.

Yes

Connect connector to parking brake switch.

COMPUTER

Disconnect connector from computer and inspect connector on wire harness side as follows.

Remove CHARGE fuse and ignition switch turned on.

Is there no voltage between terminal 12 and body ground with parking brake pulled up ?

No → Open circuit in wire harness between terminal 12 of computer and terminal 1 of parking brake switch.

Yes

Is there battery voltage between terminal 12 and body ground with parking brake released ?

No → Short circuit in wire harness between terminal 12 of computer and terminal 1 of parking brake switch, terminal 1 of brake fluid level warning switch or terminal 2 of alternator.

Yes

Replace computer.

I Inspection of clutch switch circuit.

Turn ignition switch off.

CLUTCH SWITCH

INSPECT GROUND CONNECTION
Disconnect connector from clutch switch.
Is there continuity between terminal 2 of wire harness side connector and body ground ?

No →
- Open circuit in wire harness between terminal 2 and body ground.
- Body ground faulty.

Yes ↓

INSPECT CLUTCH SWITCH OPERATION
Is clutch switch operation normal ?
(See page BE-82)

No → Replace clutch switch.

Yes ↓

Connect connector to clutch switch.

COMPUTER

Disconnect connector from computer and inspect connector on wire harness side as follows.

INSPECT CLUTCH SWITCH CIRCUIT
Is there continuity between terminal 11 and body ground with clutch pedal depressed ?

No → Open circuit in wire harness between terminal 11 of computer and terminal 1 of clutch switch.

Yes ↓

Is there continuity between terminal 11 and body ground with clutch pedal released ?

Yes → Short circuit in wire harness between terminal 11 of computer and terminal 1 of clutch switch.

No ↓

Replace computer.

J Inspection of neutral start switch circuit.

Turn ignition switch off.

NEUTRAL START SWITCH

INSPECT GROUND CONNECTION
Disconnect connector from neutral start switch.
Is there continuity between terminal 2 of wire harness side connector and body ground ?

No → Open circuit in wire harness between terminal 2 and body ground.

Yes ↓

INSPECT NEUTRAL START SWITCH OPERATION
Is neutral start switch operation normal ?
(See page BE-82)

No → Replace neutral switch.

Yes ↓

Connect connector to neutral start switch.

COMPUTER

Disconnect connector from computer and inspect connector on wire harness side as follows.

INSPECT NEUTRAL START SWITCH CIRCUIT
Is there continuity between terminal 11 and body ground when shifted to "N" and "P" range ?

No → Open circuit in wire harness between terminal 11 of computer and terminal 3 of neutral start switch.

Yes ↓

Replace computer.

K Inspection of vacuum circuit (7M-GTE only).

Turn ignition switch off.

No

VACUUM HOSE

Are there cracks or other damage on the vacuum hose ?

Yes → Replace vacuum hose.

No

VACUUM SWITCH

INSPECT VACUUM SWITCH CIRCUIT
Disconnect connector from vacuum switch.
Is there continuity between terminal 1 of vacuum switch and body ground ?

No →
- Vacuum switch improperly installed.
- Body ground faulty.

Yes

INSPECT VACUUM SWITCH OPERATION
Is vacuum switch normal ?
(See page BE-84)

No → Replace vacuum switch.

Yes

VACUUM PUMP

INSPECT GROUND CONNECTION
Disconnect connector from vacuum pump.
Is there continuity between terminal 2 of wire harness side connector and body ground ?

No →
- Open circuit in wire harness between terminal 2 and body ground.
- Body ground faulty.

Yes

INSPECT VACUUM PUMP OPERATION
Is vacuum pump operation normal ?
(See page BE-84)

No → Replace vacuum pump.

Yes

Connect connector to vacuum switch and pump.

CONTINUED ON NEXT PAGE

CONTINUED FROM PREVIOUS PAGE

COMPUTER

Disconnect connector from computer and inspect connector on wire harness side as follows.

INSPECT VACUUM SWITCH CIRCUIT
Is there continuity between terminal 9 and body ground ?

- No → Open circuit in wire harness between terminal 9 of computer and teminal 1 of vacuum switch.
- Yes ↓

Start engine (idling).

Is there continuity between terminal 9 and body ground ?

- Yes → Short circuit in wire harness between terminal 9 of computer and terminal 1 of vacuum switch.
- No ↓

Stop the engine.

INSPECT VACUUM PUMP CIRCUIT
Is there continuity between terminal 1 and body ground ?

- No → Open circuit in wire harness between terminal 1 of computer and terminal 1 of vacuum pump.
- Yes ↓

Is there continuity between terminal 1 and body ground when disconnect connector from vacuum pump ?

- Yes → Short circuit in wire harness between terminal 1 of computer and terminal 1 of vacuum pump.
- No ↓

Replace computer.

L Inspection of ECT solenoid circuit.

Turn ignition switch off.

COMPUTER

Disconnect connector from computer and inspect connector on wire harness side as follows.

INSPECT ECT SOLENOID CIRCUIT
Is there continuity between terminal 8 of wire harness side connector and terminal 11 of ECT computer ?

No → Open circuit in wire harness between terminal 8 of computer and terminal 11 of ECT computer.

Yes ↓

Is resistance value about 11 — 15 ohm between terminal 8 of wire harness side connector and body ground ?

No → Open or short circuit in wire harness between terminal 8 of computer and terminal 11 of ECT computer or ECT solenoid (No. 2).

Yes ↓

INSPECT OVERDRIVE CIRCUIT
Is there continuity between terminal 6 of wire harness side connector and terminal 17 of ECT computer ?

No → Open circuit in wire harness between terminal 6 of computer and terminal 17 of ECT computer.

Yes ↓

Replace computer.

Wire Harness Side

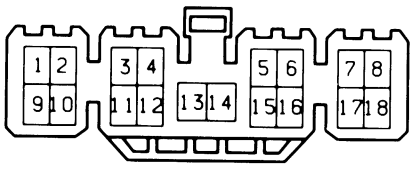

S-18-1

Cruise Control Computer Circuit

INSPECTION OF COMPUTER CIRCUIT

Disconnect the computer connector and inspect the connector on the wire harness side as shown in the chart below.

Connection or Measure Item	Check For	Tester Connection	Condition	Specified Value
Stop Fuse	Voltage	16 – Body ground	———	Battery voltage
Stop Light Switch	Voltage	15 – Body ground	Brake pedal depressed	Battery voltage
			Brake pedal released	No voltage
Stop Light Switch and Release Valve	Resistance	2 – 14	Brake pedal released	Approx. 68 Ω
Control Valve	Resistance	4 – 14	———	Approx. 30 Ω
Main Relay	Voltage	10 – Body ground	Turn ignition switch and main switch on	Battery voltage
			Turn ignition switch or main switch off	No voltage
Cruise Control Indicator	Voltage	3 – Body ground	Turn ignition switch on	Battery voltage
			Turn ignition switch off	No voltage
Control Switch (set/coast)	Resistance	17 – Body ground	Push set/coast switch on	Approx. 198 Ω
Control Switch (resume/accel)	Resistance	17 – Body ground	Push resume/accel switch on	Approx. 68 Ω
Control Switch (cancel)	Resistance	17 – Body ground	Push cancel switch on	Approx. 418 Ω
Speed Sensor	Continuity	7 – Body ground	Vehicle moving slowly	1 pulse each 40 cm (15.75 in.)
Clutch Switch (M/T) or Neutral Start Switch (A/T)	Continuity	11 – Body ground	Clutch pedal depressed or shifted into "N" range	Continuity
			Clutch pedal released or shifted into only range except "N" and "P" range	No continuity
Parking Brake Switch	Voltage	12 – Body ground	Disconnect alternator connector and ignition switch turned on with parking brake lever pulled up.	No voltage
			Disconnect alternator connector and ignition switch turned on with parking brake lever released.	Battery voltage
Vacuum Switch (7M-GTE only)	Continuity	9 – Body ground	Apply vacuum about 170 mmHg (6.69 in.Hg, 22.7 kPa)	No continuity
			No vacuum	Continuity
Vacuum Pump (7M-GTE only)	Continuity	1 – Body ground	———	Continuity
Body Ground	Continuity	13 – Body ground	———	Continuity

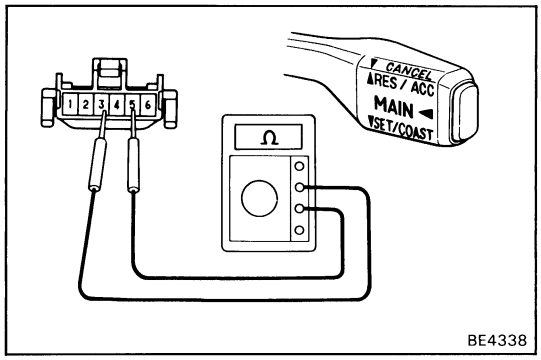

BE4338

Main & Control Switch (U.S.A.)

INSPECTION OF MAIN & CONTROL SWITCH

INSPECT SWITCH OPERATION

(a) Push the main switch ON, and check that there is continuity between terminals 3 and 5.

(b) Push the main switch OFF, and check that there is no continuity between terminals 3 and 5.

If operation is not as specified, replace the switch.

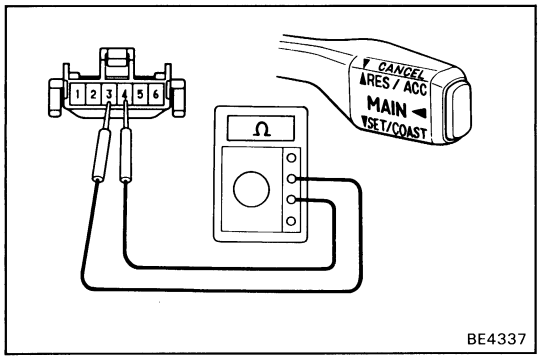

BE4337

INSPECT SWITCH RESISTANCE

Inspect the switch resistance value between terminals 3 and 4 at each switch position.

Switch position	Resistance value (Ω)
RESUME/ACCEL	68
SET/COAST	198
CANCEL	418

If resistance value is not as specified, replace the switch.

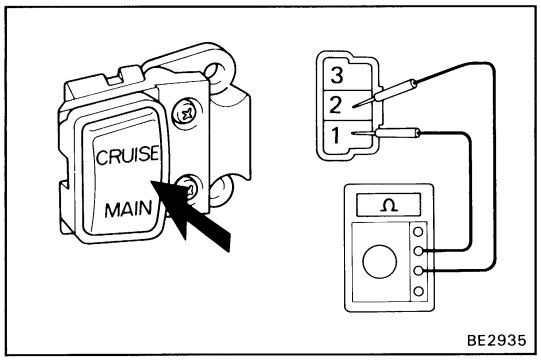

BE2935

Main Switch (CANADA)

INSPECTION OF MAIN SWITCH

INSPECT SWITCH OPERATION

(a) Turn the main switch ON, and check that there is continuity between terminals 1 and 2.

(b) Turn the main switch OFF, and check that there is no continuity between terminals 1 and 2.

If operation is not as specified, replace the switch.

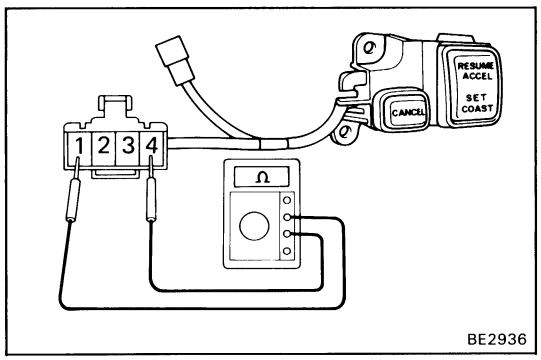

BE2936

Control Switch (CANADA)

INSPECTION OF CONTROL SWITCH

INSPECT SWITCH RESISTANCE

Inspect the switch resistance value between terminals 1 and 4 at each switch position.

Switch position	Resistance value (Ω)
RESUME/ACCEL	68
SET/COAST	198
CANCEL	418

If resistance value is not as specified, replace the switch.

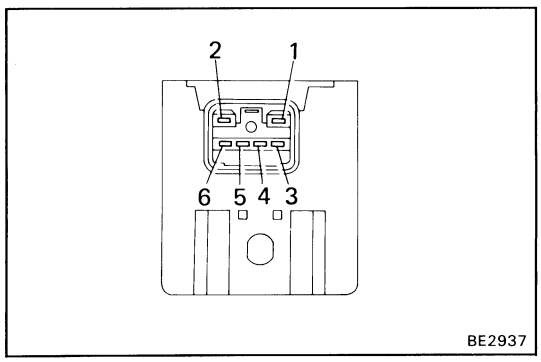

BE2937

Main Relay

INSPECTION OF MAIN RELAY

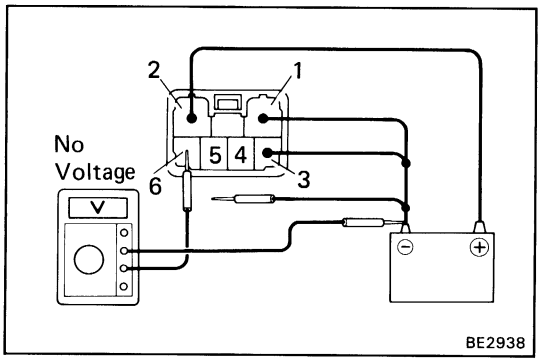

INSPECT RELAY OPERATION

(a) Connect the positive (+) lead from the battery to terminal 2 and the negative (−) leads to terminals 1 and 3.

(b) Ground terminal 6 through the voltmeter.

(c) Check that the voltmeter indicates no voltage.

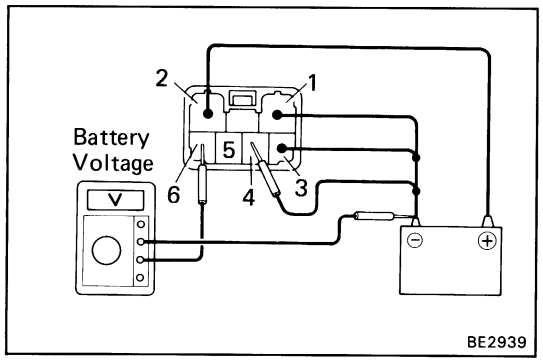

(d) Ground terminal 4 and check that the voltmeter indicates battery voltage.

If operation is not as specified, replace the relay.

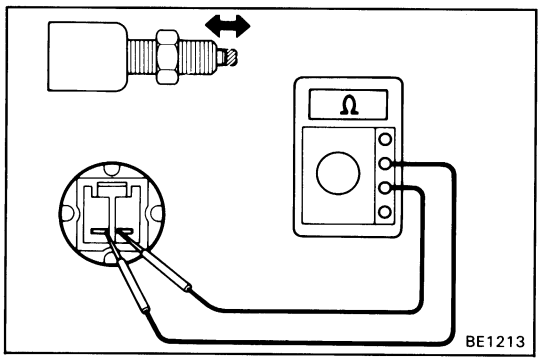

Clutch Switch

INSPECTION OF SWITCH

INSPECT SWITCH CONTINUITY

(a) Check that there is continuity between terminals with the switch free.
(Clutch pedal depressed)

(b) Check that there is no continuity between terminals with the switch pin pushed.
(Clutch pedal released)

If continuity is not as specified, replace the switch.

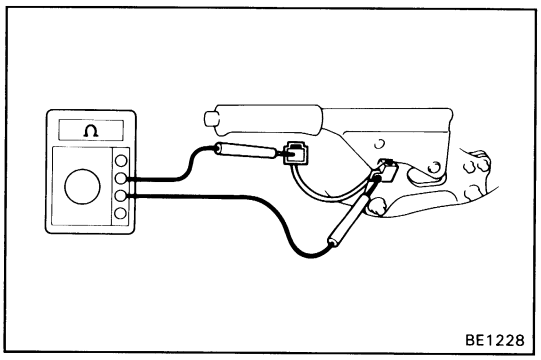

Parking Brake Switch

INSPECTION OF SWITCH

INSPECT SWITCH CONTINUITY

(a) Check that there is continuity between terminal and the switch set screw with the parking brake lever pulled up. (Switch free)

(b) Check that there is no continuity between terminal and the switch set screw with the parking brake lever released. (Switch pin pushed)

If continuity is not as specified, replace the switch.

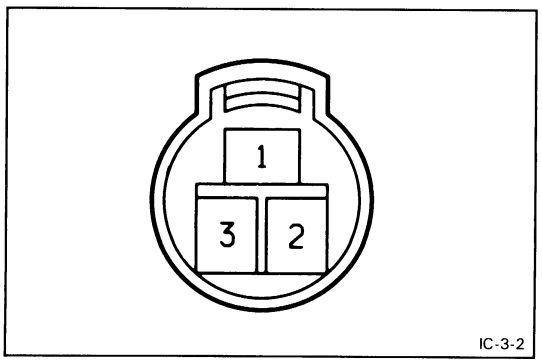

Neutral Start Switch

INSPECTION OF SWITCH

INSPECT SWITCH CONTINUITY

Check that there is continuity between terminals 2 and 3 with switch position "P"and "N" ranges.

If continuity is not as specified, replace the switch.

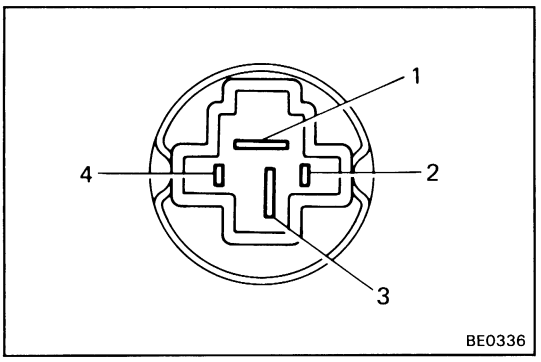

Stop Light Switch

INSPECTION OF SWITCH

INSPECT SWITCH CONTINUITY

Inspect the switch continuity between terminals.

Terminal / Switch position	1	2	3	4
Switch free	○		○	
Switch pin pushed		○		○

If continuity is not as specified, replace the switch.

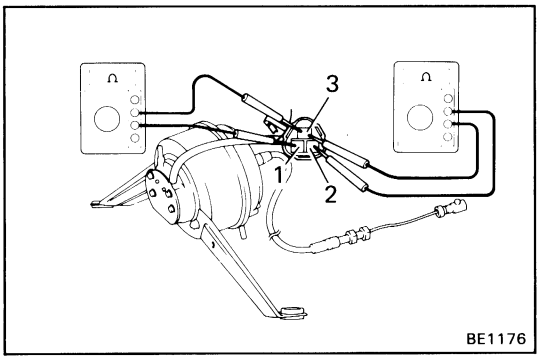

Actuator

INSPECTION OF SENSOR

1. INSPECT ACTUATOR RESISTANCE

Measure the resistance value between terminals as follows.

Resistance: 3 — 2 approx. 30 Ω
1 — 3 approx. 68 Ω

If the resistance value is not as specified, replace the actuator.

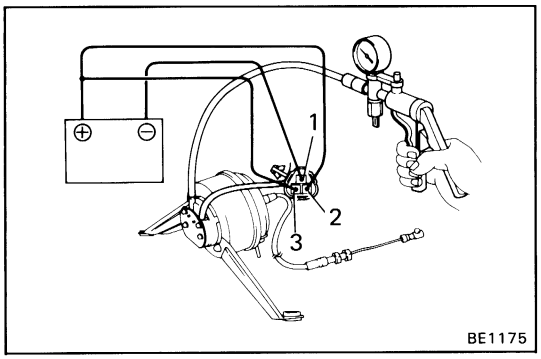

2. INSPECT ACTUATOR OPERATION

(a) Connect the positive (+) lead from battery to terminals 2 and 1, and the negative (—) lead to terminal 3.

(b) Slowly apply vacuum from 0 — 300 mmHg (0 — 11.81 in.Hg, 0 — 40.0 kPa), and check that the control cable can be pulled smoothly.

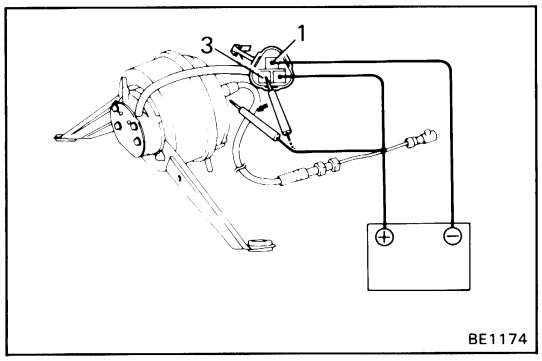

(c) Disconnect terminal 2 or 1 and check that the control cable returns to its original position and the vacuum returns to 0 mmHg (0 in.Hg, 0 kPa).

If operation is not as specified, replace the actuator.

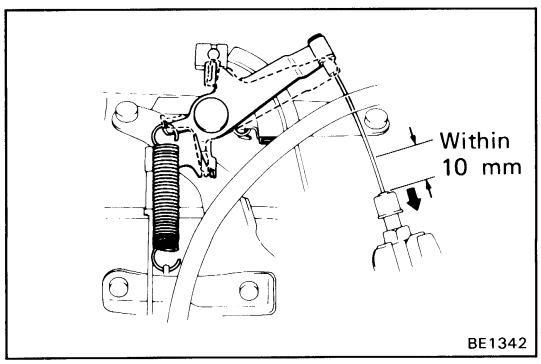

3. INSPECT CONTROL CABLE FREEPLAY

(a) Connect the positive (+) lead from battery to terminals 2 and 3, and 1 the negative (—) lead to terminal 1.

(b) Slowly apply vacuum from 0 — 300 mmHg (0 — 11.81 in.Hg, 0 — 40.0 kPa), and measure the cable stroke to where the throttle valve begins to open.

Standard: Approx. within 10 mm (0.39 in.) with a slight amount of freeplay.

If freeplay is not as specified, adjust the control cable freeplay.

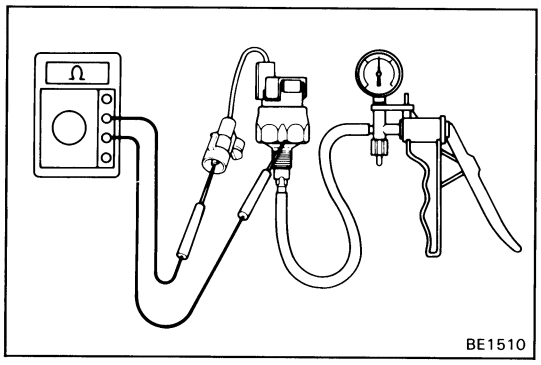

Vacuum Switch (7M-GTE only)

INSPECTION OF SWITCH

INSPECT SWITCH OPERATION

(a) Check that there is no continuity between terminal and body with a vacuum of 170 ± 10 mmHg (6.69 ± 0.39 in.Hg, 22.7 ± 1.3 kPa) or above.

(b) Check that there is continuity between terminal and body with no vacuum.

If operation is not as specified, replace the switch.

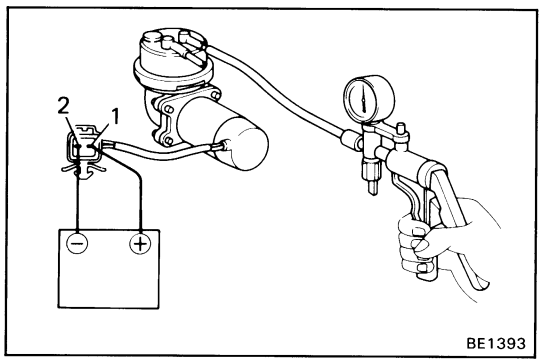

Vacuum Pump (7M-GTE only)

INSPECTION OF PUMP

INSPECT VACUUM PUMP OPERATION

(a) Connect a vacuum gauge to the ACT side of the pump.

(b) Connect the positive (+) lead from the battery to terminal 1 and the negative (−) lead to terminal 2.

(c) Check that there is the vacuum of 200 mmHg (7.87 in.Hg, 26.7 kPa) or above.

If operation is not as specified, replace the pump.

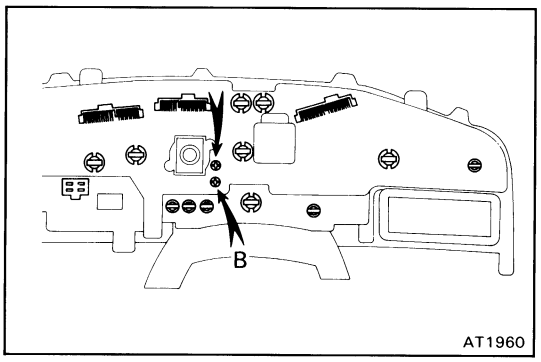

Speed Sensor

INSPECTION OF SWITCH

INSPECT SENSOR CONTINUITY

Check that there is continuity between A and B four times per each revolution of the shaft.

If continuity is not as specified, replace the sensor.

THEFT DETERRENT SYSTEM (USA Only)

Wiring Diagram

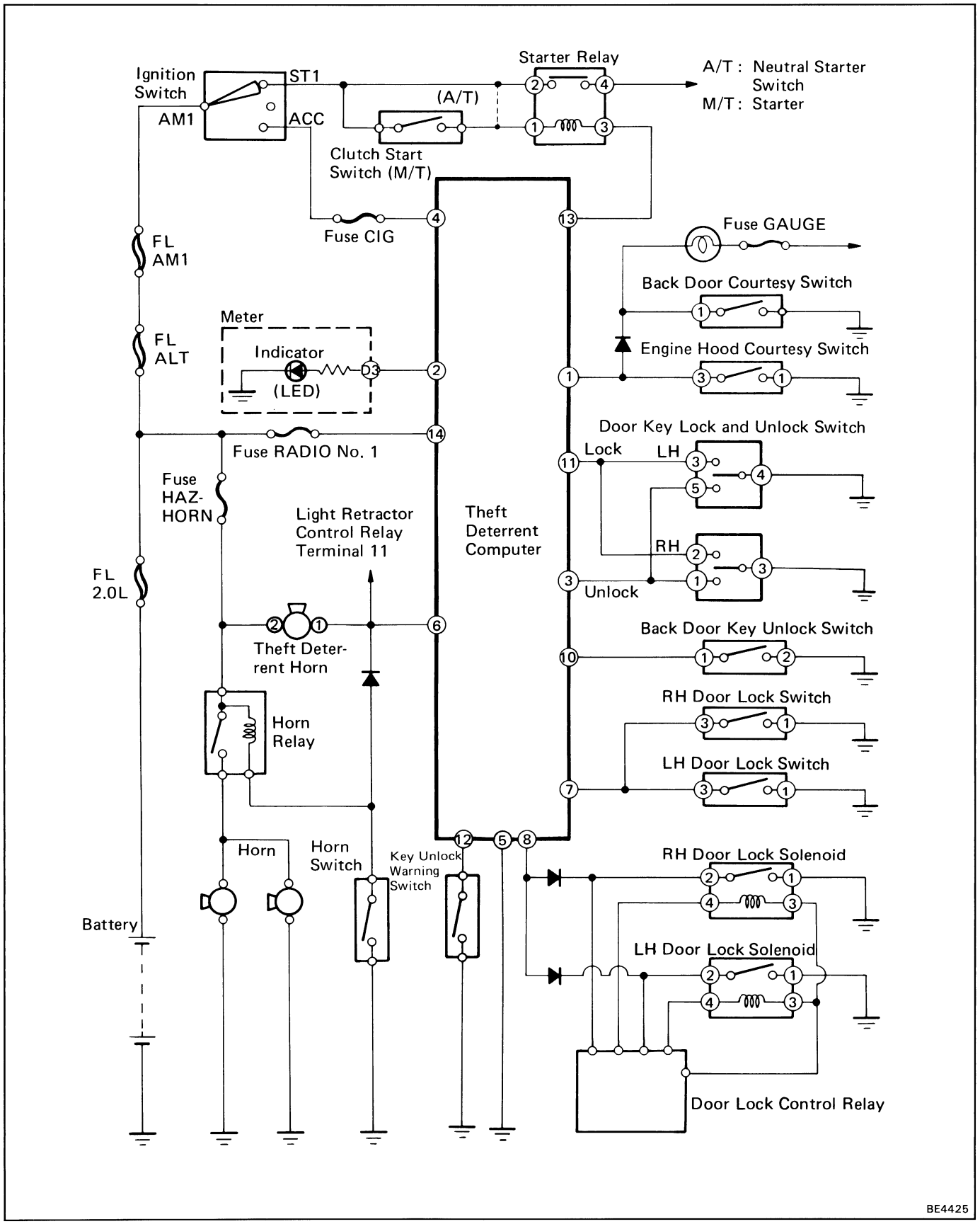

Connector

Theft Deterrent Computer

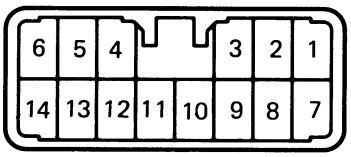

Ignition Switch

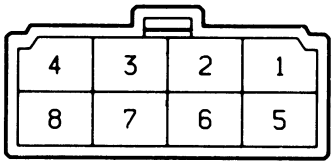

LH Front Door Key Lock and Unlock Switch

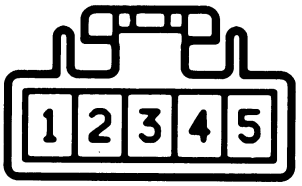

RH Front Door Key Lock and Unlock Switch

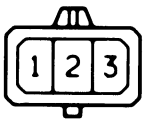

Back Door Key Unlock Switch

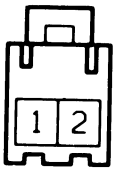

Door Lock Solenoid

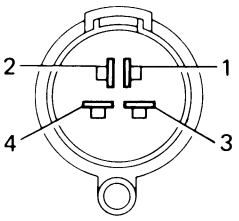

Back Door Courtesy Switch

Engine Hood Courtesy Switch

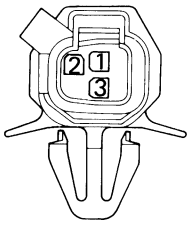

Light Retractor Control Relay

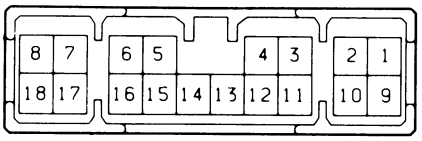

Theft Deterrent Horn

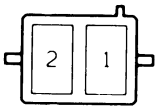

Starter Relay

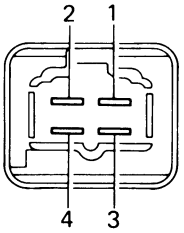

Door Lock Switch

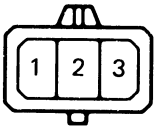

S-14-2-B H-8-2 IU-5-1
U-3-1 G-2-1 BE1244
GA-1-1 BE1249 S-18-2
BE1254 ST0280 U-3-1

Troubleshooting

- Check that the operation of other systems (Door lock control system etc.) are normal.
- When the system is not operating, lower the door glass and confirm under what conditions it does not operate, or malfunctions.

Problem	Inspection Item	Section
Theft deterrent system can not be set.	Inspection of power source circuit	A
Indicator light does not light even if theft deterrent system operated.	Inspection of indicator light circuit	H
Theft deterrent system does not operate when front door opened.	Inspection of front door lock solenoid circuit Inspection of door lock switch circuit	E F
Theft deterrent system does not operate when back door opened.	Inspection of back door and/or engine hood courtesy switch circuit	G
Theft deterrent system does not operate when engine hood opened.	Inspection of back door and/or engine hood courtesy switch circuit	G
Theft deterrent system does not cancel when front door unlocked with key.	Inspection of front door key lock and unlock switch circuit	C
Theft deterrent system does not cancel when back door unlocked with key.	Inspection of back door key unlock switch circuit	D
Theft deterrent system does not cancel when ignition switch turned to ON or ACC position.	Inspection of ignition switch circuit	B
Starter cut system does not operate even if theft deterrent system operated.	Inspection of starter cut system circuit	I
Starter cut system does not cancel even if theft deterrent system canceled.	Inspection of starter cut system circuit	I
Horn does not blow even if theft deterrent system operated.	Inspection of theft deterrent horn circuit	L
Headlights and taillights do not flash even if theft deterrent system operated.	Inspection of light retractor control relay circuit	K
Theft deterrent horn blows and/or headlight and taillight flash even if system is not set.	Inspection of theft deterrent horn and light retractor control relay circuit	J

A INSPECTION OF POWER SOURCE CIRCUIT.

Turn ignition switch off.

Is DOME fuse normal?

- No → Replace fuse. Is operation normal?
  - No → Short circuit in wire harness between fuse and terminal 14 of computer.
  - Yes → Fuse faulty.
- Yes ↓

COMPUTER

Disconnect computer connector and inspect connector on wire harness side as follows.

INSPECT POWER SOURCE
Is there battery voltage between terminal 14 and ground.

- No → Open circuit in wire harness between fuse and terminal 14 of computer.
- Yes ↓

INSPECT GROUND CONNECTION
Is there continuity between terminal 5 and ground.

- No →
  - Open circuit in wire harness between terminal 5 of computer and ground.
  - Ground faulty.
- Yes ↓

INSPECT FOLLOWING SECTIONS:

Ignition switch circuit .....Section B
Front door lock solenoid circuit .....Section E
Front door key lock and unlock switch circuit .....Section C
Door lock switch circuit.....Section F
Back door key unlock switch circuit ....Section D
Back door courtesy switch circuit .....Section G
Engine hood switch circuit.....Section G

Yes ↓

Replace computer.

B INSPECTION OF IGNITION SWITCH CIRCUIT.

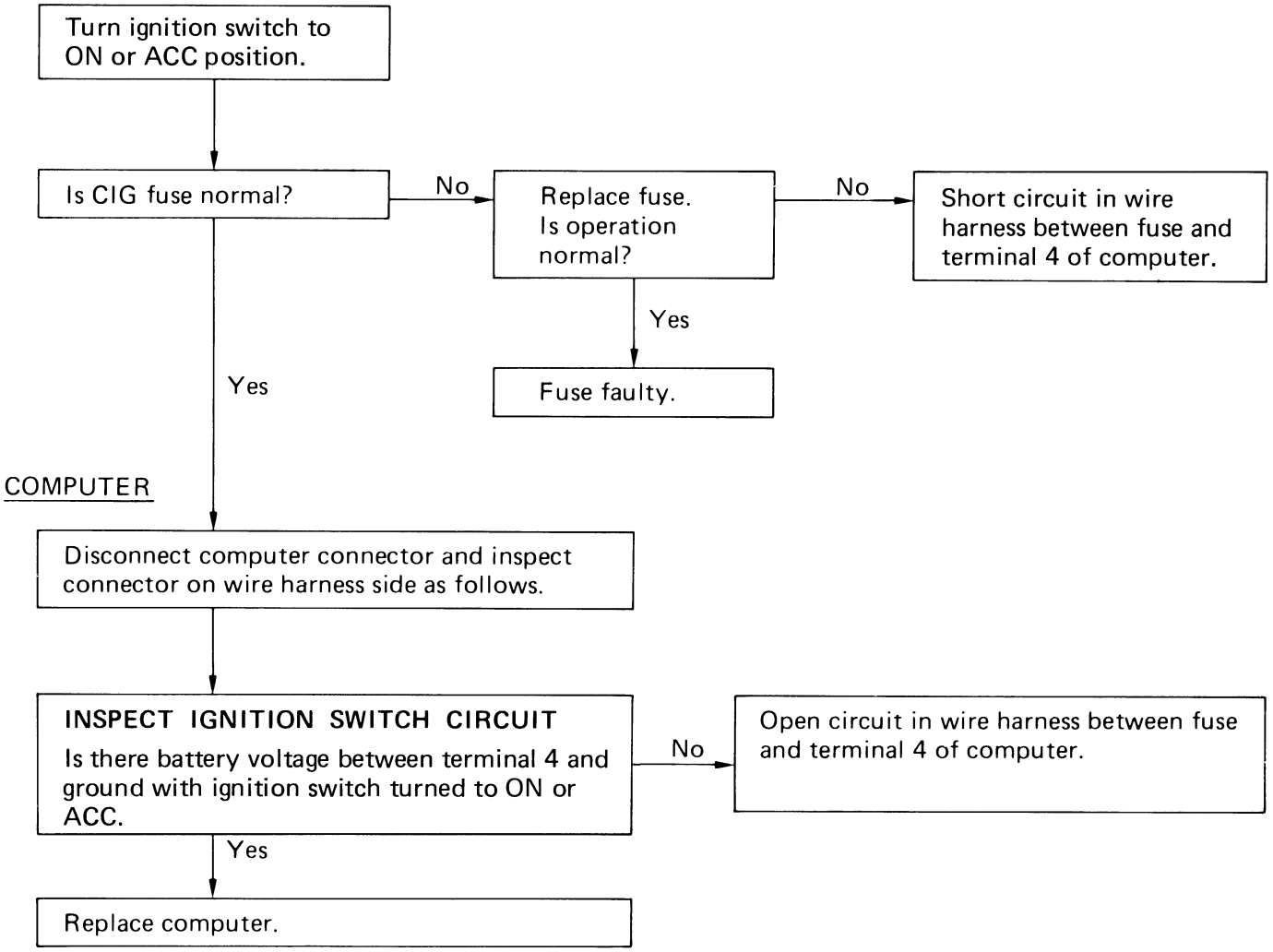

C INSPECTION OF FRONT DOOR KEY LOCK AND UNLOCK SWITCH CIRCUIT.

Turn ignition switch off.

COMPUTER

Disconnect computer connector and inspect connector on wire harness side as follows.

LH FRONT DOOR

INSPECT KEY LOCK SWITCH CIRCUIT
Is there continuity between terminal 11 and ground with LH front door locked with key?
- No → Open circuit in LH front door key lock switch circuit.
- Yes ↓

Is there continuity between terminal 11 and ground with LH front door unlocked with key?
- Yes → Short circuit in LH front door key lock switch circuit.
- No ↓

INSPECT KEY UNLOCK SWITCH CIRCUIT
Is there continuity between terminal 3 and ground with LH front door unlocked with key?
- No → Open circuit in LH front door key unlock switch circuit.
- Yes ↓

Is there continuity between terminal 3 and ground with LH front door locked with key?
- Yes → Short circuit in LH front door key unlock switch circuit.
- No ↓

RH FRONT DOOR

INSPECT KEY LOCK SWITCH CIRCUIT
Is there continuity between terminal 11 and ground with RH front door locked with key?
- No → Open circuit in RH front door key lock switch circuit.
- Yes ↓

Is there continuity between terminal 11 and ground with RH front door unlocked with key?
- Yes → Short circuit in RH front door key lock switch circuit.
- No ↓

INSPECT KEY UNLOCK SWITCH CIRCUIT
Is there continuity between terminal 3 and ground with RH front door unlocked with key?
- No → Open circuit in RH front door key unlock switch circuit.
- Yes ↓

Is there continuity between terminal 3 and ground with RH front door locked with key?
- Yes → Short circuit in RH front door key unlock switch circuit.
- No ↓

Replace computer. Then recheck system.

D INSPECTION OF BACK DOOR KEY UNLOCK SWITCH CIRCUIT.

Turn ignition switch off.

COMPUTER

Disconnect computer connector and inspect connector on wire harness side as follows.

INSPECT BACK DOOR KEY UNLOCK SWITCH CIRCUIT

Is there continuity between terminal 10 and ground with key position is normal?

Yes → Short circuit in back door key unlock switch circuit.

No ↓

Is there continuity between terminal 10 and ground with back door unlocked with key?

No → Open circuit in back door key unlock switch circuit.

Yes ↓

Replace computer.

E INSPECTION OF FRONT DOOR LOCK SOLENOID CIRCUIT.

Turn ignition switch off.

COMPUTER

Disconnect computer connector and inspect connector on wire harness side as follows.

INSPECT LH FRONT DOOR LOCK SOLENOID CIRCUIT

Lock RH front door.
* Is there continuity between terminal 8 and ground with LH door unlocked?

No → Open circuit in LH door lock solenoid circuit.

Yes ↓

INSPECT RH FRONT DOOR LOCK SOLENOID CIRCUIT

Lock LH front door.
* Is there continuity between terminal 8 and ground with RH door unlocked?

No → Open circuit in RH door lock solenoid circuit.

Yes ↓

Replace computer.

*: This circuit includes the diode. If the circuit shows no continuity, change the positive and negative probes and recheck the circuit.

F INSPECTION OF DOOR LOCK SWITCH CIRCUIT.

Turn ignition switch off.

COMPUTER

Disconnect computer connector and inspect connector on wire harness side as follows.

INSPECT LH DOOR LOCK SWITCH CIRCUIT

Close RH front door.
Is there continuity between terminal 7 and ground with LH front door opened?

No → Open circuit in LH door lock switch circuit.

Yes ↓

INSPECT RH DOOR LOCK SWITCH CIRCUIT

Close LH front door.
Is there continuity between terminal 7 and ground with RH front door opened?

No → Open circuit in RH door lock switch circuit.

Yes ↓

Replace computer.

G INSPECTION OF BACK DOOR AND/OR ENGINE HOOD COURTESY SWITCH CIRCUIT.

Turn ignition switch off.

COMPUTER

Disconnect computer connector and inspect connector on wire harness side as follows.

INSPECT BACK DOOR COURTESY SWITCH CIRCUIT

Close engine hood.

* Is there continuity between terminal 1 and ground with back door opened?

No → Open circuit in back door courtesy switch circuit.

Yes ↓

INSPECT ENGINE HOOD COURTESY SWITCH CIRCUIT

Close back door.

Is there continuity between terminal 1 and ground with engine hood opened?

No → Open circuit in engine hood courtesy switch circuit.

Yes ↓

Replace computer.

*: This circuit includes the diode. If the circuit shows no continuity, change the positive and negative probes and recheck the circuit.

H INSPECTION OF INDICATOR LIGHT CIRCUIT.

Turn ignition switch off.

COMPUTER

Disconnect computer connector and inspect connector on wire harness side as follows.

INSPECT INDICATOR LIGHT CIRCUIT

Connect the positive lead from the ohmmeter to terminal 2 and negative lead from the ohmmeter to ground.
* Is there continuity between terminal 2 and ground?

No → Open circuit in indicator light circuit.

Yes → Replace computer.

*: This circuit includes the LED. If the circuit shows no continuity, change the positive and negative probes and recheck the circuit.

I INSPECTION OF STARTER CUT SYSTEM CIRCUIT.

Turn ignition switch off.

COMPUTER

Disconnect computer connector and inspect connector on wire harness side as follows.

INSPECT STARTER CUT SYSTEM CIRCUIT

Depress clutch pedal. (M/T only)
Is there battery voltage between terminal 13 and ground with ignition switch turned to ST?

No → Open circuit in starter relay circuit.

Yes → Replace computer.

HINT: If starter does not operate, even when system is canceled, before checking the circuit, use the key turn the front door lock to the unlock position and recheck starter operation.

J INSPECTION OF THEFT DETERRENT HORN AND LIGHT RETRACTOR CONTROL RELAY CIRCUIT.

Turn ignition switch off.

COMPUTER

Disconnect computer connector and check that stop the theft deterrent horn blows and/or headlight and taillight flash.

No → Short circuit in light retractor control relay or theft deterrent horn circuit.

Yes

Replace computer.

K INSPECTION OF LIGHT RETRACTOR CONTROL RELAY CIRCUIT.

Turn ignition switch off.

COMPUTER

Disconnect computer connector and inspect connector on wire harness side as follows.

INSPECT LIGHT RETRACTOR CONTROL RELAY CIRCUIT

Remove the HAZ-HORN fuse.
Ground the terminal 6 and check that flash the headlights and taillights.

No →
- Open circuit in light retractor control relay circuit.
- Check the light retractor control relay.

Yes

Replace computer.

L INSPECTION OF THEFT DETERRENT HORN CIRCUIT.

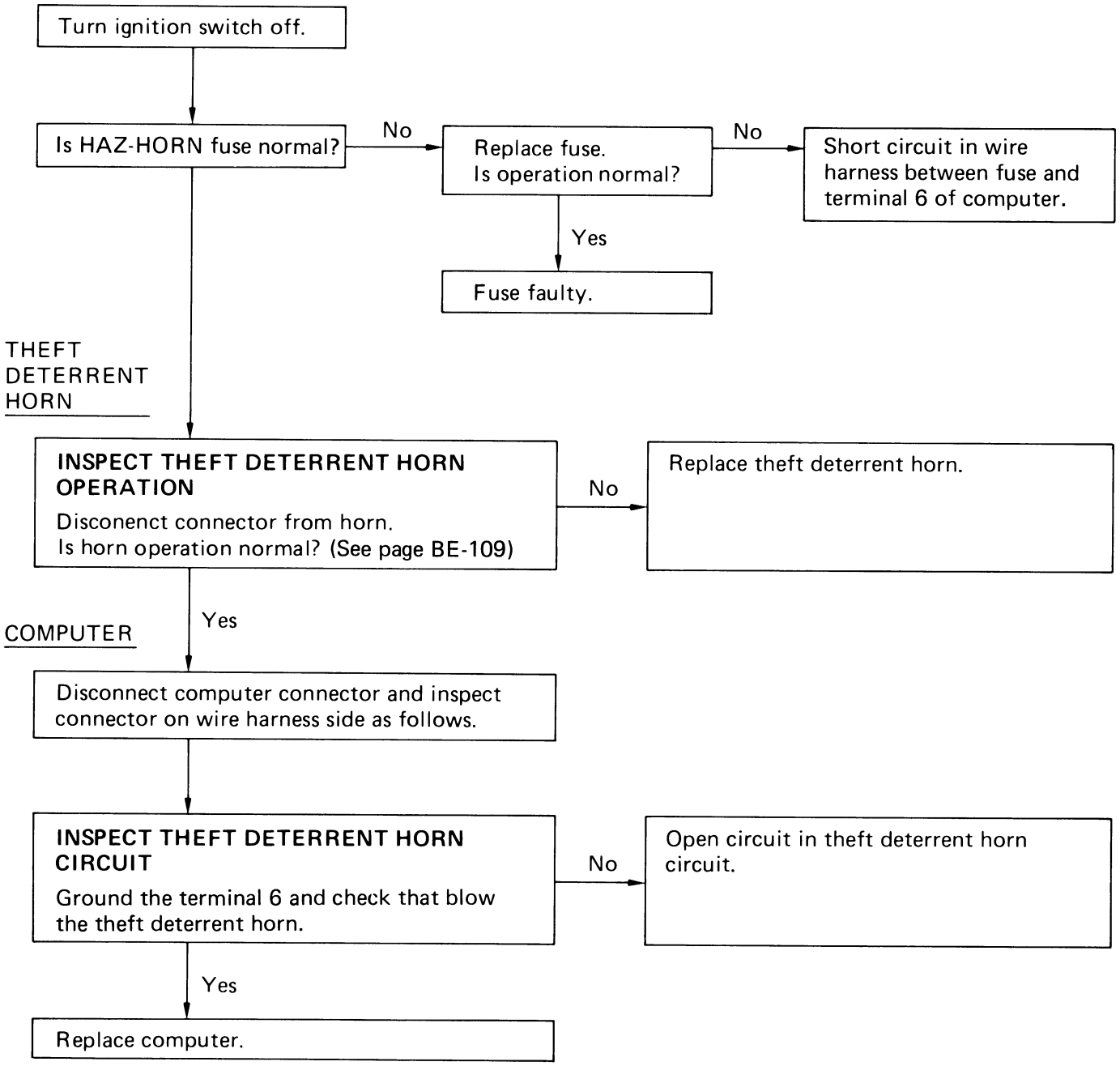

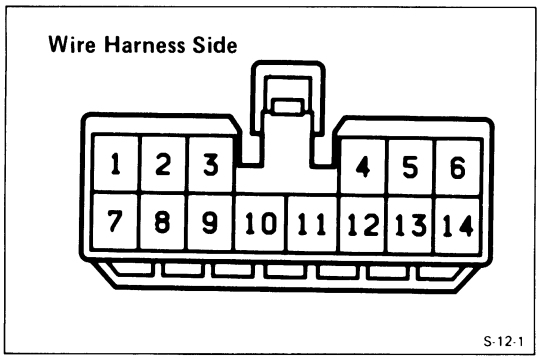

Theft Deterrent Computer

INSPECTION OF THEFT DETERRENT COMPUTER

INSPECT THEFT DETERRENT COMPUTER CIRCUIT

Disconnect the computer and inspect the connector on the wire harness side as shown in the chart below.

Tester Connection	Check Item	Condition		Voltage or Continuity
8 – Ground	Continuity*	RH or LH front door lock knob unlocked		Continuity
		RH and LH front door lock knob locked		No continuity
2 – Ground	Continuity*	Always		Continuity
13 – Ground	Voltage	M/T only	Turn ignition switch ST Depress clutch pedal	Battery voltage
			Turn ignition switch ST Release clutch pedal	No voltage
		A/T only	Turn ignition switch ST	Battery voltage
			Turn ignition switch except ST	No voltage
4 – Ground	Voltage	Turn ignition switch to ON or ACC		Battery voltage
		Turn ignition switch to LOCK		No voltage
14 – Ground	Voltage	Always		Battery voltage
7 – Ground	Continuity	RH or LH front door opened		Continuity
		RH and LH front door closed		No continuity
1 – Ground	Continuity*	Back door or engine hood opened		Continuity
		Back door and engine hood closed		No continuity
3 – Ground	Continuity	RH or LH front door unlocked with key		Continuity
		Except above condition		No continuity
5 – Ground	Continuity	Always		Continuity
10 – Ground	Continuity	Back door unlocked with key		Continuity
		Except the above condition		No continuity
6 – Ground	Voltage	—		Battery voltage
11 – Ground	Continuity	RH or LH front door locked with key		Continuity
		Except above condition		No continuity
12 – Ground	Continuity	Key unlock warning switch ON		Continuity
		Key unlock warning switch OFF		No continuity

*: This circuit includes the LED or diode, if the circuit shows no continuity, change the positive and negative probes and recheck the circuit.

If circuit is correct, replace the theft deterrent computer.

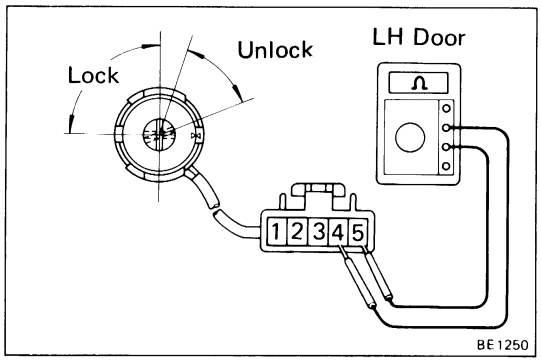

Front Door Key Lock and Unlock Switch

INSPECTION OF SWITCH

INSPECT SWITCH OPERATION

(LH Door)

Terminal / Switch Position	1	2	3	4	5
LOCK			○	○	
NEUTRAL					
UNLOCK				○	○

(RH Door)

Terminal / Switch Position	1	2	3
LOCK		○	○
NEUTRAL			
UNLOCK	○		○

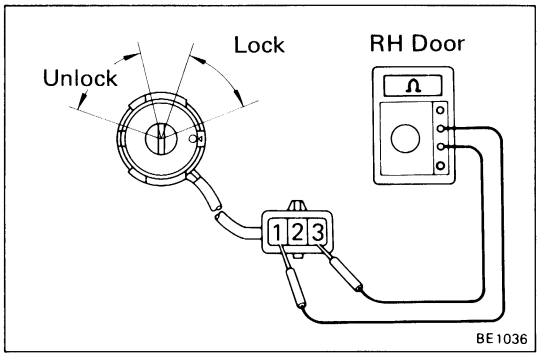

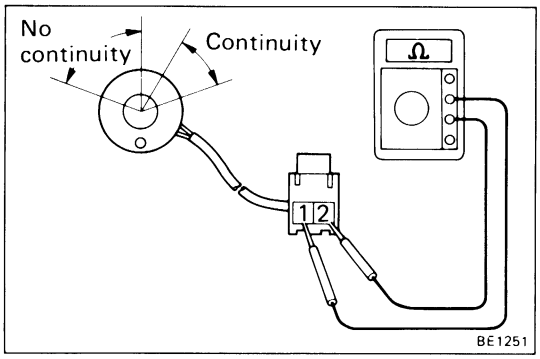

Back Door Key Unlock Switch

INSPECTION OF SWITCH

INSPECT SWITCH OPERATION

(a) Check that there is continuity between terminals 1 and 2 when the switch is turned to the right.

(b) Check that there is no continuity between terminals 1 and 2 when the switch is turned to the left or neutral position.

If operation is not as specified, replace the switch.

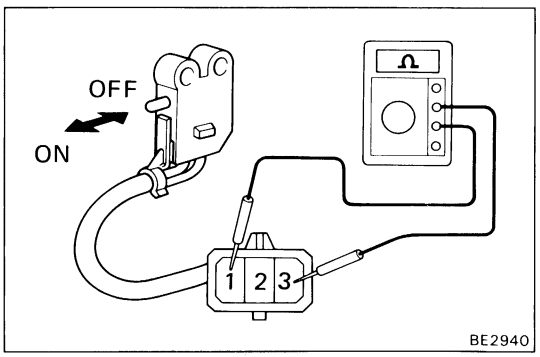

Door Lock Switch

INSPECTION OF SWITCH

INSPECT SWITCH OPERATION

(a) Check that there is continuity between terminals 1 and 3 when the switch is free.

(b) Check that there is no continuity between terminals 1 and 3 when the switch pin is pushed.

If operation is not as specified, replace the switch.

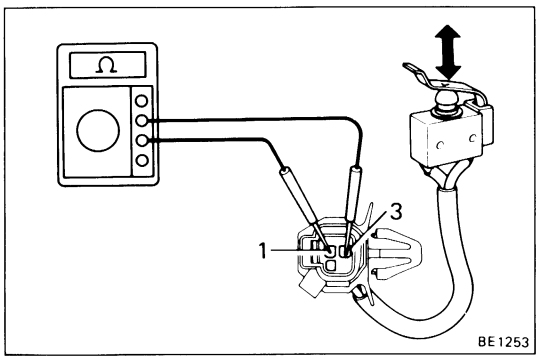

Engine Hood Courtesy Switch

INSPECTION OF SWITCH

INSPECT SWITCH OPERATION

(a) Check that there is continuity between terminals 1 and 3 when the switch is free.

(b) Check that there is no continuity between terminals 1 and 3 when the switch pin is pushed.

If operation is not as specified, replace the switch.

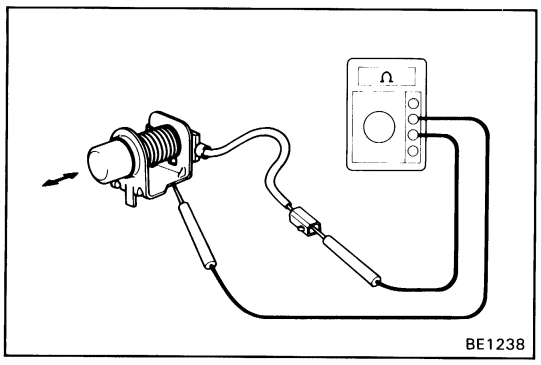

Back Door Courtesy Switch

INSPECTION OF SWITCH

INSPECT SWITCH OPERATION

(a) Check that there is continuity between terminal 1 and ground when the switch is free.

(b) Check that there is no continuity between terminal 1 and ground when the switch pin is pushed.

If operation is not as specified, replace the switch.

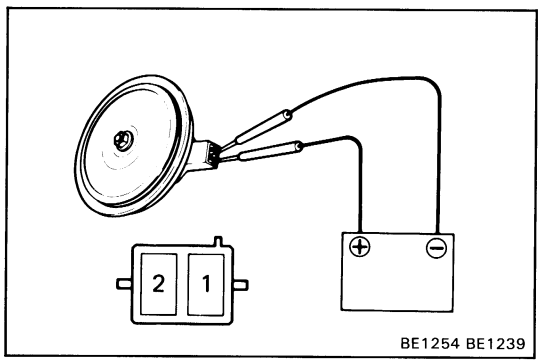

Theft Deterrent Horn

INSPECTION OF HORN

INSPECT HORN OPERATION

(a) Connect the positive (+) lead from the battery to terminal 1 and the negative (−) lead to terminal 2.

(b) Check that the horn blows.

If operation is not as specified, replace the horn.

Door Lock Solenoid

(See page BE-52)

Ignition Switch

(See page BE-15)

Light Retractor Control Relay

(See page BE-23)

Starter Relay

(See page ST-14)

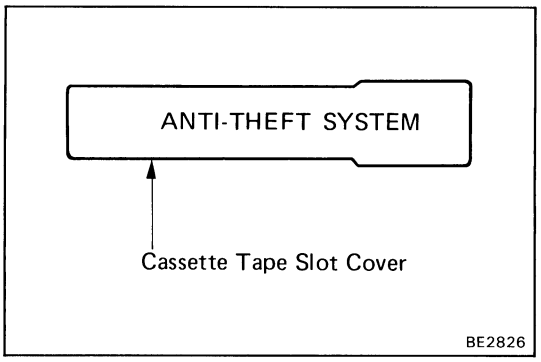

AUDIO SYSTEM

System Description

Anti-Theft System

The anti-theft system is only provided for audio systems equipped with an Acoustic Flavor function.

HINT: The words ''ANTI-THEFT SYSTEM'' are displayed on the cassette tape slot cover.

For operation instructions for the anti-theft system, please consult the audio system section in the Owner's Manual (hereafter called O/M).

1. SETTING SYSTEM

The system is in operation once the customer has pushed the required buttons and entered the customer-selected 3-digit ID number.

(Refer to the O/M section, ''Setting the anti-theft system'')

HINT:

- When the audio system is shipped the ID number has not been input, so the anti-theft system is not in operation.
- If the ID number has not been input, the audio system remains the same as a normal audio system.

2. ANTI-THEFT SYSTEM OPERATION

If the normal electrical power source (connector or battery terminal) is cut off, the audio system becomes inoperable, even if the power supply resumes.

3. CANCELLING SYSTEM

The ID number chosen by the customer is input to cancel the anti-theft system.

(Refer to the O/M section, ''If the system is activated'')

HINT: To change or cancel the ID number, please refer to the O/M section, ''Cancelling the system''.

Troubleshooting

HINT: For audio systems with anti-theft system, troubleshooting items marked (*) indicate that ''Troubleshooting for ANTI-THEFT SYSTEM'' should be carried out first.

No.	Problem		
1.	DEAD RADIO AND TAPE PLAYER	*(a)	No power to radio or tape player, or power but no sound.
		(b)	Tape player okay but no sound from AM and FM or either one.
		(c)	No sound from one speaker.
2.	FAINT RECEPTION	—	———
3.	BAD SOUND QUALITY	(a)	Sound quality bad when radio played.
		(b)	Sound quality bad when tape player played.
4.	DEFECTIVE AUTO-SEARCH MACHANISM	—	———
	Troubleshooting for CD player		See page BE-104

Troubleshooting for ANTI-THEFT SYSTEM

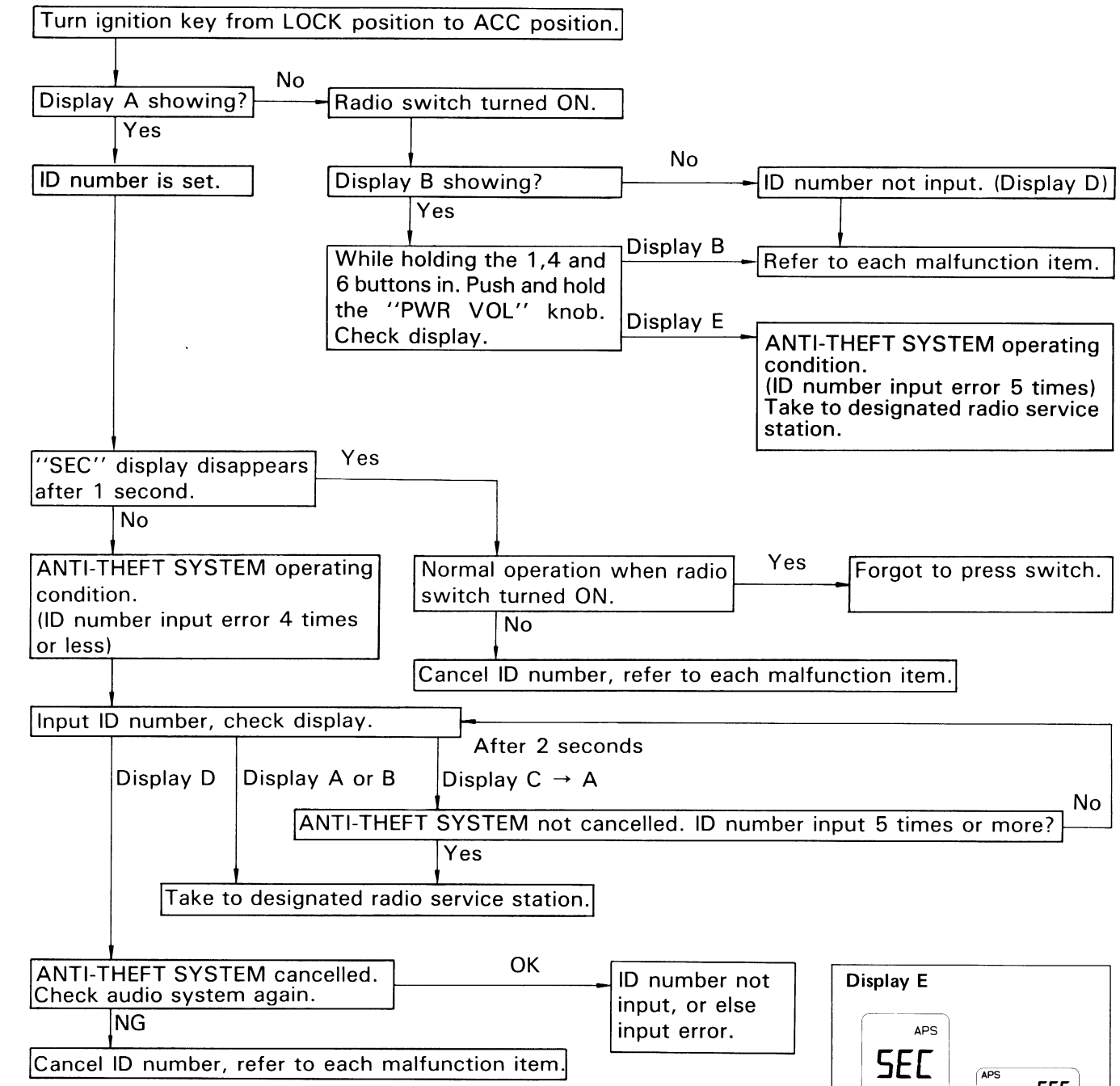

Display E

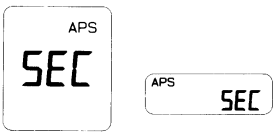

2 DIN Type 1 DIN Type

BE3922 BE3923

(Liquid Crystal Display (LCD) for Audio System)

Display A

2 DIN Type 1 DIN Type

BE2810 BE2814

Display B

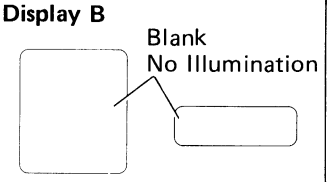

2 DIN Type 1 DIN Type

BE2811 BE2815

Display C

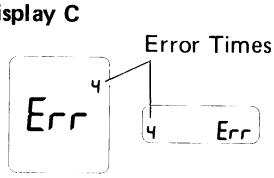

2 DIN Type 1 DIN Type

BE2812 BE2816

Display D Example:

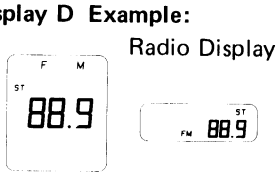

2 DIN Type 1 DIN Type

BE2813 BE2817

HINT:

- Refer to O/M for operation details of ANTI-THEFT SYSTEM.
- When the ID number has been cancelled, reset the same number after completing the operation, or inform the customer that it has been cancelled.

DESCRIPTION OF SYMBOLS

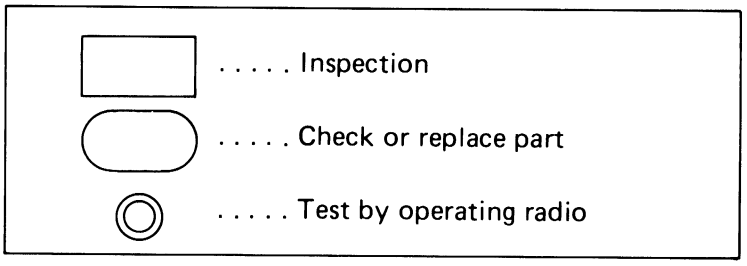

1. DEAD RADIO AND TAPE PLAYER

(a) No power to radio or tape player, or power but no sound.

Possible causes:

- Blown DOME fuse
- Short circuit or broken wire in power source wire harness
- Loose connectors behind radio and tape player
- Loose speaker connector
- Defective speaker
- Broken wire in speaker wire harness
- Improperly installed radio or tape player
- Defective radio or tape player

TEST 1

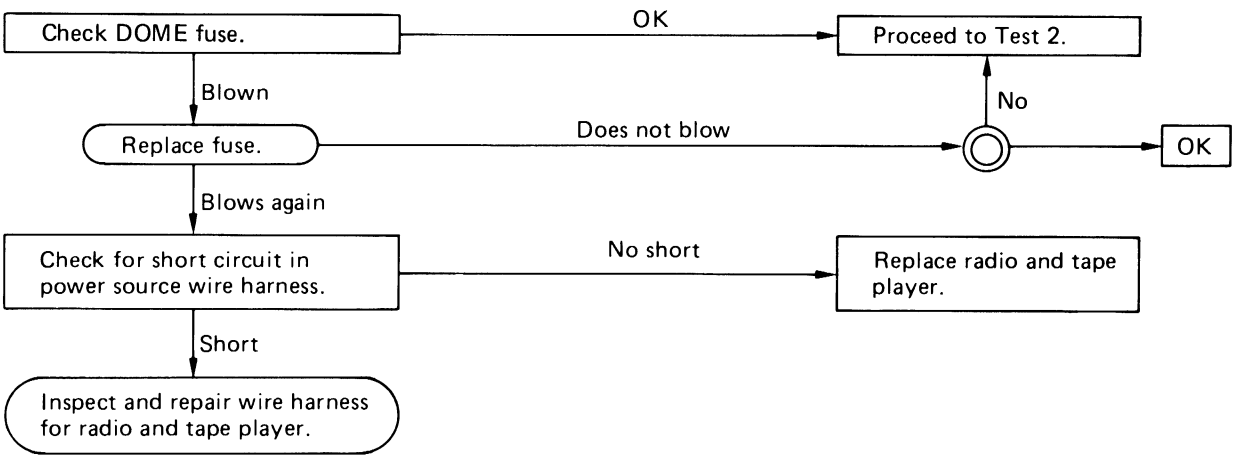

TEST 2

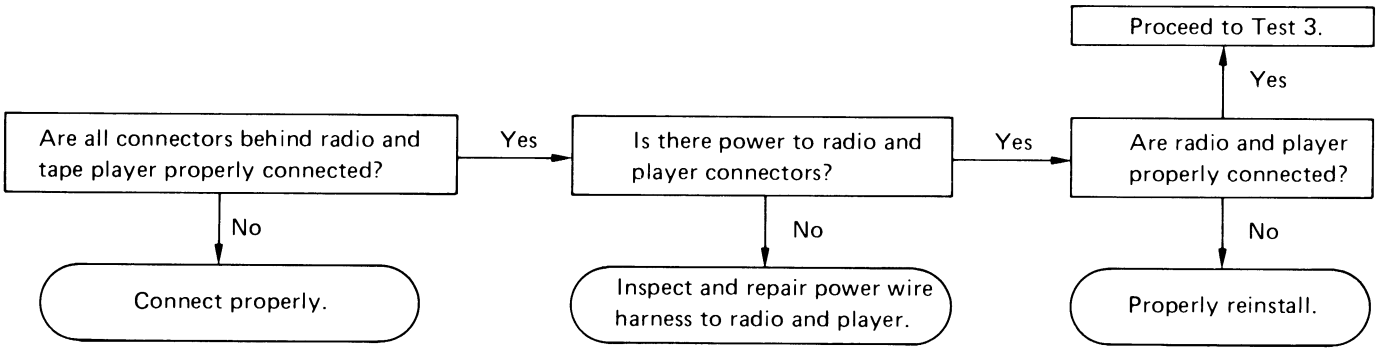

TEST 3

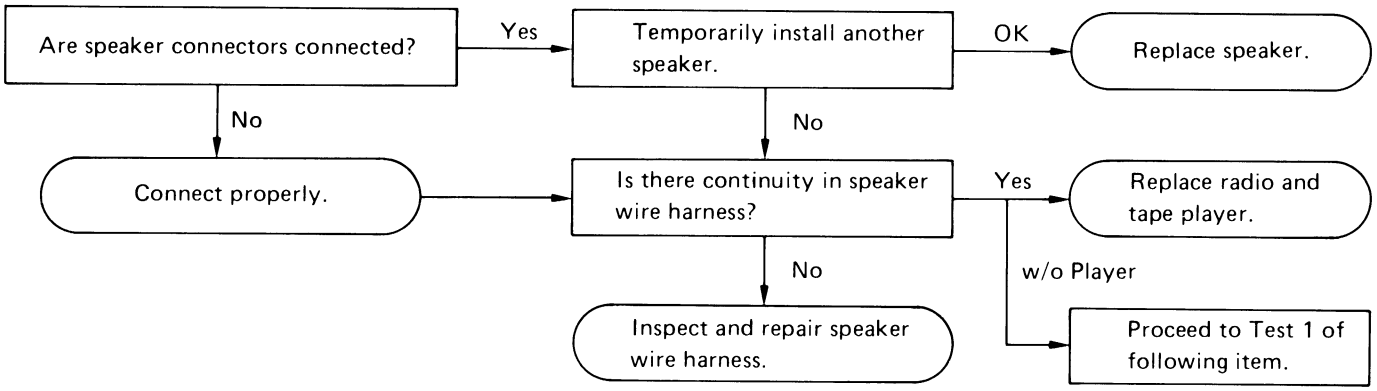

(b) Tape player okay but no sound from either the AM or FM band.

Possible causes:

- Antenna disconnected
- Antenna plug not properly connected
- Defective antenna
- Defective antenna cable
- Defective radio or tape player
- Blown RADIO fuse
- Short circuit or broken wire in wire harness for back-up power source

TEST 1

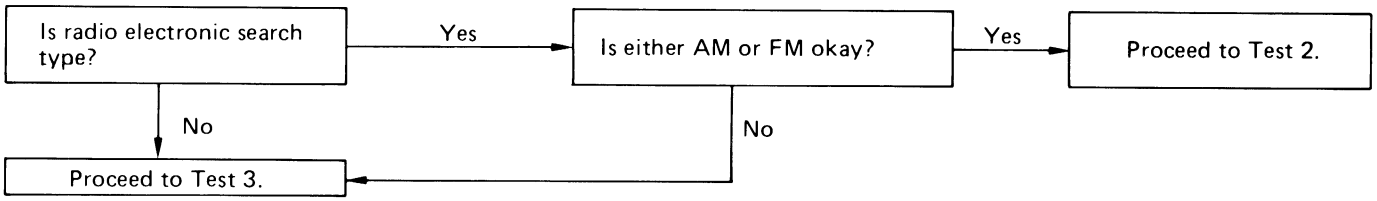

TEST 2

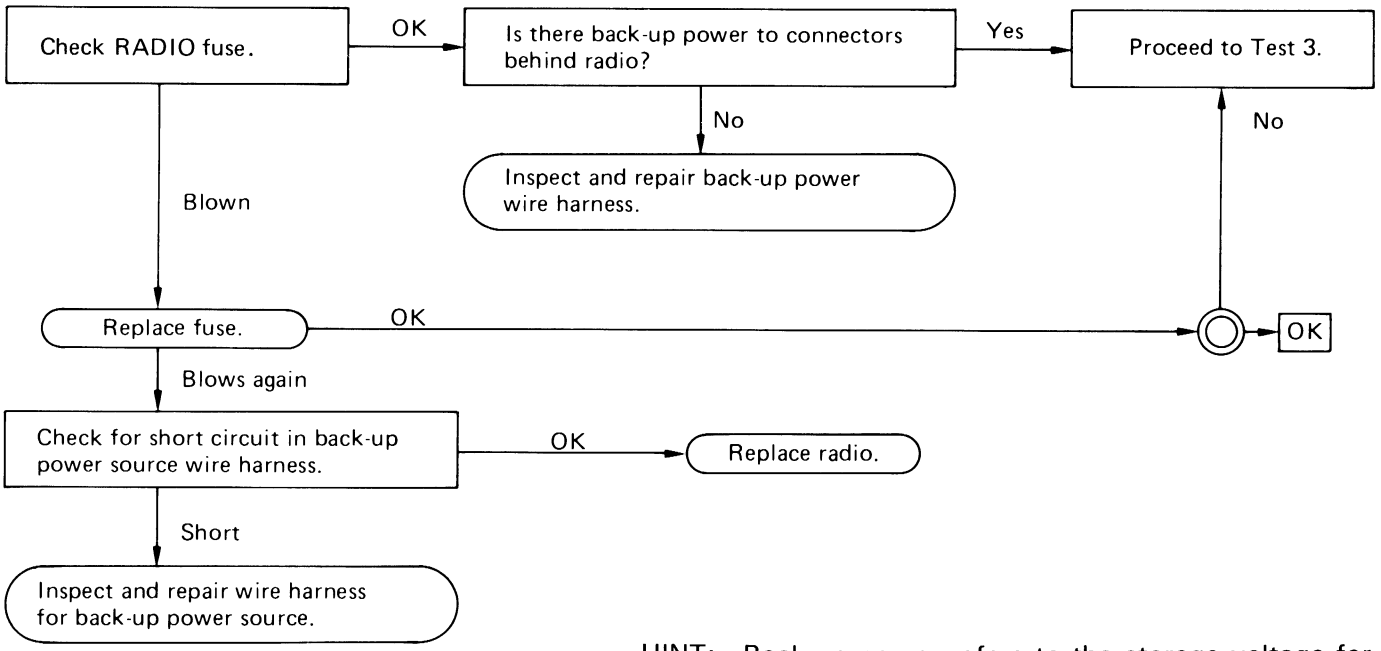

HINT: Back-up power refers to the storage voltage for preset tuning. This is applied even when the ignition switch is OFF.

TEST 3

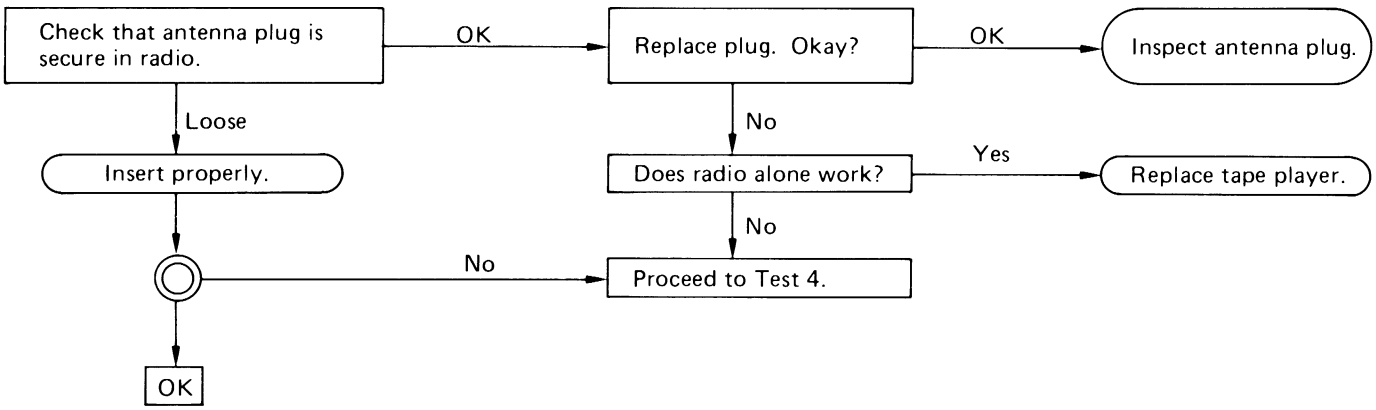

TEST 4

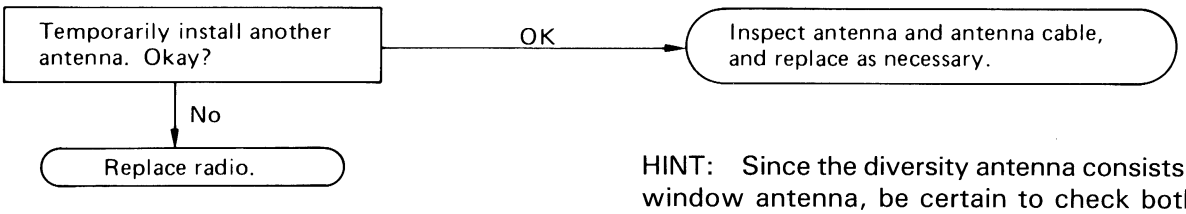

HINT: Since the diversity antenna consists of the pale and window antenna, be certain to check both.

(c) No sound from one speaker.

Possible causes:

- Loose speaker connector
- Broken wire in speaker wire harness
- Defective speaker
- Defective radio and tape player

TEST 1

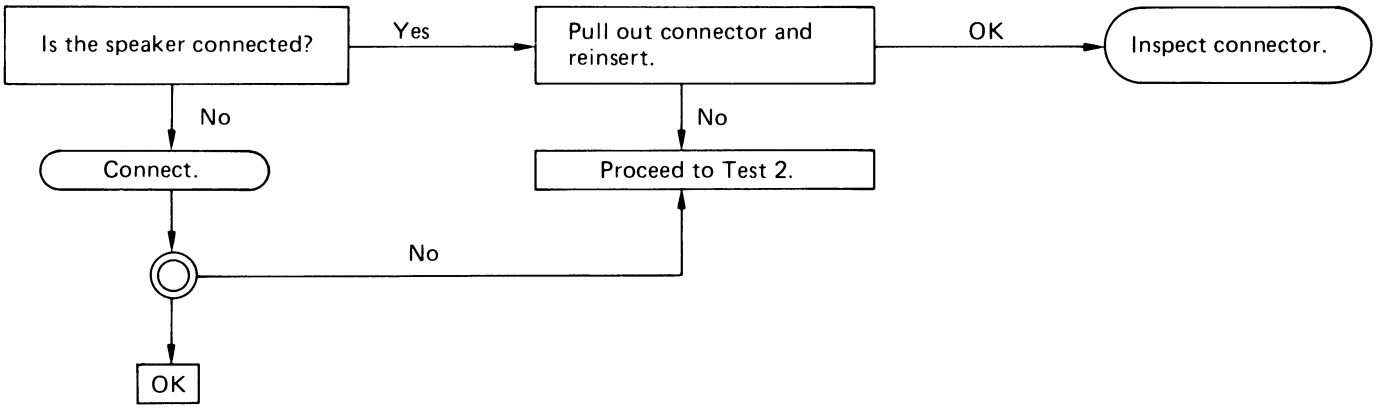

TEST 2

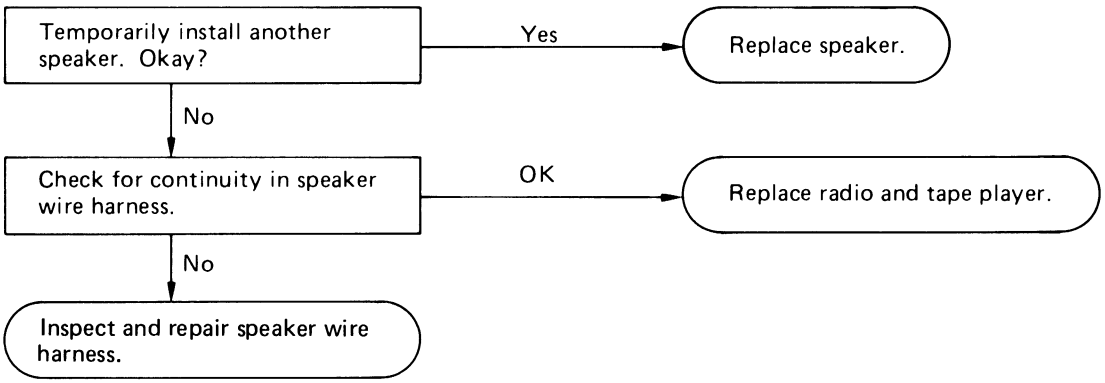

2. FAINT RECEPTION

Possible causes:

- Defective antenna or antenna cable
- Defective speaker
- Defective radio

TEST

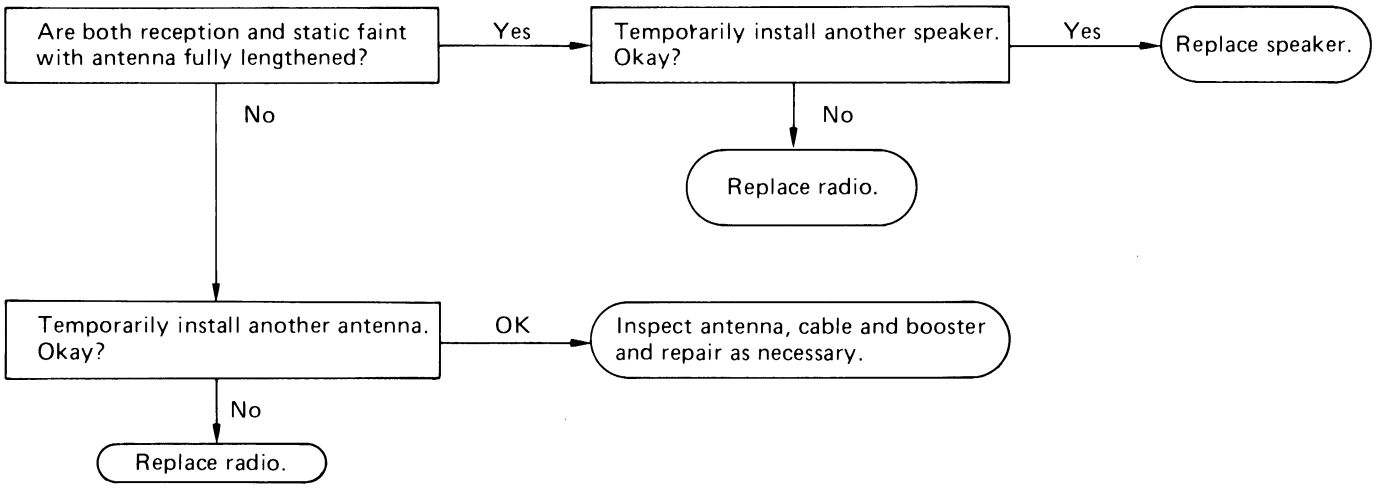

3. BAD SOUND QUALITY

(a) Sound quality bad when radio played.

Possible causes:

- Multipath interference of excessive interception
- Tuner dial not synchronized with station
- Defective antenna or antenna cable
- Speaker improperly installed
- Vibration sound from components near speaker
- Defective speaker
- Defective radio

TEST 1

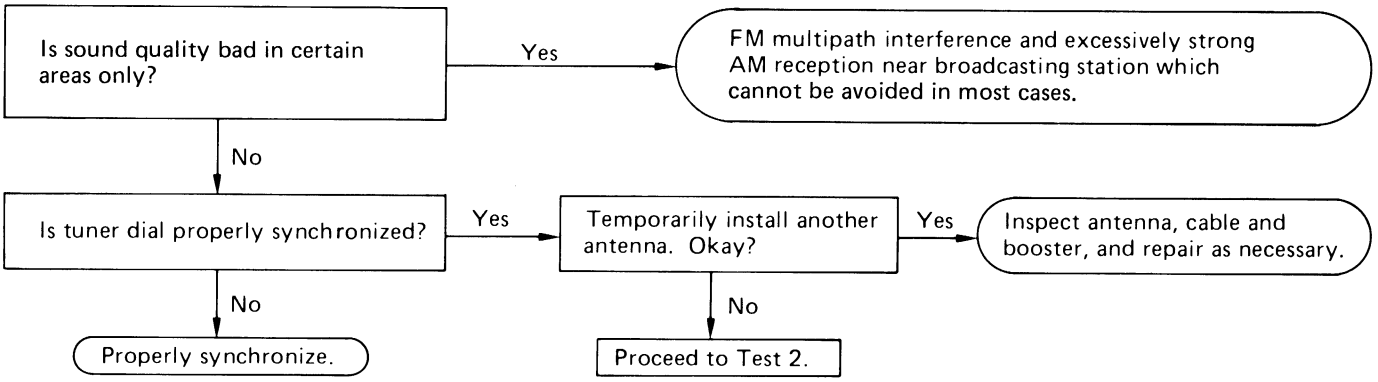

TEST 2

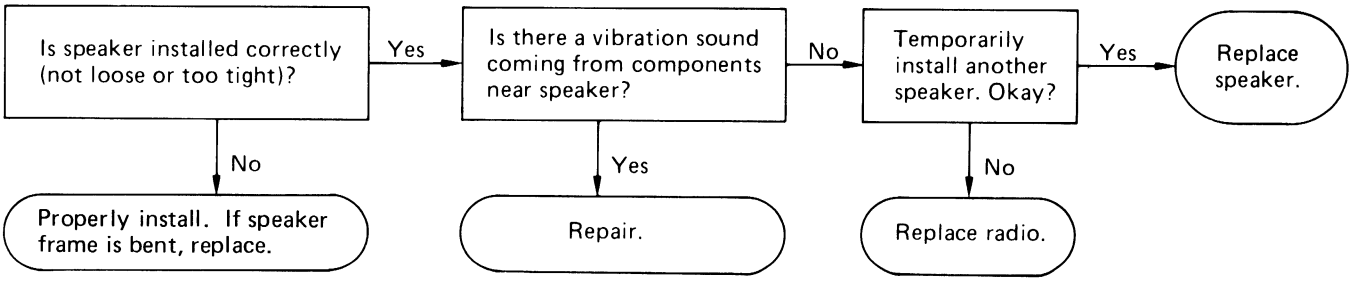

HINT: FM distortion tends to increase sharply if the tuner is not synchronized.

(b) Sound quality bad when tape player played.
Possible causes:
- Bad tape
- Dirty head
- Incorrectly installed speaker
- Vibration noise from around speaker
- Defective speaker
- Defective tape player

TEST 1

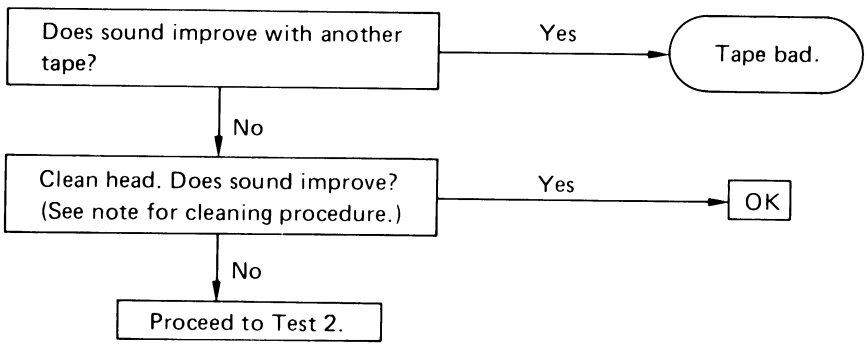

TEST 2

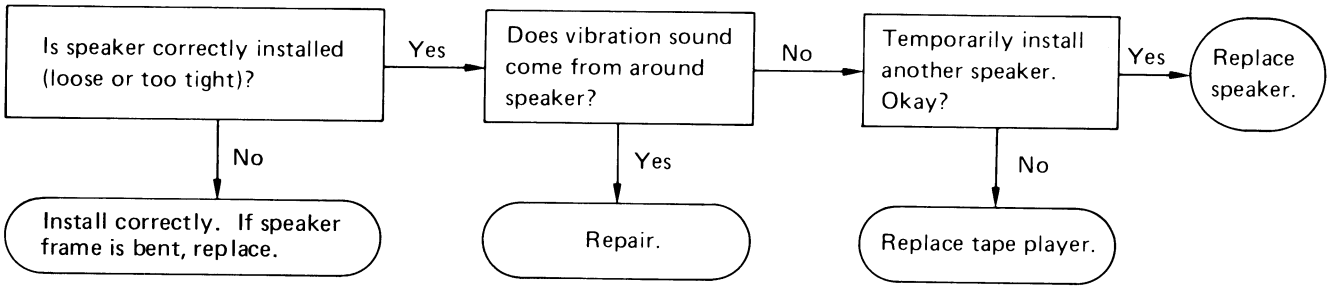

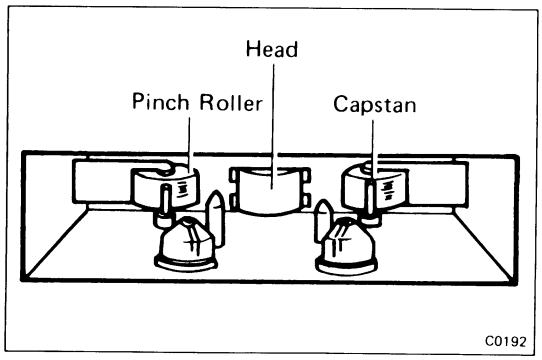

HINT: Head cleaning procedure.

(1) Raise the cassette door with your finger. Next, using a pencil or like object, push in the guide as shown.

(2) Using a cleaning pen or cotton applicator soaked in alcohol, clean the head surface, pinch rollers and capstans.

(3) Push in the "eject" button.

4. DEFECTIVE AUTO SEARCH MECHANISM

Manual search possible but automatic search mechanisum does not function or does not stop at all receivable stations.

Possible causes:

- Poor search sensitivity (SENS button)
- Defective radio

TEST

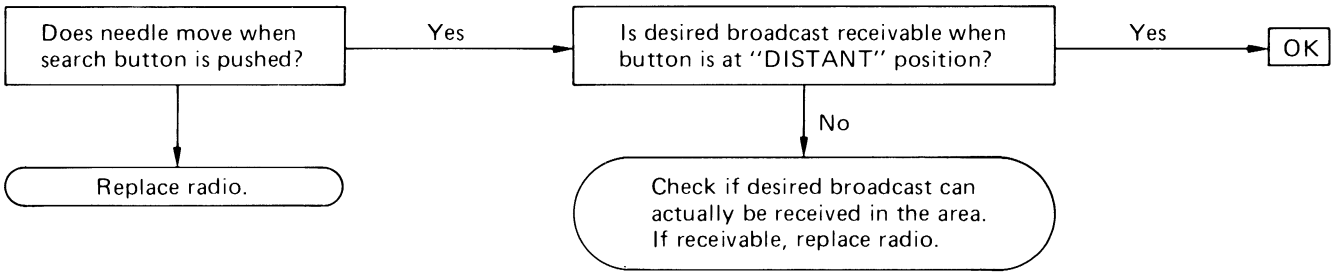

Antenna Motor Control Relay

INSPECTION OF RELAY

1. INSPECT RELAY OPERATION (ANTENNA UP)

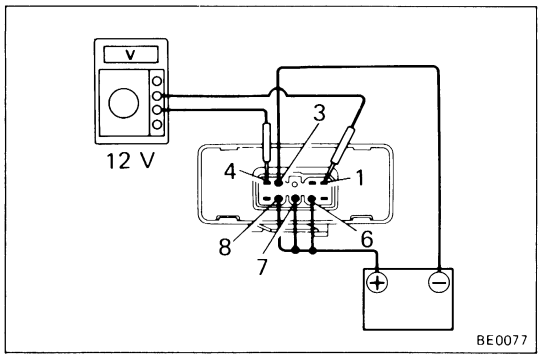

(a) Connect the voltmeter positive (+) lead to terminal 1 and the negative (−) lead to terminal 4.

(b) Connect the positive (+) lead from the battery to terminals 6, 7 and 8 and the negative (−) lead to terminal 3.

(c) Check that there is battery voltage.

HINT: Measure the voltage within 7 seconds after connecting the positive (+) lead from the battery to terminal 8.

2. INSPECT RELAY OPERATION (ANTENNA DOWN)

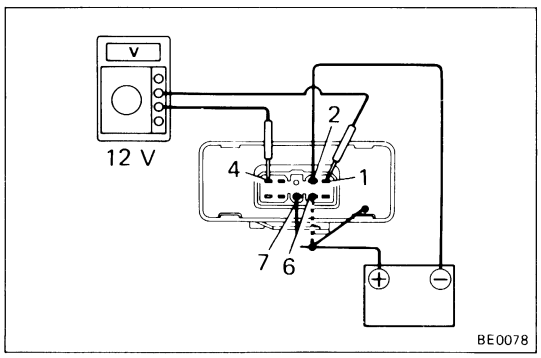

(a) Connect the voltmeter positive (+) lead to terminal 4 and the negative (−) lead to terminal 1.

(b) Connect the positive (+) lead from the battery to terminals 6 and 7 and the negative (−) lead to terminal 2.

(c) Disconnect the positive (+) lead from the battery to terminal 6.

(d) Check that there is battery voltage.

HINT: Measure the voltage within 7 seconds after disconnecting the positive (+) lead from the battery to terminal 6.

3. INSPECT RELAY OPERATION (ANTENNA STOP)

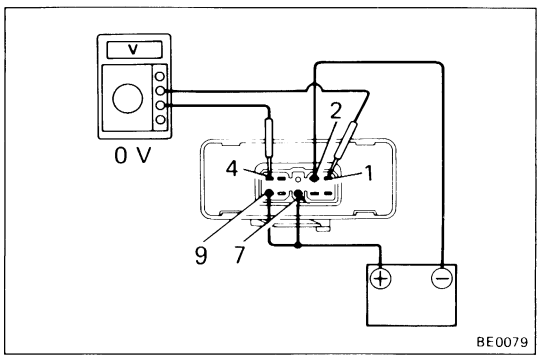

(a) Connect the voltmeter positive (+) lead to terminal 1 and the negative (−) lead to terminal 4.

(b) Connect the positive (+) lead from the battery to terminals 7 , 9 and the negative (−) lead to terminal 2.

(c) Check that there is no battery voltage.

If operation is not as specified, replace the relay.

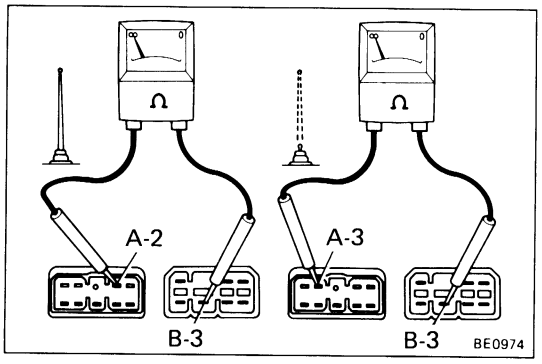

Antenna Motor

INSPECTION OF ANTENNA MOTOR

INSPECT LIMIT SWITCH OPERATION

(a) If the motor stops with the antenna up, check that there is no continuity between terminals A-2 and B-3.

(b) If the motor stops with the antenna down, check that there is no continuity between terminals A-3 and B-3.

(CD Player)

Troubleshooting

HINT: Never attempt to disassemble or oil any part of the player unit. Do not insert any object other than a disc into the slot.

Remember there are no user-serviceable parts inside.

NOTICE: Compact Disc players use invisible laser beam which could cause hazardous radiation exposure if directed. Be sure to operate the player correctly as instructed.

Check that the operation of other audio system (Radio, Cassette etc.) are normal.

Problem	Section
*CD can not be inserted	A
*Does not play	B
Sound jumps	C
Bad sound quality	D
CD will not eject	E

HINT: For audio systems with anti-theft system, troubleshooting items marked (*) indicate that ''Troubleshooting for ANTI-THEFT SYSTEM'' should be carried out first.

A CD can not be inserted

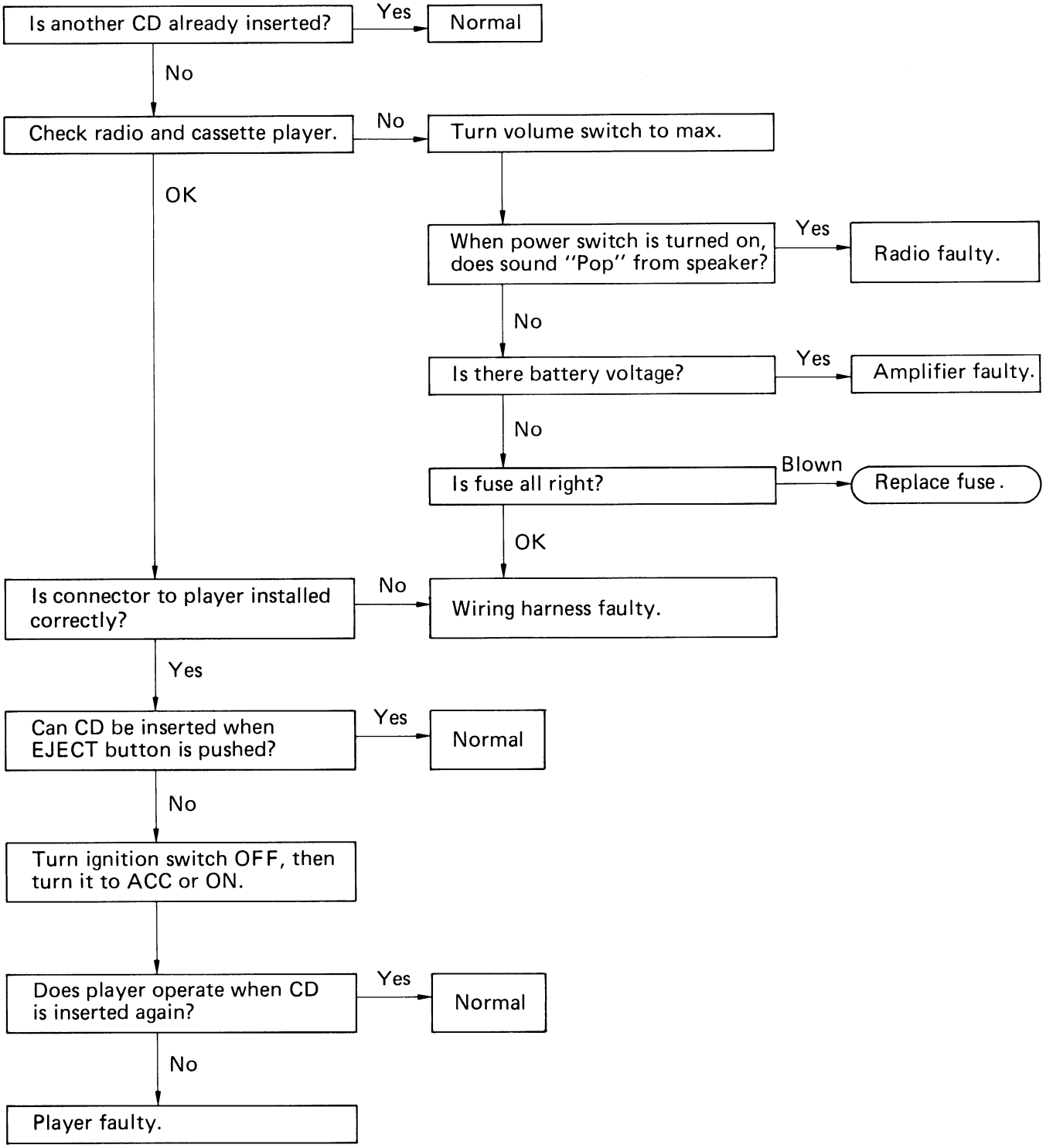

B Does not play

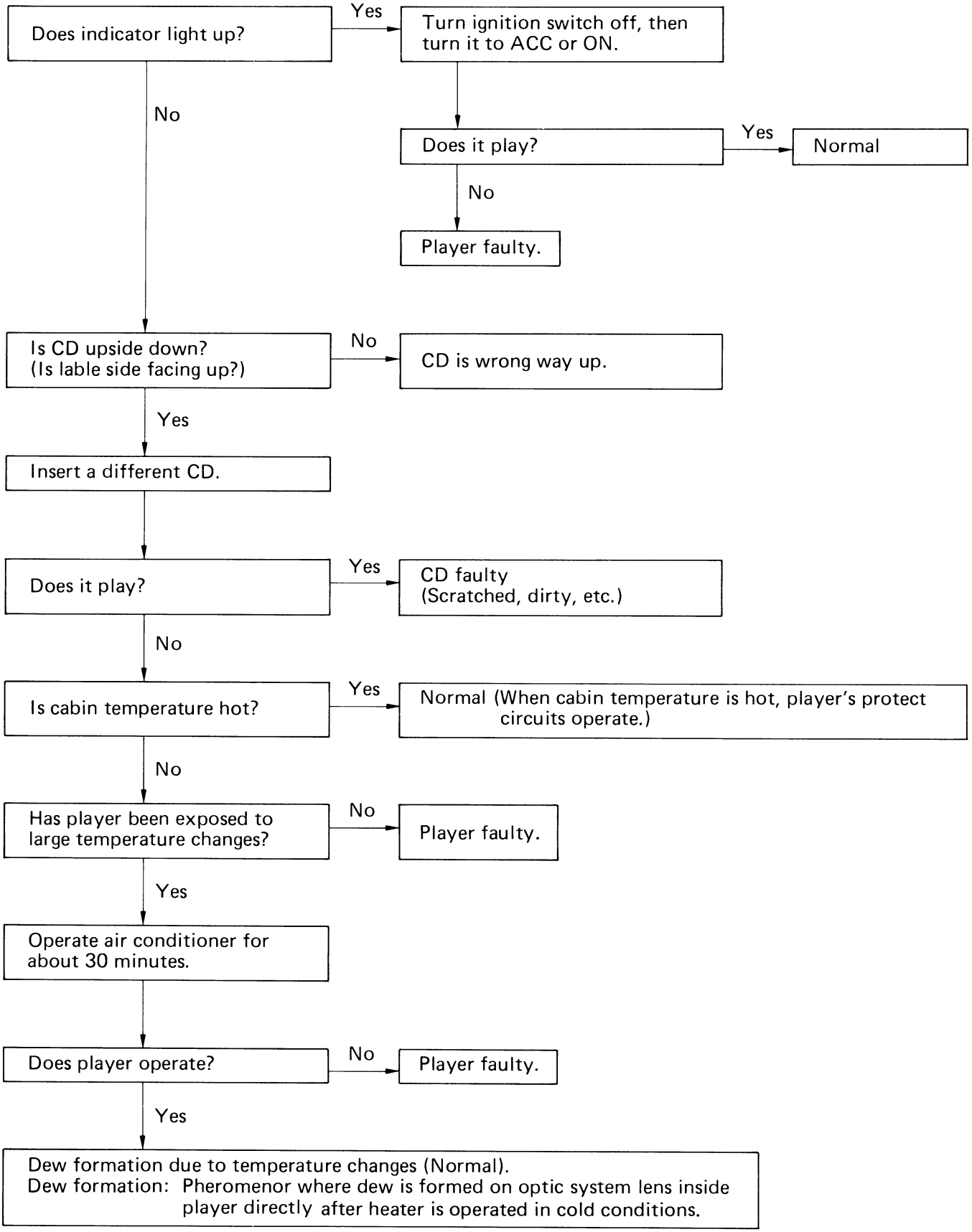

C Sound jumps

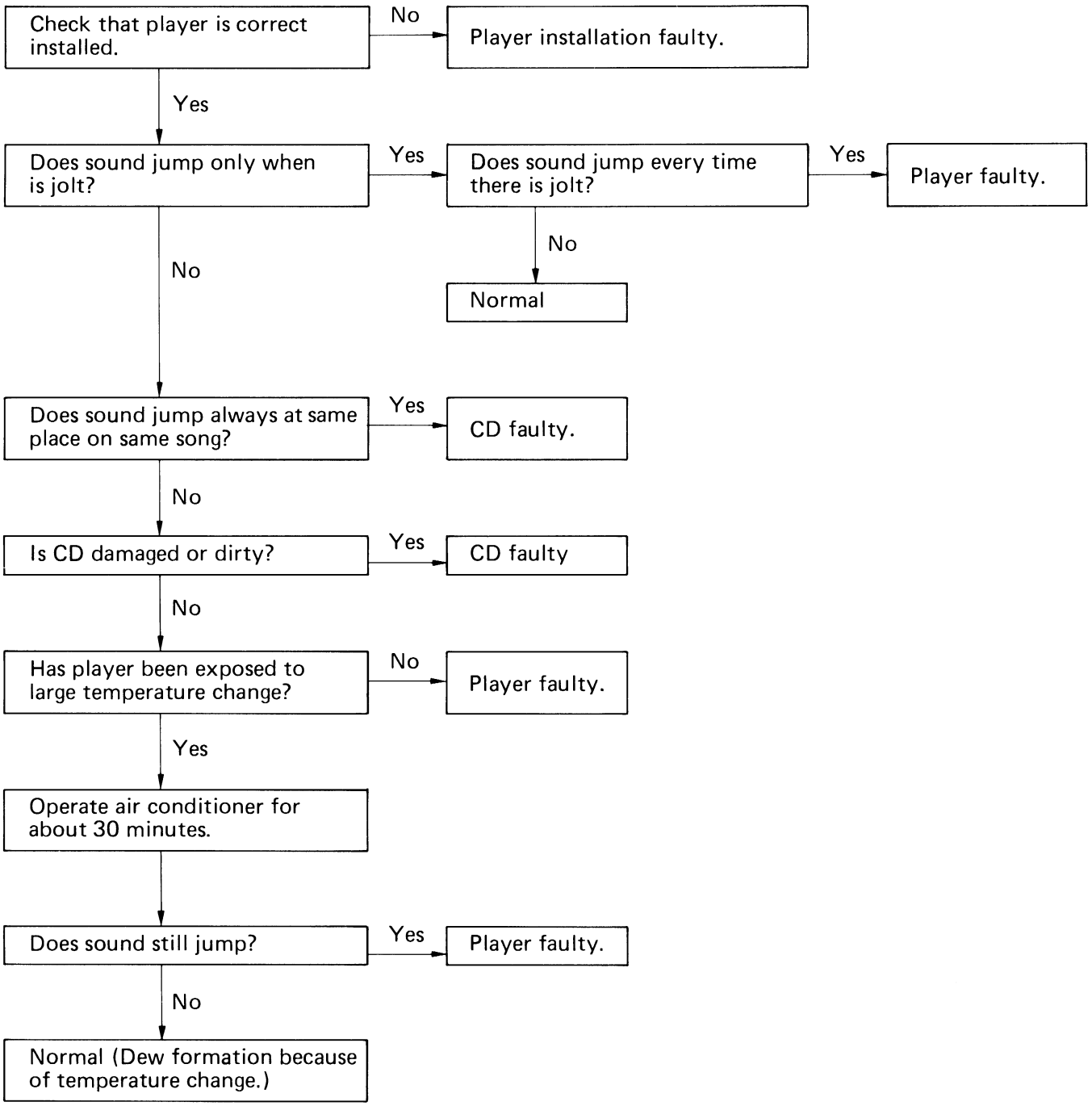

D Bad Sound Quality

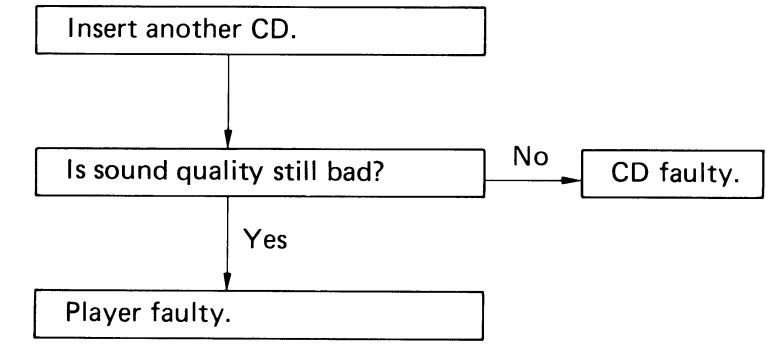

E CD will not eject

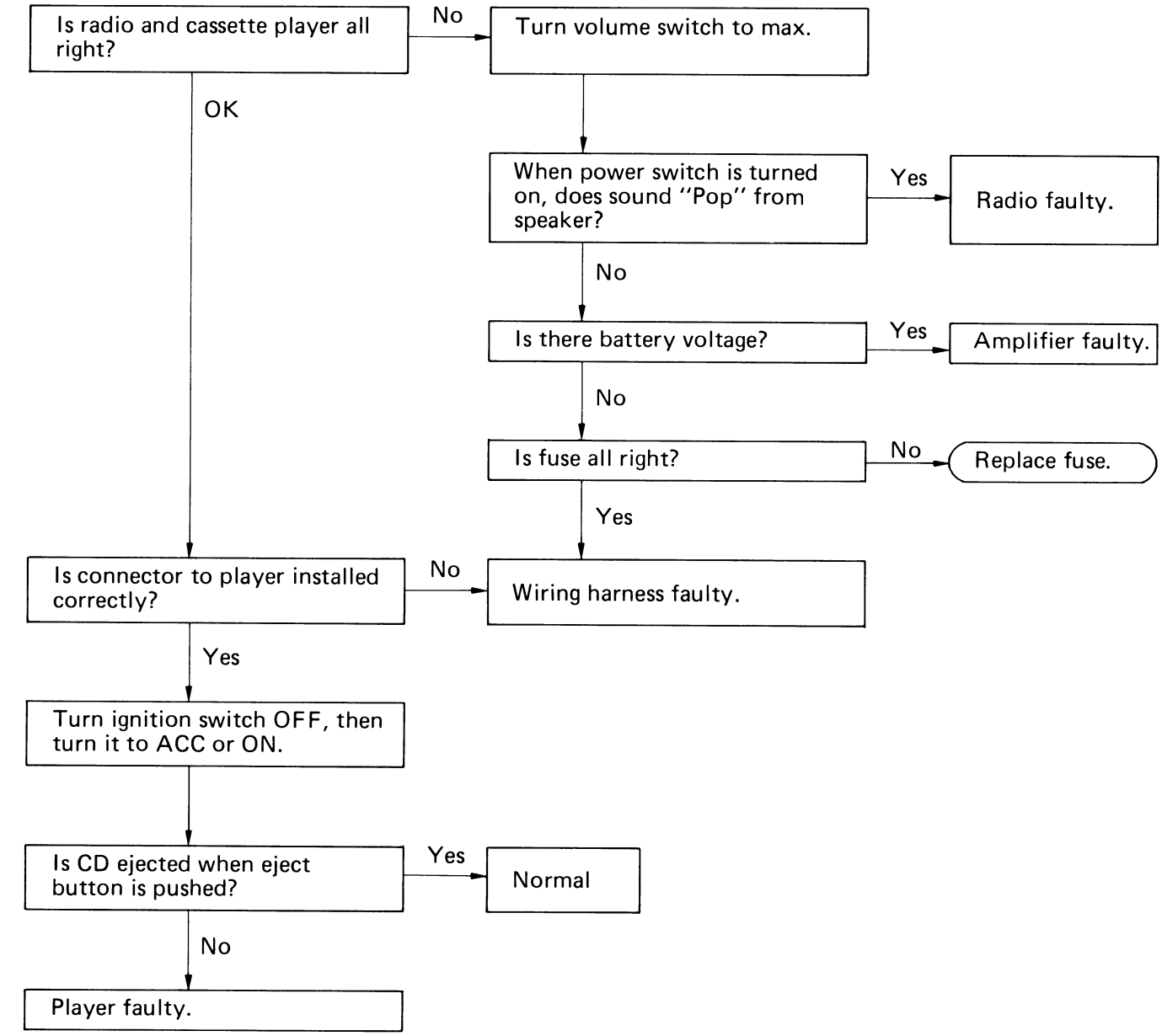

CLOCK

Troubleshooting

CLOCK WILL NOT OPERATE

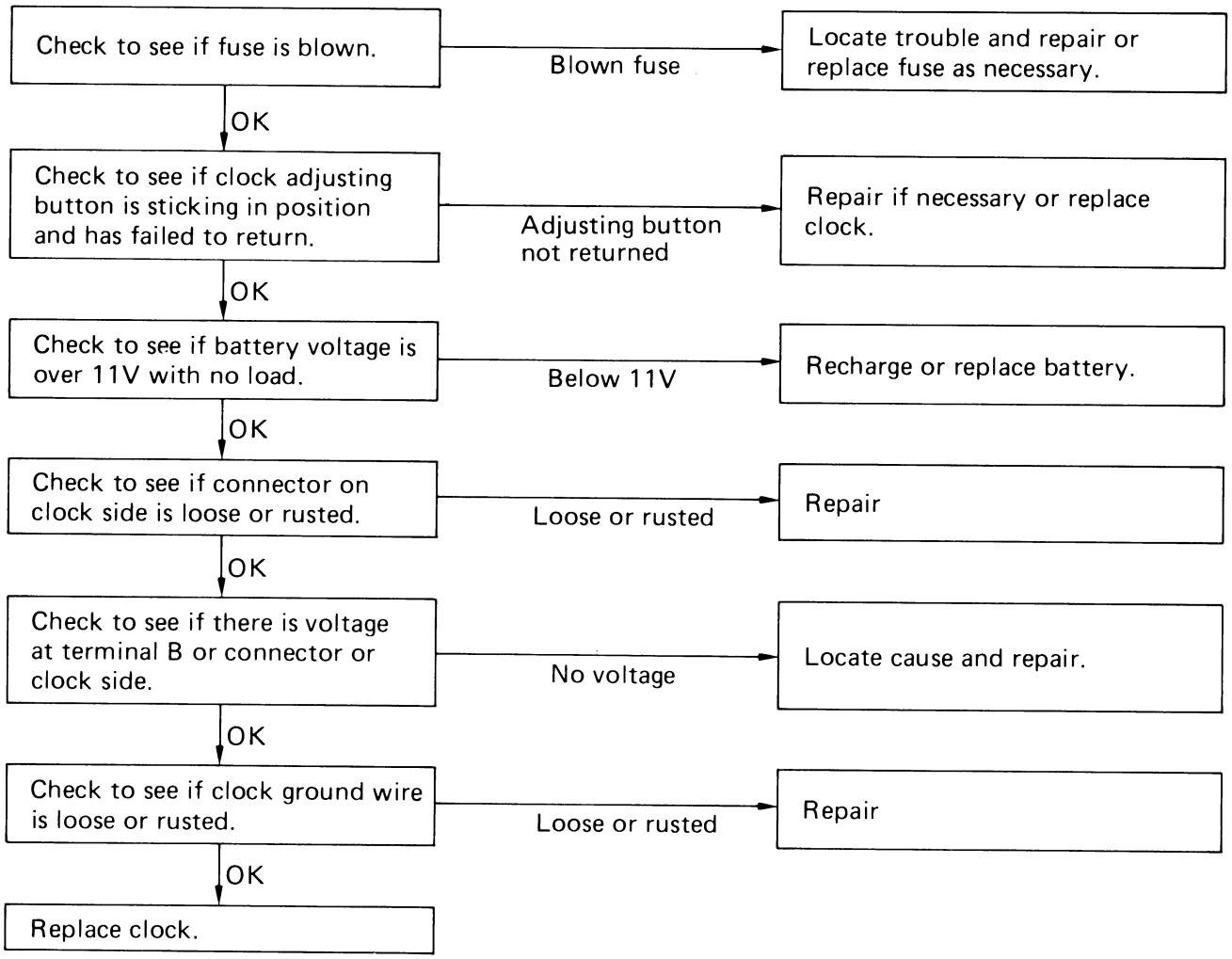

CLOCK LOSES OR GAINS TIME

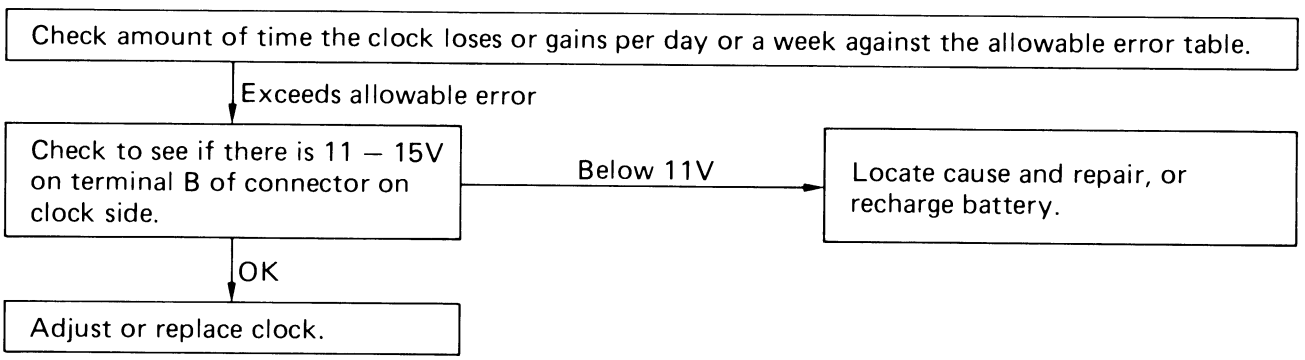

1. **INSPECT ALLOWABLE ERROR OF CLOCK**

Check the allowable error of the clock

Allowable error (per day): ± 1.5 seconds

2. **ADJUSTMENT OF CLOCK**

Adjustment of the quartz clock requires a precise digital counter. Adjustment must be made in shop specified by the manufacturer.

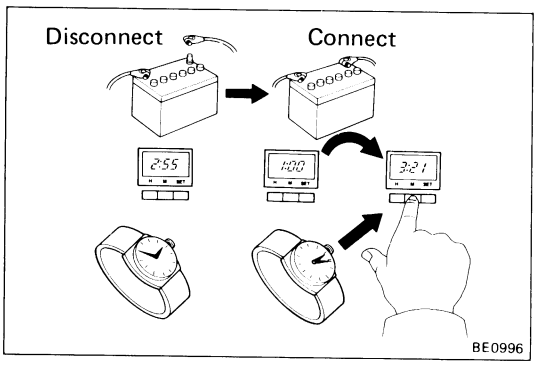

3. **STARTING OF CLOCK**

(a) Connect the battery terminal.

(b) Check the clock to see that it is running, and then set it to the correct time.

HINT: Whenever the battery terminal is disconnected, make sure to set the clock to the correct time after reconnecting the battery.

BODY

	Page
GENERAL INFORMATION	BO-2
HOOD	BO-3
HEADLIGHT	BO-4
FRONT DOOR	BO-5
BACK DOOR	BO-16
MOULDING	BO-17
WINDSHIELD	BO-31
QUARTER WINDOW GLASS	BO-37
BACK DOOR GLASS	BO-41
SPORT ROOF	BO-43
SAFETY PAD	BO-50
SEAT	BO-58
SEAT BELT	BO-61
BODY DIMENSIONS	BO-63

GENERAL INFORMATION

If there is a possibility the body and/or parts may be damaged, first remove the danger before performing repair operations.

Example:

1. Apply protection tape to the body adjustment to the body part when removing and installing.

Example

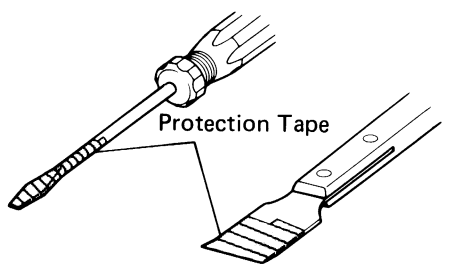

BO2488

2. When prying off the body parts with a screwdriver or scraper etc., be sure to apply protection tape to the tip or blade to prevent damage to the paint film or body part.

Example

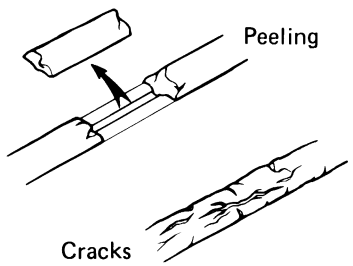

BO2489

If anti-rust agents are dameged while repairing other parts, be sure to repair the anti-rust agent.

Example:

1. If body sealant, paint film or undercoat are damaged by peeling, cracks, etc., be sure to repair each with anti-rust agent.

Example

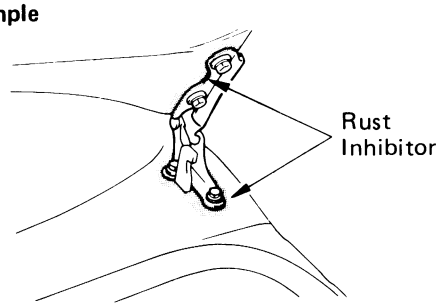

BO2490

2. If a hinge or exterior body panel is loosened or removed, be sure apply rust inhibitor after repairs.

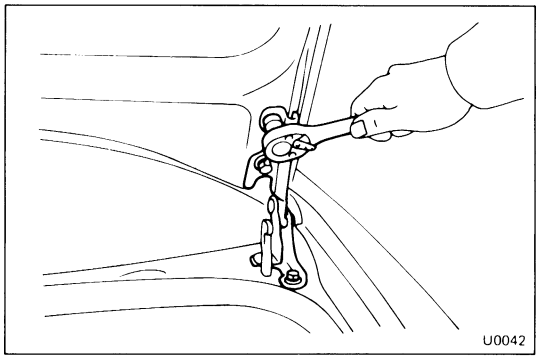

HOOD

ADJUSTMENT OF HOOD

1. **ADJUST HOOD IN FORWARD/REARWARD AND LEFT/RIGHT DIRECTIONS**

   Adjust the hood be loosening the hood side hinge bolts.

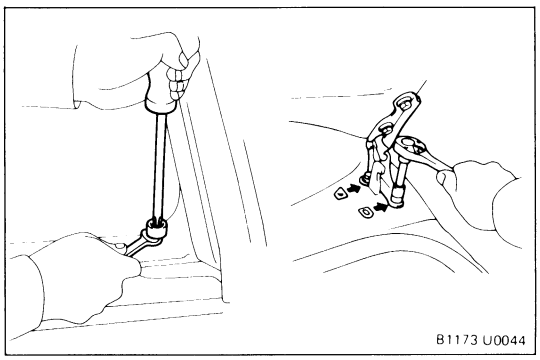

2. **ADJUST FRONT EDGE OF HOOD IN VERTICAL DIRECTION**

   Adjust the hood by turning the cushions.

3. **ADJUST REAR EDGE OF HOOD IN VERTICAL DIRECTION**

   Adjust the hood by increasing or decreasing the number of the washers.

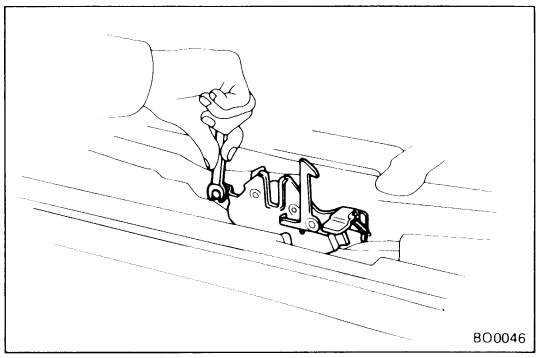

4. **ADJUST HOOD LOCK**

   Loosen the mounting bolts to adjust.

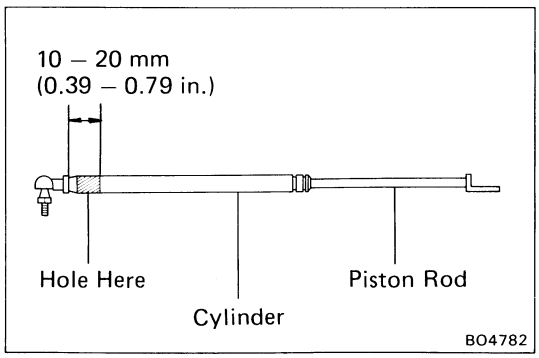

Hood Damper Stay

NOTICE: Handling the damper.

(a) Do not disassemble the damper because the cylinder is filled with pressurized gas.

(b) If the damper is to be replaced, drill a 2.0 – 3.0 mm (0.079 – 0.118 in.) hole in the bottom of the removed damper cylinder to completely release the high-pressure gas before disposing of it.

(c) When drilling, chips may fly out so work carefully.

(d) The gas is colorless, odorless and non-toxic.

(e) When working, handle the damper carefully. Never score or scratch the exposed part of the piston rod, and never allow paint or oil to get on it.

(f) Do not turn the piston rod and cylinder with the damper fully extended.

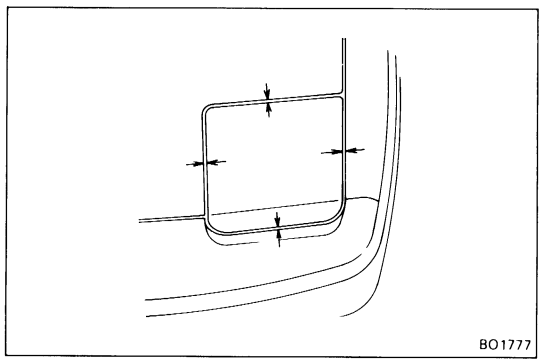

HEADLIGHT

NOTICE: When adjusting each section, raise or lower the headlight with the light control switch. But when adjusting each section, be sure to remove the RTR fuse (30A) before adjusting.

ADJUSTMENT OF HEADLIGHT

1. **ADJUST HEADLIGHT COVER FORWARD/REARWARD AND LEFT/RIGHT DIRECTION**

   Adjust the headlight cover by loosening the cover set screws.

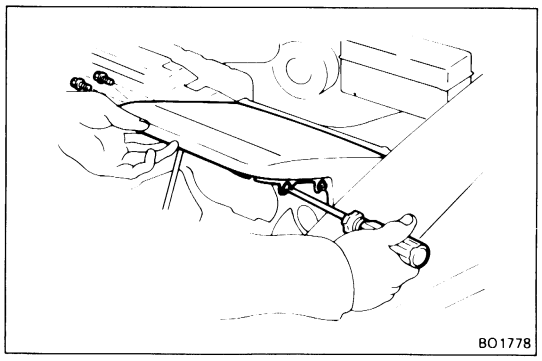

2. **ADJUST HEADLIGHT SLANT**

   (a) Loosen the stopper lock nut.

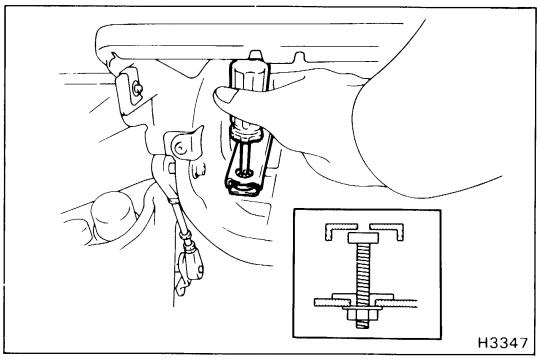

   (b) Lower the headlight.

   (c) Turn the manual operation knob to align the rod and the motor link.

   (d) Change the rod length to adjust the headlight slant.

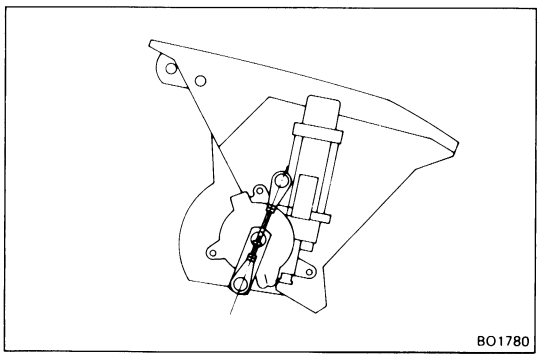

3. **ADJUST HEADLIGHT STOPPER POSITION**

   (a) Raise the headlight.

   (b) Turn the stopper counterclockwise until it touches the headlight bracket, then turn it another 4/5 turn counterclockwise.

   (c) Tighten the stopper lock nut.

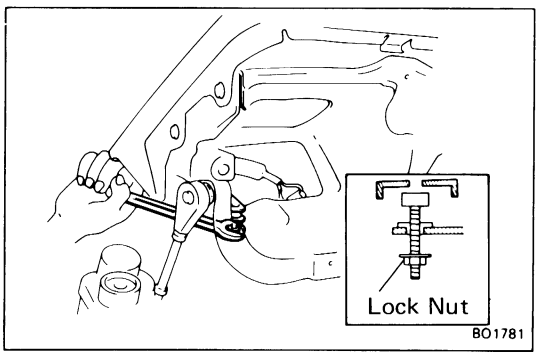

FRONT DOOR

COMPONENTS

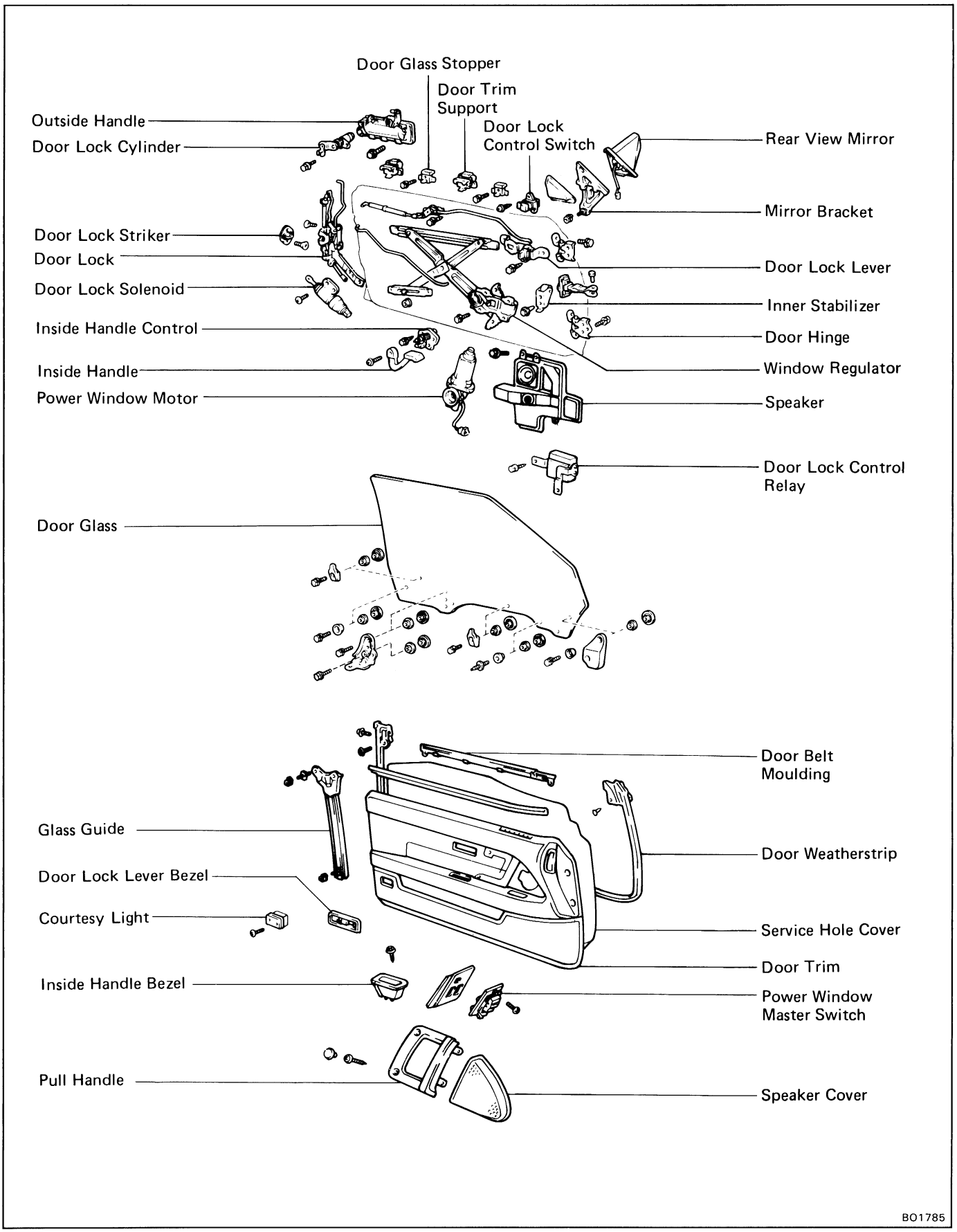

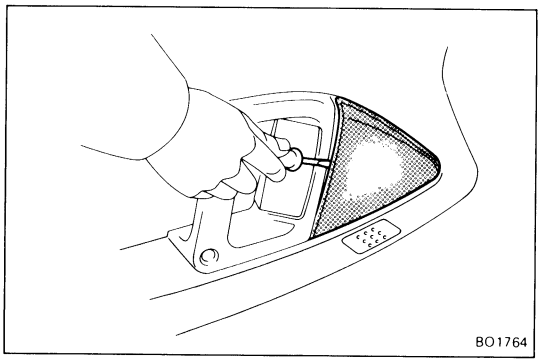

DISASSEMBLY OF FRONT DOOR

1. REMOVE SPEAKER COVER

2. REMOVE PULL HANDLE WITH POWER WINDOW MASTER SWITCH

(a) Remove the four screws.

(b) Disconnect the connector from the power window master switch.

(c) Remove the pull handle with power window switch.

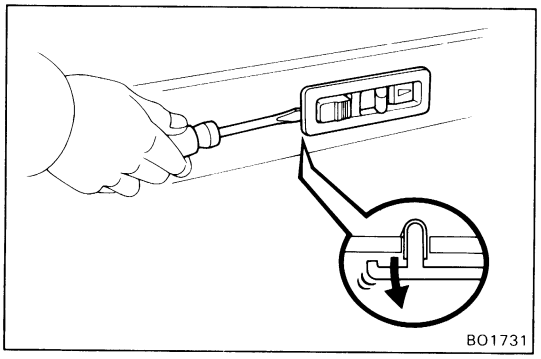

3. REMOVE DOOR LOCK LEVER BEZEL

Push the claw of the bezel with a screwdriver, and remove the bezel.

4. REMOVE INSIDE HANDLE BEZEL

5. REMOVE DOOR COURTESY LIGHT

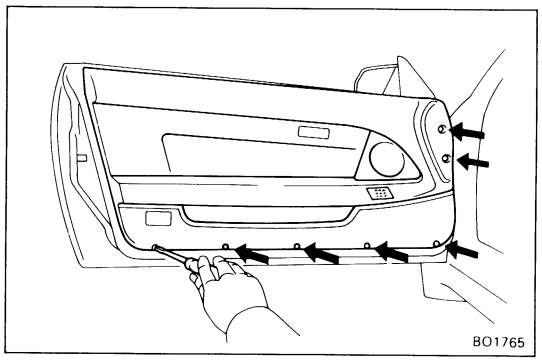

6. REMOVE DOOR TRIM

(a) Remove the seven screws.

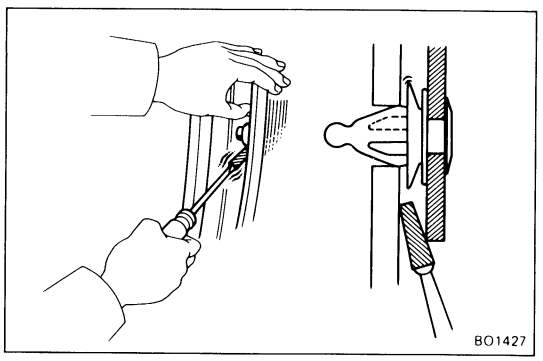

(b) Insert a screwdriver between the retainers and door trim to pry it loose.

HINT: Tape the screwdriver tip before use.

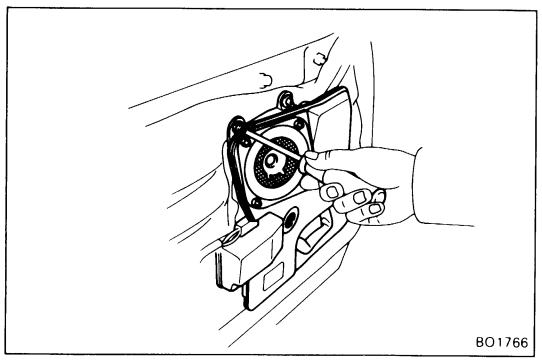

7. REMOVE SPEAKER

(a) Disconnect the connector from the speaker.

(b) Remove the speaker with four screws.

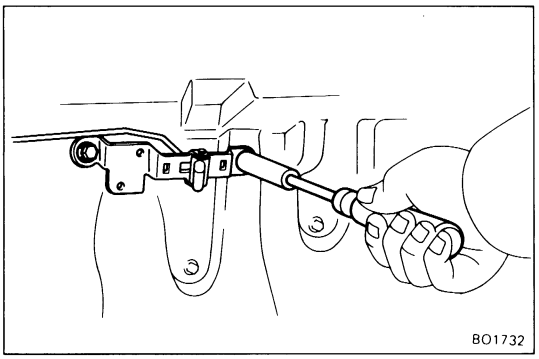

8. REMOVE DOOR LOCK LEVER

(a) Disconnect the connector from the switch.

(b) Remove the two screws.

(c) Disconnect the link from the door lock lever.

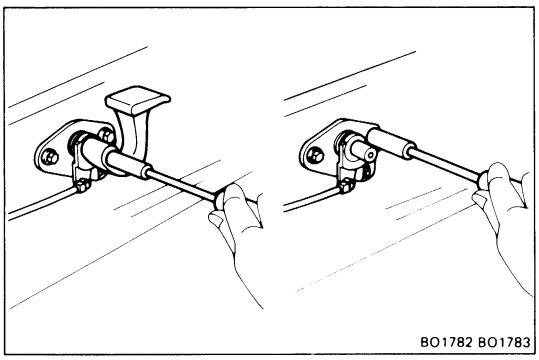

9. REMOVE INSIDE HANDLE

(a) Remove the screw and inside handle.

(b) Remove the three screws and inside handle control.

(c) Disconnect the link from the inside handle control.

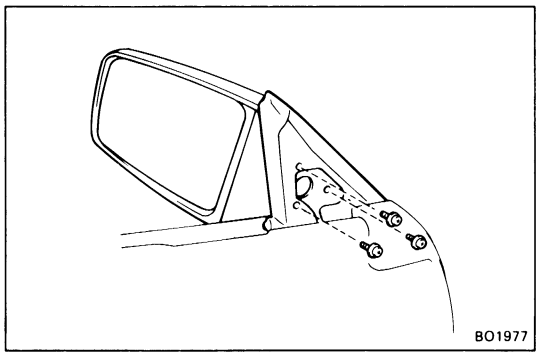

10. REMOVE REAR VIEW MIRROR

(a) Remove the cover.

HINT: Tape the screwdriver tip before use.

(b) Disconnect the connector from the mirror.

(c) Remove the three screws and rear view mirror.

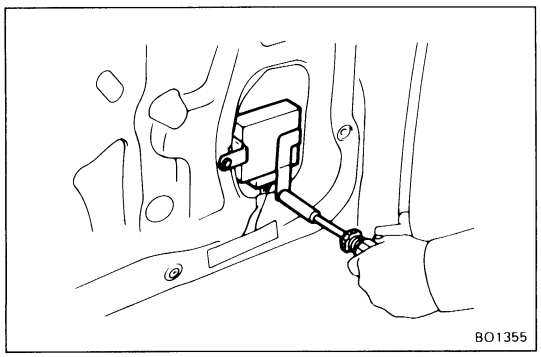

11. REMOVE DOOR LOCK CONTROL RELAY

(a) Disconnect the connector from the relay.

(b) Remove the relay with two bolts.

12. REMOVE SERVICE HOLE COVER

13. REMOVE DOOR WEATHERSTRIP

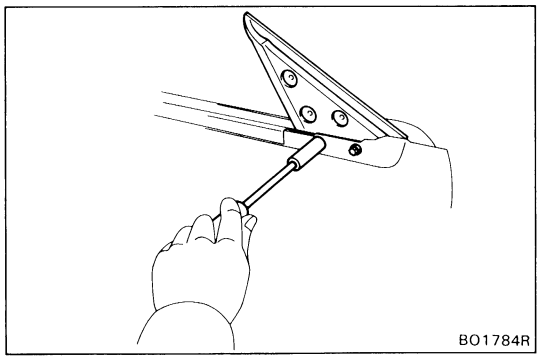

14. REMOVE DOOR MIRROR BRACKET

Remove the nut, two bolts and door mirror bracket.

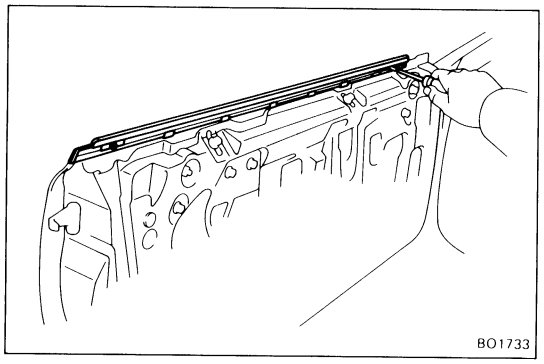

15. REMOVE DOOR BELT MOULDING
(See pages BO-19 and 20)

Remove the two screws and moulding.

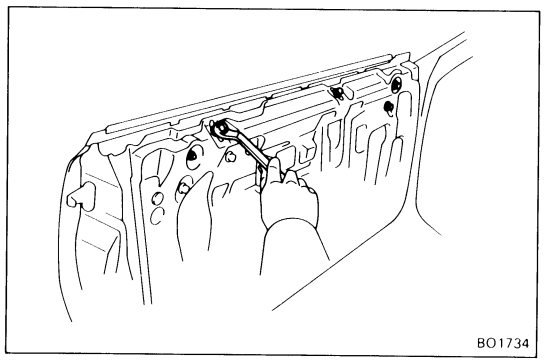

16. REMOVE TWO DOOR GLASS STOPPERS

17. REMOVE TWO DOOR TRIM SUPPORTS

18. REMOVE INNER STABILIZER

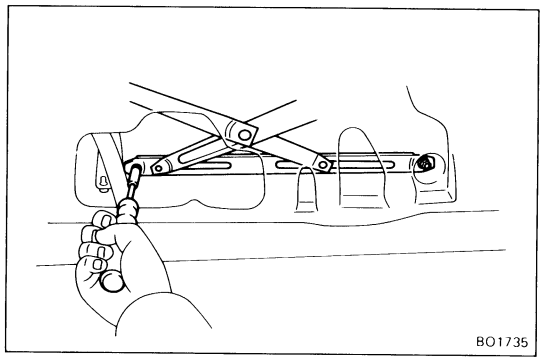

19. REMOVE DOOR GLASS

(a) Remove the two glass channel mounting nuts.

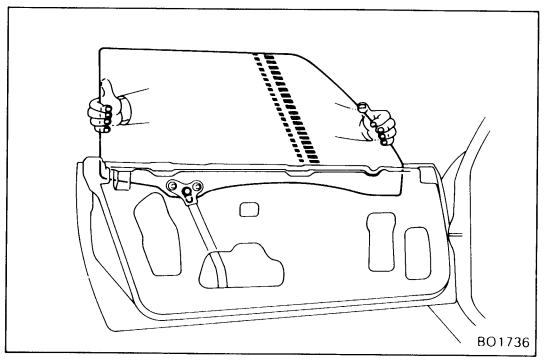

(b) Remove the door glass by pulling it upward.

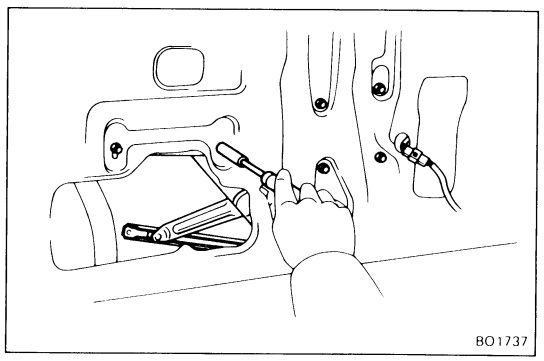

20. REMOVE WINDOW REGULATOR

(a) Disconnect the connector from the motor.

(b) Remove the equalizer arm bracket mounting bolts.

(c) Remove the regulator mounting bolts.

(d) Remove the regulator through the service hole.

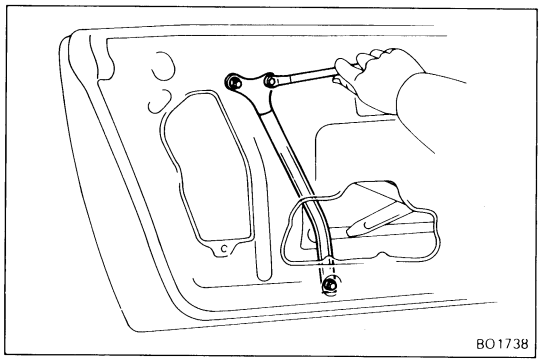

21. REMOVE GLASS GUIDE

Remove the three nuts and glass guide.

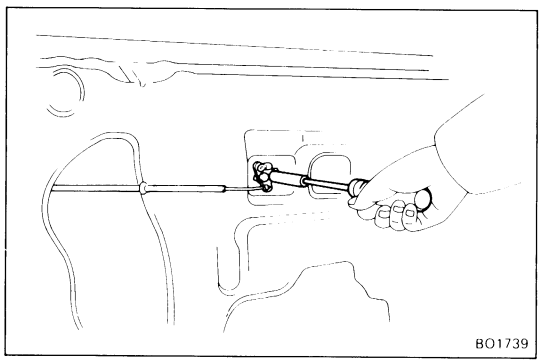

22. REMOVE DOOR LOCK CONTROL

Disconnect the link from the door lock control.

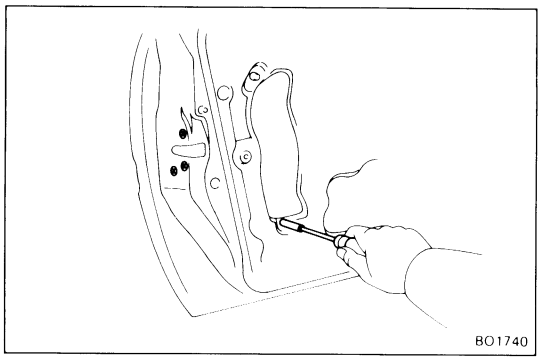

23. REMOVE DOOR LOCK WITH SOLENOID

(a) Disconnect the links from the outside handle and door lock cylinder.

(b) Disconnect the connectors from the door lock solenoid and key unlock switch.

(c) Remove the bolt, three screws and the door lock.

(d) Remove two screws and the solenoid from the door lock.

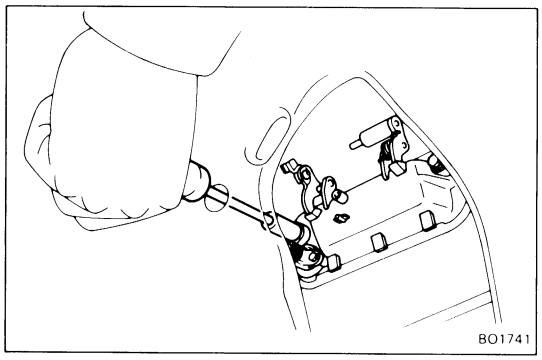

24. REMOVE OUTSIDE HANDLE WITH DOOR LOCK CYLINDER

Remove the two bolts and outside handle with the door lock cylinder.

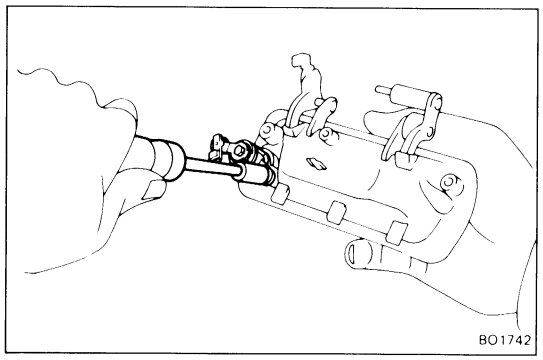

25. REMOVE DOOR LOCK CYLINDER

Remove the bolt and door lock cylinder from the outside handle.

ASSEMBLY OF FRONT DOOR

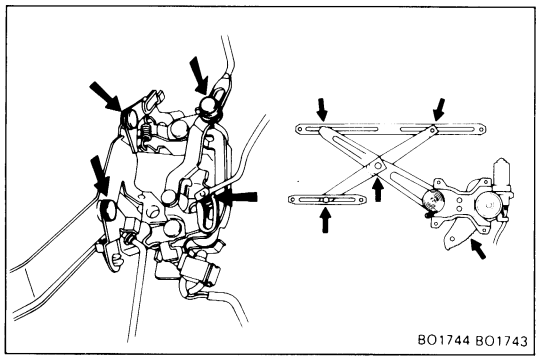

1. APPLY MP GREASE TO PARTS BEFORE INSTALLING

(a) Apply MP grease to the sliding surface and gear of the window regulator.

NOTICE: Do not apply MP grease to the spring of the window regulator.

(b) Apply MP grease to the sliding surface of the door lock.

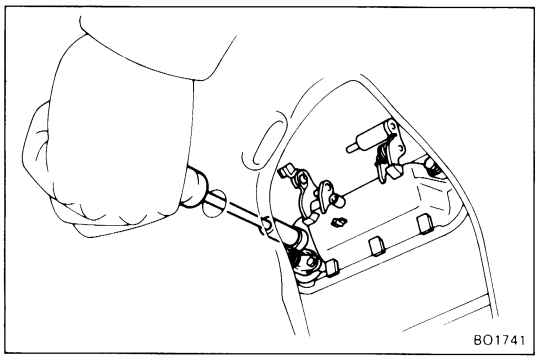

2. INSTALL OUTSIDE HANDLE

(a) Install the door lock cylinder with the bolt to the outside handle.

(b) Install the outside handle with the two bolts.

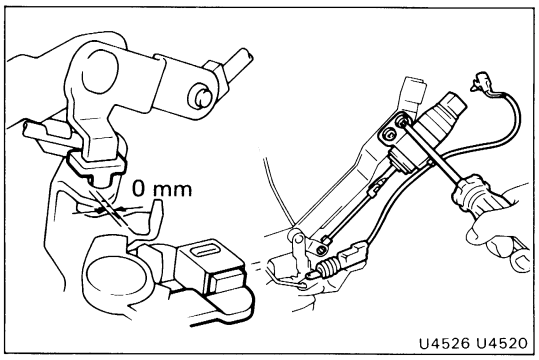

3. INSTALL DOOR LOCK SOLENOID TO DOOR LOCK

(a) Install the door lock solenoid to the door lock.

(b) Tighten the two screws after adjusting so that the gap shown in the figure becomes closed when unlocked.

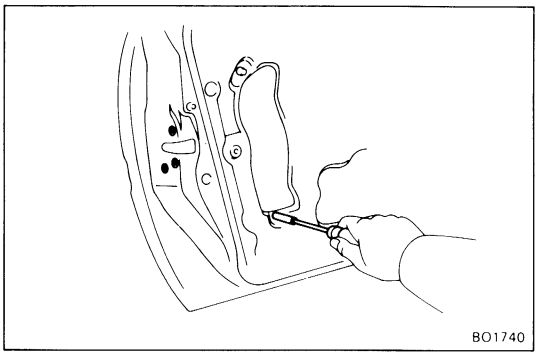

4. INSTALL DOOR LOCK

(a) Install the door lock with the two bolts and three screws.

(b) Connect the connectors to the door lock solenoid and key unlock switch.

(c) Connect the links to the outside handle and door lock cylinder.

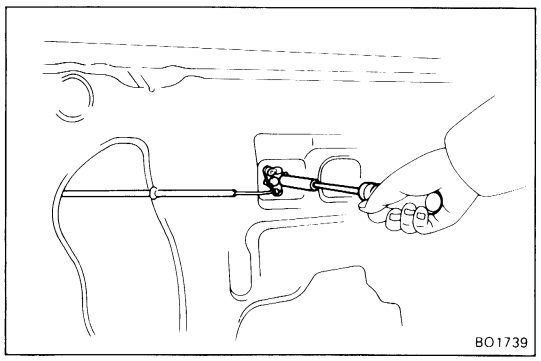

5. INSTALL DOOR LOCK CONTROL

(a) Connect the link to the door lock control.

(b) Install the door lock control with the two screws.

6. CHECK DOOR LOCK OPERATION

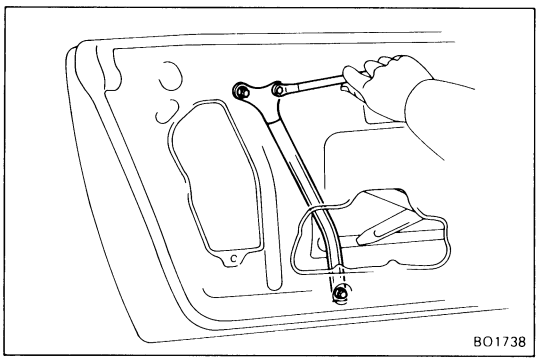

7. INSTALL GLASS GUIDE

Install the glass guide and temporarily tighten the three nuts.

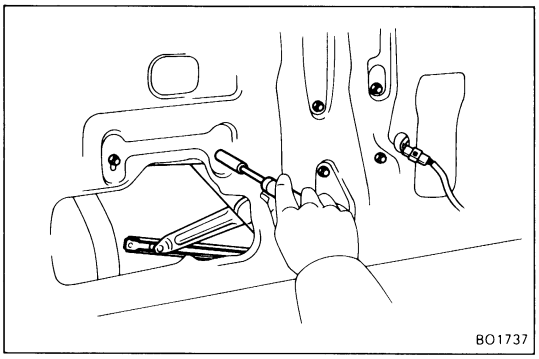

8. INSTALL WINDOW REGULATOR

(a) Install the regulator with the mounting bolts.

(b) Temporarily tighten the equalizer arm bracket mounting bolts.

(c) Connect the connector to the motor.

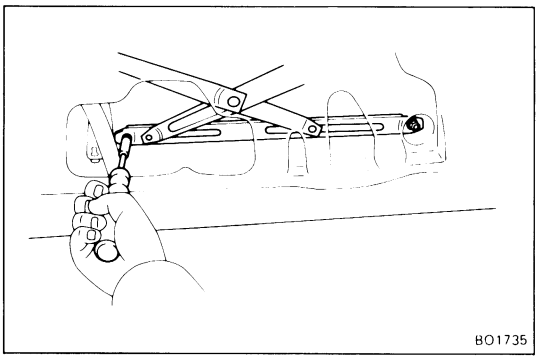

9. INSTALL DOOR GLASS

Install the door glass with the two nuts.

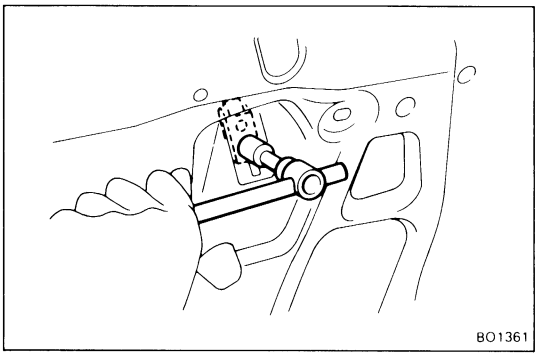

10. INSTALL INNER STABILIZER

Install the inner stabilizer and temporarily tighten the bolt.

11. INSTALL TWO DOOR GLASS STOPPERS

Install the door glass stoppers and temporarily tighten the two bolts.

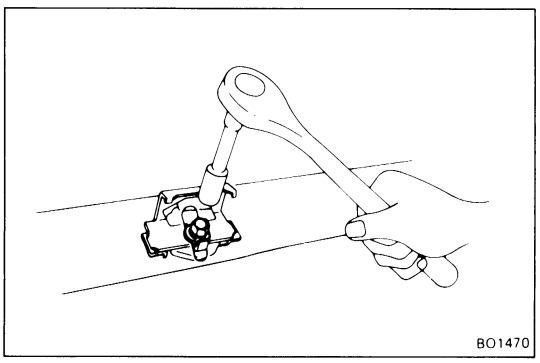

12. INSTALL TWO DOOR TRIM SUPPORTS

Install the door trim supports and temporarily tighten the two bolts.

13. INSTALL DOOR BELT MOULDING
(See page BO-20)

(a) Tap the moulding onto the door by hand.

(b) Install the two screws.

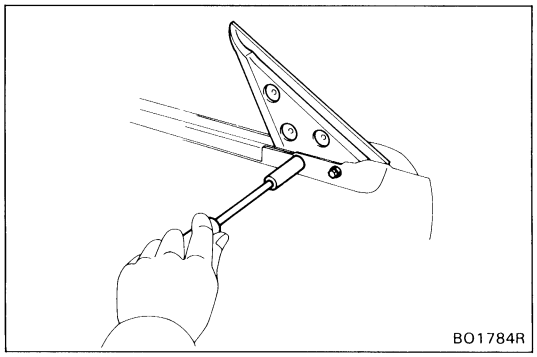

14. INSTALL DOOR MIRROR BRACKET

Install the door mirror bracket and temporarily tighten the nut and two bolts.

15. INSTALL DOOR WEATHERSTRIP

Install the door weatherstrip with three screws and twenty-two clips.

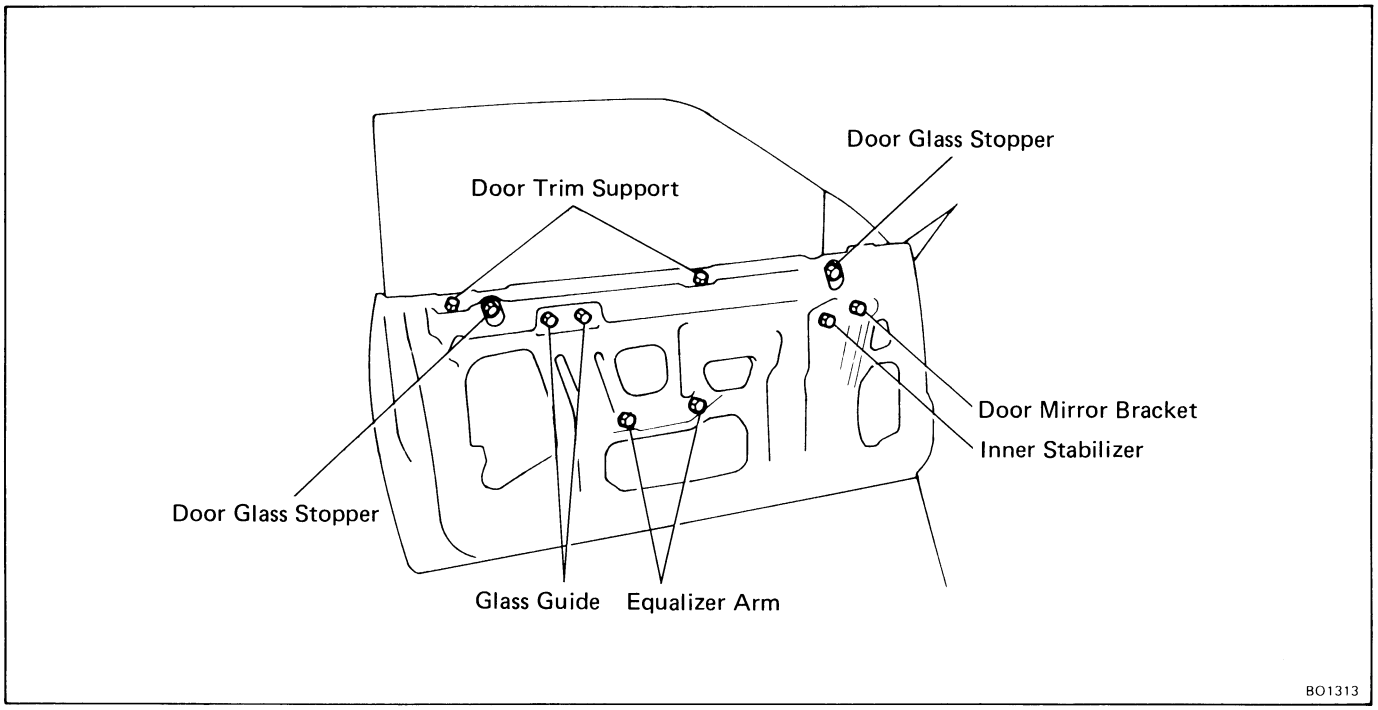

16. ADJUST DOOR TRIM SUPPORTS

Pressing the claw of the door trim support to the door inner panel, and tighten the bolt.

17. ADJUST DOOR GLASS

(a) **(In Left/Right Direction—Upper Side of Glass)**
Adjust the stud bolts of the glass guide. For example, if you turn right both stud bolts, the upper side of the glass move to outside.

HINT: Turn both stud bolts of glass guide an equal amount.

(b) **(In Forward/Rearward Direction)**
Adjust the rear glass guide.

(c) **(In Vertical Direction)**
Adjust the door glass stopper.

(d) **(In Lean of Forward/Rearward Direction)**
Adjust the equalizer arm bracket mounting bolts.

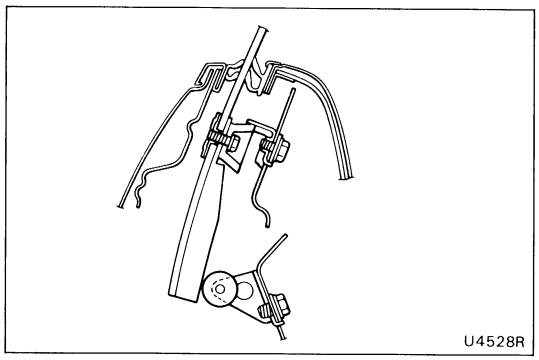

18. ADJUST INNER STABILIZER

With the door glass fully closed, adjust the inner stabilizer so it lightly makes contact with the glass plate.

19. TIGHTEN EACH BOLT, NUT OF EACH PART

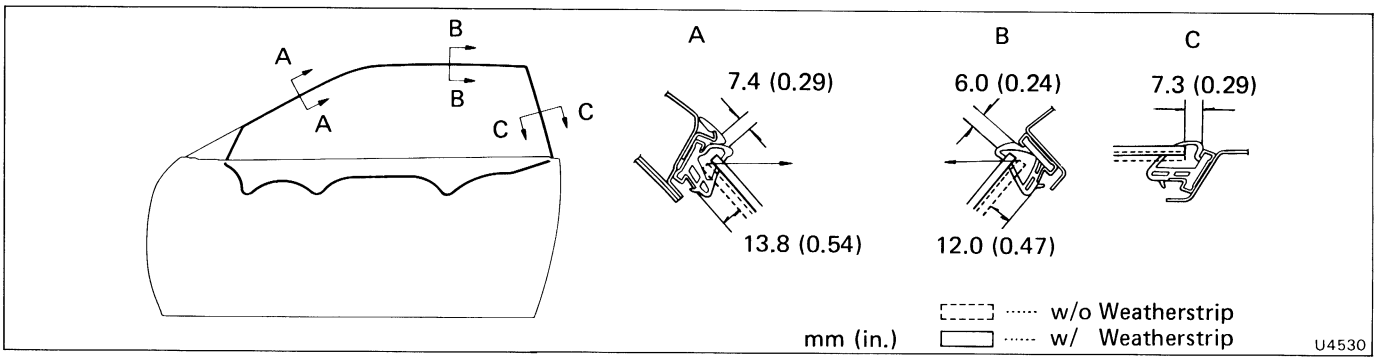

20. CHECK DOOR GLASS

(a) When you close the door with the glass fully colsed, check that the A-A, B-B, C-C sections are in the same condition as shown in the illustration.

(b) When you close the door with the glass fully closed, be careful that the glass is not caught in the weatherstrip.

(c) When you raise up the glass, check that the glass and the roof weatherstrip retainer are parallel and the front and rear door glass stoppers touch at the same time.

(d) When you raise up the glass to the middle, check that the gap of the glass is not big in the door trim supprot.

(e) Check the door trim support does not push the door glass too much.

(f) Check that the glass move smoothly.

If the above conditions are not met, readjust the glass.

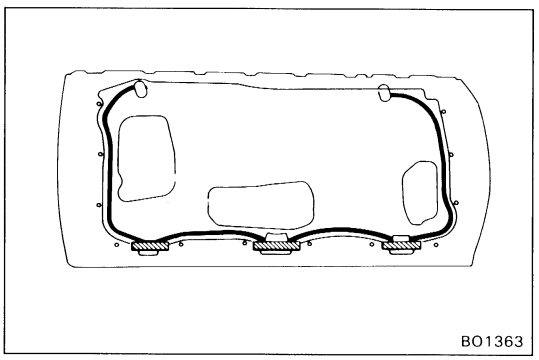

21. INSTALL SERVICE HOLE COVER

(a) Install the service hole cover with adhesive.

(b) Insert the lower edge of the cover into the panel slit.

(c) Seal the panel slit with cotton tape.

NOTICE: Do not block the trim clip seating with the tape.

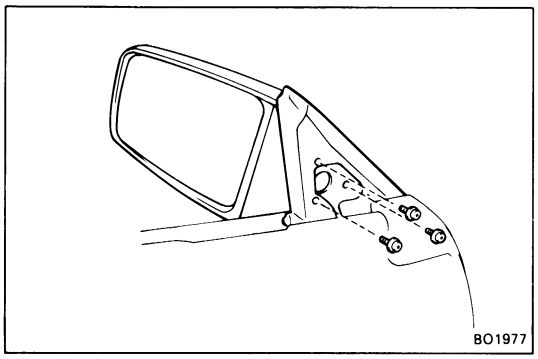

22. INSTALL REAR VIEW MIRROR

(a) Install the rear view mirror with the three screws.

(b) Connect the connector to the mirror.

(c) Install the cover.

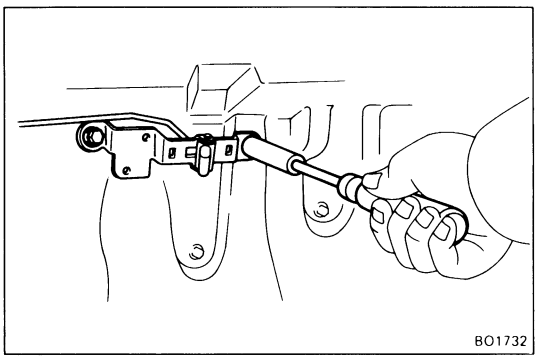

23. INSTALL DOOR LOCK LEVER

(a) Connect the link to the door lock lever.

(b) Install the two screws.

(c) Connect the connector to the switch.

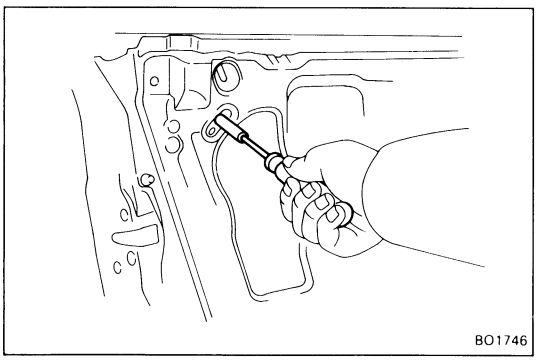

24. ADJUST DOOR LOCK CONTROL

(a) Peel off the outer ridges of the service hole cover.

(b) Loosen the adjusting bolt.

(c) Lock the door lock lever and tighten the adjusting bolt.

(d) Install the outer ridges of the service hole cover.

25. CHECK DOOR LOCK OPERATION

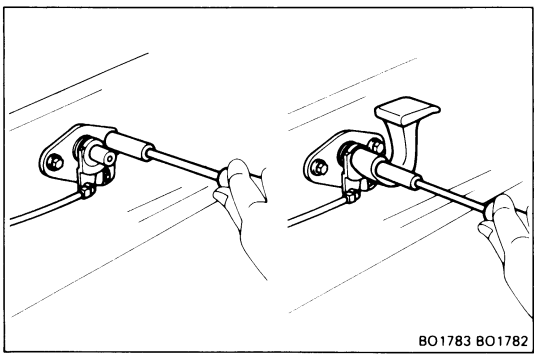

26. INSTALL INSIDE HANDLE

(a) Connect the link to the inside handle control.

(b) Install the inside handle control with the three screws.

(c) Install the inside handle with the screw.

27. INSTALL DOOR LOCK CONTROL RELAY

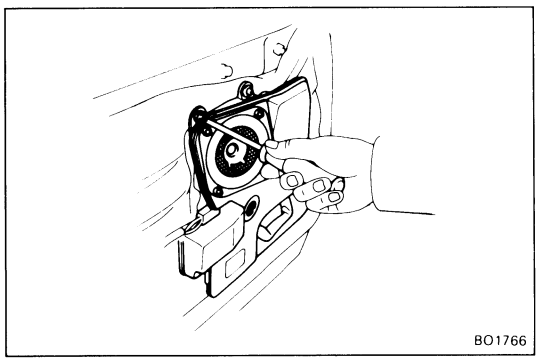

28. INSTALL SPEAKER

(a) Install the speaker with four screws.

(b) Connect the connector to the speaker.

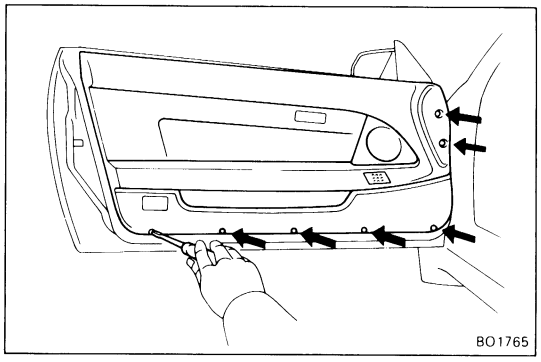

29. INSTALL DOOR TRIM

(a) Connect the connector to the switch.

(b) Install the door trim with clips to the inside door panel by tapping.

(c) Install the seven screws.

30. INSTALL DOOR COURTESY LIGHT

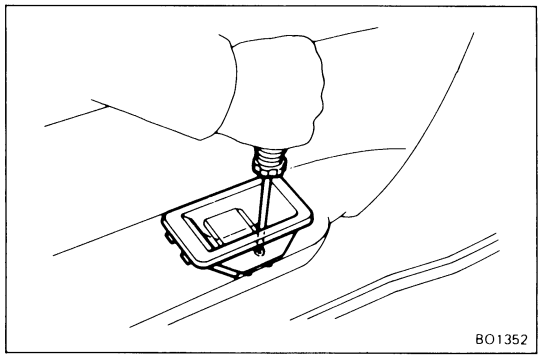

31. INSTALL INSIDE HANDLE BEZEL

32. INSTALL DOOR LOCK LEVER BEZEL

33. INSTALL PULL HANDLE

(a) Connect the connector to the power window switch.

(b) Install the pull handle with the power window switch.

34. INSTALL SPEAKER COVER

ADJUSTMENT OF FRONT DOOR

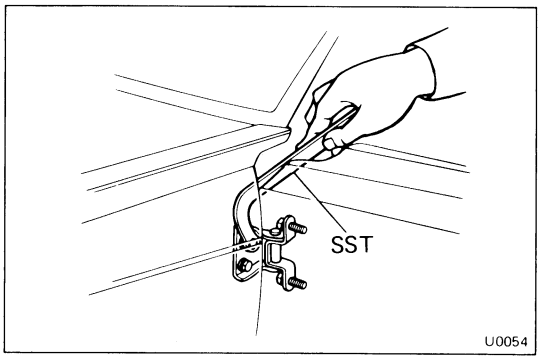

1. ADJUST DOOR IN FORWARD/REARWARD AND VERTICAL DIRECTIONS

Using SST, adjust the door by loosening the body side hinge bolts.

SST 09812-00010

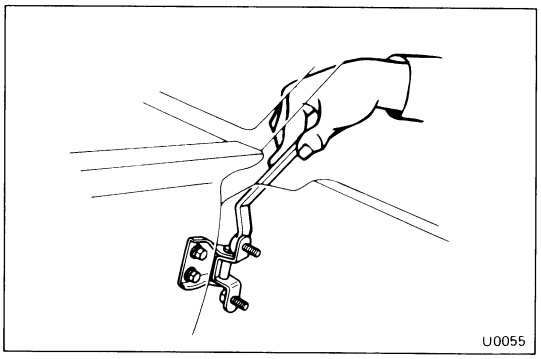

2. ADJUST DOOR IN LEFT/RIGHT AND VERTICAL DIRECTIONS

Adjust the door by loosening the door side hinge bolts.

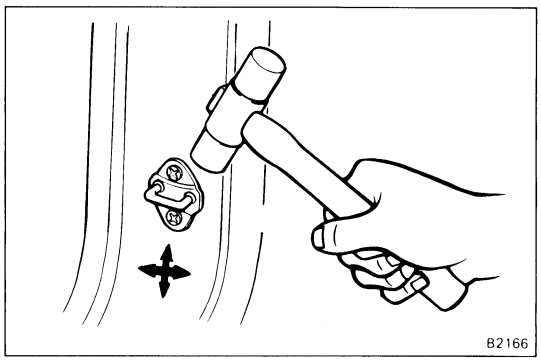

3. ADJUST DOOR LOCK STRIKER

(a) Check that the door fit and door lock linkages are adjusted correctly.

(b) Adjust the striker position by slightly loosening the striker mounting screws, and hitting the striker with a hammer.

(c) Tighten the striker mounting screws again.

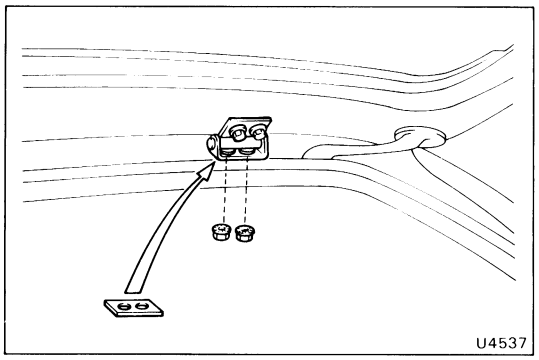

BACK DOOR

ADJUSTMENT OF BACK DOOR

1. **ADJUST DOOR IN FORWARD/REARWARD AND LEFT/RIGHT DIRECTION**

   Adjust the door by loosening the door side hinge bolts.

2. **ADJUST DOOR IN VERTICAL DIRECTION**

   Adjust the door by increasing or decreasing the number of the shims.

3. **ADJUST LOCK**

   Adjust the lock by loosening the bolts.

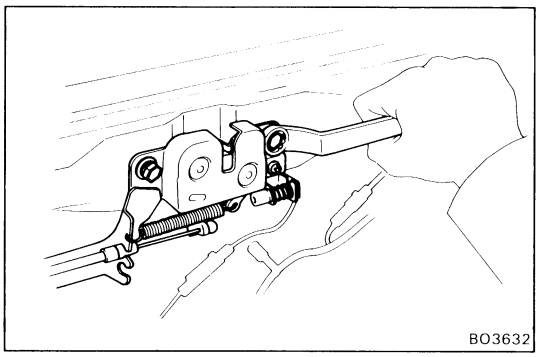

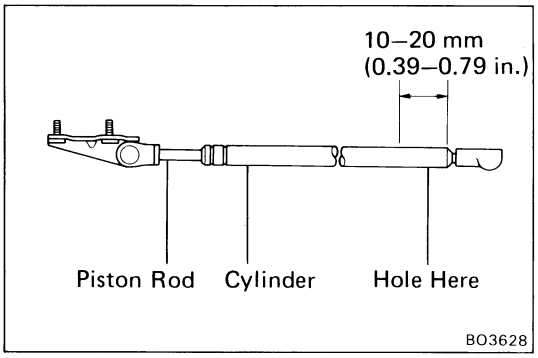

Back Door Damper Stay

NOTICE: Handling the damper.

(a) Do not disassemble the damper because the cylinder is filled with pressurized gas.

(b) If the damper is to be replaced, drill a 2.0 — 3.0 mm (0.079 — 0.118 in.) hole in the bottom of the removed damper cylinder to completely release the high-pressure gas before disposing of it.

(c) When drilling, chips may fly out so work carefully.

(d) The gas is colorless, odorless and non-toxic.

(e) When working, handle the damper carefully. Never score or scratch the exposed part of the piston rod, and never allow paint or oil to get on it.

(f) Do not turn the piston rod and cylinder with the damper fully extended.

REMOVAL OF BACK DOOR DAMPER STAY

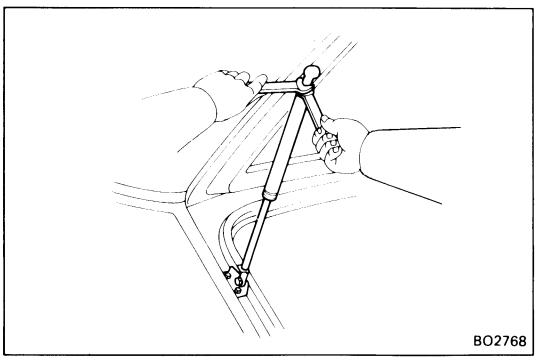

1. **REMOVE ROOF SIDE INNER GARNISH**
2. **REMOVE DAMPER STAY LOWER END FROM BODY**
3. **REMOVE DAMPER STAY UPPER END FROM BACK DOOR**

INSTALLATION OF BACK DOOR DAMPER STAY

1. **INSTALL DAMPER STAY UPPER END TO BACK DOOR**
2. **INSTALL DAMPER STAY LOWER END TO BODY**
3. **INSTALL ROOF SIDE INNER GARNISH**

MOULDING

Windshield Outside Moulding

COMPONENTS

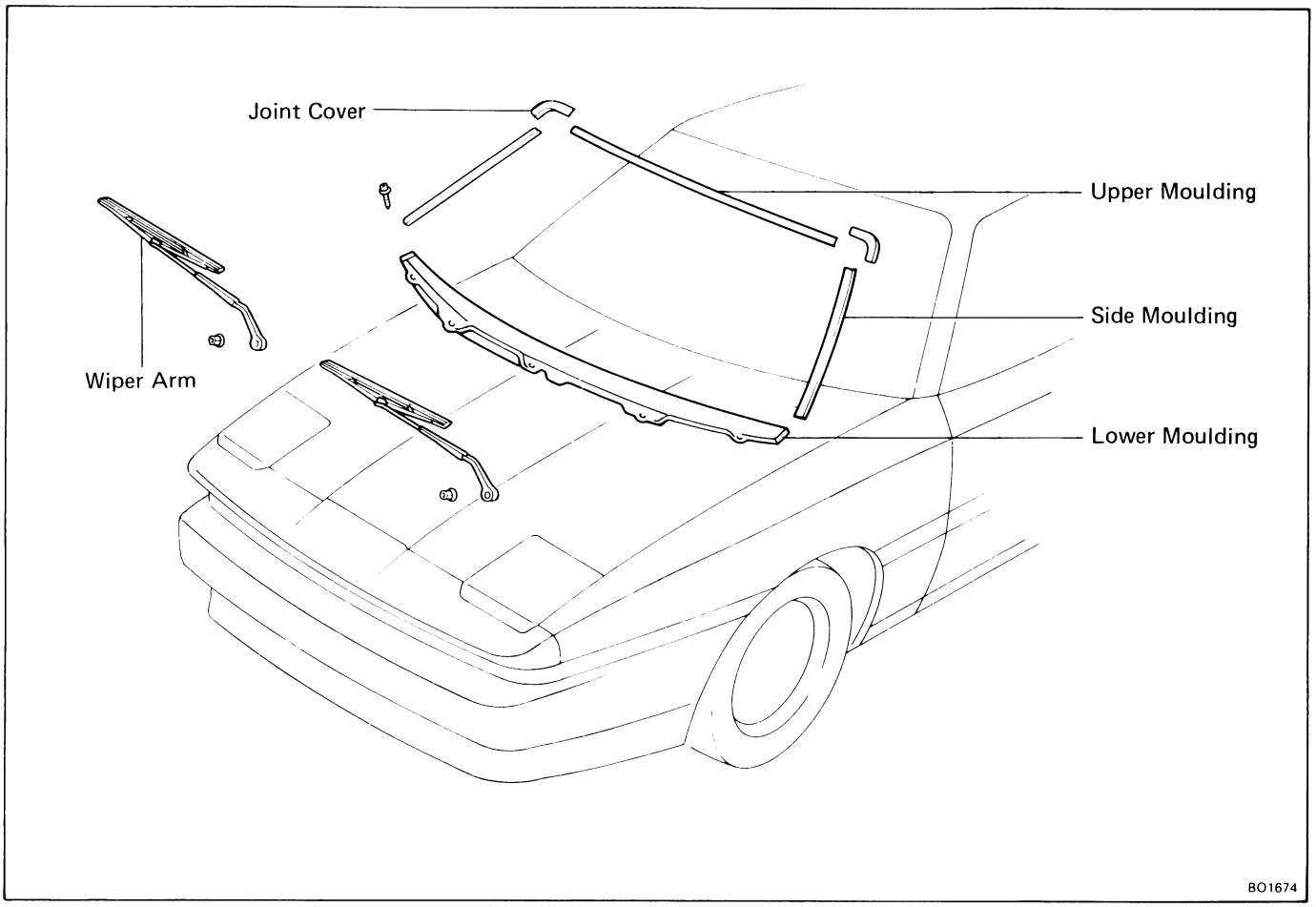

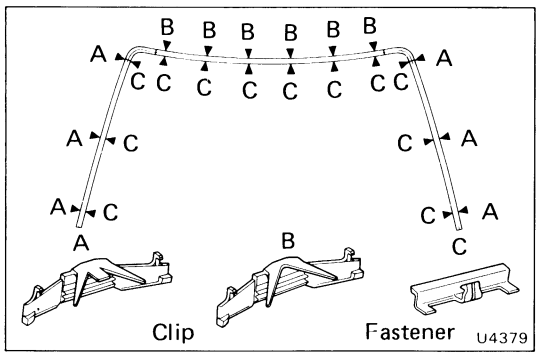

REMOVAL OF OUTSIDE MOULDING

There are two types of clips for moulding installation.

Locations of these clips and fasteners are as shown in the figure.

Carefully apply adhesive tape to protect the body.

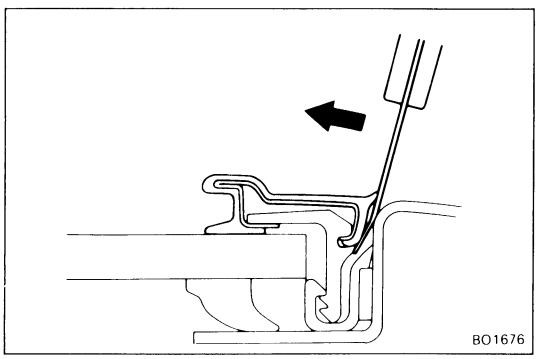

1. **REMOVE SIDE AND UPPER MOULDING**

   (a) Insert the tip of a scraper between the body and moulding.

   (b) Pry up the scraper to loosen the moulding from the claws of the clips and fasteners.

   HINT: Apply tape to the scraper blade to prevent scratching the vehicle body.

   (c) Remove the moulding.

2. **REMOVE WIPER ARMS**

3. **REMOVE LOWER MOULDING**

Remove the five screws and the moulding.

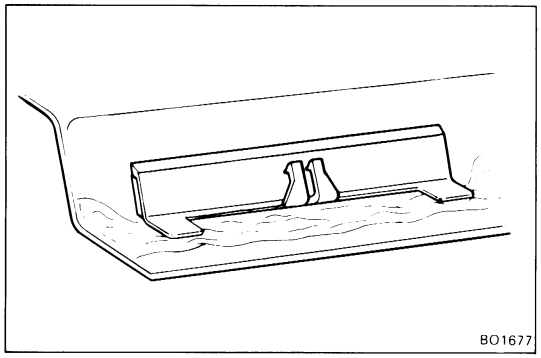

REPLACEMENT OF FASTENER

REPLACE FASTENER

(a) Remove the damaged fastener.

(b) Cut off the old adhesive around the fastener installation area.

HINT: Be careful not to damage the body.

(c) Clean the installation area.

(d) Install a new fastener onto the body.

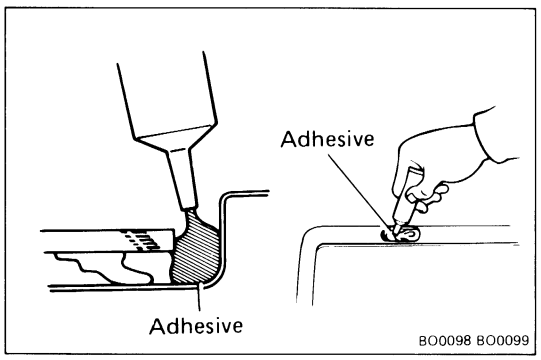

INSTALLATION OF OUTSIDE MOULDING

1. **APPLY ADHESIVE AT A NEW CLIP INSTALLATION AREA**

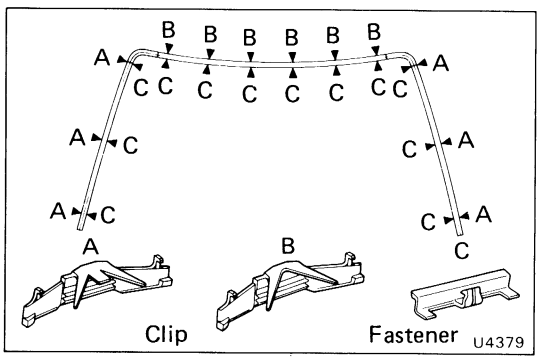

2. **INSTALL UPPER AND SIDE MOULDING**

(a) Check the position of the clips on the moulding and the installation area.

(b) Place the moulding onto the body.

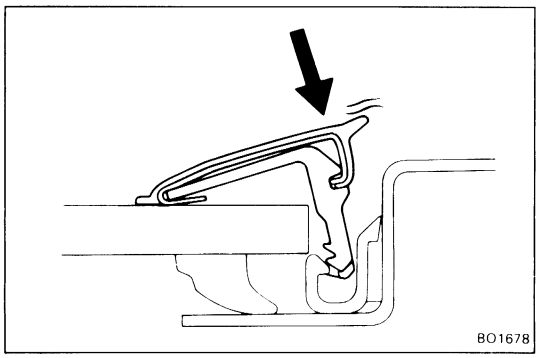

(c) Tap the moulding with your hand to fasten the clips at the glass edge.
At the same time, install the fasteners by tapping them by hand.

3. **INSTALL LOWER MOULDING**

Install the moulding with the five screws.

4. **INSTALL WIPER ARMS**

Side Moulding and Garnish

COMPONENTS

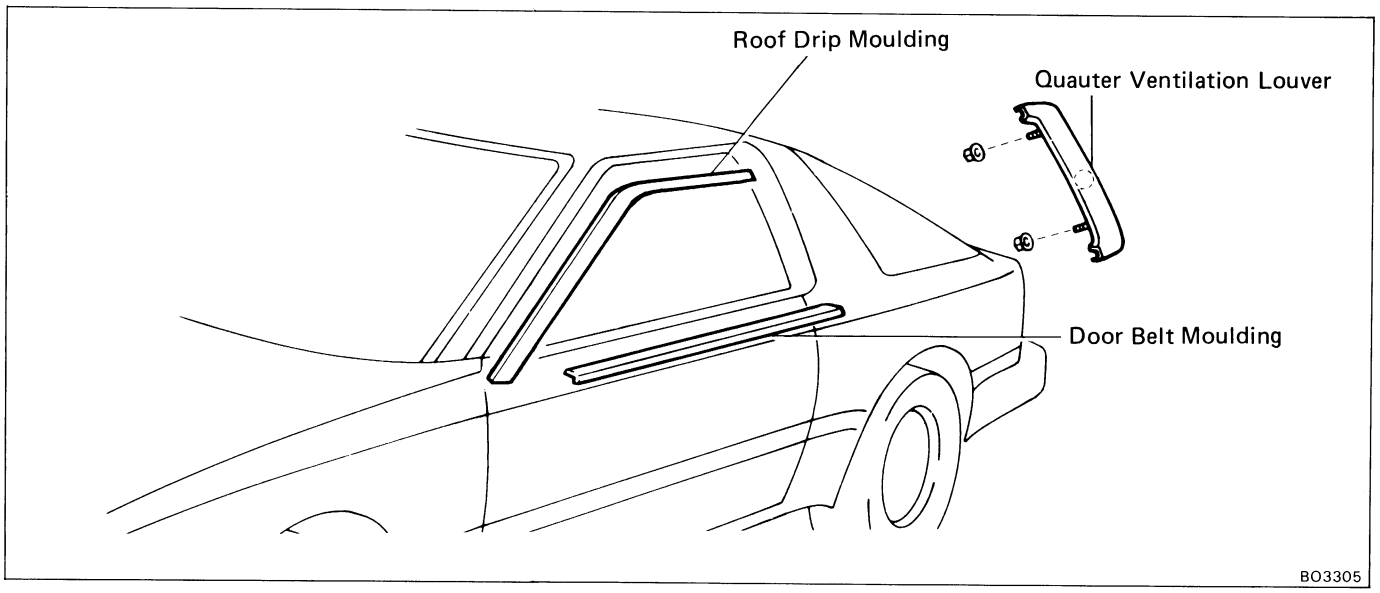

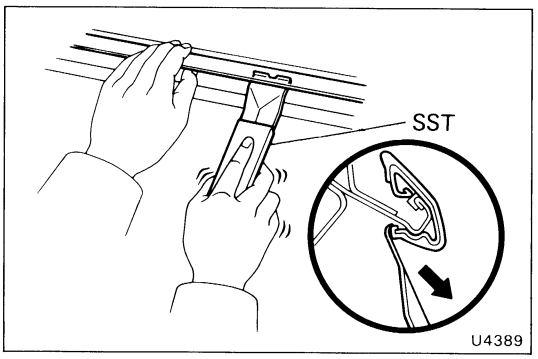

REMOVAL OF ROOF DRIP MOULDING

PULL OFF ROOF DRIP MOULDING

Using SST, pull off the roof drip moulding from both ends.

SST 09806-30010

HINT: Remove the moulding corners last.

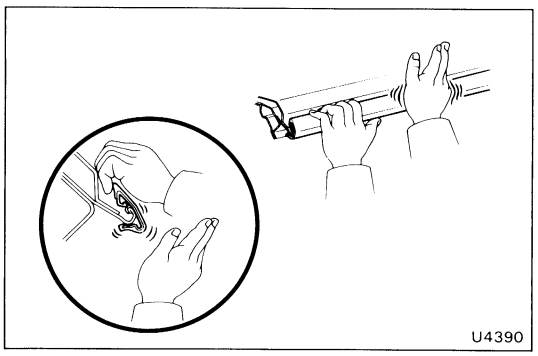

INSTALLATION OF ROOF DRIP MOULDING

INSTALL DRIP MOULDING BY HAND

Attach the upper edge of the moulding to the body flange.

Tap on the moulding by hand.

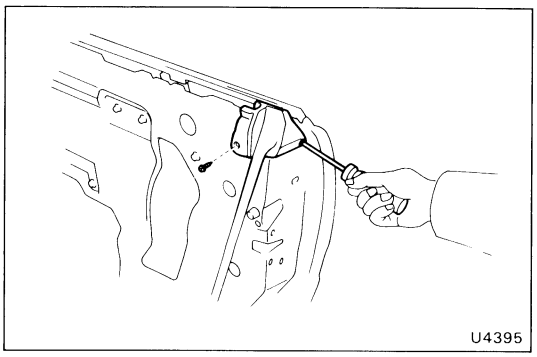

REMOVAL OF DOOR BELT MOULDING

1. **REMOVE DOOR TRIM**
   (See steps 1 to 6 on page BO-6)

2. **REMOVE DOOR MIRROR BRACKET AND MIRROR**
   (See steps 10 and 14 on page BO-7)

3. **REMOVE DOOR BELT MOULDING**
   (a) Remove two screws and rear side of the door weatherstrip.

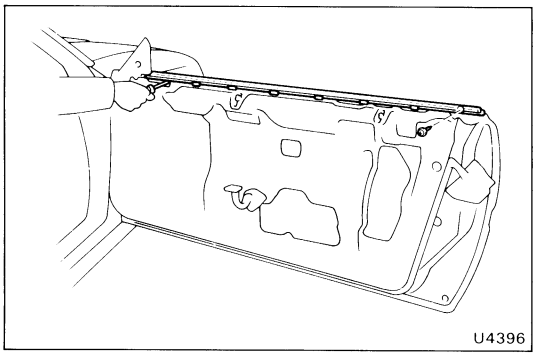

(b) Remove the two screws from the moulding.

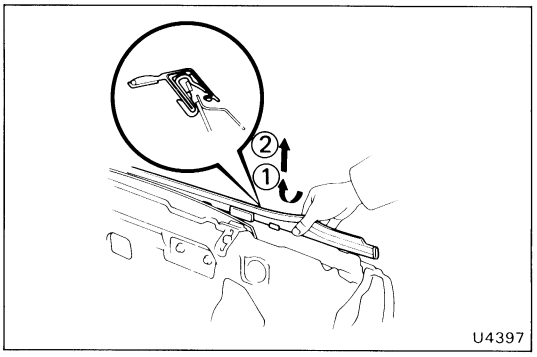

(c) Pry the clips and remove the door belt moulding.

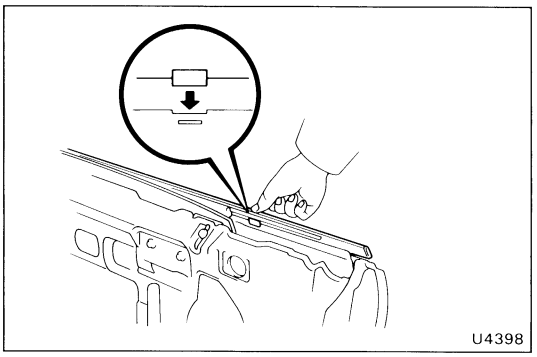

INSTALLATION OF DOOR BELT MOULDING

1. **INSTALL DOOR BELT MOULDING**
   (a) Push the moulding onto the clips to install.
   (b) Install two screws.
   (c) Install rear side of the door weatherstrip and two screws.
2. **INSTALL DOOR MIRROR BRACKET AND MIRROR**
   (See steps 14 on page BO-12 and step 20 page BO-14)
3. **INSTALL DOOR TRIM**
   (See steps 27 to 32 on page BO-15)

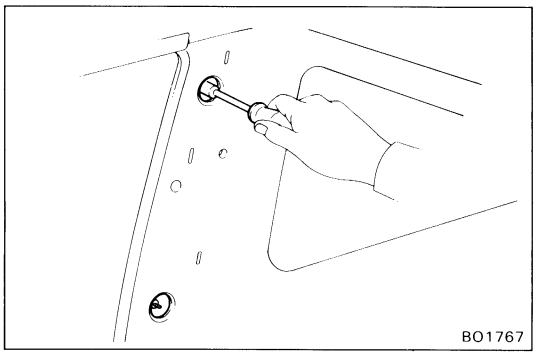

REMOVAL OF QUARTER VENTILATION LOUVER

1. **REMOVE ROOF SIDE INNER GARNISH**
   (See step 1 on page BO-38 to step 8 on page BO-39)
2. **REMOVE QUARTER VENTILATION LOUVER**
   (a) Remove two nuts.
   (b) Using a screwdriver, pry the clip and remove the quarter ventilation louver.

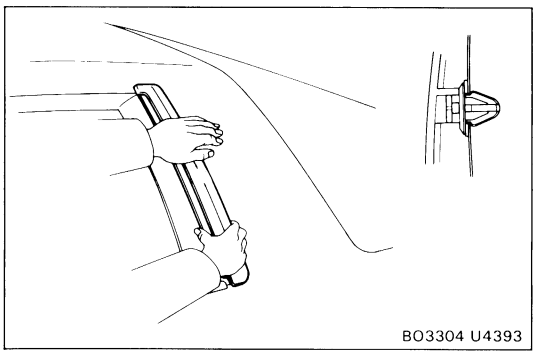

INSTALLATION OF QUARTER VENTILATION LOUVER

1. **INSTALL QUARTER VENTILATION LOUVER**
   (a) Tap the moulding onto the clip by hand.
   (b) Install two nuts.
2. **INSTALL ROOF SIDE INNER GARNISH**
   (See pages 4 to 11 on page BO-40)

Body Outside Moulding

TOOLS AND SUPPLIES

Part No.	Part name	Quantity
	Cleaner (for cleaning body and removing body oil stains) Heat light	

Precautions for storing moulding material:

- Store in cool place, avoiding direct sunlight, high temperature and dust.
- The moulding is of polyvinyl chloride, so do not allow it to come in contact with thinner or other solvent, open flame, or boiling water.

COMPONENTS

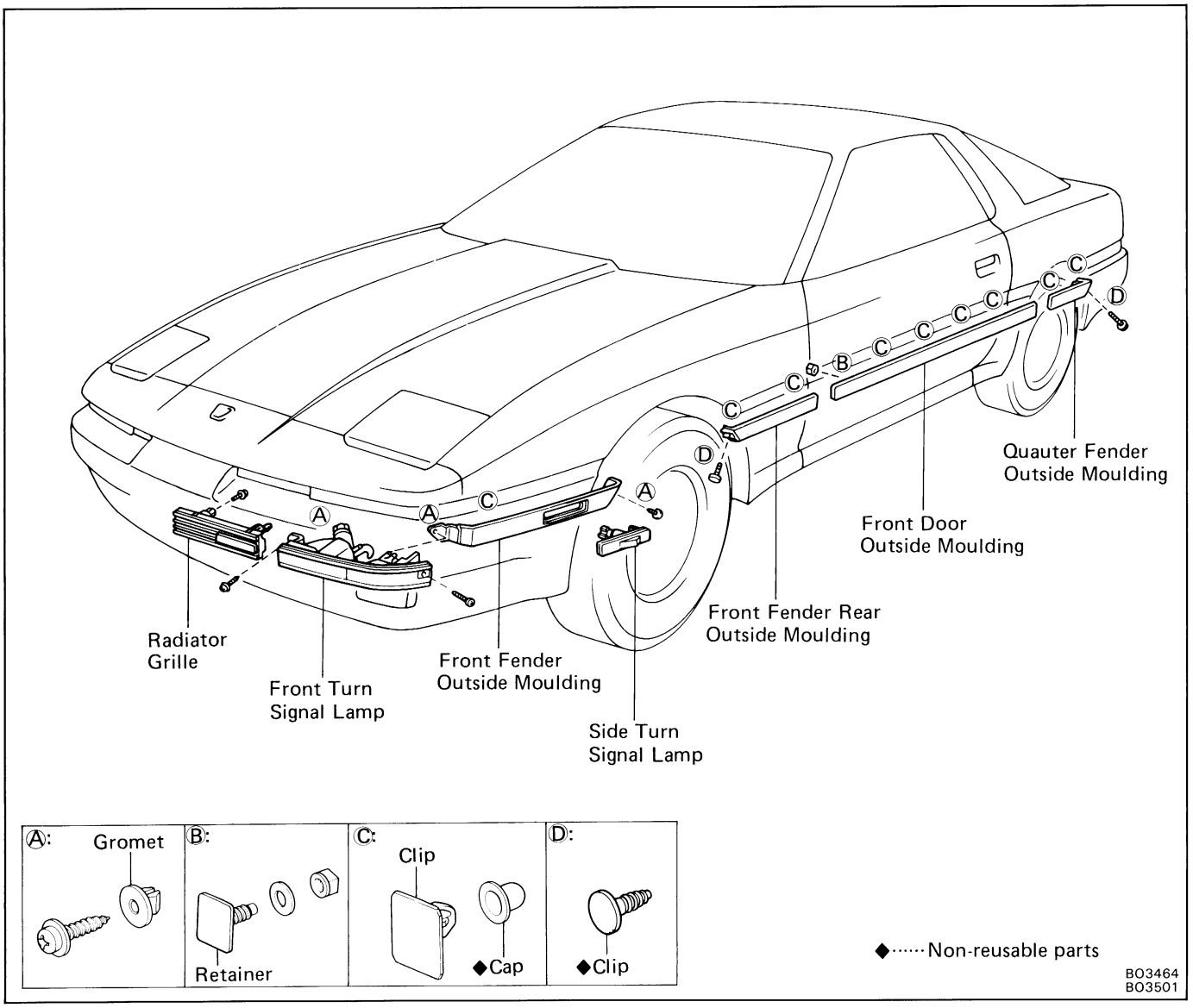

COMPONENTS (Cont'd)

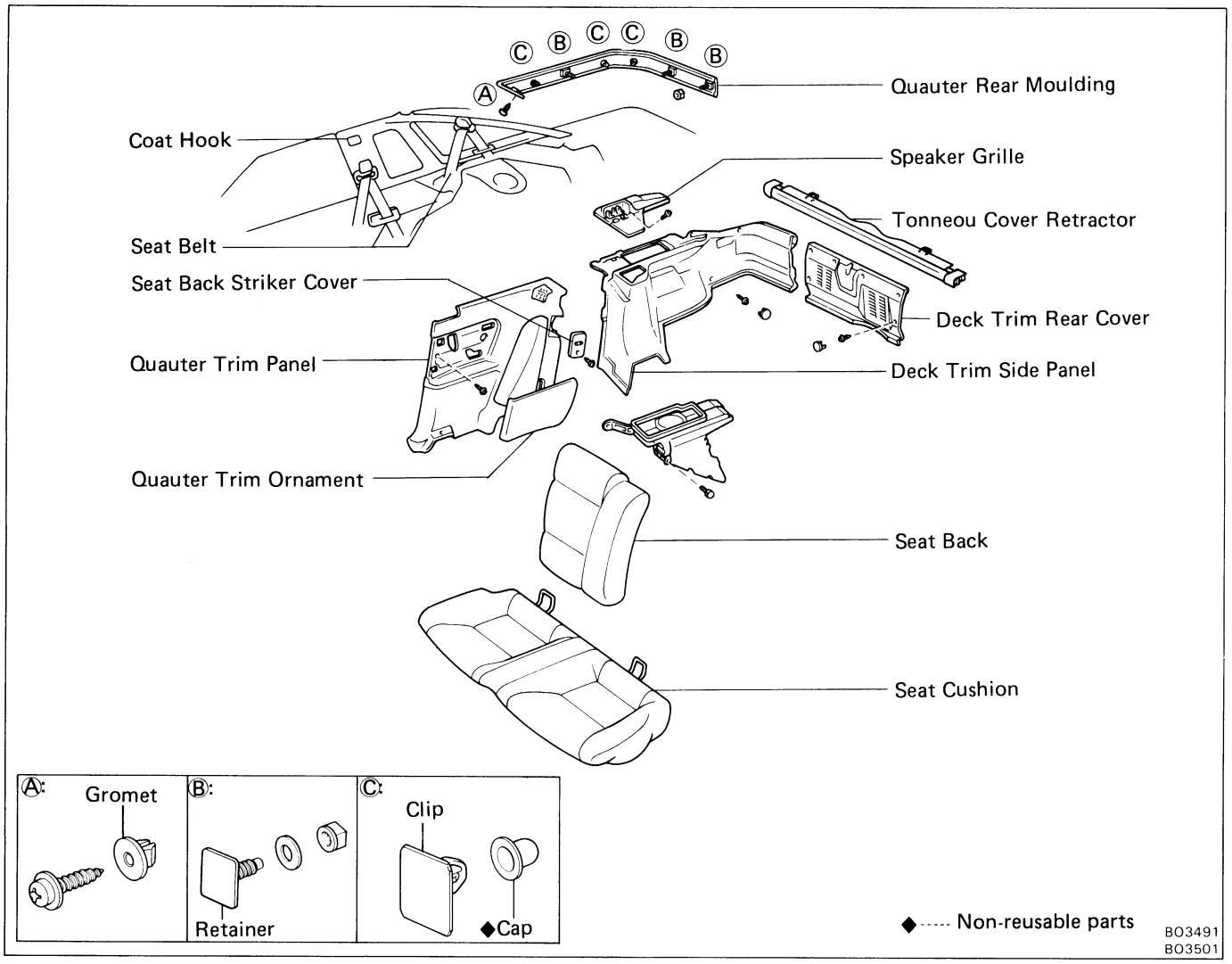

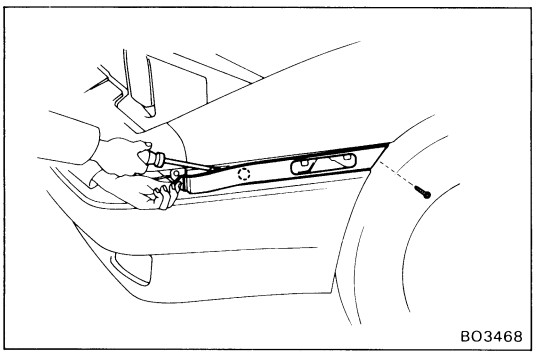

REMOVAL OF FRONT OUTSIDE MOULDING

1. **REMOVE RADIATOR GRILLE**
2. **REMOVE FRONT AND SIDE TURN SIGNAL LAMP**
3. **REMOVE FRONT FENDER OUTSIDE MOULDING**
   (a) Remove the screw.
   (b) Using a screwdriver, pry off the outside moulding.
   HINT: Tape the screwdriver tip before use.

INSTALLATION OF FRONT FENDER OUTSIDE MOULDING

1. **BEFORE INSTALLING MOULDING, REPLACE CAPS**
   Remove the remaining caps on the clip installation holes of the body, and install new caps.
2. **CLEAN MOUNTING SURFACE OF BODY**
   Using cleaner, clean the mounting surface of the body.

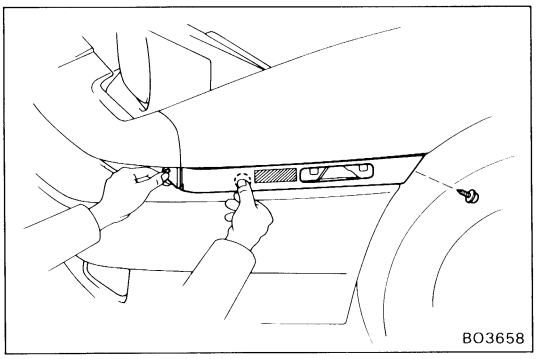

3. **INSTALL MOULDING**

   (a) Lift moulding release sheat from face of the moulding.

   NOTICE: When the moulding release sheat is removed, be sure that no dirt or dust can get onto the uncovered area.

   (b) Tap the moulding onto the clips by hand.

   (c) Using a screwdriver, install a screw.

4. **INSTALL FRONT AND SIDE TURN SIGNAL LAMP**

5. **INSTALL RADIATOR GRILLE**

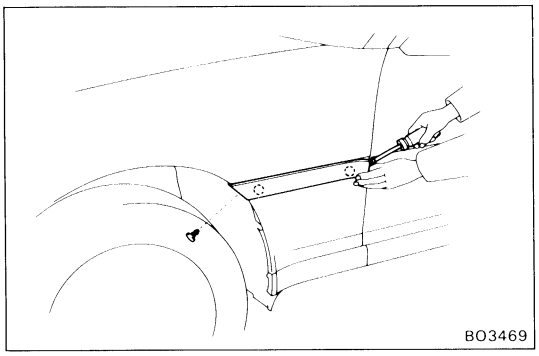

REMOVAL OF FRONT FENDER REAR OUTSIDE MOULDING

REMOVE FRONT FENDER REAR OUTSIDE MOULDING

(a) Remove a front side clip.

(b) Using a screwdriver, pry off the outside moulding.

HINT: Tape the screwdriver tip before use.

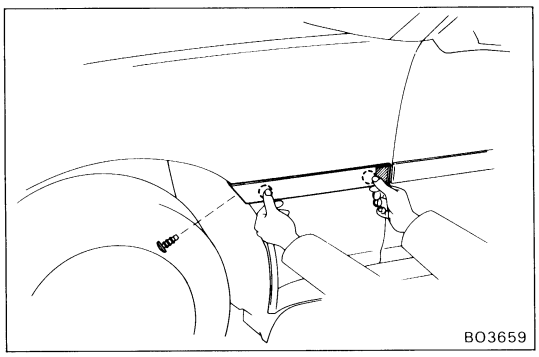

INSTALLATION OF FRONT FENDER REAR OUTSIDE MOULDING

INSTALL FRONT FENDER REAR OUTSIDE MOULDING

1. **CLEAN MOUNTING SURFACE OF BODY**

   Using cleaner, clean the mounting surface of the body.

2. **INSTALL FRONT FENDER REAR OUTSIDE MOULDING**

   (a) Lift moulding release sheat from face of the moulding.

   NOTICE: When the moulding release sheat is removed be sure that no dirt or dust can get onto the uncovered area.

   (b) Tap the moulding onto the clips by hand.

   (c) Install the new frontside clip.

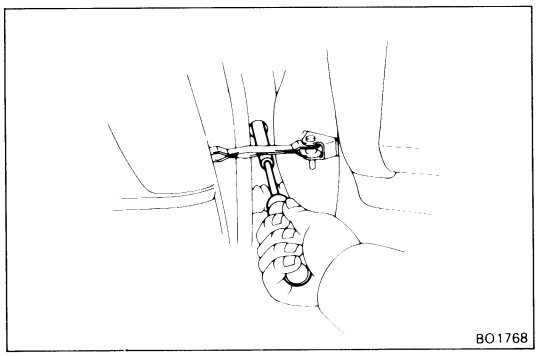

REMOVAL OF FRONT DOOR OUTSIDE MOULDING

1. **REMOVE FRONT DOOR OUTSIDE MOULDING**

   (a) Remove the nut.

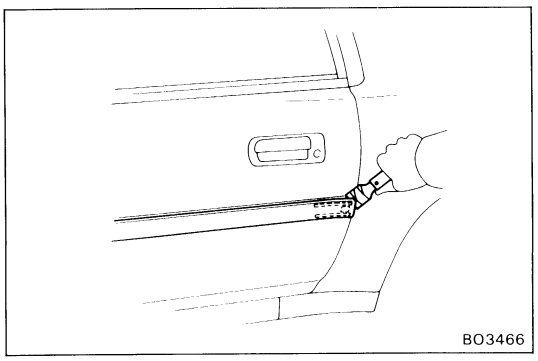

   (b) Using a scraper, peel off the acrylic formed tape of the moulding rear end.

   HINT: Tape the scraper tip before use.

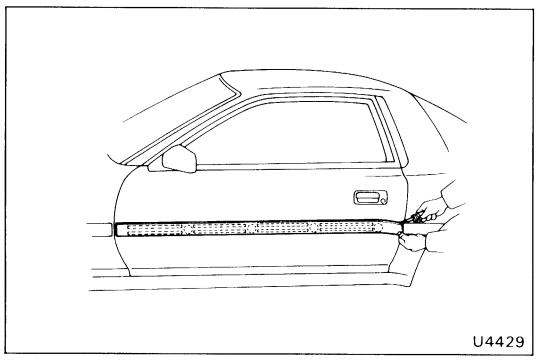

(c) Using a screwdriver, pry loose the clips.

HINT: Tape the screwdriver tip before use.

(d) Using the scraper, peel off the acrylic formed tape.

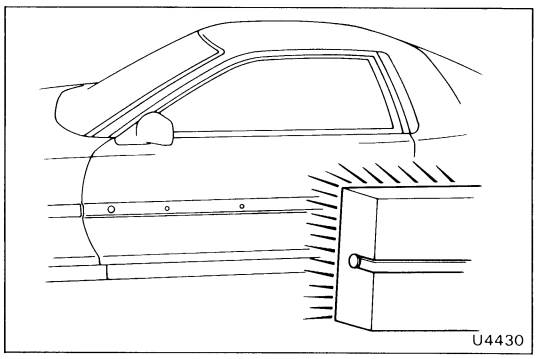

2. CLEAN MOULDING MOUNTING SURFACE

(a) Heat the acrylic formed tape on the body to 40°C – 60°C (104° – 140°F).

NOTICE: Do not touch the acrylic formed tape.

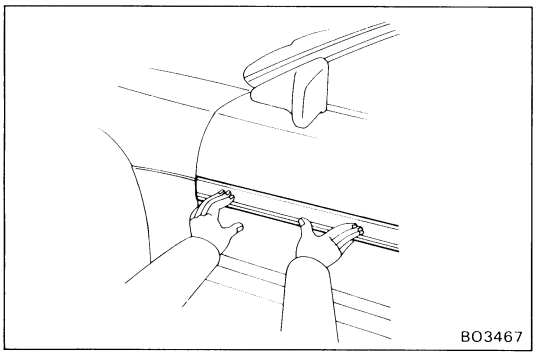

(b) Apply the polyester tape onto the acrylic formed tape and press it equal.

NOTICE: Do not heat the polyester tape.

Perform it quicky as soon as the acrylic formed tape is heated.

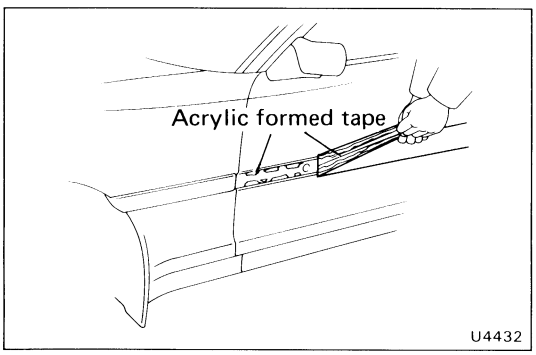

(c) Peel off the polyester tape.

(d) Perform the procedure again until the acrylic formed tape is mostly removed.

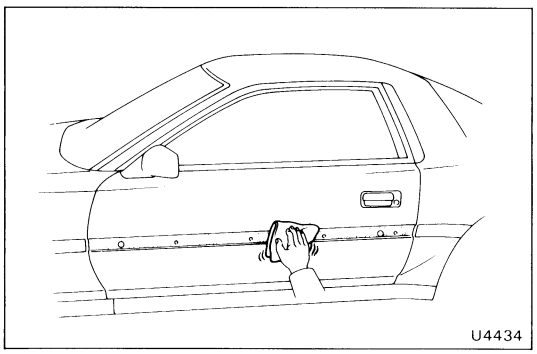

(e) Using cleaner, wipe off stains on the body.

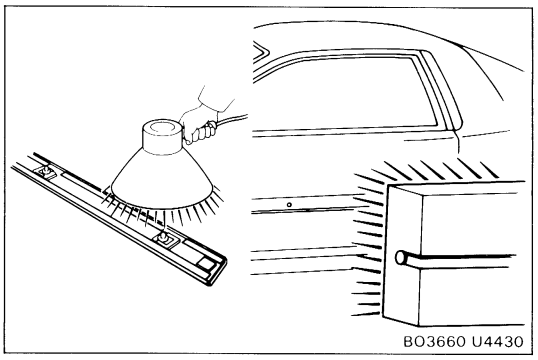

INSTALLATION OF FRONT DOOR OUTSIDE MOULDING

1. HEAT BODY MOUNTING SURFACE AND BODY

(a) Using cleaner, clean the mounting surface of the body.

(b) Using a heat light, heat the body mounting surface and the moulding.

BODY: 40° – 60°C (104° – 140°F)
MOULDING: 20° – 30°C (68° – 86°F)

NOTICE: Do not heat moulding excessively.

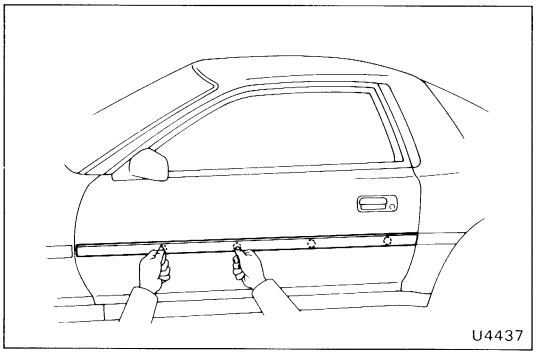

2. INSTALL FRONT DOOR OUTSIDE MOULDING

(a) Lift moulding release sheet from face of moulding.

NOTICE: When the moulding release sheet is removed, be sure that no dirt or dust can get onto the uncovered area.

(b) Tap the moulding onto the clips by hand.

(c) Press the moulding equal by open hand.

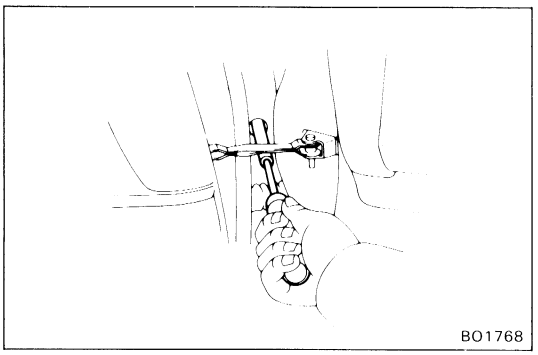

(d) Install a nut.

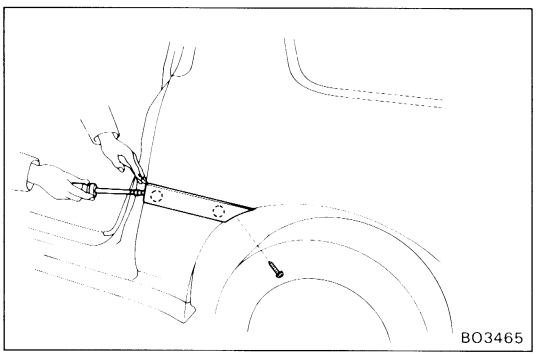

REMOVAL OF QUARTER OUTSIDE MOULDING

REMOVE QUARTER OUTSIDE MOULDING

(a) Remove a rearside clip.

(b) Using a screwdriver, pry off the outside moulding.

HINT: Tape the screwdriver tip before use.

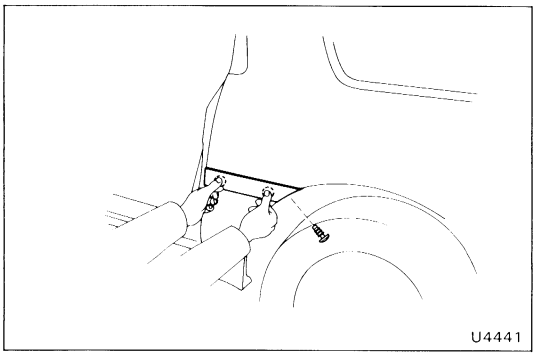

INSTALLATION OF QUARTER OUTSIDE MOULDING

INSTALL QUARTER OUTSIDE MOULDING

(a) Tap the moulding onto the clips by hand.

(b) Install a rearside clip.

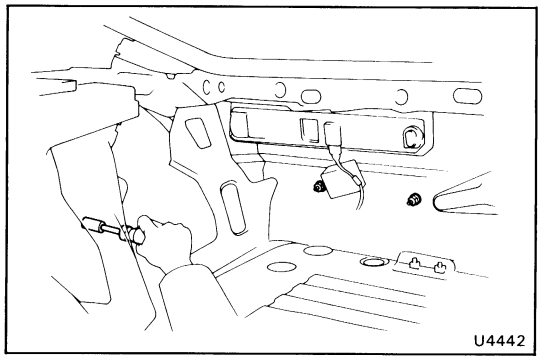

REMOVAL OF QUARTER REAR OUTSIDE MOULDING

1. **REMOVE DECK TRIM SIDE PANEL**
   (See step 6 on page BO-39)

2. **REMOVE QUARTER REAR OUTSIDE MOULDING**
   (a) Remove three nuts.

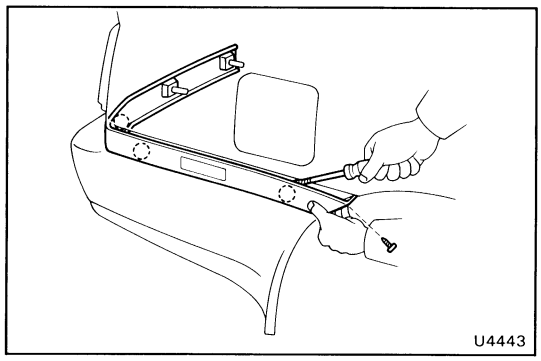

   (b) Remove the screw.
   (c) Using a screwdriver, pry off the outside moulding.
   HINT: Tape the screwdriver tip before use.
   (d) Disconnect the connector.

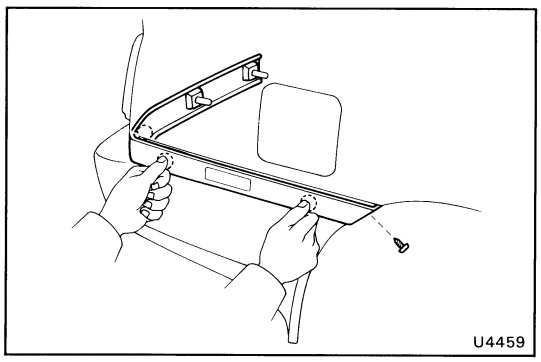

INSTALLATION OF QUARTER REAR OUTSIDE MOULDING

1. **INSTALL QUARTER REAR OUTSIDE MOULDING**
   (a) Connect the connector.
   (b) Tap the moulding onto the clips by hand.
   (c) Install a screw.
   (d) Install three nuts.

2. **INSTALL DECK TRIM SIDE PANEL**
   (See step 6 on page BO-40)

Quarter Window Moulding

REMOVAL OF QUARTER WINDOW MOULDING

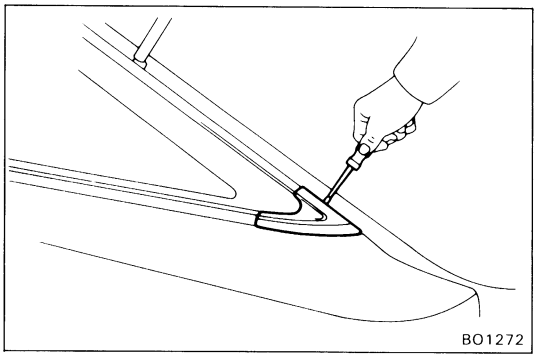

1. **REMOVE LOWER JOINT COVER**

   Remove the screw and joint cover.

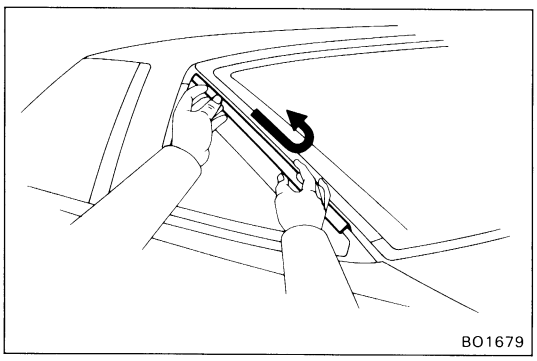

2. **REMOVE UPPER MOULDING**

   Slide the moulding out.

3. **REMOVE UPPER JOINT COVER**

4. **REMOVE LOWER MOULDING**

   (a) Remove the quarter window glass.
   (See pages BO-38 to 39)

   (b) Remove the moulding from the glass.

INSTALLATION OF QUARTER WINDOW MOULDING

1. **INSTALL LOWER MOULDING**

   (a) Install the moulding to the quarter window glass.

   (b) Install the quarter window glass.
   (See page BO-40)

2. **INSTALL UPPER JOINT COVER**

3. **INSTALL UPPER MOULDING**

   Tap the moulding onto the clips by hand.

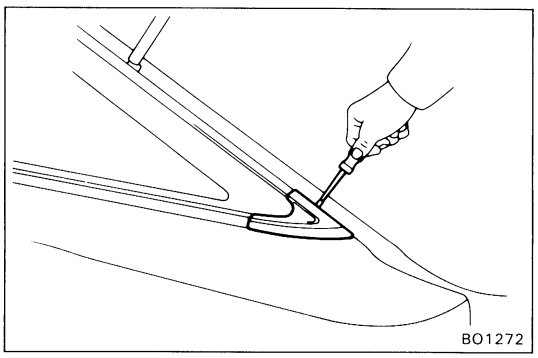

4. **INSTALL LOWER JOINT COVER**

   Install the lower joint cover with a screw.

Back Door Moulding

COMPONENTS

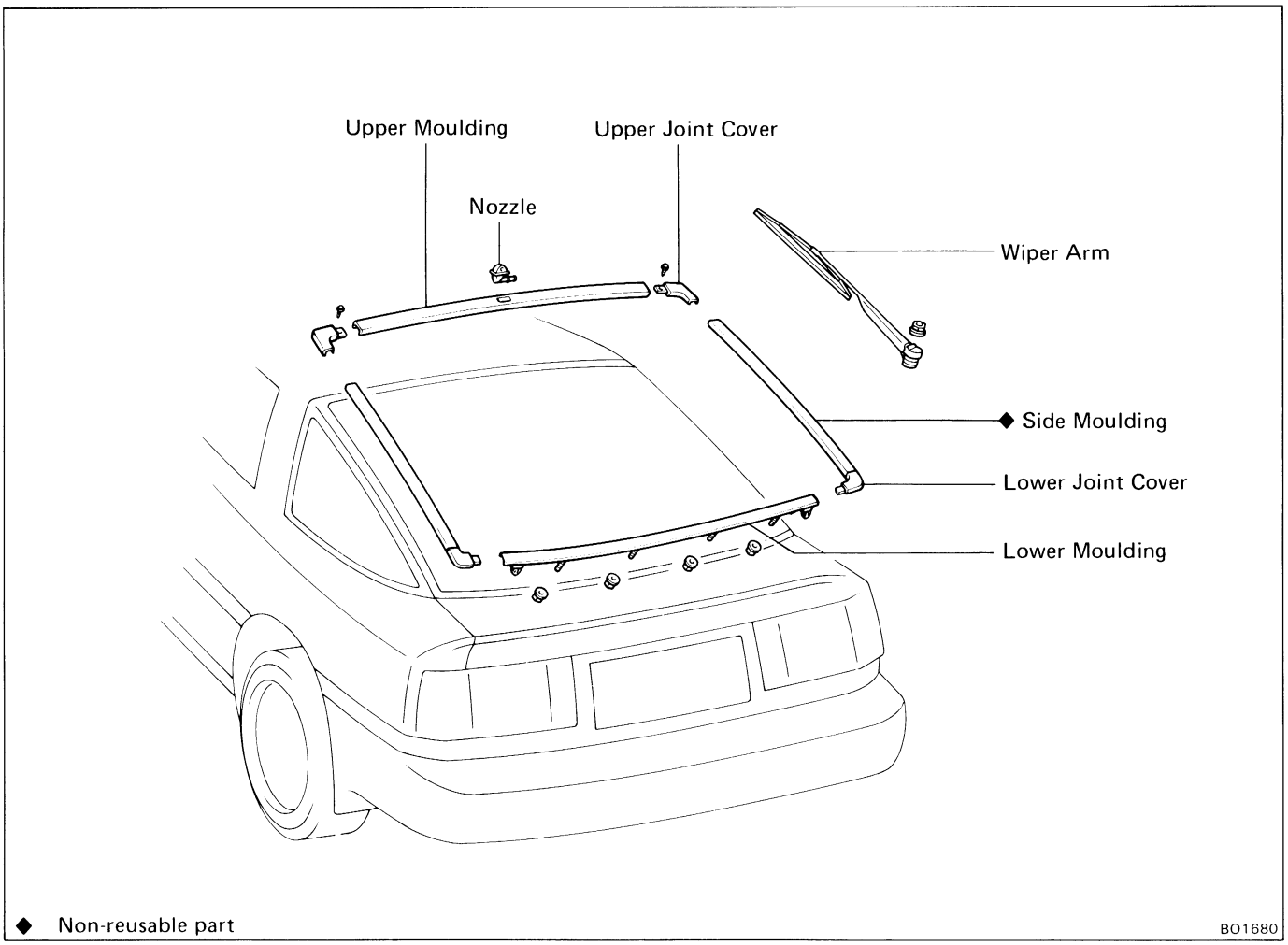

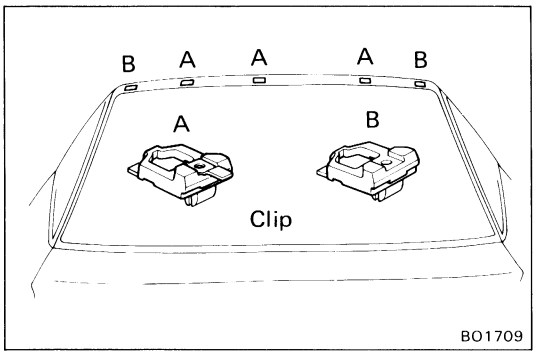

REMOVAL OF BACK DOOR MOULDING

There are two types of clips for moulding installation. Locations of these clips are as shown in the figure. Carefully apply adhesive tape to protect the body.

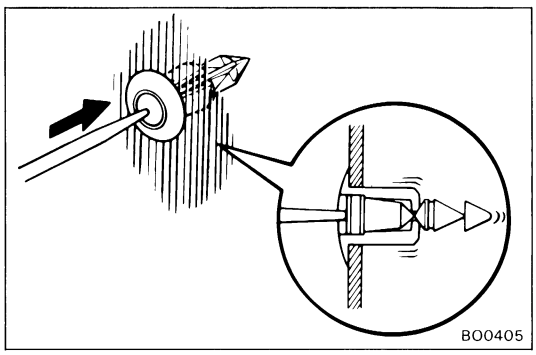

1. **REMOVE REAR WIPER ARM**
2. **REMOVE HIGH MOUNT STOP LIGHT COVER**
   (a) Push on the center of the clip with a thin object to remove it.
   (b) Remove the cover.

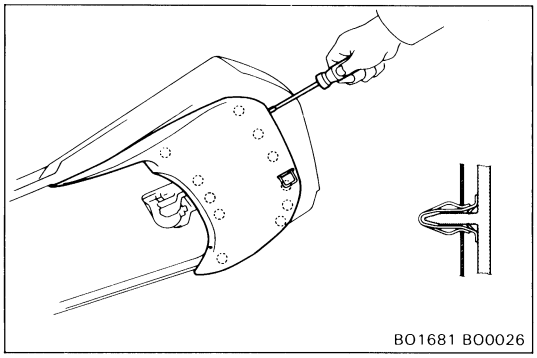

3. REMOVE BACK DOOR TRIM BOARD

(a) Remove the tonneau cover hanger.

(b) Using a screwdriver, pry out the clips and remove the back door trim board.

HINT: Tape the screwdriver tip before use.

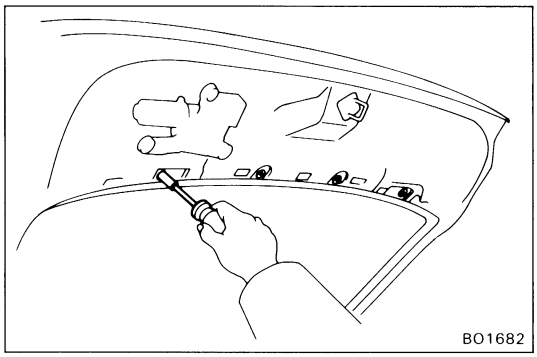

4. REMOVE LOWER MOULDING

(a) Remove four nuts.

(b) Pry loose two clips with a scraper and remove the moulding.

5. REMOVE LOWER JOINT COVERS

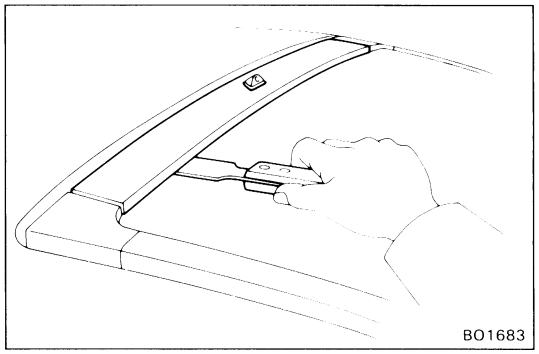

6. REMOVE UPPER MOULDING

(a) Pry loose the clips with a scraper and remove the moulding.

(b) Remove the nozzel from the upper moulding.

7. REMOVE UPPER JOINT COVERS

Remove the clip set screws and joint covers.

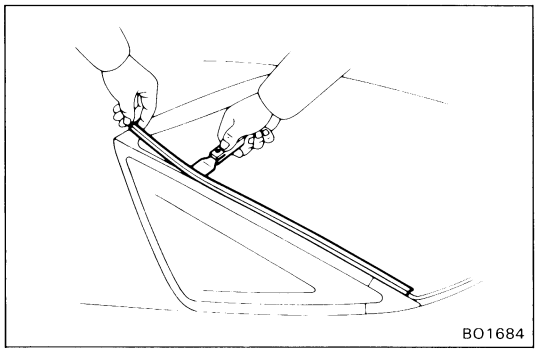

8. REMOVE SIDE MOULDING

Using a scraper, pull off the moulding.

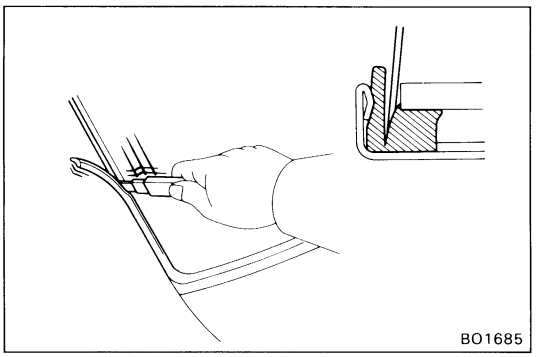

INSTALLATION OF BACK DOOR MOULDING

1. INSTALL SIDE MOULDING

(a) Cut off the old adhesive around the moulding installation area.

(b) Apply the adhesive at the moulding installation area.

(c) Tap the new moulding onto the body flange.

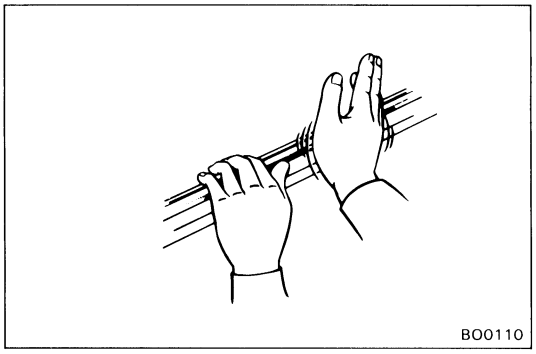

2. INSTALL UPPER JOINT COVERS

Install the joint covers and clip set screws.

3. INSTALL UPPER MOULDING

(a) Install the nozzle and hose to the upper moulding.

(b) Tap the moulding onto the clips by hand.

4. INSTALL LOWER JOINT COVERS

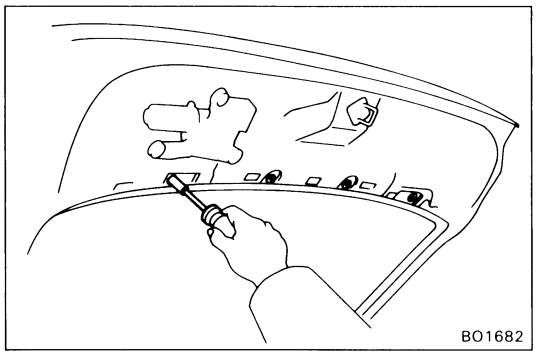

5. INSTALL LOWER MOULDING

(a) Tap the moulding onto the clips by hand.

(b) Install four nuts.

6. INSTALL BACK DOOR TRIM BOARD

7. INSTALL HIGH MOUNT STOP LIGHT COVER

8. INSTALL REAR WIPER ARM

WINDSHIELD

PREPARE ITEMS LISTED

Part Name and No.	Contents of set	Quantity
Adhesive set 08850-00070 (0–15°C or 32–59°F) 08850-00080 (15–35°C or 59–95°F) 08850-00090 (35–45°C or 95–113°F)	Main agent 500 g (17.64 oz.) Hardening agent 75 g (2.65 oz.) Primer G (for glass) 20 g (0.71 oz.) Primer M (for body) 20 g (0.71 oz.) Sponge (for applying primer) Piano wire 0.6 mm dia. x 1 m (0.024 x 39.37 in.) Cartridge	1 ea. 1 ea. 1 ea. 1 ea. 2 ea. 1 ea. 1 set
Dam kit 04562-30040	Dam Double-stick tape (for sticking on dam)	
	Sealant gun (for applying adhesive) Glass of steel sheet (for mixing adhesive) Putty spatula (for mixing adhesive and correcting adhered parts) Cleaner (for cleaning adhering surface)	

Ambient temperature	Part No.	Part name
0 – 15°C (32 – 59°F)	08850-00070	Windshield glass adhesive set No. 15
15 – 35°C (59 – 95°F)	08850-00080	Windshield glass adhesive set No. 35
35 – 45°C (95 – 113°F)	08850-00090	Windshield glass adhesive set No. 45

1. CHOOSE SUITABLE ADHESIVE SET

Use an adhesive set suitable for the ambient temperature.

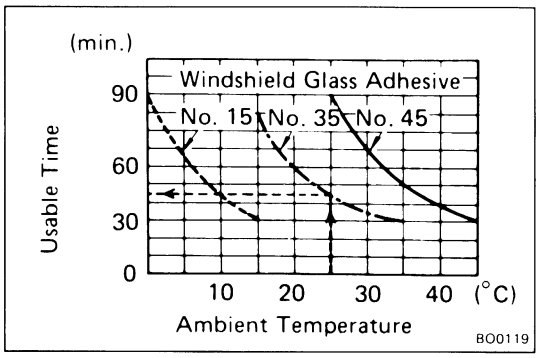

2. CHECK ADHESIVE USABLE TIME

After mixing the main and hardening agents, finish glass installation within the specified time as shown.

Example: For glass installation in ambient temperature of 25°C (77°F), apply adhesive set No.35 within 45 minutes.

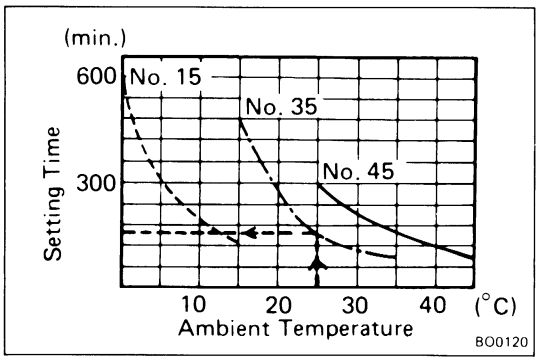

3. CHECK ADHESIVE SETTING TIME

First, mix the main and hardening agents. Then, perform a leak test only after the setting time has elapsed.

Example: The setting time for adhesive set No.35 with an ambient temperature of 25°C (77°F) is 2.5 hours.

NOTICE: Do not drive the vehicle until at least double the setting time has elapsed.

COMPONENTS

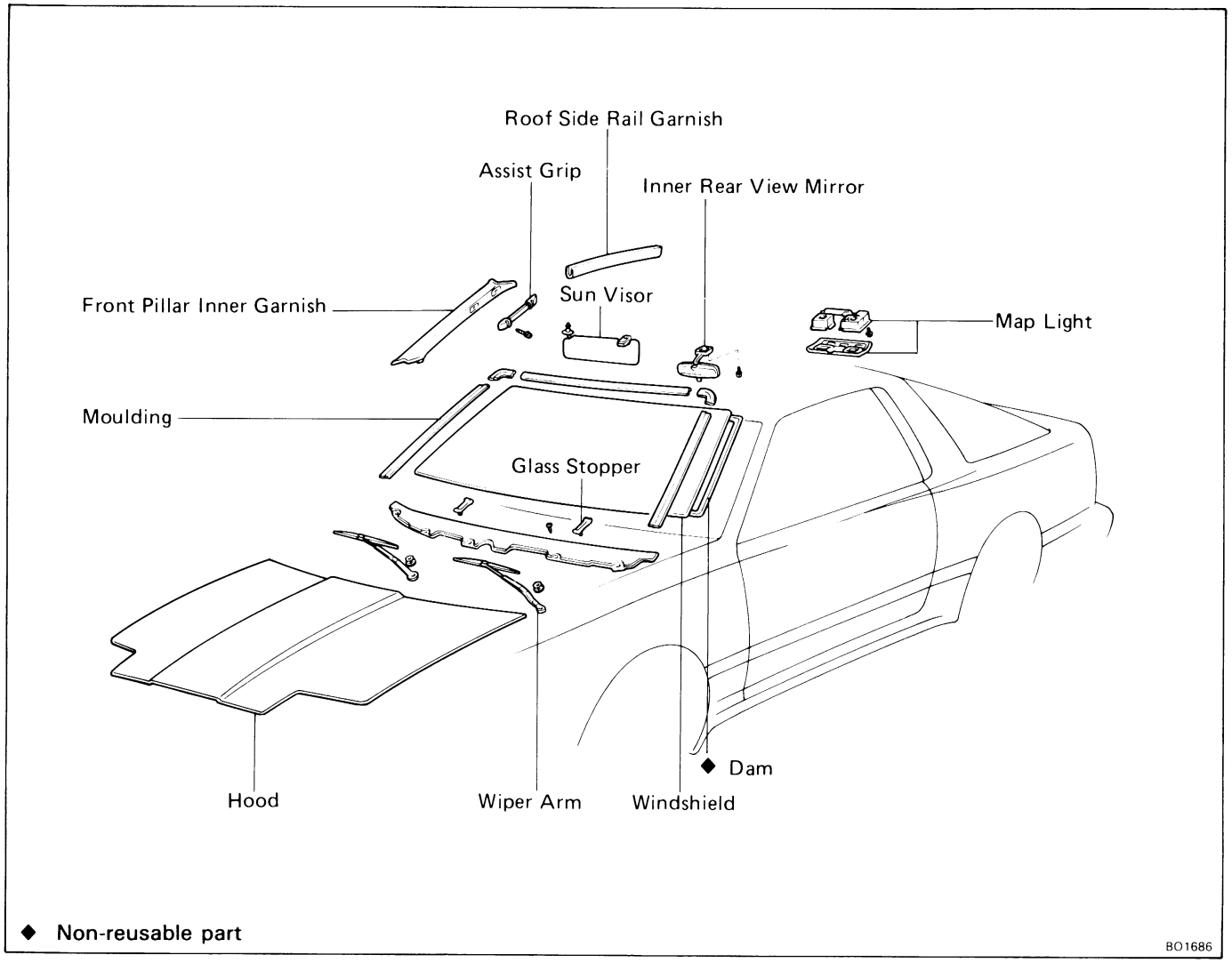

◆ Non-reusable part

REMOVAL OF WINDSHIELD

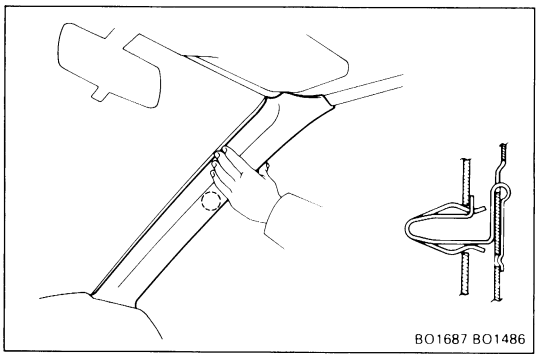

1. **REMOVE FRONT PILLAR INNER GARNISH**
   (a) Remove the assist grips.
   (b) Pry out two clips by your hand.

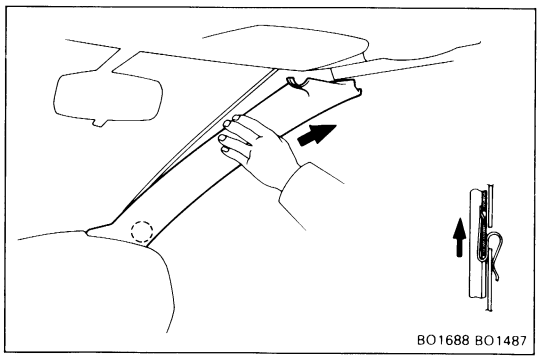

   (c) Pull the garnish upward to remove it.

2. **REMOVE FOLLOWING PARTS:**
   (a) Map light
   (b) Inner rear view mirror
   (c) Sun visors and holders
   (d) Roof side rail garnish
   (e) Hood
   (f) Wiper arms

3. **REMOVE WINDSHIELD MOULDING**
   (See pages BO-17, 18)

4. **REMOVE CLIPS (See page BO-17)**

   Be careful not to damage the clips when removing them from around the glass.

   HINT: It is not necessary to remove the fasteners but damaged fasteners should be replaced.

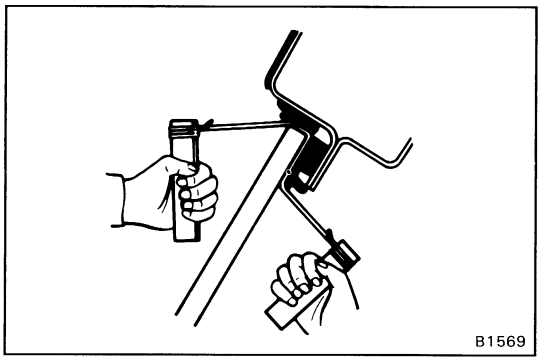

5. **REMOVE WINDSHIELD GLASS**
   (a) Push piano wire through from the interior.
   (b) Tie both wire ends to a wooden block or like object.

   HINT: Apply adhesive tape to the outer surface to keep the surface from begin scratched.

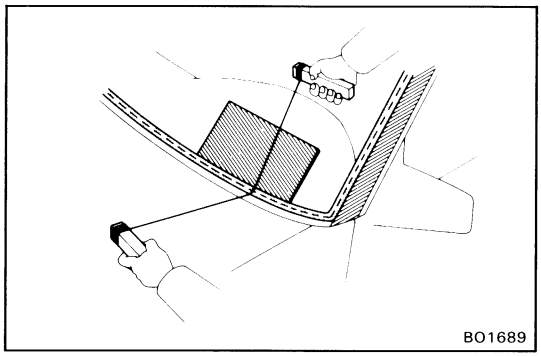

NOTICE: When separating, take care not to damage the paint and interior and exterior ornaments.

To prevent scratching the safety pad when removing the windshield, place a plastic sheet between the piano wire and safety pad.

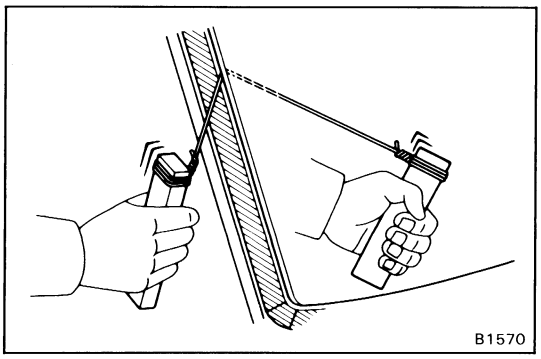

   (c) Cut the adhesive by pulling the piano wire around it.
   (d) Remove the glass.

   NOTICE: Cut off the glass, leaving as much of the adhesive layer on the body as possible.

PREPARATION OF INSTALLATION

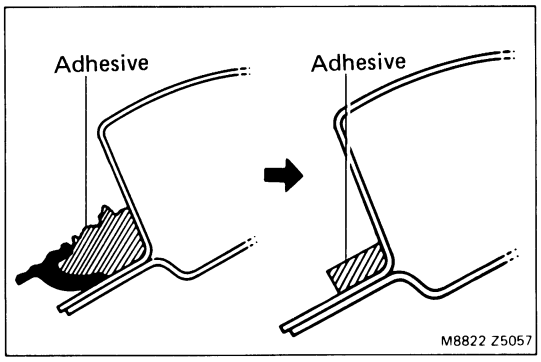

1. CLEAN AND SHAPE CONTACT SURFACE OF BODY

(a) Remove any dam remaining on the body.

(b) Cut away any rough areas with a knife.

HINT: Leave as much adhesive layer on the body as possible.

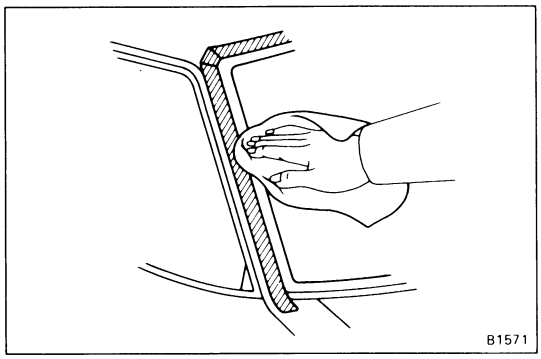

(c) Clean the cut surface of the adhesive with a piece of cloth saturated in cleaner.

HINT: Even if all the adhesive has been removed, clean the body.

2. IF NECESSARY, REPLACE FASTENERS
(See page BO-18)

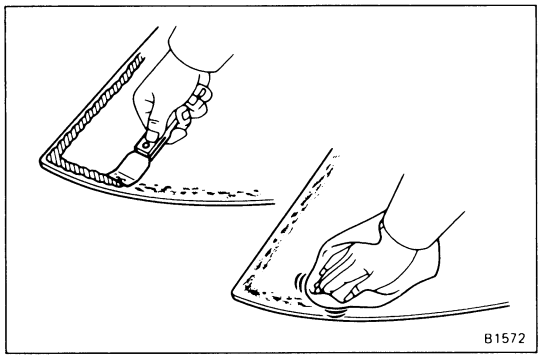

3. CLEAN REMOVED GLASS BEFORE INSTALLATION

(a) Using a scraper, remove the adhesive sticking to the glass.

(b) Clean the glass with a piece of cloth in saturated in cleaner.

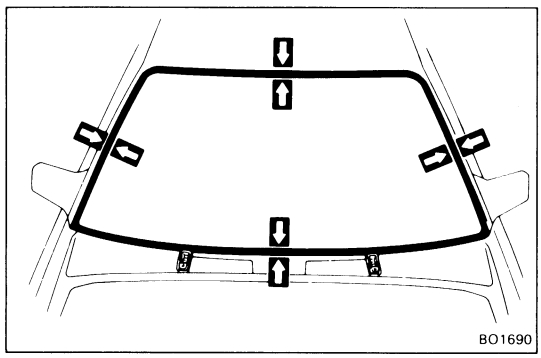

4. POSITION GLASS

(a) Place the glass with the stoppers onto the body in correct position.

(b) Check that all contacting parts of the glass rim are perfectly even and do not make contact with the moulding fasteners.

(c) Make reference marks between the glass and body.

(d) Remove the glass.

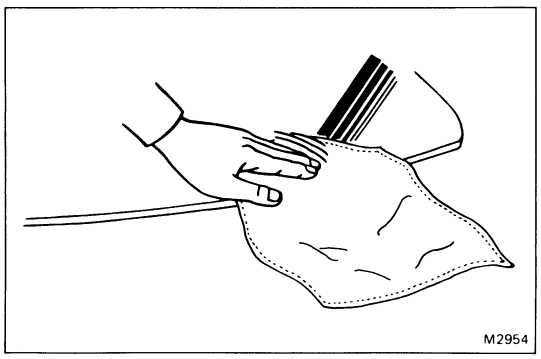

5. CLEAN CONTACT SURFACE OF GLASS

Using cleaner, clean the contact surface 15 — 30 mm (0.59 — 1.18 in.) wide on the entire glass rim.

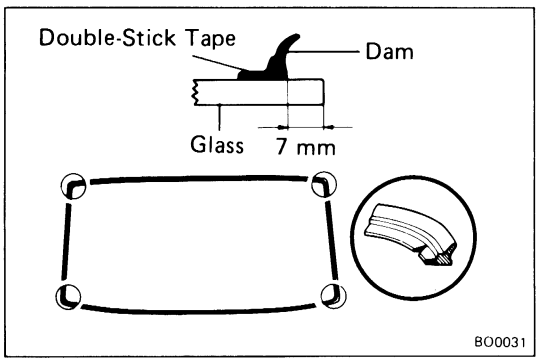

INSTALLATION OF WINDSHIELD

1. INSTALL DAM

(a) Apply double-stick tape at a point 7 mm (0.28 in.) from the glass rim.

(b) Place the dam on the double-stick tape.

HINT: Cut a V-wedge into the corner folds of the dam.

NOTICE: Do not touch the glass face after cleaning it.

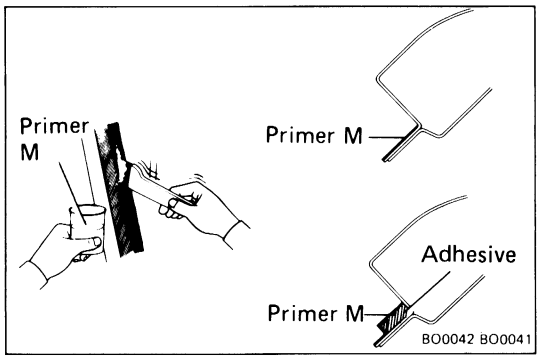

2. COAT CONTACT SURFACE OF BODY WITH PRIMER "M"

Using a brush, coat the contact surface on the body with primer M.

NOTICE:

- **Let the primer coating dry for 10 minutes or more. Make sure that the installation of the glass is finished within 2 hours.**
- **Use care not to leave any part of the contact surface uncoated or excessively coated, as Primer "M" and "G" serve to boost the adhesive power of the adhesive to the glass or body.**
- **Do not keep any of the opened primer M and G for later use.**

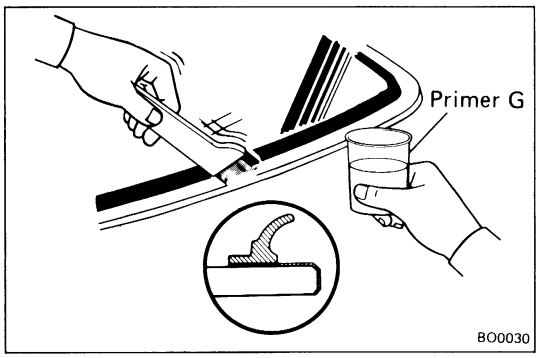

3. COAT CONTACT SURFACE OF GLASS WITH PRIMER "G"

(a) Using a brush or sponge, coat the edge of the glass and contact surface with primer G.

(b) Before the primer dries, wipe any excess off with a clean cloth to avoid too thick a coat.

NOTICE: Be sure that installation of the glass is finished within 70 minutes.

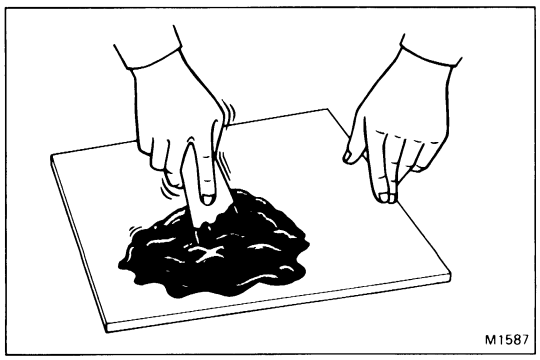

4. MIX ADHESIVE COATING

NOTICE:

- **Be sure that installation of the glass is finished within usable time.(See step 2 on page BO-31)**
- **Mixture should be made in 5 minutes or less.**

(a) Thoroughly clean the glass plate and putty spatula with solvent.

(b) Using a putty spatula, thoroughly mix 500 g (17.64 oz.) of the main and 75 g (2.65 oz.) of the hardening agents on a glass plate or such.

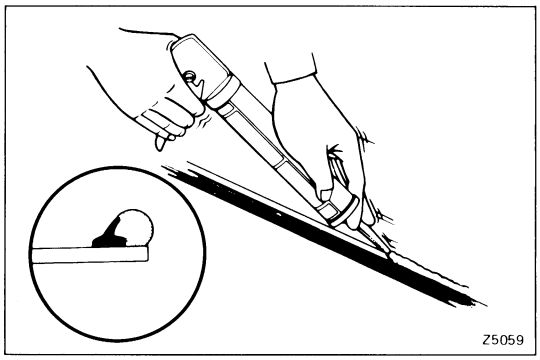

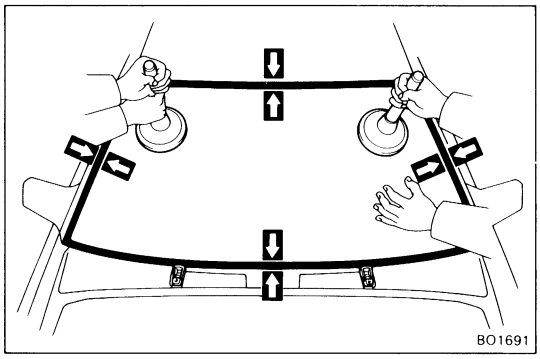

5. **APPLY ADHESIVE**

(a) Cut off the tip of the cartridge nozzle, making a hole 5 mm (0.20 in.) in diameter. Fill the cartridge with adhesive.

(b) Load the cartridge into the sealer gun.

(c) Coat the glass with adhesive on all contact surfaces along the ridge.

Adhesive height:

If there is adhesive on body	**3.5 — 5.0 mm (0.138 — 0.197 in.)**
If there is no adhesive on body	**8 — 10 mm (0.31 — 0.39 in.)**

6. **INSTALL WINDSHIELD GLASS**

(a) Position the glass so that reference marks are lined up, and press in gently along the rim.

(b) Using a spatula, apply adhesive to the glass rim.

(c) Use a spatula to remove any excess or protruding adhesive.

(d) Fasten the glass securely until the adhesive sets.

7. **INSPECT FOR LEAKS AND REPAIR**

(a) Perform a leak test after the setting time has elapsed.

(b) Seal any leaks with auto glass sealer.

Part No. 08833-00030 or equivalent

8. **INSTALL WINDSHIELD MOULDING**
(See page BO-18)

9. **INSTALL FOLLOWING PARTS:**

(a) Wiper arms

(b) Hood

(c) Roof side rail garnish (w/o sport roof)

(d) Sun visors and holders

(e) Inner rear view mirror

(f) Map light

10. **INSTALL FRONT PILLAR GARNISH AND ASSIST GRIP**
(See step 1 on page BO-32)

11. **INSTALL AND ADJUST HOOD**
(See page BO-3)

NOTICE: Wait at least twice the setting time before driving the car.

QUARTER WINDOW GLASS

PREPARE ITEMS LISTED

Part Name and No.	Contents of Set
Butyl tape set (08850-00065)	Butyl tape 9 mm dia. x 2,500 mm (0.35 x 98.43 in.) Primer 5 cc (0.17 fl.oz.) Sponge (for applying primer) Piano wire 1 mm dia. x 600 mm (0.04 x 23.62 in.)(for slicing off glass)
Materials required	Cleaner (for cleaning adhering surfaces)

COMPONENTS

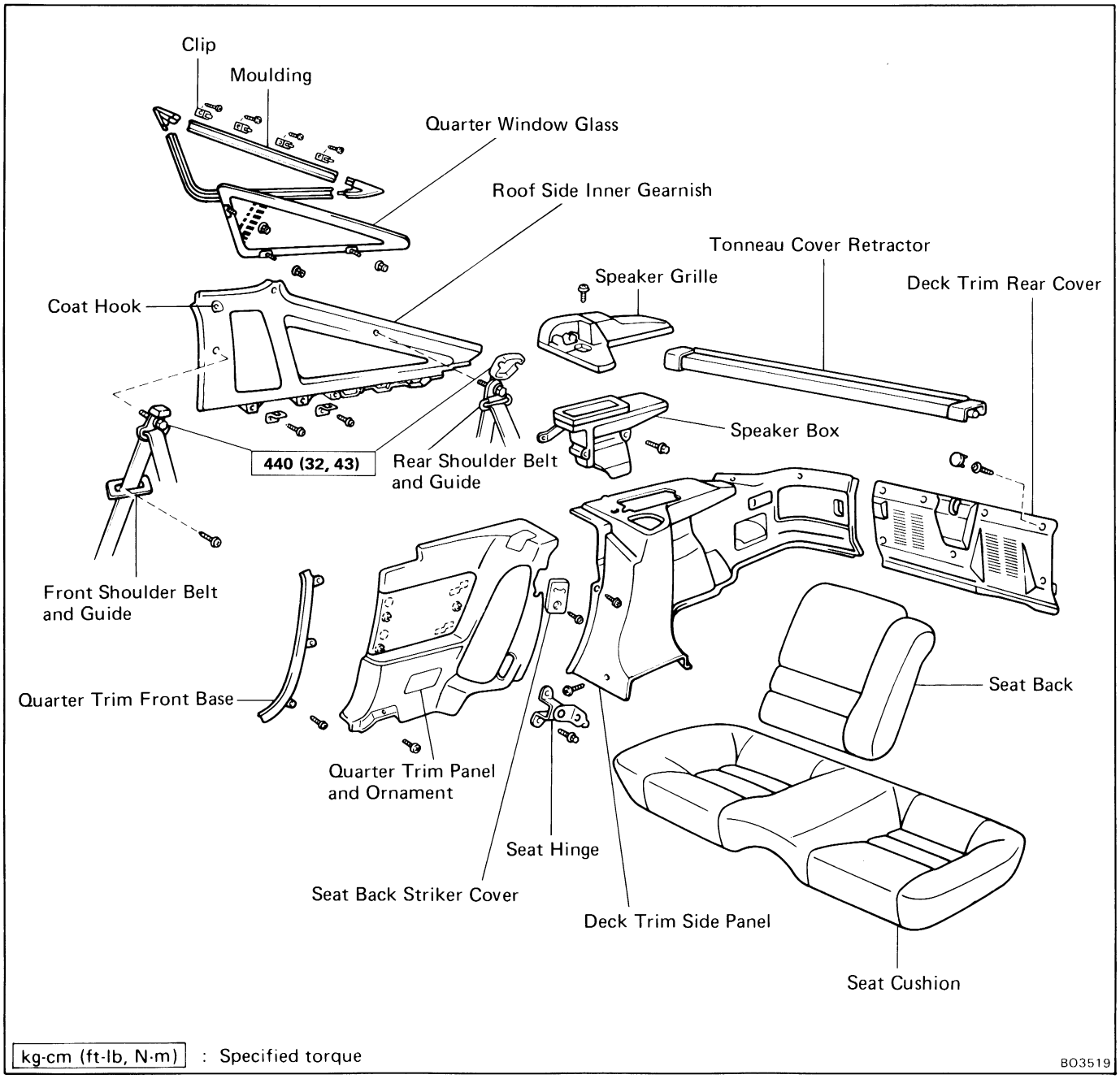

REMOVAL OF QUARTER WINDOW GLASS

1. **REMOVE FOLLOWING PARTS:**
   (a) Tonneau cover retractor
   (b) Deck trim rear cover

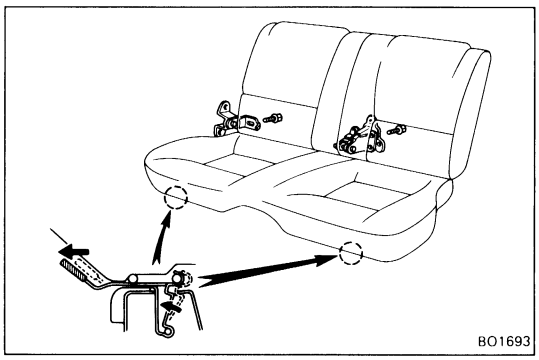

2. **REMOVE REAR SEAT CUSHION AND BACK**

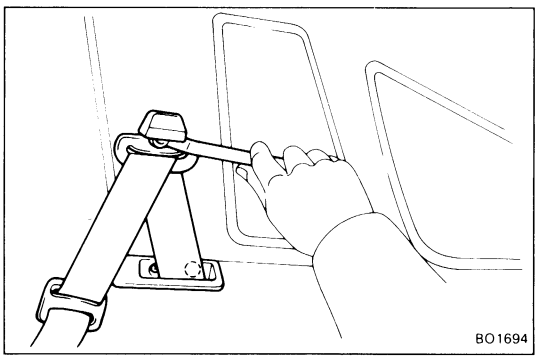

3. **REMOVE FRONT SHOULDER BELT ANCHOR BOLT AND BELT GUIDE**
   (a) Remove the front shoulder belt anchor bolt.
   (b) Remove the belt guide set screw and guide.

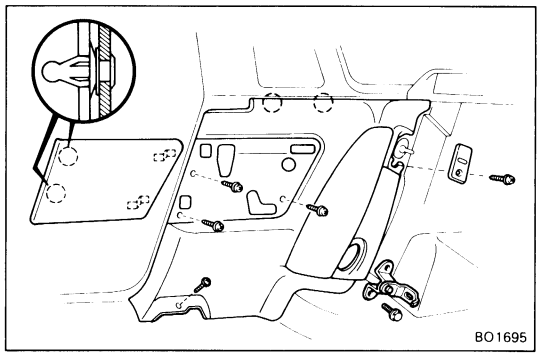

4. **REMOVE QUARTER TRIM PANEL**
   (a) Remove the screw and the seat back striker cover.
   (b) Using a screwdriver, remove the quarter trim ornament.
   (c) Remove four screws.
   (d) Using the screwdriver, remove the quarter trim.
   HINT: Tape the screwdriver tip before use.

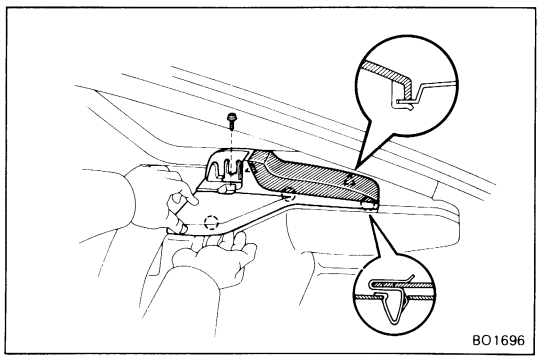

5. **REMOVE SPEAKER GRILLE**
   (a) Remove the screw.
   (b) Pry the three clips, and remove the speaker grille.

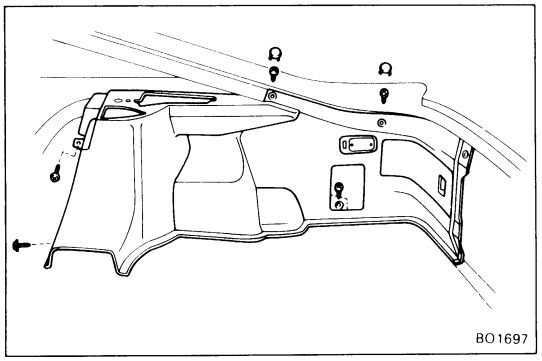

6. REMOVE DECK TRIM SIDE PANEL AND SPEAKER BOX

(a) Remove five screws and the deck side trim.

(b) Remove three screws and the speaker box.

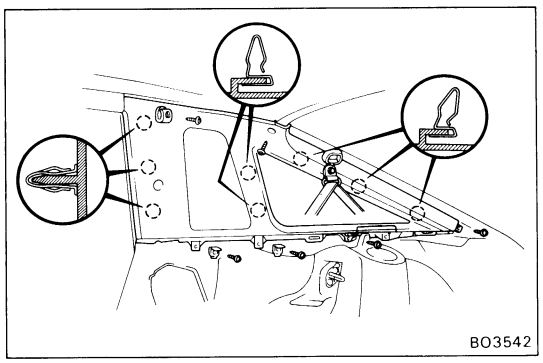

7. REMOVE REAR SHOULDER BELT ANCHOR BOLT AND BELT GUIDE

8. REMOVE ROOF SIDE INNER GARNISH

(a) Remove the screw and the hook.

(b) Remove four screws.

(c) Using a screwdriver, pry the clips and remove the roof side inner garnish.

HINT: Tape the screwdriver tip before use.

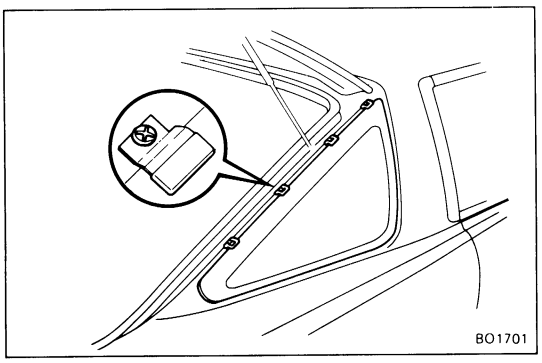

9. REMOVE QUARTER WINDOW GLASS MOULDING
(See page BO-27)

10. REMOVE QUARTER WINDOW GLASS

(a) Remove the four upper retainers.

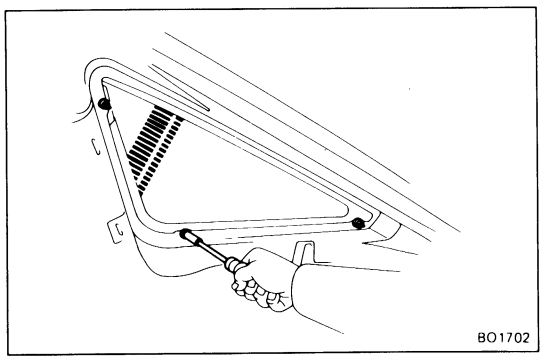

(b) Remove the retainer nuts.

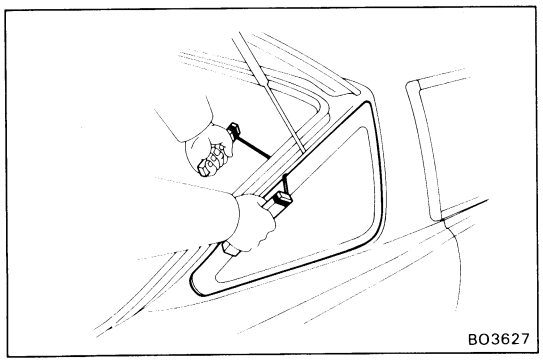

(c) Using piano wire, cut loose the adhesive.

(d) Remove the glass.

NOTICE: Do not damage the clips and the body.

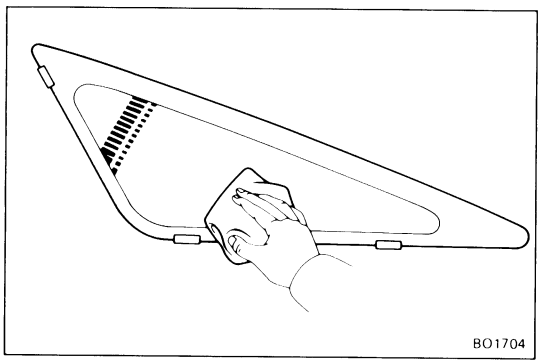

INSTALLATION OF QUARTER WINDOW GLASS

1. **CLEAN BODY OR GLASS**

   Wipe off any adhesive left on the body or glass with cleaner.

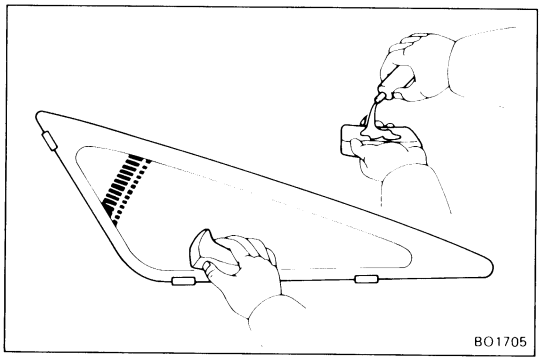

2. **INSTALL QUARTER WINDOW GLASS**

   (a) Using a sponge, apply the primer around the entire ceramic application area.

   HINT: Apply primer evenly and to the ceramic application area only.

   (b) Let the primer coating dry for 10 minutes.

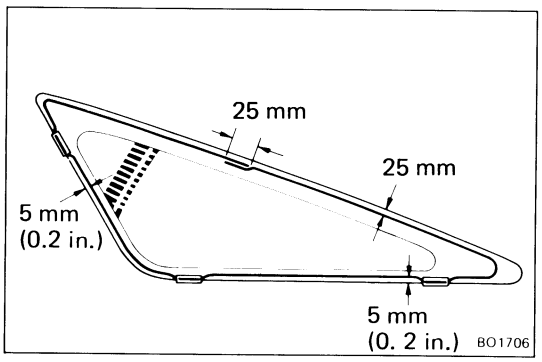

   (c) Install the seal to the glass.

   HINT: Overlap the seal approx. 25 mm (0.98 in.) at the bottom of the glass.

   (d) Install the lower outside moulding to the glass.

   (e) Install the four upper retainer.

   (f) Install the window glass to the body.

   (g) Install the retainer nuts.

3. **INSTALL QUARTER WINDOW GLASS MOULDING (See page BO-27)**

4. **INSTALL ROOF SIDE INNER GARNISH (See page BO-39)**

5. **INSTALL REAR SHOULDER BELT ANCHOR BOLT AND BELT GUIDE**

6. **INSTALL SPEAKER BOX AND DECK TRIM SIDE PANEL (See page BO-39)**

7. **INSTALL SPEAKER GRILLE (See page BO-38)**

8. **INSTALL QUARTER TRIM PANEL AND SEAT BACK HINGE (See page BO-38)**

9. **INSTALL FRONT SHOULDER BELT ANCHOR BOLT AND BELT GUIDE (See page BO-38)**

   Torque: 440 kg-cm (32 ft-lb, 43 N·m)

10. **INSTALL REAR SEAT BACK AND CUSHION (See page BO-38)**

11. **INSTALL DECK TRIM REAR COVER AND TONNEAU COVER RETRACTOR**

BACK DOOR GLASS

PREPARE ITEMS LISTED

(See page BO-31)

COMPONENTS

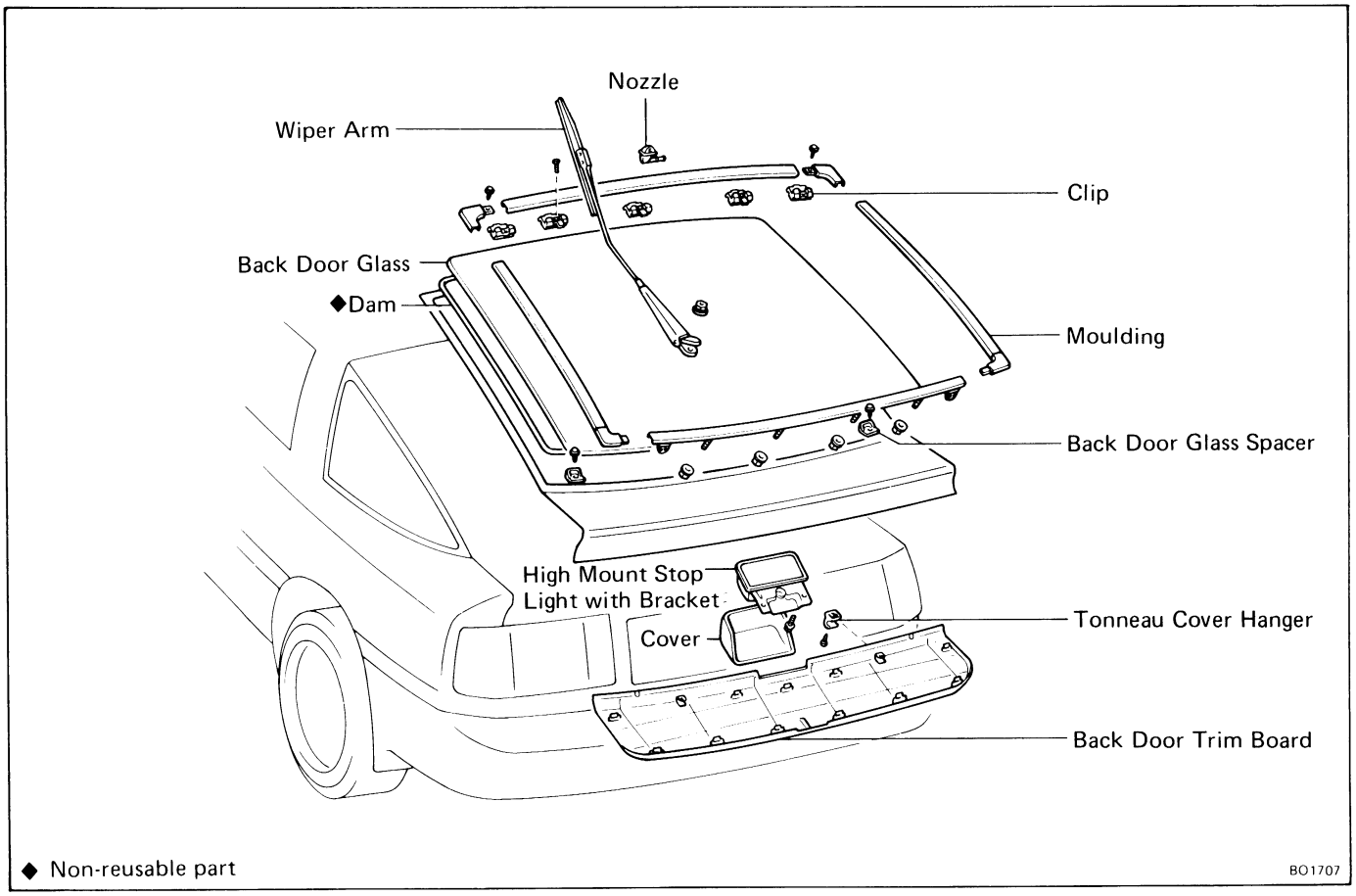

REMOVAL OF BACK DOOR GLASS

1. **REMOVE HIGH MOUNT STOP LIGHT COVER**
   (See step 2 on page BO-28)

2. **REMOVE BACK DOOR TRIM BOARD**
   (See step 3 on page BO-28)

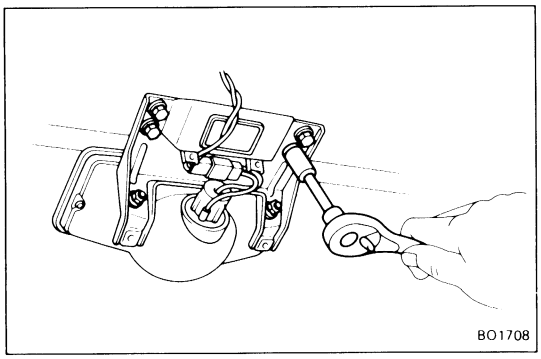

3. **REMOVE HIGH MOUNT STOP LIGHT**
   (a) Remove the set bolts.
   (b) Remove the wire connector from the high mount stop light bracket.

4. **DISCONNECT DEFOGGER WIRE CONNECTORS**

5. **REMOVE REAR WIPER ARM**

6. **REMOVE BACK DOOR MOULDING AND CLIPS**
(See pages BO-28, 29)

7. **REMOVE BACK DOOR GLASS**

HINT: Remove the glass in the same manner as the windshield. (See step 5 on page BO-32)

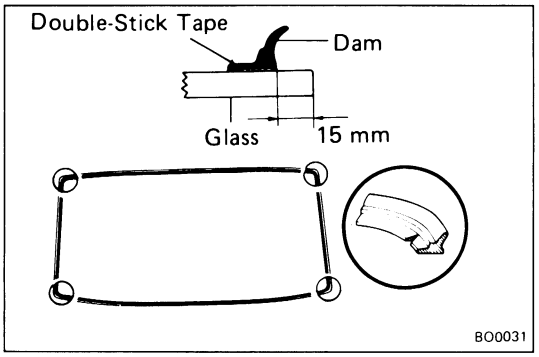

INSTALLATION OF BACK DOOR GLASS

1. **CLEAN BODY AND GLASS**
(See page BO-34)

2. **INSTALL BACK DOOR GLASS**

(a) Install the dam;

Apply double-stick tape at a point 15 mm (0.59 in.) from the glass rim.

(b) Place the dam on the double-stick tape.

HINT: Cut a V-wedge into the corner folds of the dam.

NOTICE: Do not touch the glass after cleaning it.

(c) Install the two back door glass spacers.

(d) Install the glass in the same manner as the windshield. (See page BO-35)

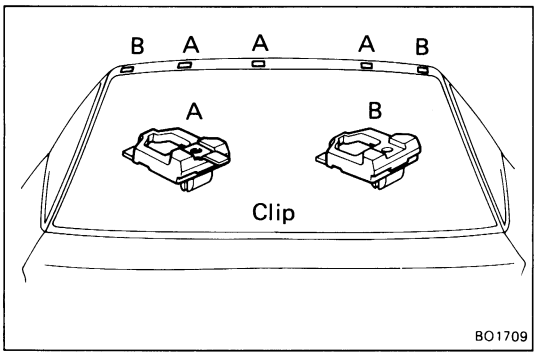

3. **INSTALL UPPER MOULDING CLIPS**

4. **INSTALL BACK DOOR MOULDING**
(See page BO-30)

5. **INSTALL REAR WIPER ARM**

6. **CONNECT DEFOGGER WIRE CONNECTORS**

7. **INSTALL HIGH MOUNT STOP LIGHT**

8. **INSTALL BACK DOOR TRIM BOARD**

9. **INSTALL HIGH MOUNT STOP LIGHT COVER**

SPORT ROOF

COMPONENTS

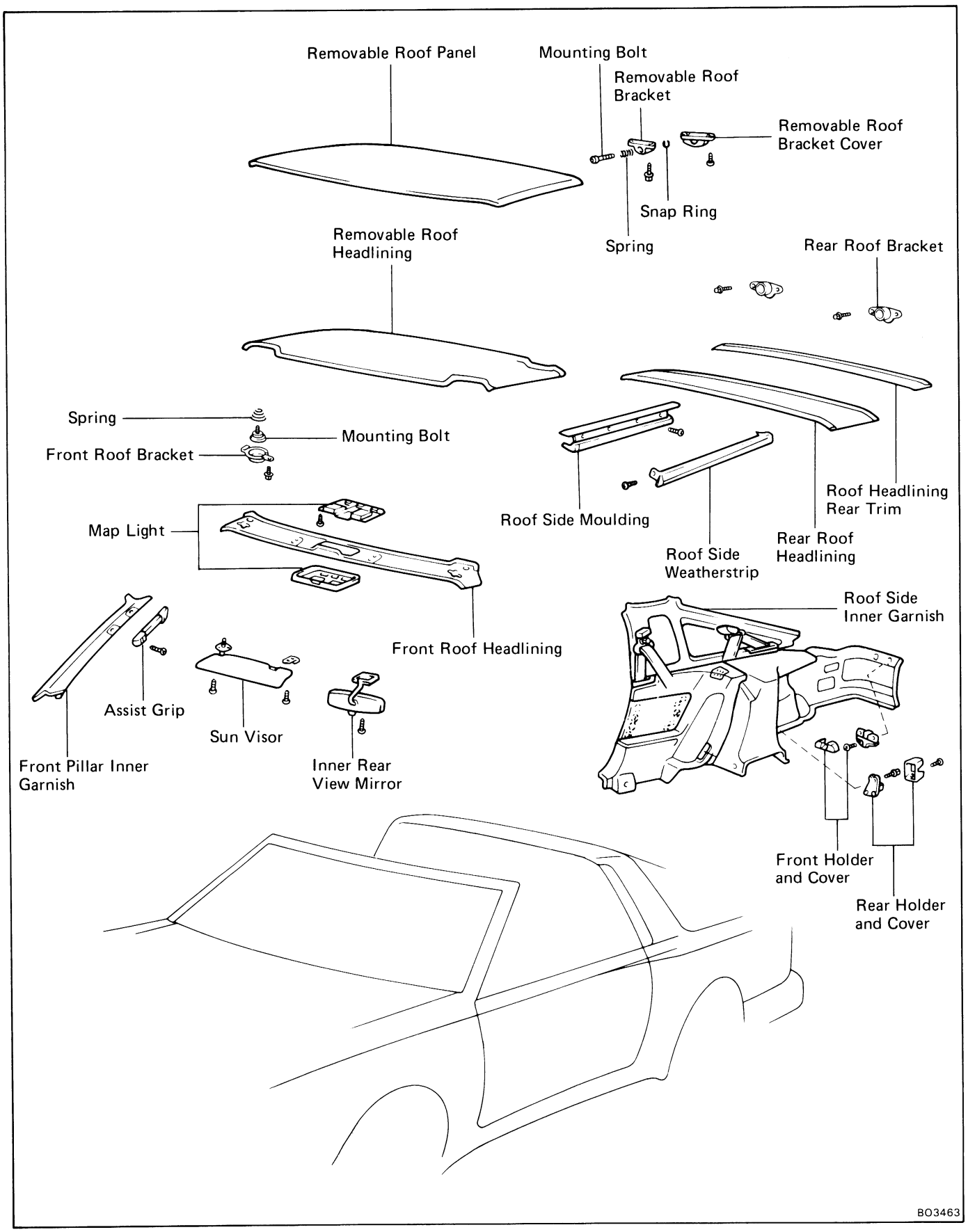

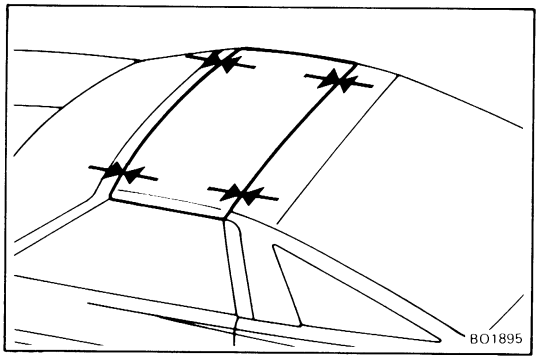

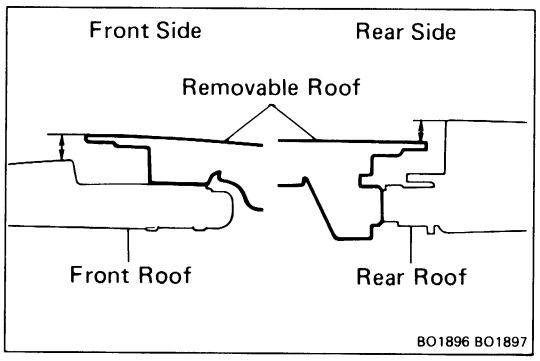

ON-VEHICLE INSPECTION

INSPECT REMOVAL ROOF PANEL ALIGNMENT

(a) With the removable roof installed, check for water leakage.

(b) Check for a difference in clearance and level between the removable roof panel and roof panel.

Clearance:

Front side 6.0 ± 2 mm (0.236 ± 0.08 in.)
Rear side 6.5 ± 0.2 mm (0.256 ± 0.008 in.)
Left and right side Less than 2 mm (0.08 in.)

Level:

Front side $0^{+1.5}_{-2.0}$ **mm** ($0^{+0.059}_{-0.079}$ **in.**)

Rear side 0 ± 1.5 mm (0 ± 0.059 in.)

ADJUSTMENT OF REMOVABLE ROOF

1. REMOVE REMOVABLE ROOF HEADLINING
(See page BO-47)

2. REMOVE REAR ROOF HEADLINING
(See page BO-46)

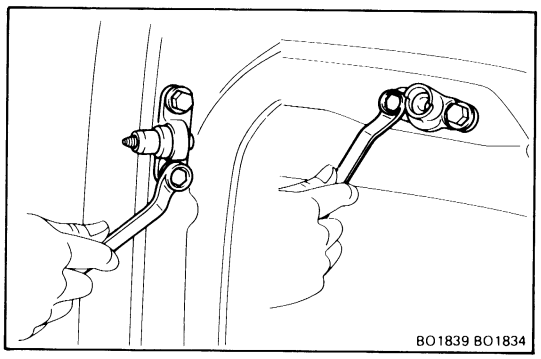

3. ADJUST CLEARANCE

Adjust by loosening the removable roof bracket bolts and rear bracket bolts, and move the removable roof to the forward and rearward.

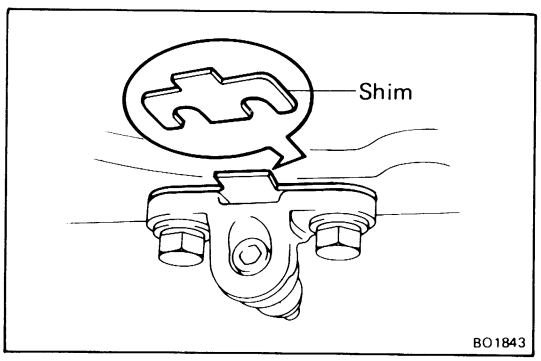

4. ADJUST LEVEL

Select the shim that makes the level difference between the rear side of removable roof panel and rear roof panel minimum.

Thickness mm (in.)
1.0 (0.039)
2.0 (0.079)

5. INSTALL REAR ROOF HEADLINING
(See page BO-47)

6. INSTALL REMOVABLE ROOF HEADLINING
(See page BO-48)

Front Roof Bracket

REMOVAL OF FRONT ROOF BRACKET

(See page BO-43)

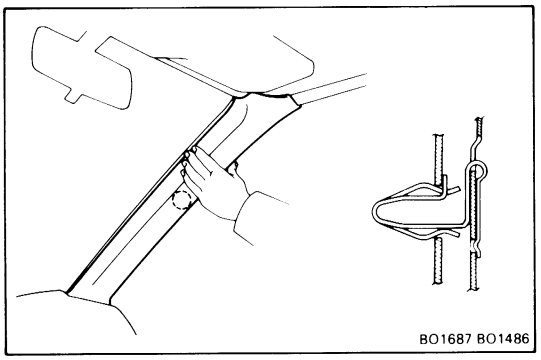

1. REMOVE FRONT PILLAR INNER GARNISH
   (a) Remove the assist grips.
   (b) Pry out the two clips by your hand.
   (c) Pull the garnish upward to remove it.

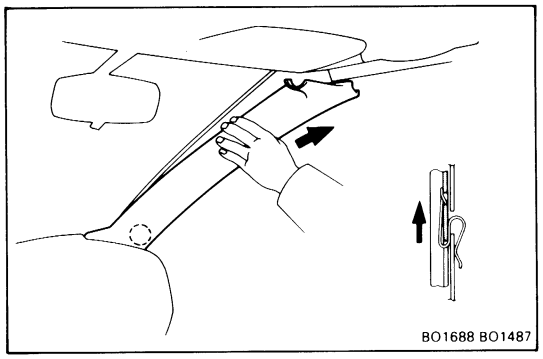

2. REMOVE FOLLOWING PARTS:
   (a) Map light
   (b) Inner rear view mirror
   (c) Sun visors and holders

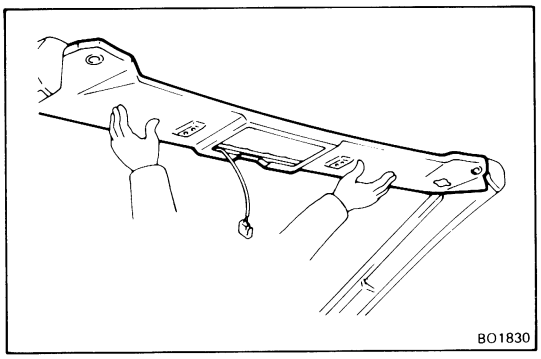

3. REMOVE FRONT ROOF HEADLINING

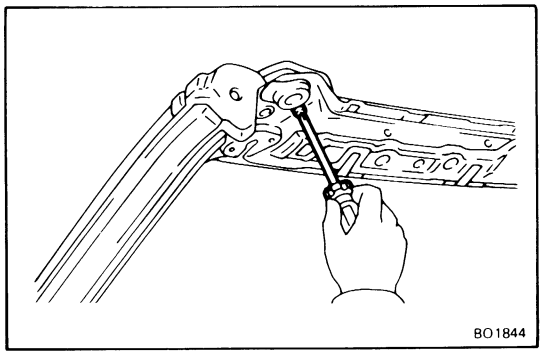

4. REMOVE FRONT ROOF BRACKET
   Remove the front roof bracket with the mounting bolt and spring.

INSTALLATION OF FRONT ROOF BRACKET

(See page BO-43)

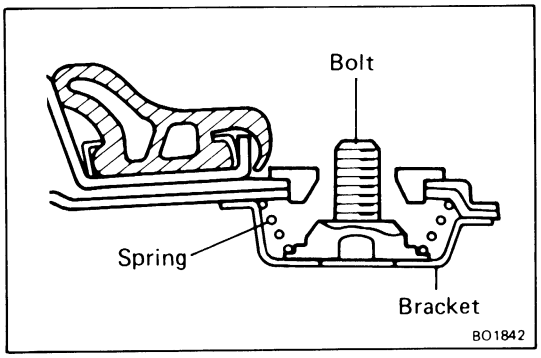

1. INSTALL FRONT BRACKET
   Install the spring, mounting bolt and bracket as shown.
2. INSTALL FRONT ROOF HEADLINING
3. INSTALL FOLLOWING PARTS:
   (a) Sun visors and holders
   (b) Inner rear view mirror
   (c) Map light
4. INSTALL FRONT PILLAR INNER GARNISH

Rear Roof Bracket

REMOVAL OF REAR ROOF BRACKET

(See page BO-43)

1. REMOVE REMOVABLE ROOF

   HINT: Before removal, measure and memorize the clearance and level.

2. REMOVE ROOF HEADLINING REAR TRIM

   Remove the two screws and rear trim.

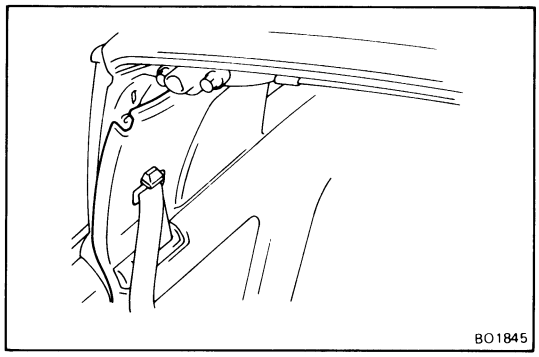

3. DISCONNECT ROOF SIDE INNER GARNISH

   Disconnect the upper side of inner garnish to make the clearance between the inner garnish and roof headlining.

   HINT: Do not damage, the inner garnish.

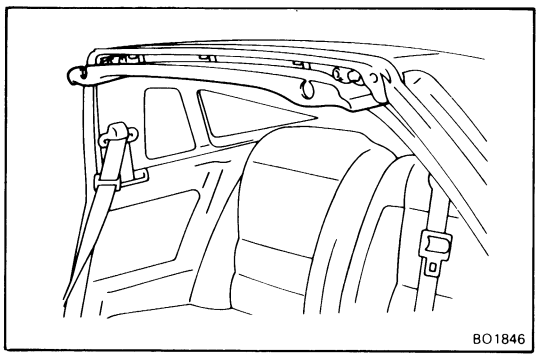

4. REMOVE REAR ROOF HEADLINING

   Slide the rear roof headlining forward.

   HINT: Do not damage the roof headlining.

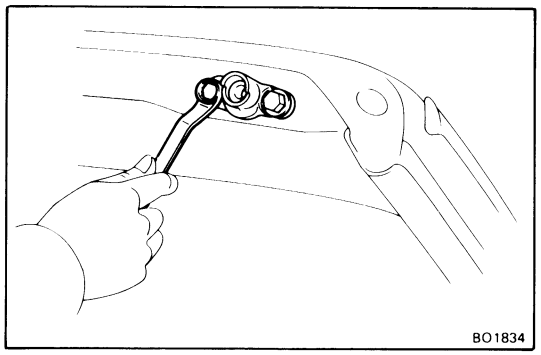

5. REMOVE REAR ROOF BRACKET

INSTALLATION OF REAR ROOF BRACKET

(See page BO-43)

1. ADJUST REMOVABLE ROOF
   (See page BO-44)

2. INSTALL REAR ROOF BRACKET

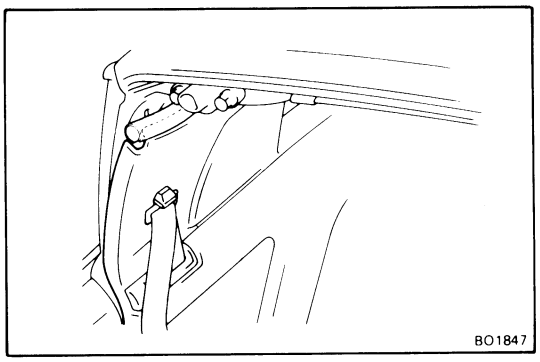

3. **INSTALL REAR ROOF HEADLINING**

To prevent rear roof headlining damage, cover the upper side inner garnish with a piece of vinyl hose or such.

HINT: Do not damage the rear roof headlining.

4. **CONNECT ROOF SIDE INNER GARNISH**

5. **INSTALL ROOF HEADLINING REAR TRIM**

6. **INSTALL REMOVABLE ROOF**

Removable Roof

REMOVE REMOVABLE ROOF

(See page BO-43)

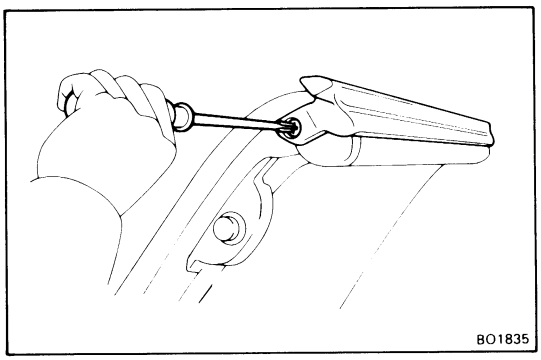

1. **REMOVE REMOVABLE ROOF SIDE MOULDING**

(a) Using a screwdriver, remove the screw and weather-strip.

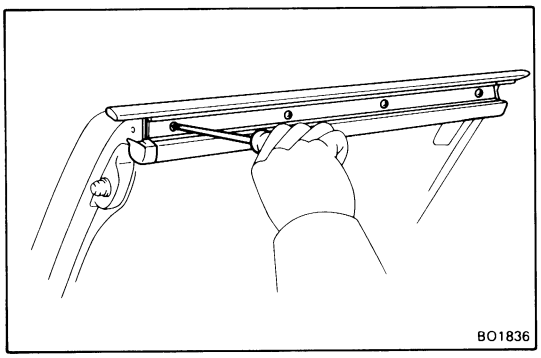

(b) Remove the roof side moulding and four screws.

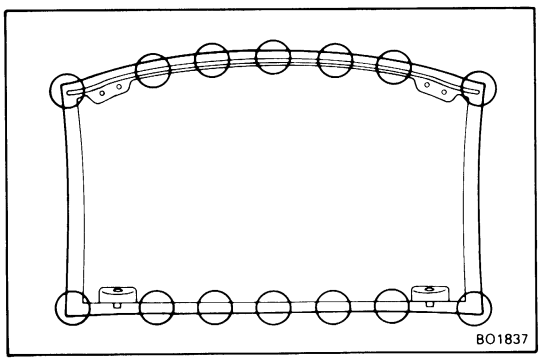

2. **REMOVE REMOVABLE ROOF HEADLINING**

Remove the roof headlining ornament.

HINT: Tape the screwdriver tip before using.

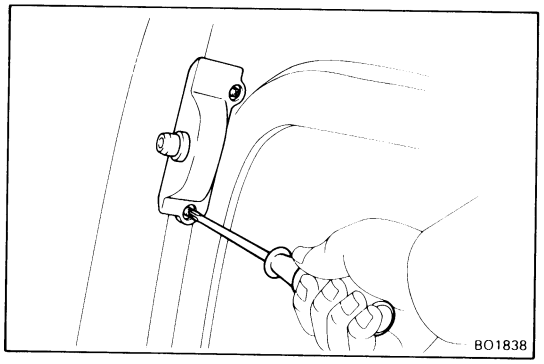

3. REMOVE REMOVABLE ROOF BRACKET
   (a) Remove two screws and the roof bracket cover.

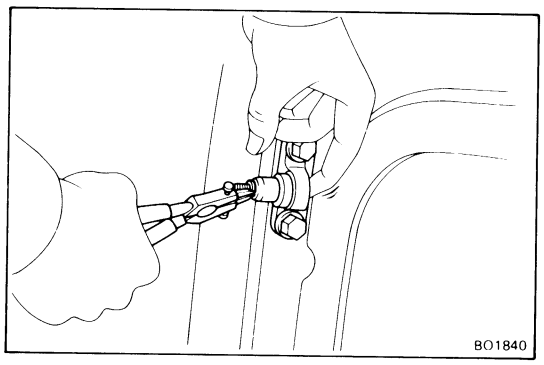

   (b) Using snap ring pliers, remove the snap ring while pushing the mounting bolt.
   (c) Remove the mounting bolt and spring.

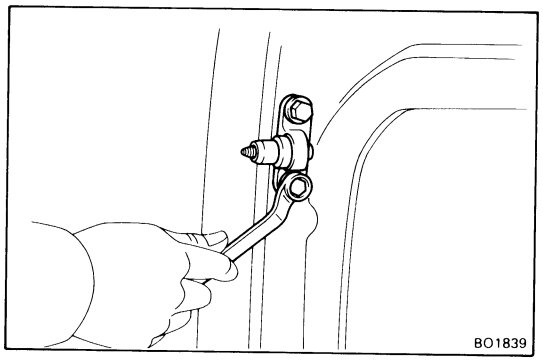

   (d) Remove two bolts, the shim and the roof bracket.

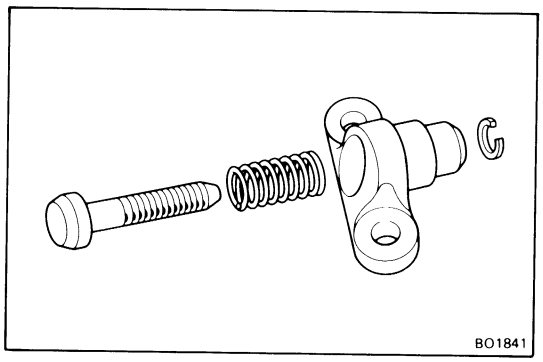

INSTALLATION OF REMOVABLE ROOF

(See page BO-43)

1. INSTALL REMOVABLE ROOF BRACKET
   (a) Install the spring and mounting bolt.
   (b) Using snap ring pliers, install the snap ring.
2. ADJUST REMOVABLE ROOF
   (See page BO-44)
3. INSTALL REMOVABLE ROOF HEADLINING
4. INSTALL REMOVABLE ROOF SIDE MOULDING

Front Holder and Rear Holder

REMOVAL OF FRONT HOLDER AND REAR HOLDER

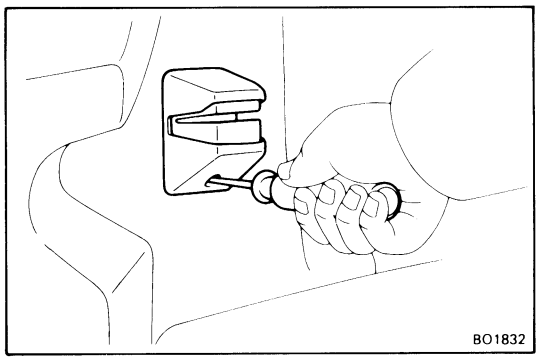

1. REMOVE FRONT HOLDER FROM DECK TRIM SIDE PANEL
   (a) Remove the two screws and front holder cover.

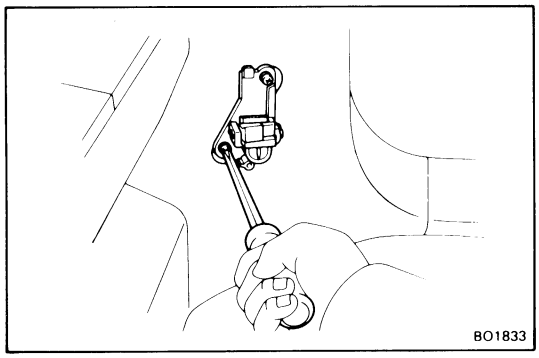

   (b) Remove two screws and the front holder.

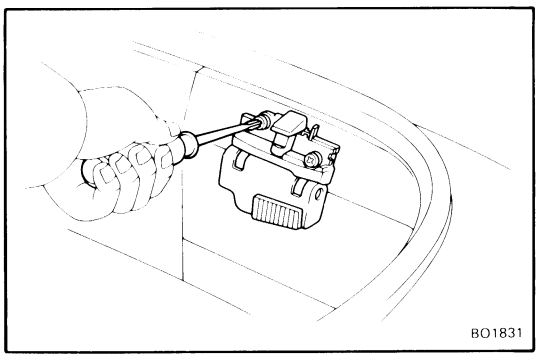

2. REMOVE REAR HOLDER AND DECK TRIM REAR COVER
   (a) Remove the holder cover.
   (b) Remove the holder and two screws.

INSTALLATION OF FRONT HOLDER AND REAR HOLDER

INSTALL FRONT HOLDER AND REAR HOLDER IN REVERSE SEQUENCE OF REMOVAL

SAFETY PAD

COMPONENTS

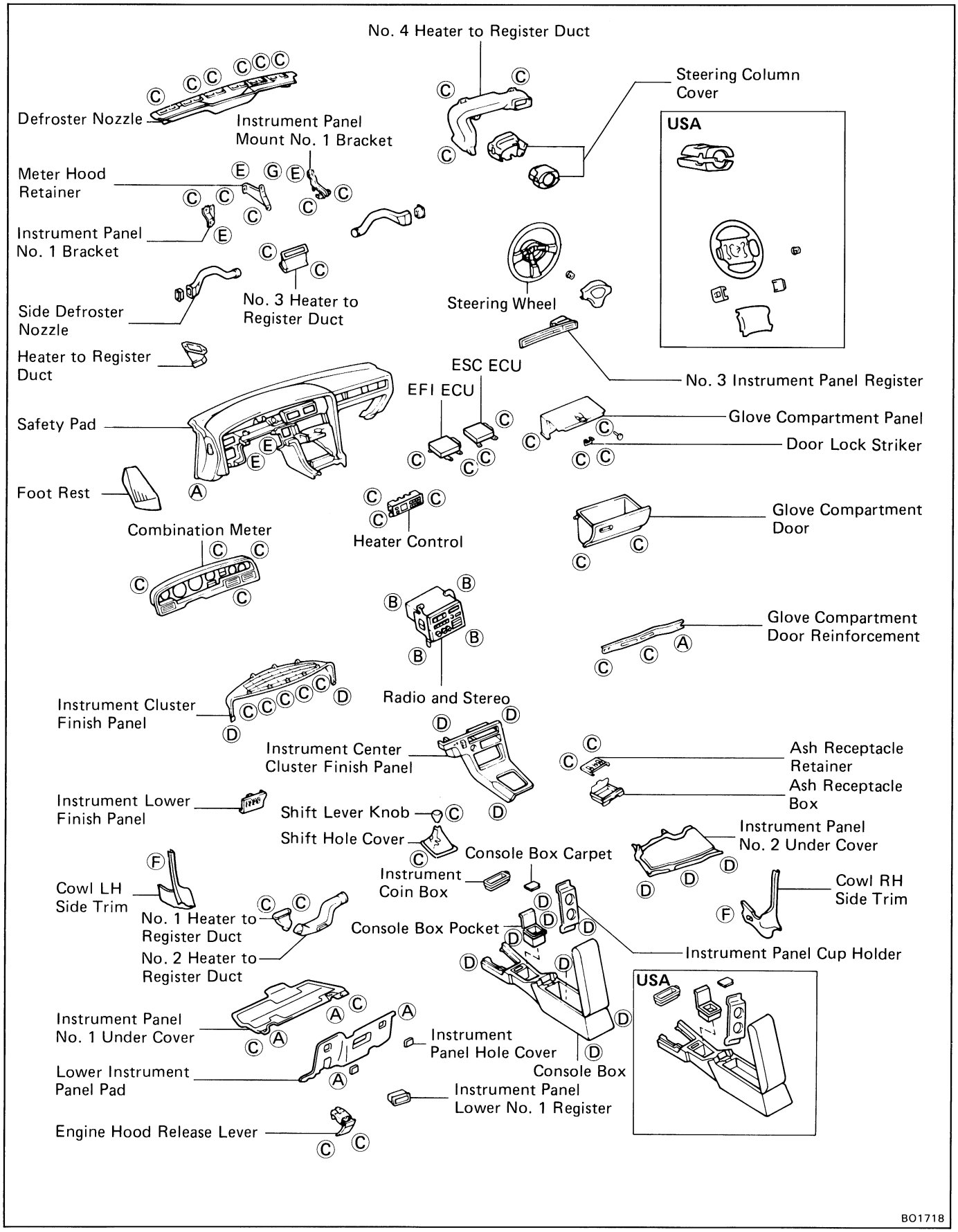

HINT: Screw sizes in the previous illustration are indicated by following the code below for removal and installation of safety pad.

mm (in.)

Code	Shape	Size	Code	Shape	Size	Code	Shape	Size
A		ϕ = 6 (0.24) L = 20 (0.79)	C		ϕ = 5.22 (0.2055) L = 16 (0.63)	E		ϕ = 6 (0.24)
B		ϕ = 5 (0.20) L = 18 (0.71)	D		ϕ = 5.22 (0.2055) L = 20 (0.79)	F		ϕ = 6 (0.24)
G		ϕ = 6 (0.24)						

BO3544

REMOVAL OF SAFETY PAD

(See page BO-50)

1. **TILT DOWN AND PUT OUT STEERING WHEEL**

2. **DISCONNECT BATTERY CABLE FROM NEGATIVE TERMINAL**

   CAUTION: Work must be started after approx. 20 seconds or longer from the time the ignition switch is turned to the "LOCK" position and the negative (—) terminal cable is disconnected from the battery.

3. **REMOVE STEERING WHEEL**
   USA (See step 1 to 2 on page SR-5)
   CANADA (See step 1 to 2 on page SR-6)

   NOTICE: The steering wheel pad should be placed with the pad top surface facing up.

4. **REMOVE STEERING COLUMN COVER**

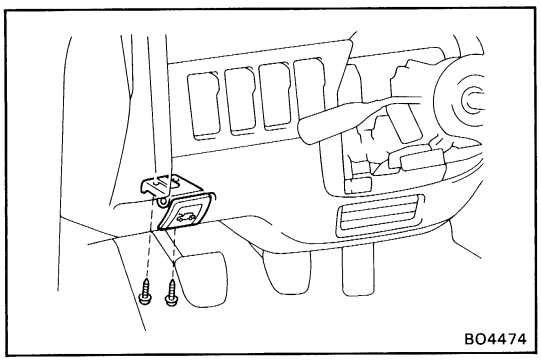

BO4474

5. **REMOVE INSTRUMENT PANEL NO.1 UNDER COVER AND LOWER INSTRUMENT PANEL PAD**

   (a) Remove two screws and engine hood release lever.

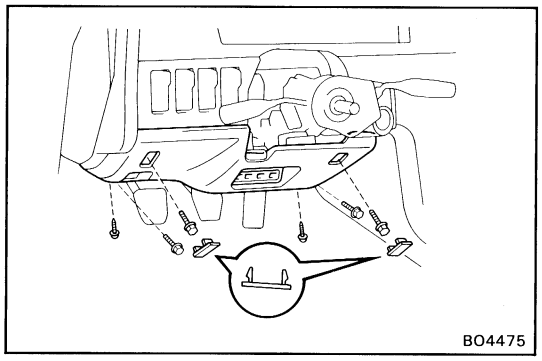

(b) Using a screwdriver, remove instrument panel hole cover.

HINT: Tape the screwdriver tip before use.

(c) Remove four bolts and two screws.

(d) Remove lower instrument panel No.1 under cover and lower instrument panel pad.

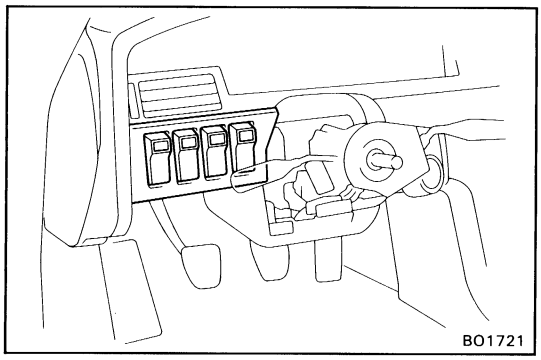

6. REMOVE INSTRUMENT LOWER FINISH PANEL

(a) Pull out the lower finish panel.

(b) Disconnect the connectors from the switches.

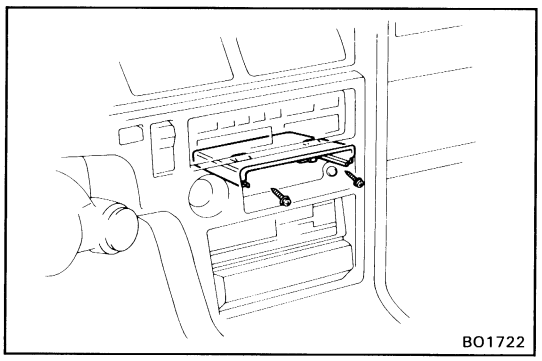

7. REMOVE INSTRUMENT CENTER CLUSTER FINISH PANEL

(a) Remove the ash tray.

(b) Remove the two screws and ash retainer from the panel.

(c) Remove the shift lever knob.(M/T only)

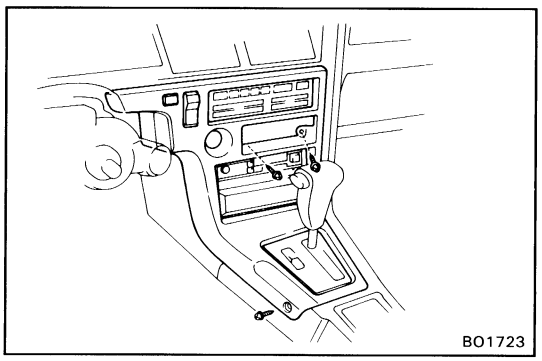

(d) Remove the three screws.

(e) Disconnect the connectors and remove the panel.

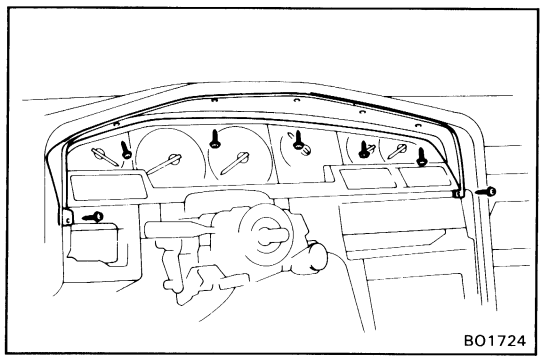

8. REMOVE INSTRUMENT CLUSTER FINISH PANEL

Remove the seven screws and panel.

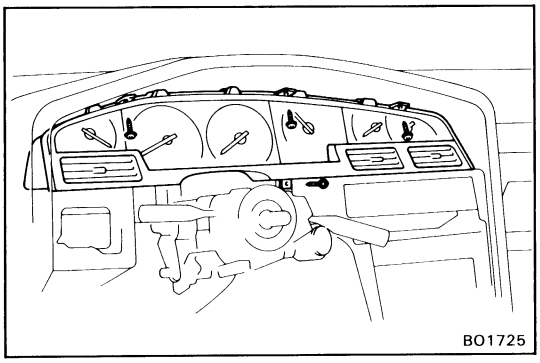

9. REMOVE COMBINATION METER

(a) Remove the four screws.

(b) Disconnect the connectors and remove the meter.

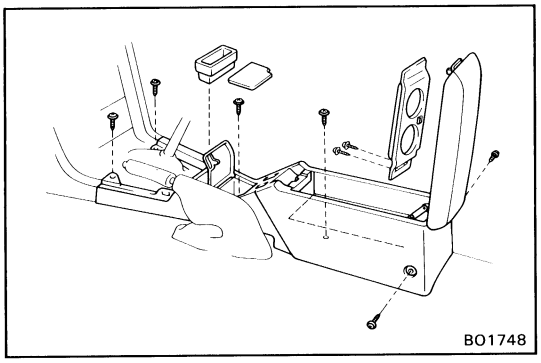

10. REMOVE CONSOLE BOX

(a) Remove the console box carpet and the coin box.

(b) Remove the eight screws and the cup holder.

(c) Disconnect the connectors and remove the console box.

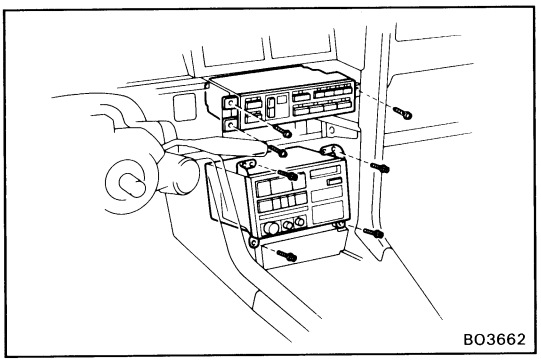

11. REMOVE HEATER CONTROL

(a) Remove the three screws.

(b) Disconnect the connectors and remove the heater control.

12. REMOVE RADIO AND STEREO

(a) Remove the four screws.

(b) Disconnect the connectors and radio antenna cable.

(c) Remove the radio and stereo.

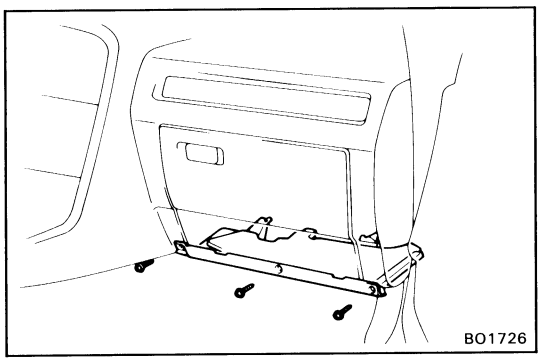

13. REMOVE INSTRUMENT PANEL NO.2 UNDER COVER

Remove the three screws and cover.

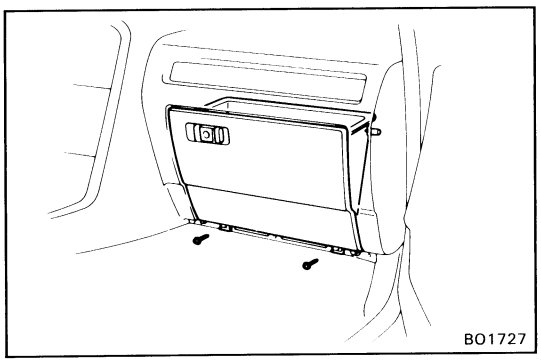

14. REMOVE GLOVE COMPARTMENT DOOR

Remove the two screws and door.

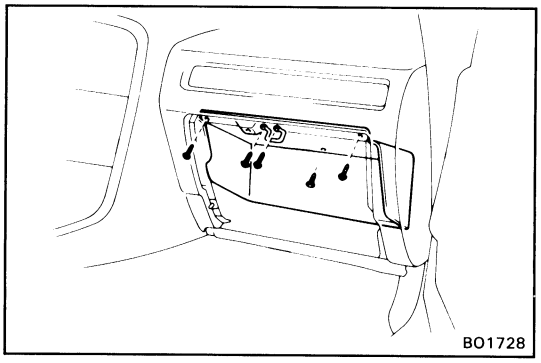

15. REMOVE GLOVE COMPARTMENT PANEL

(a) Remove the two screws and door lock striker.

(b) Remove the two screws and a clip.

(c) Remove the light from the panel and remove the panel.

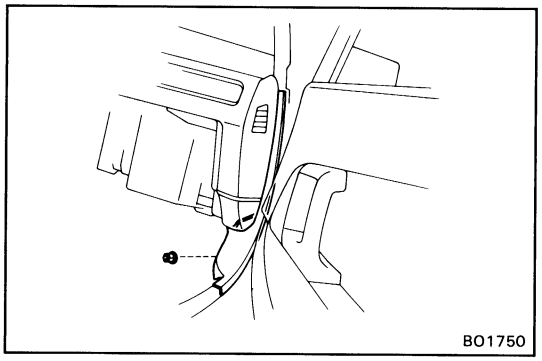

16. REMOVE COWL RH SIDE TRIM

Remove the nut and trim.

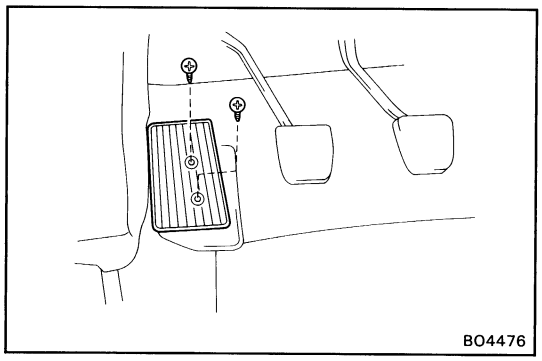

17. REMOVE FOOT REST

Remove two screws and the rest.

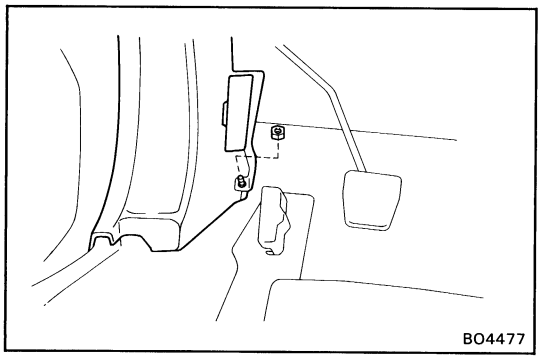

18. REMOVE COWL LH SIDE TRIM

Remove the nut and the side trim.

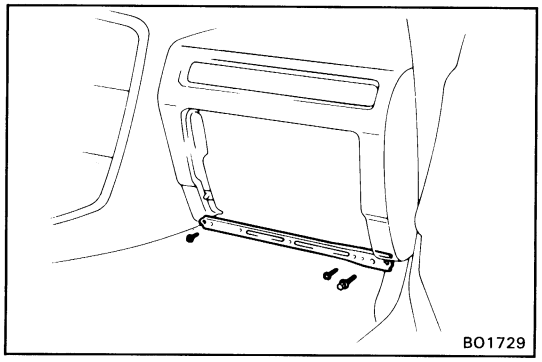

19. REMOVE GLOVE COMPARTMENT DOOR REINFORCEMENT

Remove the two screws, bolt and reinforcement.

20. REMOVE GLOVE COMPARTMENT DOOR COURTESY SWITCH

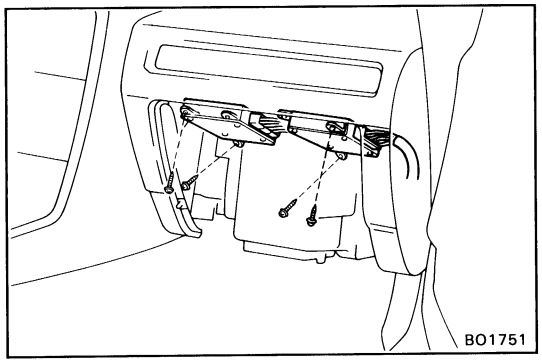

21. REMOVE EFI ECU AND ESC ECU

(a) Remove two screws and remove EFI ECU.

(b) Disconnect the connectors.

(c) Remove two screws and remove ESC ECU.

(d) Disconnect the connectors.

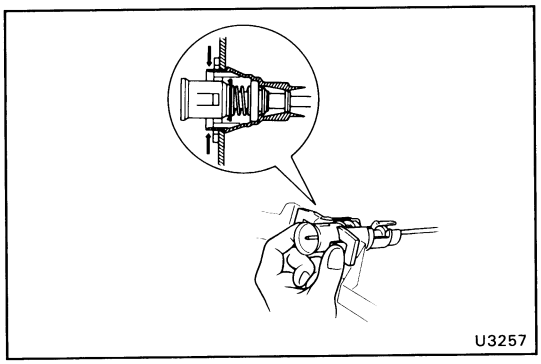

22. REMOVE SAFETY PAD

(a) Push on the pawls of the meter bracket and pull it from the safety pad.

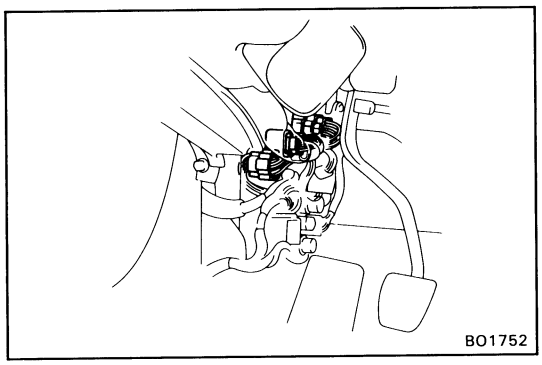

(b) Disconnect the driver side wire harness connectors.

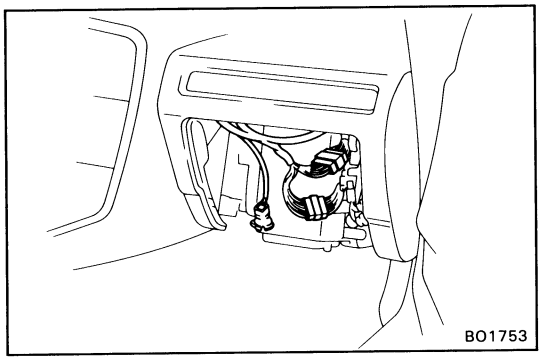

(c) Disconnect the passenger side wire harness connectors.

(d) Disconnect the console box side wire harness from the body.

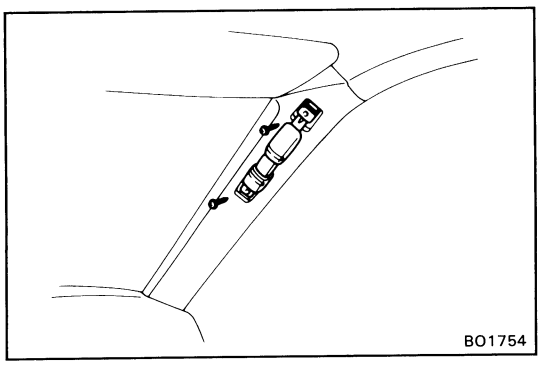

(e) Remove the two screws and assist grip.

(f) Remove the front pillar garnish.

(g) Remove the five nuts, two screws and bolt.

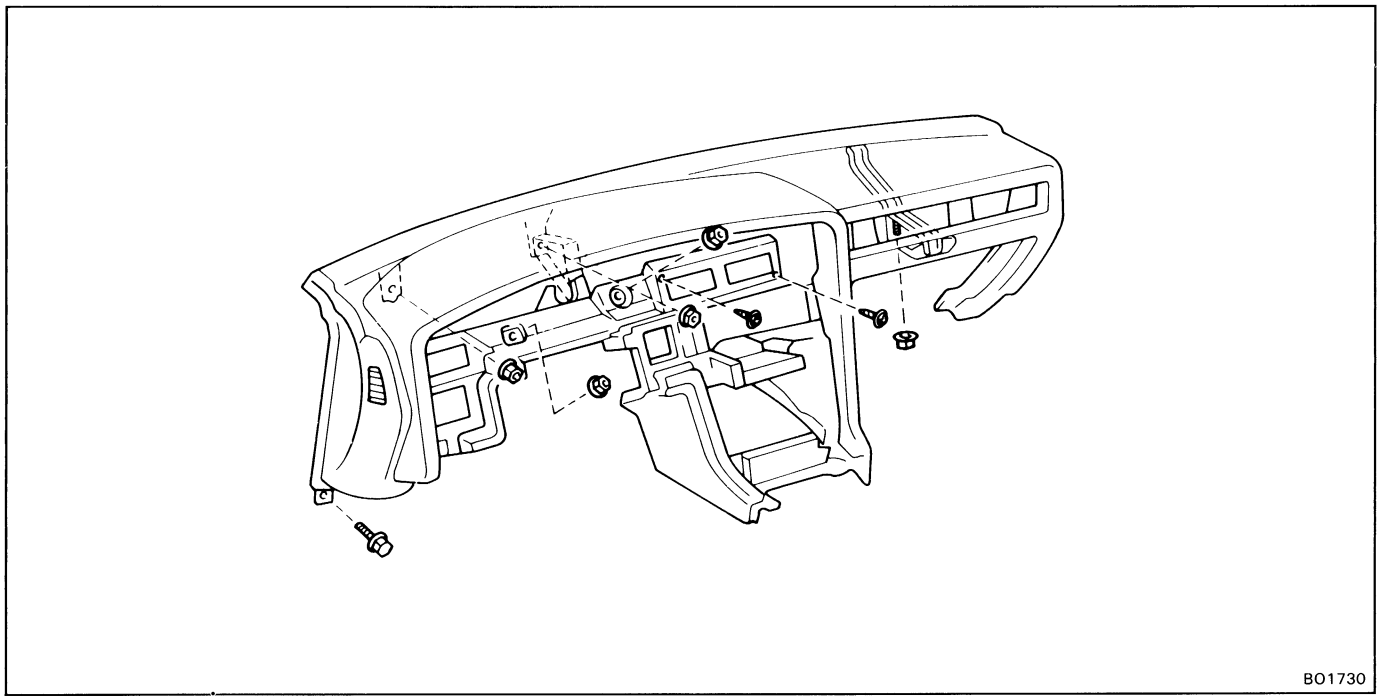

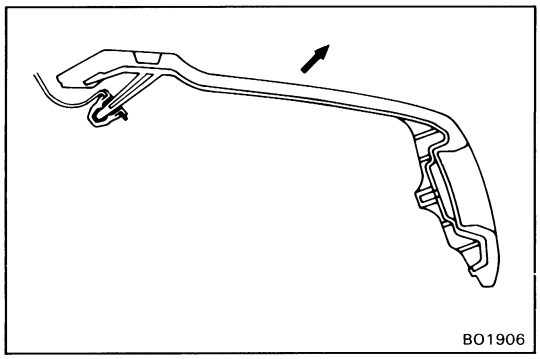

(h) The safety pad has a boss on the reverse side for clamping onto the clip on the body side. Therefore, when removing, pull upward at an angle.

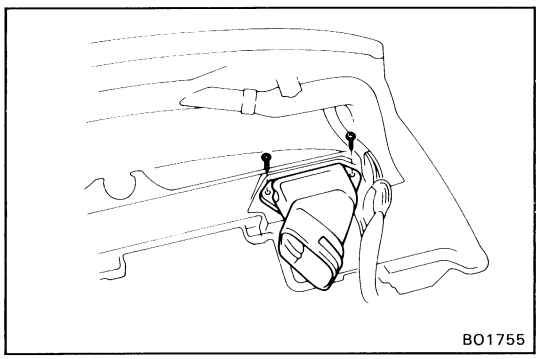

23. REMOVE NO.1 HEATER TO REGISTER DUCT

Remove the two screws and duct.

24. REMOVE SIDE DEFROSTER NOZZLE AND DUCT

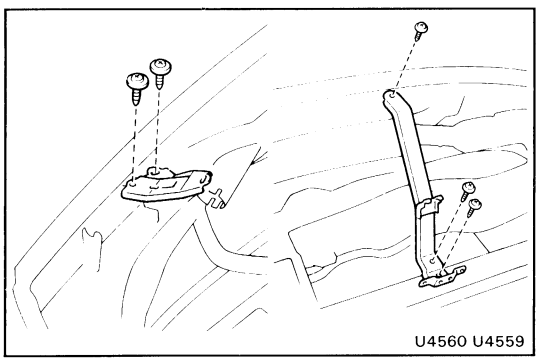

25. REMOVE INSTRUMENT PANEL MOUNT NO.1 BRACKET

Remove the three screws and bracket.

26. REMOVE INSTRUMENT PANEL NO.1 BRACKET

Remove the two screws and bracket.

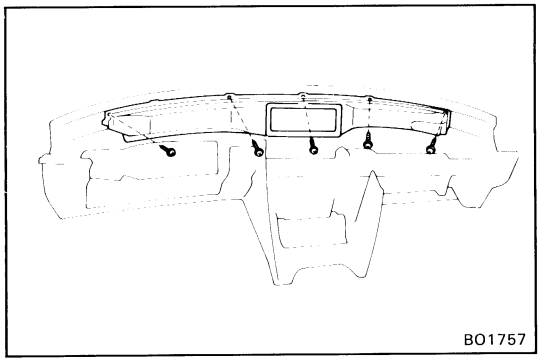

27. REMOVE DEFROSTER NOZZLE

Remove the five screws and nozzle.

28. REMOVE NO.4 HEATER TO REGISTER DUCT

Remove the three screws and duct.

29. REMOVE WIRE HARNESS AND JUNCTION BLOCK

Remove the nine screws and wire harness with junction block.

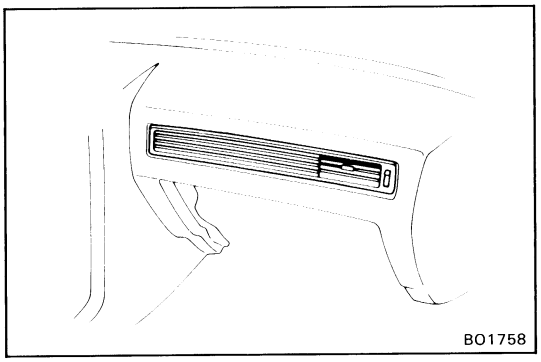

30. REMOVE NO.3 INSTRUMENT PANEL REGISTER

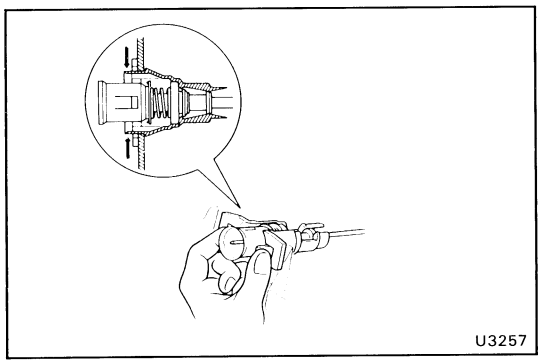

INSTALLATION OF SAFETY PAD

(See page BO-50)

INSTALL SAFETY PAD PARTS FOLLOWING REMOVAL SEQUENCE IN REVERSE

HINT: When reinstall the speedometer cable, first pull on the cable guide casing.

SEAT

Front Seat

COMPONENTS

w/o Seat Vertical Adjuster

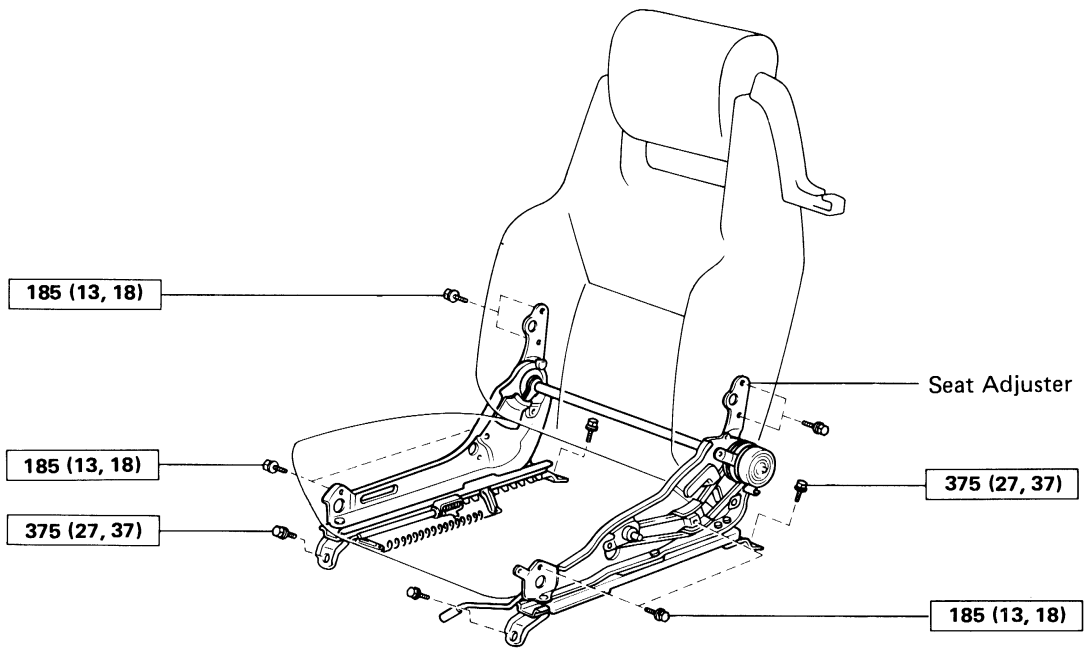

w/ Seat Vertical Adjuster

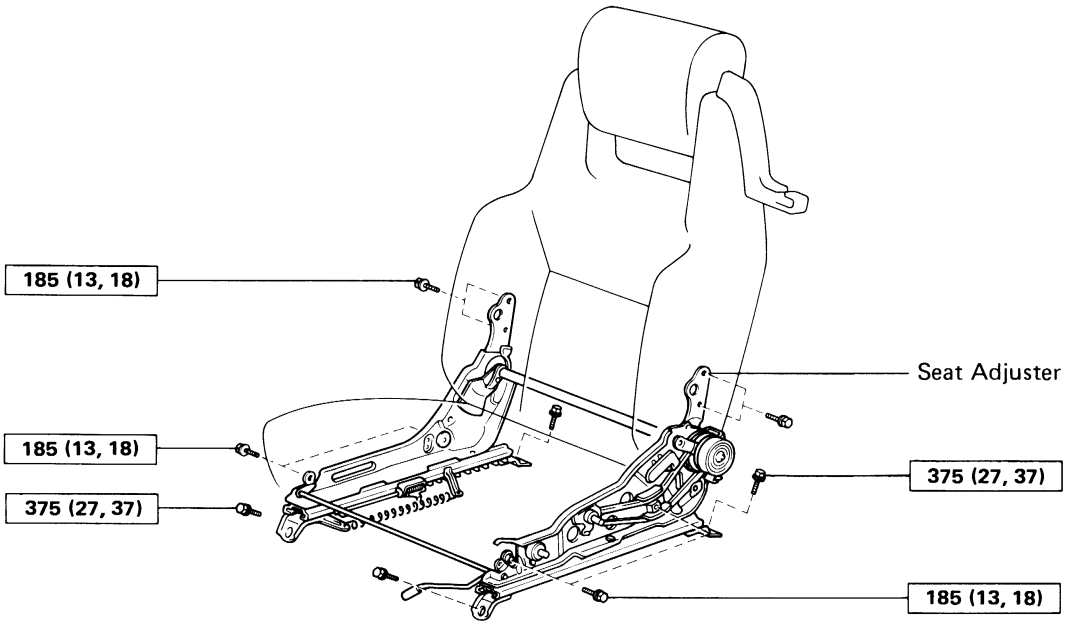

kg·cm (ft·lb, N·m) : Specified torque

BO1770
BO1771

COMPONENTS (Cont'd)

w/ Power Seat

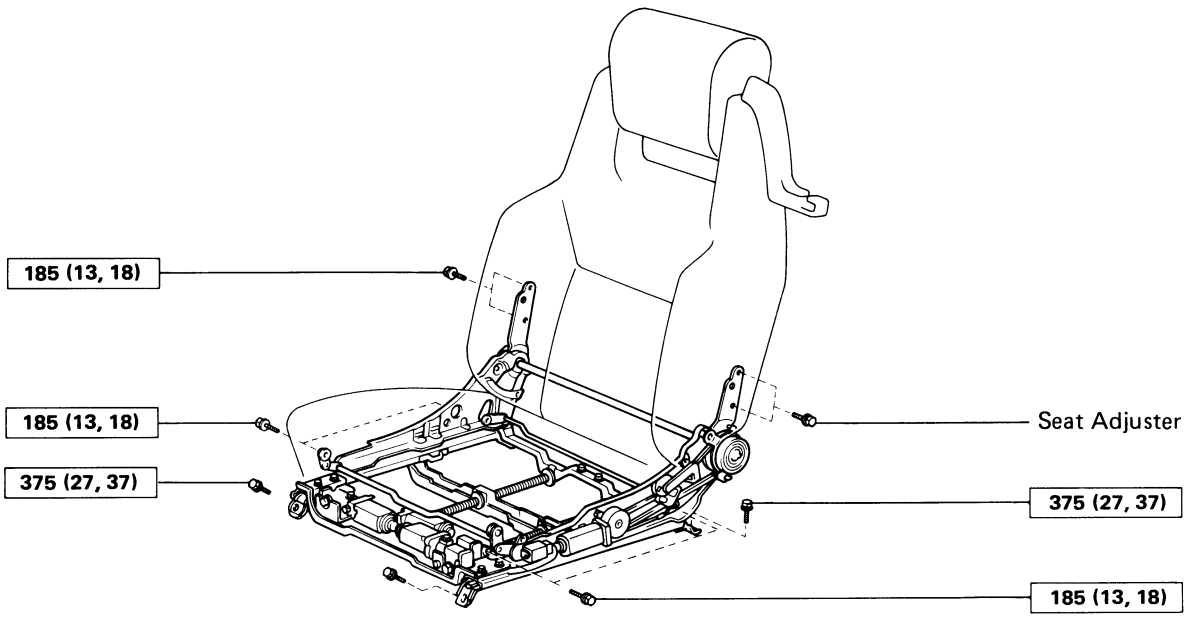

BO1772

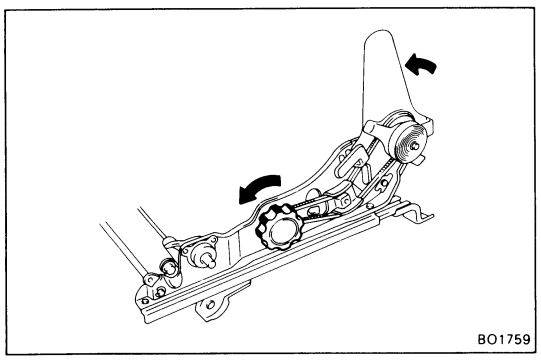

BO1759

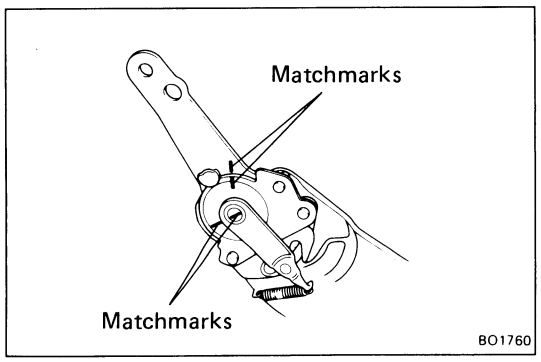

BO1760

ASSEMBLY OF FRONT SEAT

PRECAUTION: Pay attention items below when assembling the front seat.

(a) To prevent warpage of the seat adjuster, carry out this operation on a level surface.

(b) Move the upper arm to the forward most position by turning the adjuster knob fully.

(c) Align the matchmarks of the seat adjuster inner by turning the hinge pin.

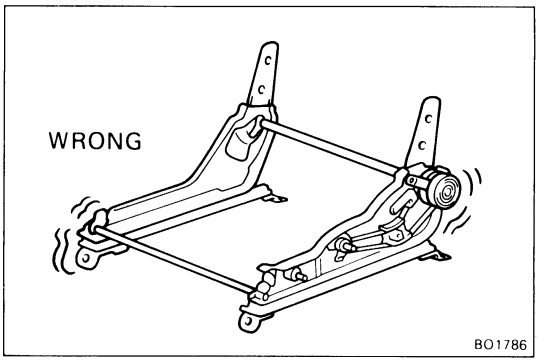

(d) Be sure to keep both lower brackets aligned when installing the connecting pipe.

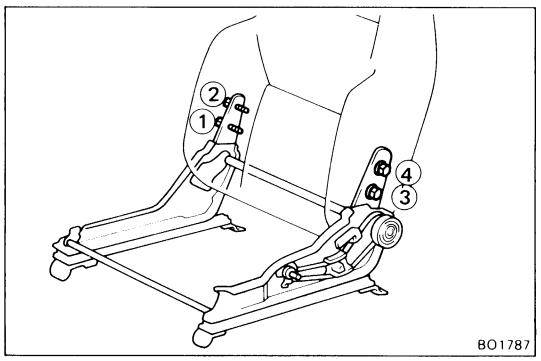

(e) Temporarily tighten the seat back set bolts and torque the bolts in order.

(f) After assemble the front seat, check that the seat adjuster outer and inner locks are securely locked.
If they are not securely locked, reassemble the seat adjuster.

Rear Seat

COMPONENTS

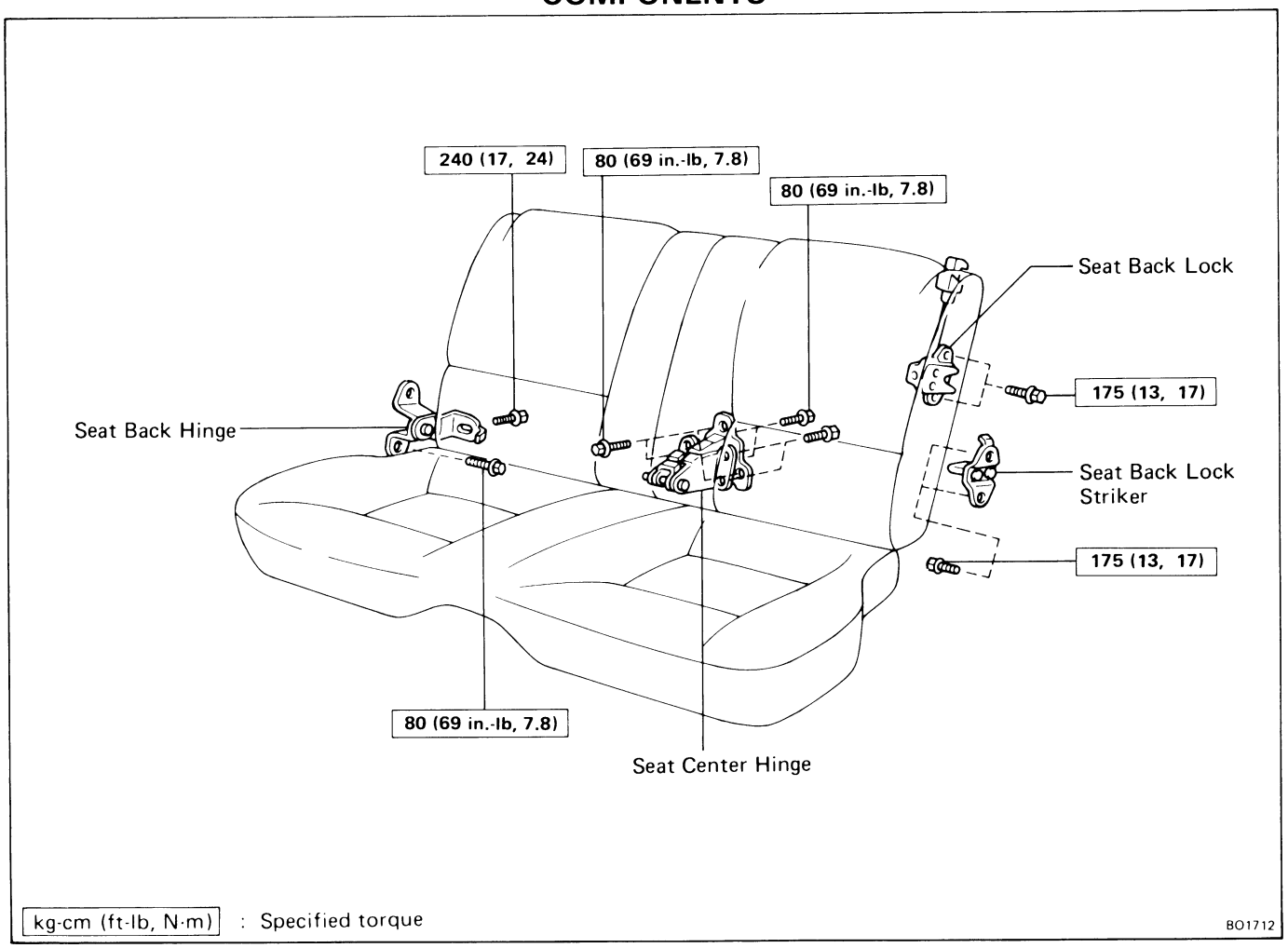

SEAT BELT

COMPONENTS

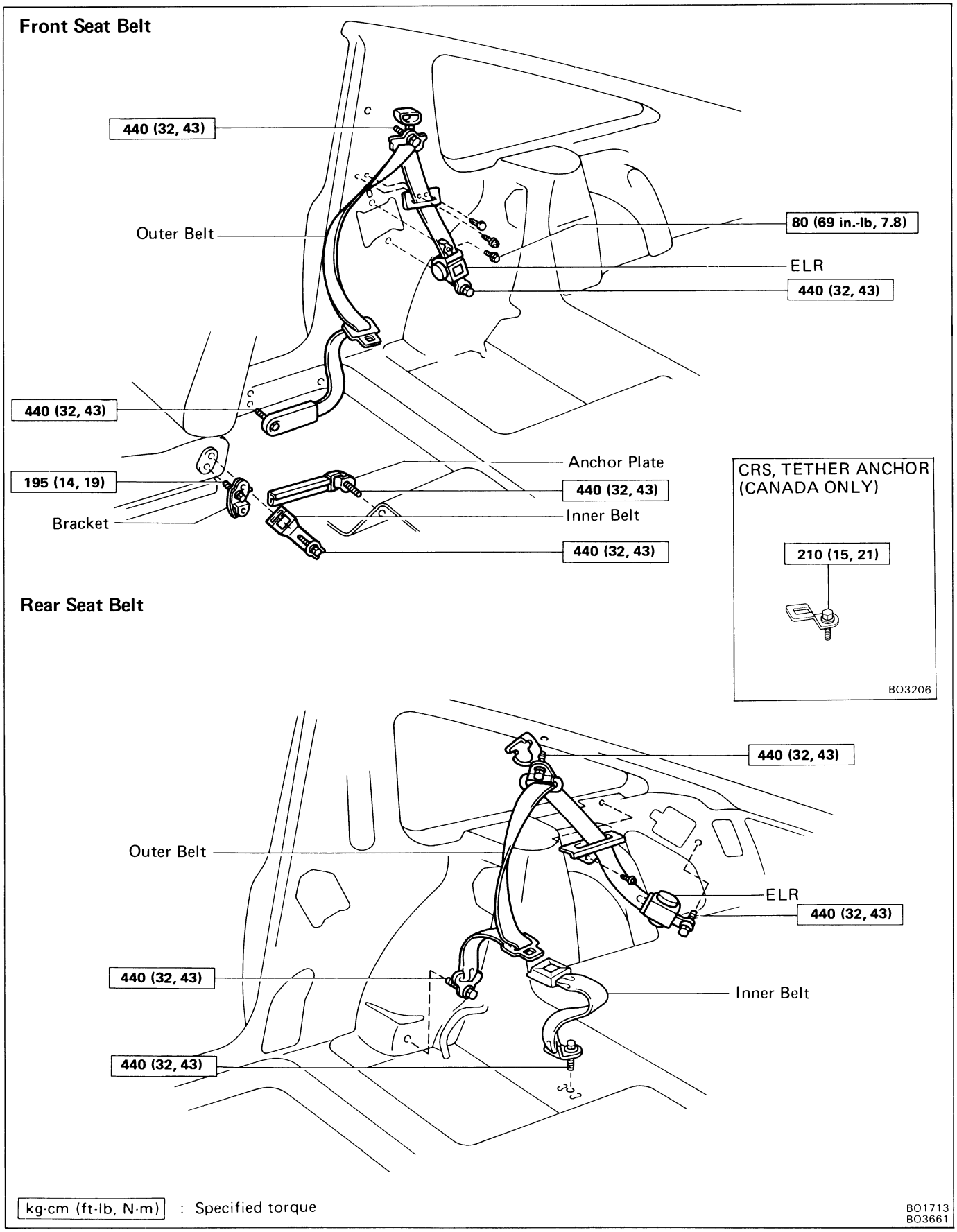

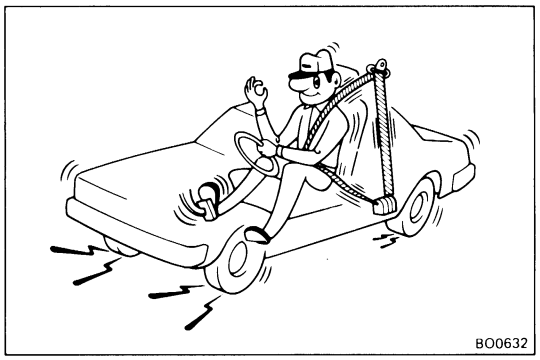

SEAT BELT

[Emergency Locking Retractor (ELR) Type]

1. RUNNING TEST (IN SAFE AREA)

(a) Fasten the front seat belt.

(b) Drive the car at 10 mph (16 km/h) and make a very hard stop.

(c) Check that the belt is locked and cannot be extended at this time.

HINT: Conduct this test in a safe area. If the belt does not lock, remove the belt mechanism assembly and conduct the following static check. Also, whenever installing a new belt assembly, verify proper operation before installation.

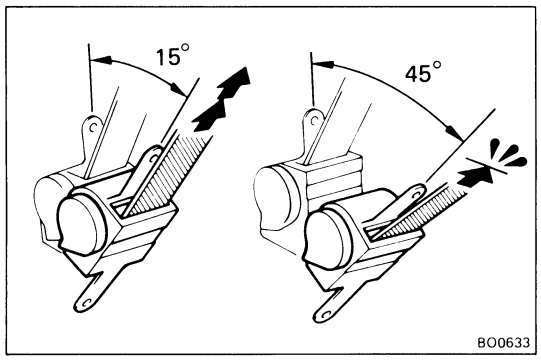

2. STATIC TEST

(a) Remove the locking retractor assembly.

(b) Tilt the retractor slowly.

(c) Verify that the belt can be pulled out at a tilt of 15 degrees or less, and cannot be pulled out at over 45 degrees of tilt.

If a problem is found, replace the assembly.

BODY DIMENSIONS

ENGINE COMPARTMENT

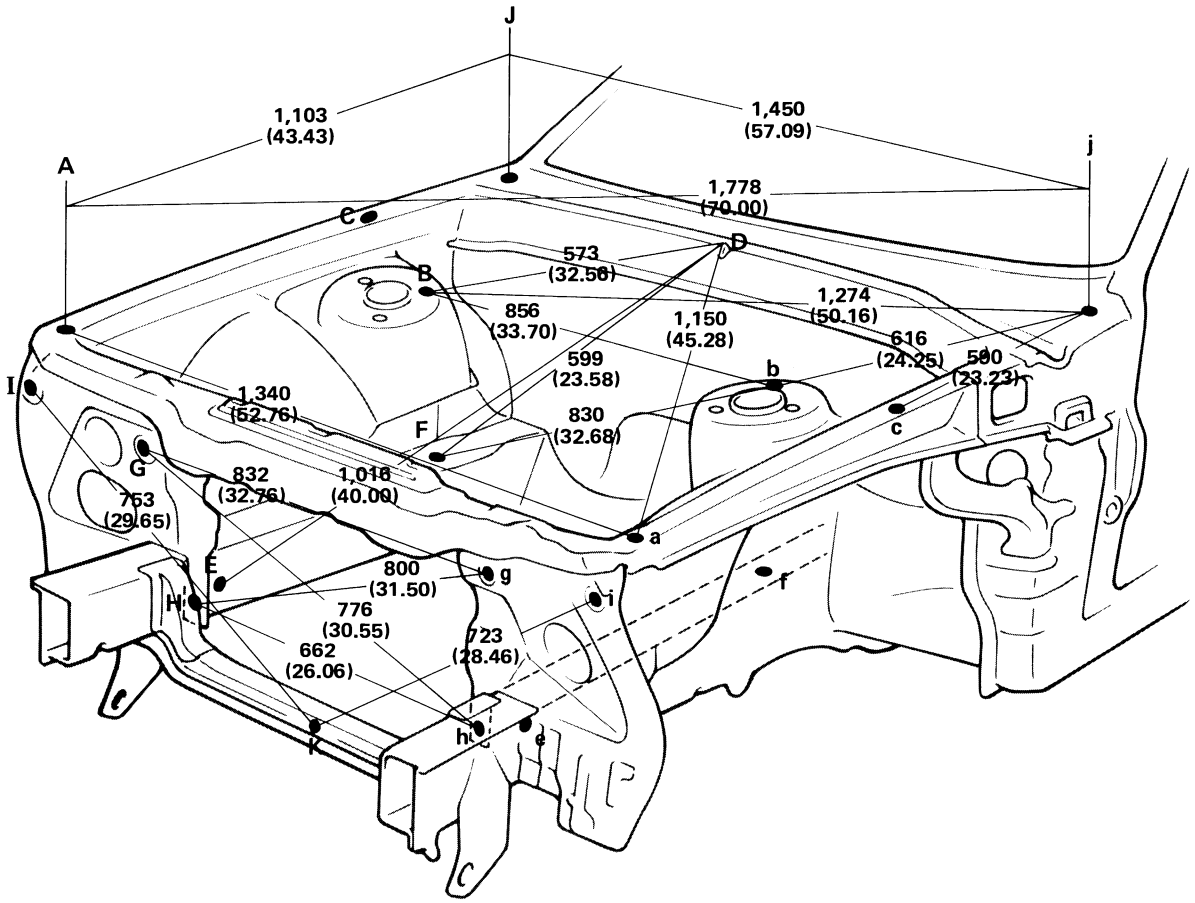

The dimensions in the following drawing indicates actual distance. Therefore, please use the dimensions as a reference.

mm (in.)

Symbol	Nomenclature	Hole dia.
A, a	Front fender installation nut – front	8 (0.31)
B, b	Front spring support hole – rear	11 (0.43)
C, c	Front fender installation nut – rear	8 (0.31)
D	Cowl top panel center mark	–
E, e	Front side member standard hole	15 (0.59)
F, f	Suspension member rear installation hole – upper	17 (0.67)
G, g	Retractable light bracket installation nut – upper	11 (0.43)
H, h	Radiator seal installation hole – lower	7 (0.28)
I, i	Front fender side installation hole	8 (0.31)
J, j	Cowl top panel standard hole	10 (0.39)
K	Hood lock support brace installation nut	7 (0.28)

BO1788

UNDER BODY

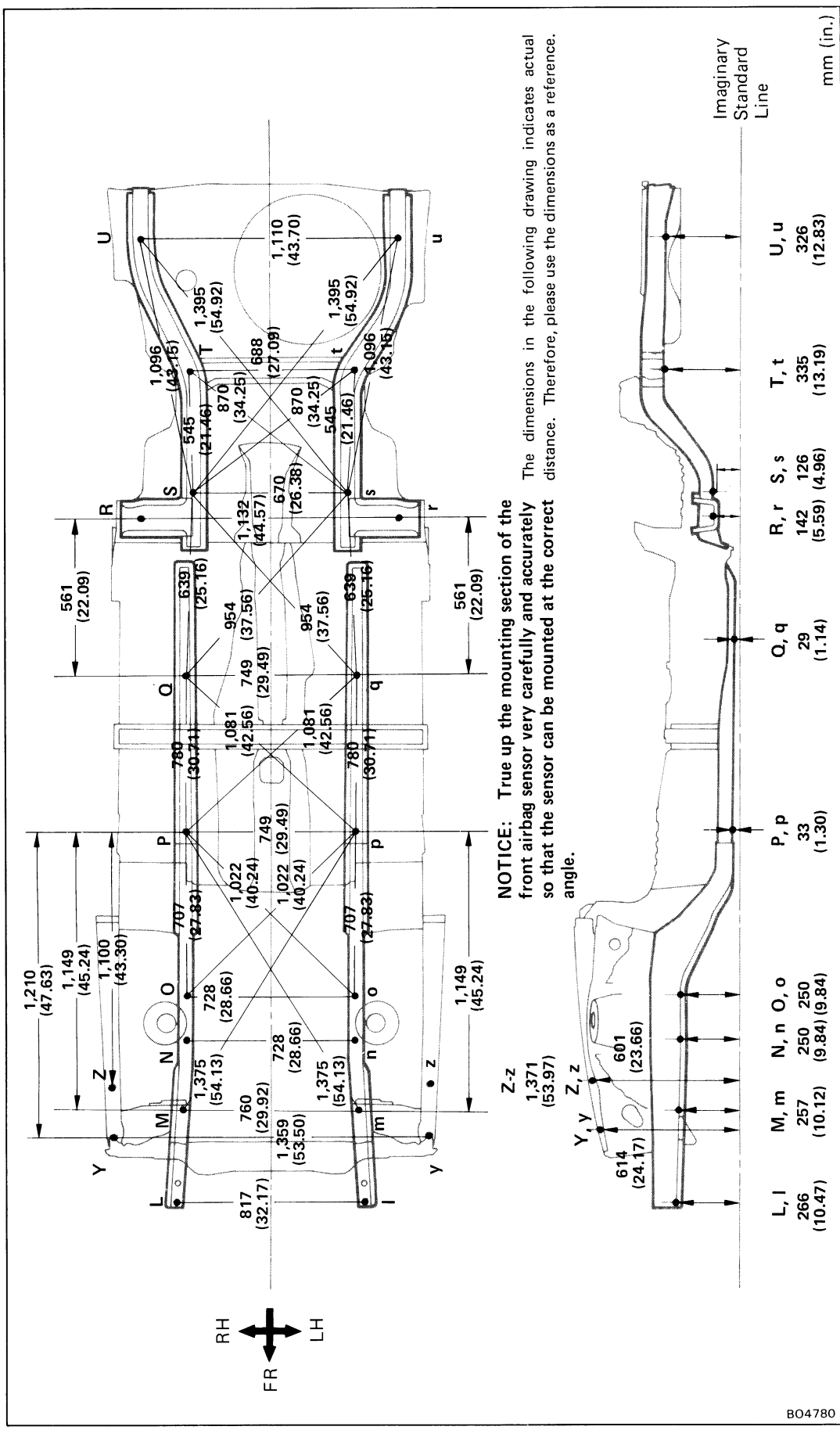

NOTICE: True up the mounting section of the front airbag sensor very carefully and accurately so that the sensor can be mounted at the correct angle.

The dimensions in the following drawing indicates actual distance. Therefore, please use the dimensions as a reference.

Symbol	Nomenclature	Hole dia.	Symbol	Nomenclature	Hole dia.
L	Front side member bumper front installation hole-Lower	15 (0.59)	R, r	Suspension member front installation hole – outer	19 (0.75)
I	Front side member bumper front installation hole-Lower	17x15(0.67x0.59)	S, s	Center floor side member standard hole	18 (0.71)
M, m	Stabilizer front installation nut	11 (0.43)	T, t	Suspension member rear installation hole	25x18(0.98x0.71)
N, n	Suspension member front installation hole – lower	17 (0.67)	U, u	Rear floor side member standard hole	18 (0.71)
O, o	Suspension member rear installation hole – lower	17 (0.67)	Y, y	Airbag front sensor installation nut – front	9 (0.35)
P, p	Front floor under reinforcement standard hole	10 (0.39)	Z, z	Airbag front sensor installation nut – rear	9 (0.35)
Q, q	Front floor No. 2 reinforcement standard hole	10 (0.39)	—	—	—

LUGGAGE COMPARTMENT

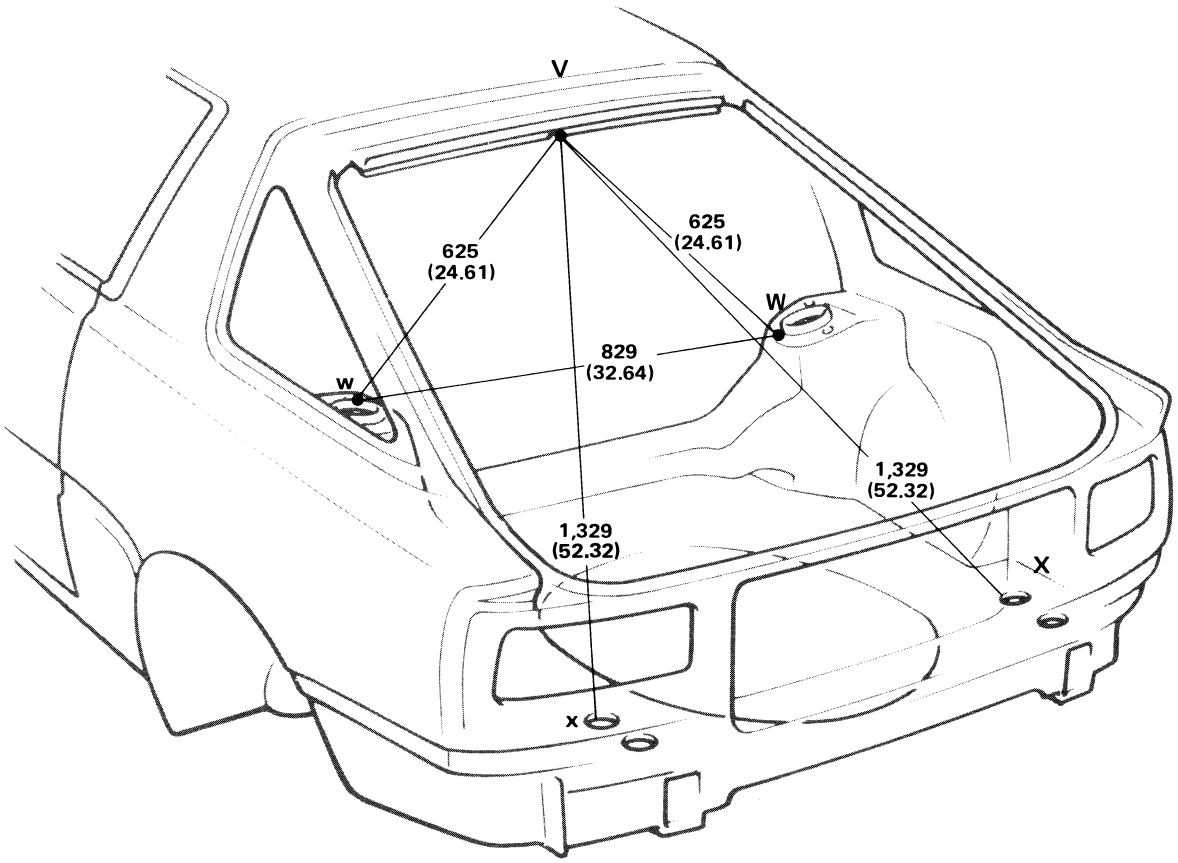

X, x Point

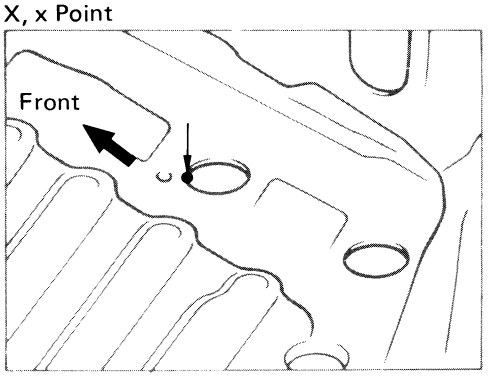

HINT: The luggage compartment measurement is to be made between the two dot-marked points as shown in the figure above.

The dimensions in the following drawing indicates actual distance. Therefore, please use the dimensions as a reference.

mm (in.)

Symbol	Nomenclature	Hole dia.
V	Back door opening frame center mark	2 (0.08)
W, w	Rear suspension spring support hole — inner	9 (0.35)
X, x	Rear floor pan bumper installation hole — front	40 (1.57)

BO1790

AIR CONDITIONING SYSTEM

	Page
GENERAL INFORMATION	AC-2
AIR CONDITIONING SYSTEM CIRCUIT	AC-4
SYSTEM COMPONENTS	AC-8
GENERAL DESCRIPTION	AC-9
SPECIAL TOOLS AND EQUIPMENT	AC-14
TROUBLESHOOTING	AC-15
Checking of Refrigeration System with Manifold Gauge	AC-17
ON-VEHICLE INSPECTION	AC-20
REFRIGERATION SYSTEM	AC-21
Checking of Refrigerant Volume	AC-21
Installation of Manifold Gauge Set	AC-21
COMPRESSOR	AC-22
RECEIVER	AC-28
CONDENSER	AC-28
CONDENSER FAN MOTORS	AC-30
HEATER BLOWER RESISTOR	AC-30
RELAYS	AC-30
PRESSURE SWITCH	AC-32
WATER TEMPERATURE SWITCH	AC-32
COOLING UNIT	AC-33
Evaporator	AC-35
REFRIGERANT LINES	AC-36
THERMISTOR	AC-37
A/C CONTROL PANEL ASSEMBLY	AC-38
AMPLIFIERS	AC-40
SENSORS	AC-42
FUNCTIONAL TEST AND ADJUSTMENT	AC-43

GENERAL INFORMATION

ELECTRICAL PARTS

Before removing and inspecting the electrical parts, set the ignition switch to the LOCK position and disconnect the negative (—) terminal cable from the battery.

CAUTION: Work must not be started until after at least 20 seconds or longer from the time the negative (—) terminal cable is disconnected.

SRS AIRBAG SYSTEM

Failure to carry out service operations in the correct sequence could cause the airbag system to deploy, possibly leading to a serious accident.
When removal or installation of the parts and the yellow wire harness and connector for the airbag is necessary, refer to the precautionary notices in the AB section before performing the operation.

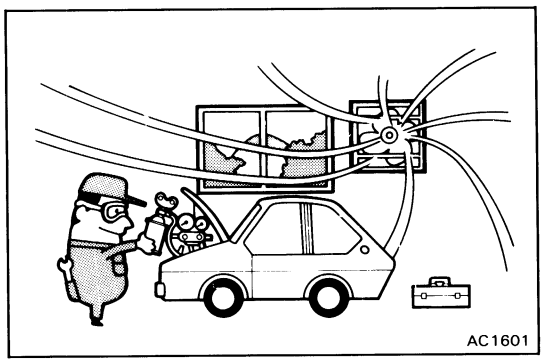
AC1601

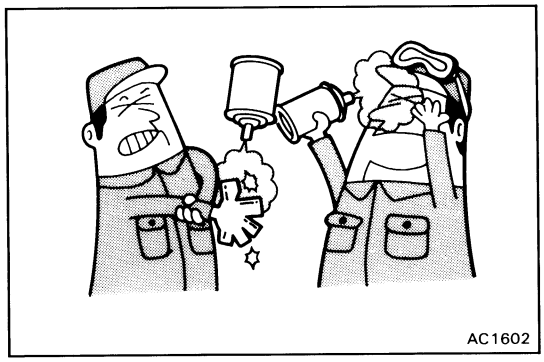
AC1602

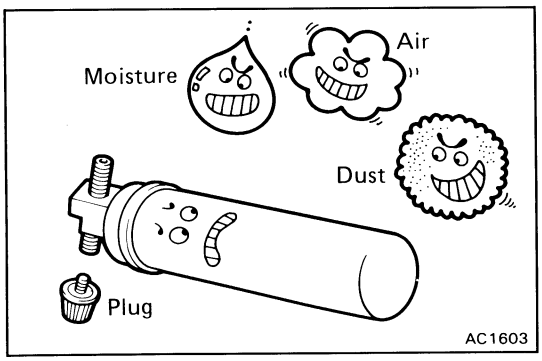

AC1603

COOLING SYSTEM

1. **WHEN HANDLING REFRIGERANT (R-12), FOLLOWING PRECAUTIONS MUST BE OBSERVED;**
   (a) Do not handle refrigerant in an enclosed area or near an open flame.
   (b) Always wear eye protection.
   (c) Be careful that liquid refrigerant does not get in your eyes or on your skin.

   If liquid refrigerant gets in your eyes or on your skin;
   - Do not rub.
   - Wash the area with lots of cool water.
   - Apply clean petroleum jelly to the skin.
   - Go immediately to a physician or hospital for professional treatment.
   - Do not attempt to treat yourself.

2. **WHEN REPLACING PARTS IN REFRIGERANT LINE;**
   (a) Discharge the refrigerant in the line slowly before replacement.
   (b) Insert a plug immediately in disconnected parts to prevent the entry of moisture and dust.
   (c) Do not leave a new condenser or receiver, etc., lying around with the plug removed.

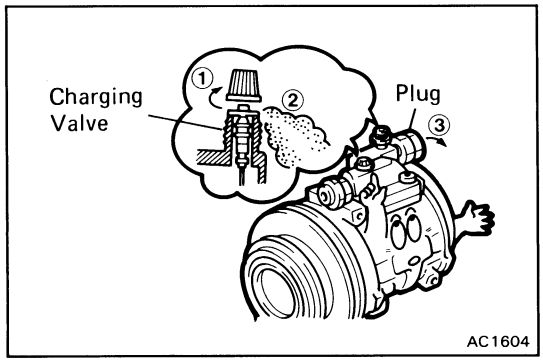

(d) Discharge the refrigerant from the charging valve before installing a new compressor.

If the refrigerant is not discharged first, compressor oil will spray out with the refrigerant gas when the plug is removed.

(e) Do not use a torch for tube bending or lengthening operations.

If tubes are heated with a torch, a layer of oxidation forms inside the tube, causing the same kind of trouble as an accumulation of dust.

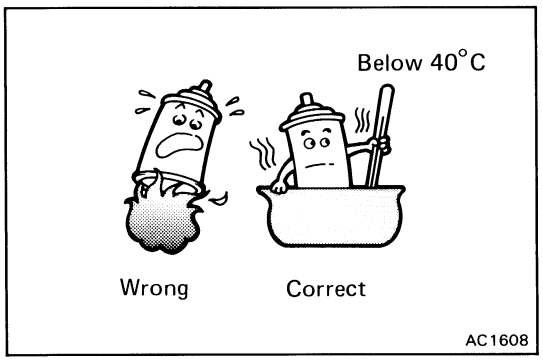

3. WHEN HANDLING REFRIGERANT CONTAINER (SERVICE CAN);

(a) The container must never be heated.

(b) Containers must be kept below 40°C (104°F)

(c) If warming a service can with hot water, be careful that the valve on top of the service can is never immersed in the water, as the water may permeate the refrigerant cycle.

(d) Empty service cans must never be re-used.

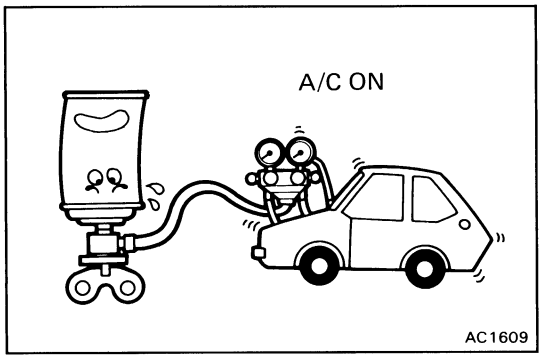

4. WHEN A/C IS ON AND REFRIGERANT GAS IS BEING REPLENISHED;

(a) If there is not enough refrigerant gas in the refrigerant cycle, oil lubrication will be insufficient and compressor burnout may occur, so take care to avoid this.

(b) If the valve on the high pressure side is opened, refrigerant flows in the reverse direction and could cause the service can to rupture, so open and close the valve on the low pressure side only.

(c) If the service can is inverted and refrigerant is loaded in a liquid state, the liquid is compressed and causes the compressor to break down, so the refrigerant must be in a gaseous state.

(d) Be careful not to load too much refrigerant gas, as this causes trouble such as inadequate cooling, poor fuel economy, engine overheating, etc.

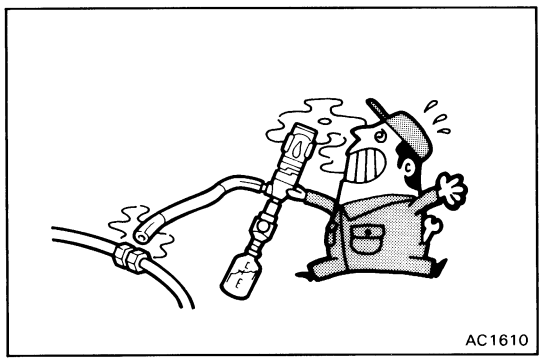

5. WHEN USING GAS-CYLINDER TYPE GAS LEAK TESTER;

(a) As a naked flame is used, first make sure that there are no flammable substances nearby before using it.

(b) Be careful, as a poisonous gas is produced when refrigerant gas comes in contact with heated parts.

AIR CONDITIONING SYSTEM CIRCUIT

7M-GTE Engine

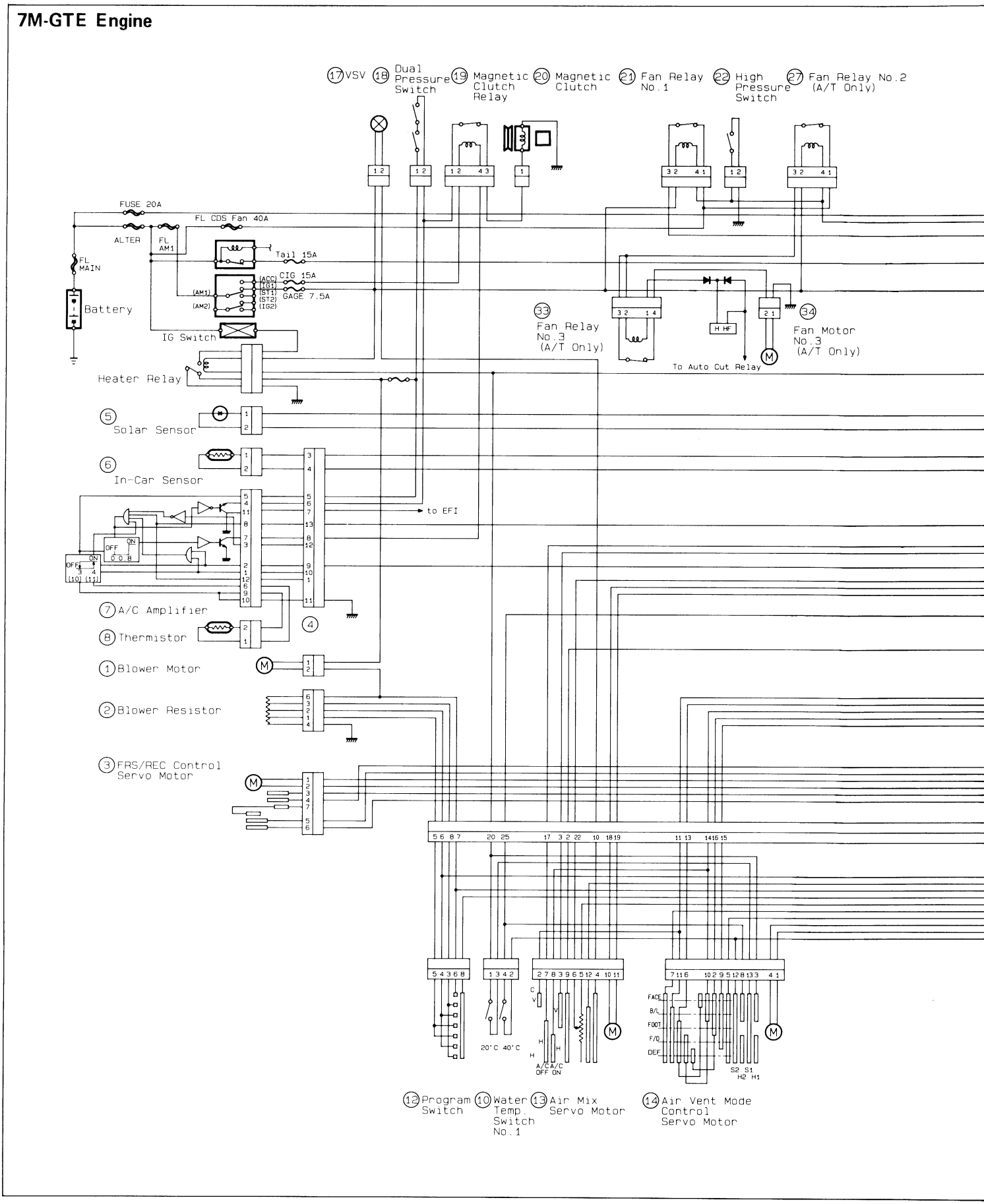

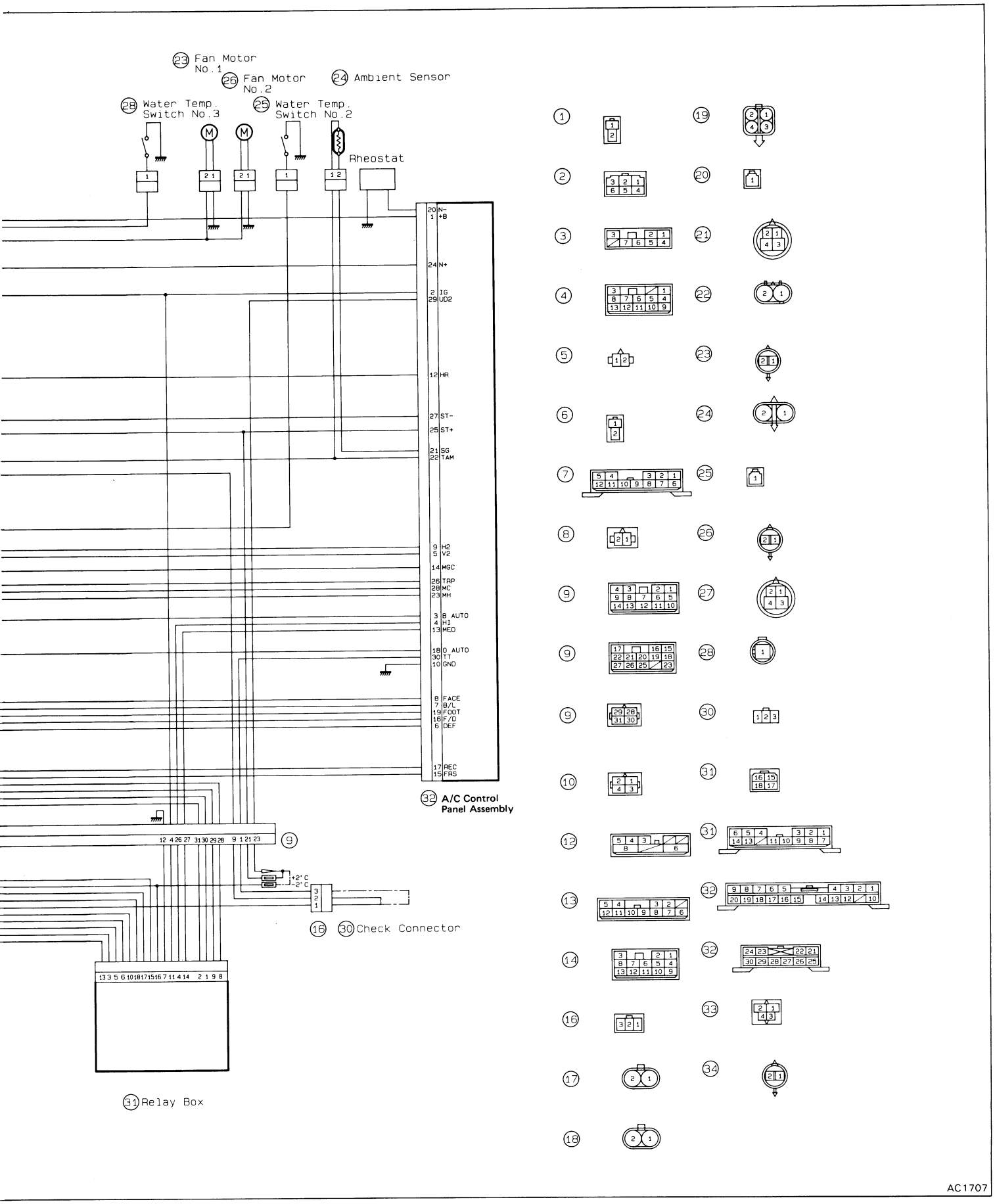
23 Fan Motor No.1
26 Fan Motor No.2
24 Ambient Sensor
28 Water Temp. Switch No.3
25 Water Temp. Switch No.2
Rheostat
20 N-
1 +B
24 N+
2 IG
29 UD2
12 HR
27 ST-
25 ST+
21 SG
22 TAM
9 H2
5 V2
14 MGC
26 TRP
28 MC
23 MH
3 B AUTO
4 HI
13 MED
18 O AUTO
30 TT
10 GND
8 FACE
7 B/L
19 FOOT
16 F/D
6 DEF
17 REC
15 FRS
32 A/C Control Panel Assembly
9
+2°C
-2°C
16 30 Check Connector
31 Relay Box
AC1707

AIR CONDITIONING SYSTEM CIRCUIT (Cont'd)

7M-GE Engine

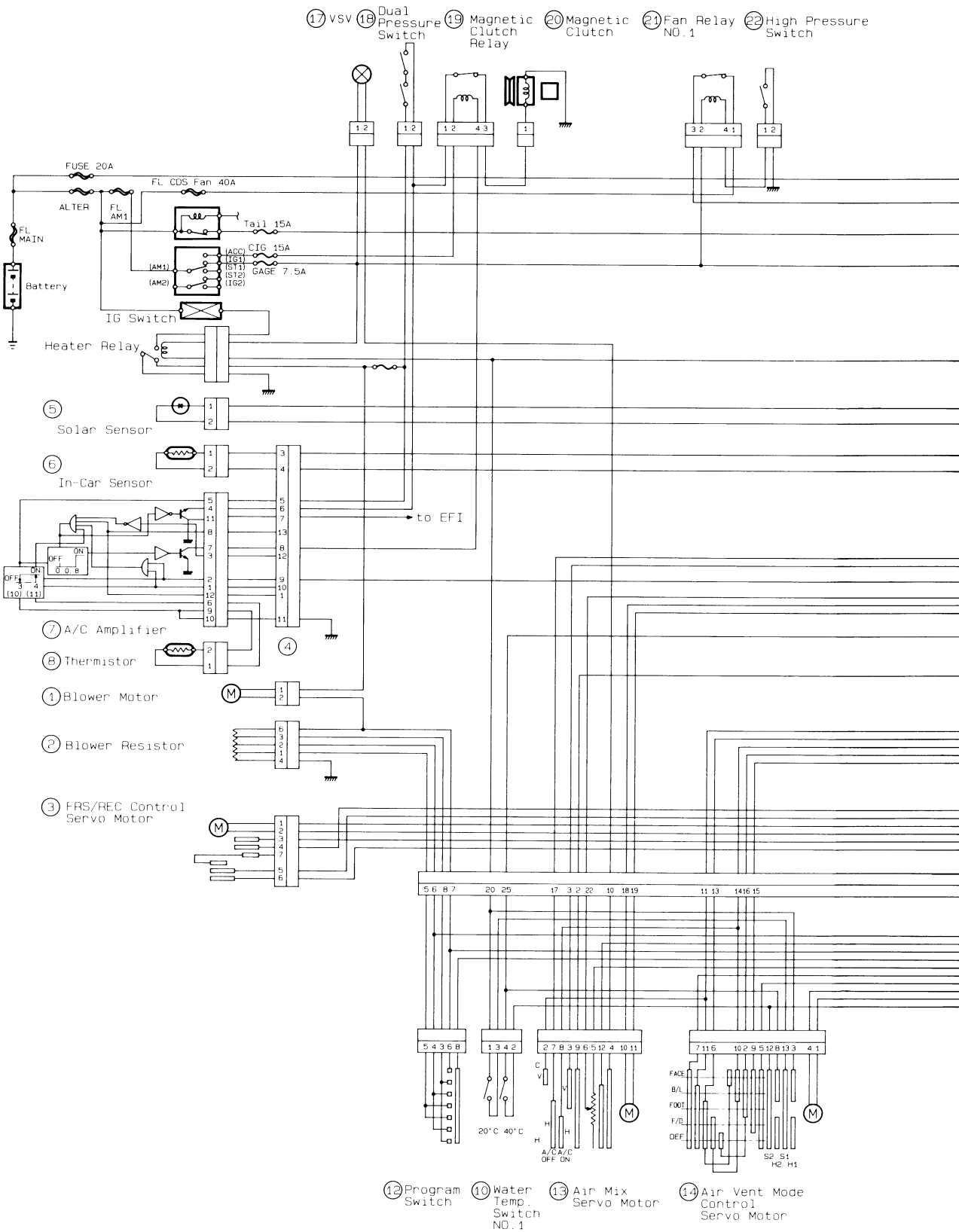

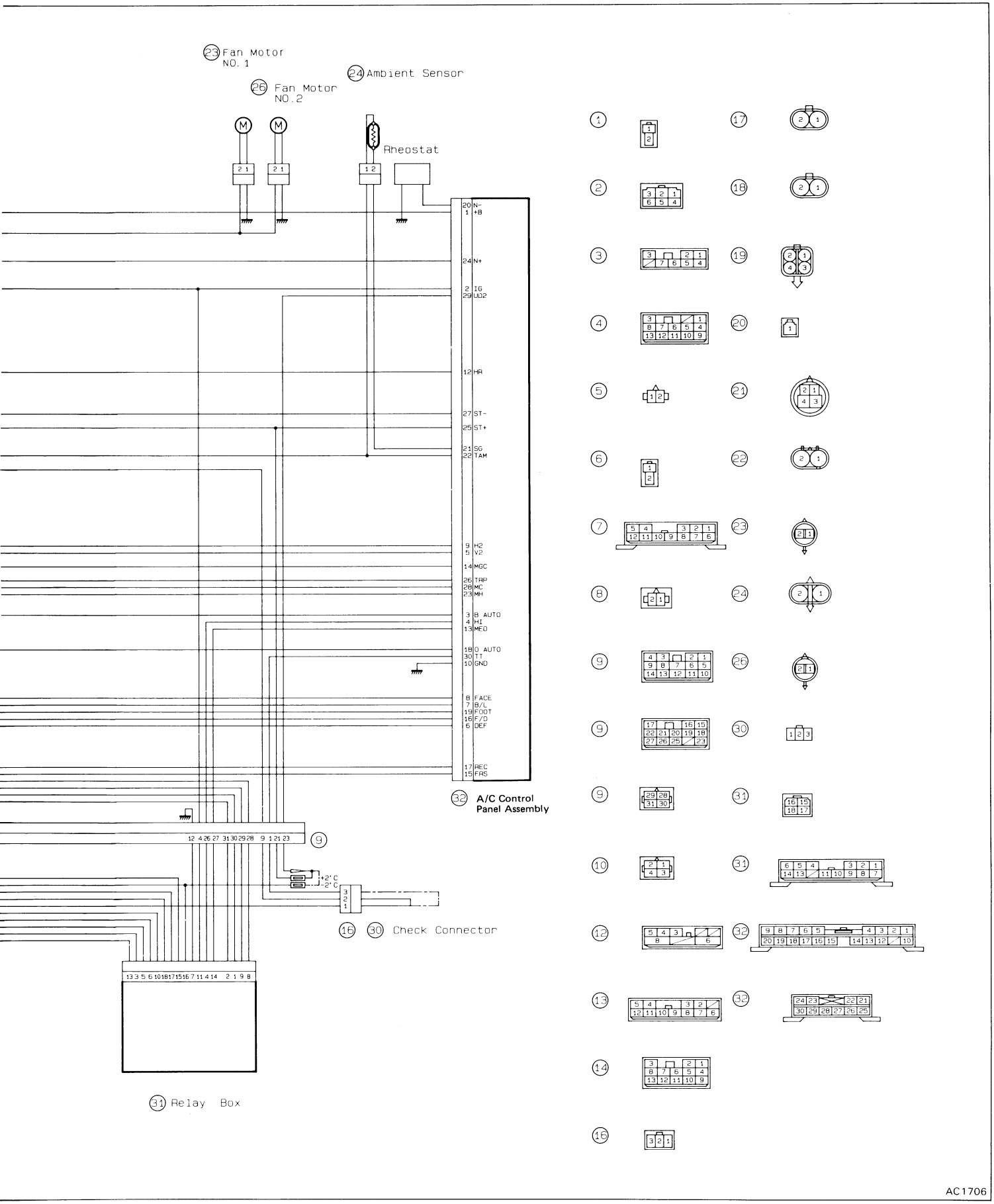
23 Fan Motor NO. 1
24 Ambient Sensor
26 Fan Motor NO. 2
Rheostat
20 N-
1 +B
24 N+
2 IG
29 UO2
12 HR
27 ST-
25 ST+
21 SG
22 TAM
9 H2
5 V2
14 MGC
26 TRP
28 MC
23 MH
3 B AUTO
4 HI
13 MED
18 O AUTO
30 TT
10 GND
8 FACE
7 B/L
19 FOOT
16 F/D
6 DEF
17 REC
15 FRS
32 A/C Control Panel Assembly
12 4 26 27 31 30 29 28 9 1 21 23
9
+2°C
-2°C
16 30 Check Connector
13 3 5 6 10 18 17 15 16 7 11 4 14 2 1 9 8
31 Relay Box
AC1706

SYSTEM COMPONENTS

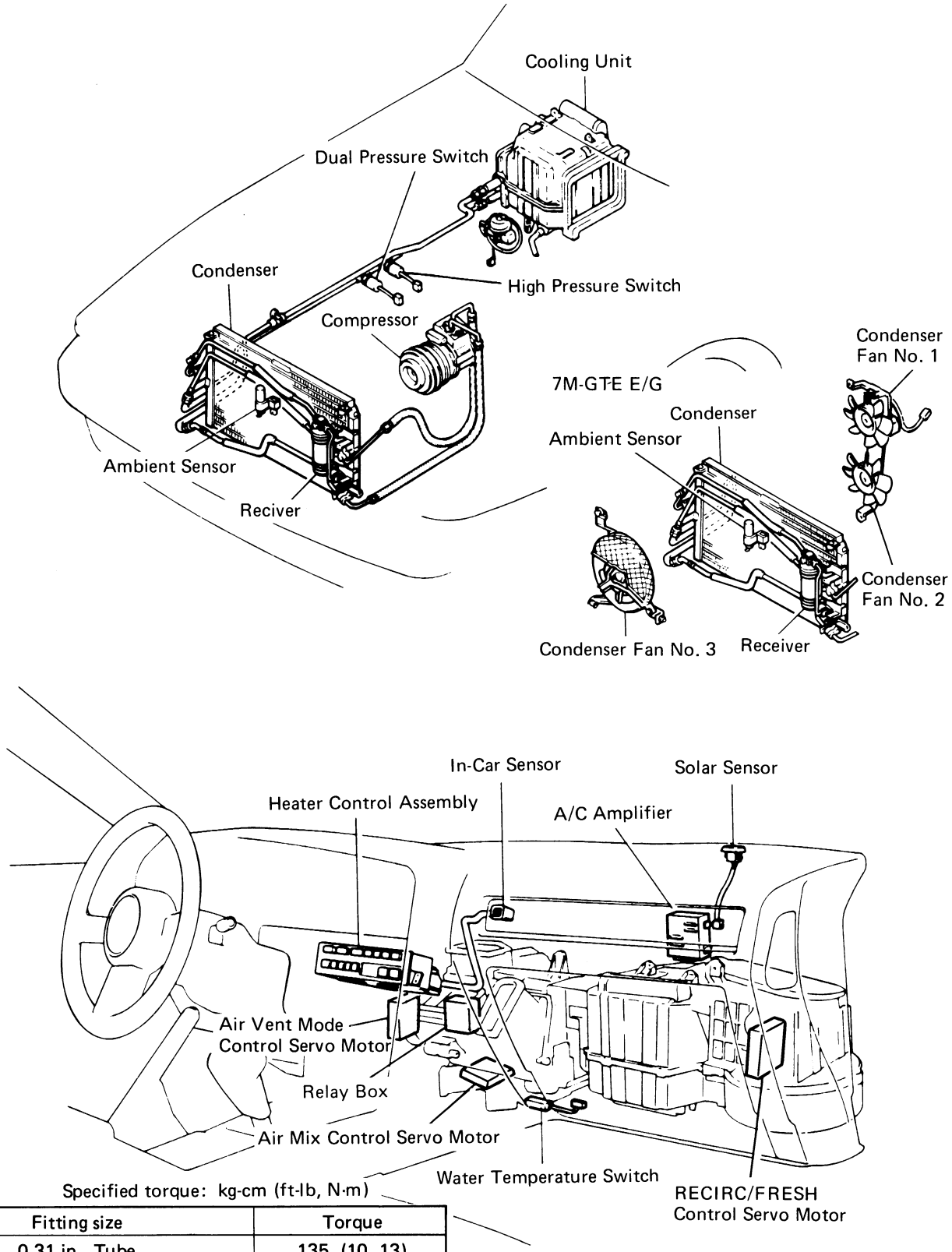

Specified torque: kg-cm (ft-lb, N·m)

Fitting size		Torque
0.31 in. Tube		135 (10, 13)
0.50 in. Tube		225 (16, 22)
0.62 in. Tube		325 (24, 32)
Bolted Type	(For Compressor)	250 (18, 25)
	(For Condenser)	250 (18, 25)

AC1708

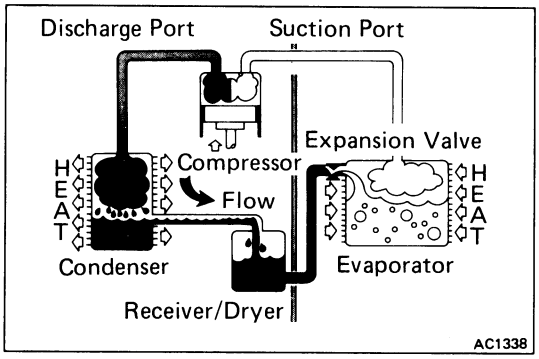

GENERAL DESCRIPTION

REFRIGERATION CYCLE

1. The compressor discharges high temperature and high pressure refrigerant containing the heat absorbed from the evaporator plus the heat created by the compressor in a discharge stroke.
2. This gaseous refrigerant flows into the condenser. In the condenser, the gaseous refrigerant condenses into liquid refrigerant.
3. This liquid refrigerant flows into the receiver which stores and filters the liquid refrigerant till the evaporator requires the refrigerant.
4. The liquid refrigerant is changed by the expansion valve into a low temperature, low pressure liquid and gaseous mixture.
5. This cold and foggy refrigerant flows to the evaporator. Vaporizing the liquid in the evaporator, the heat from the warm air stream passing through the evaporator core is transferred to the refrigerant.

   All the liquid is changed into the gaseous refrigerant in the evaporator and only heat-laden gaseous refrigerant is drawn into the compressor. Then the process is repeated again.

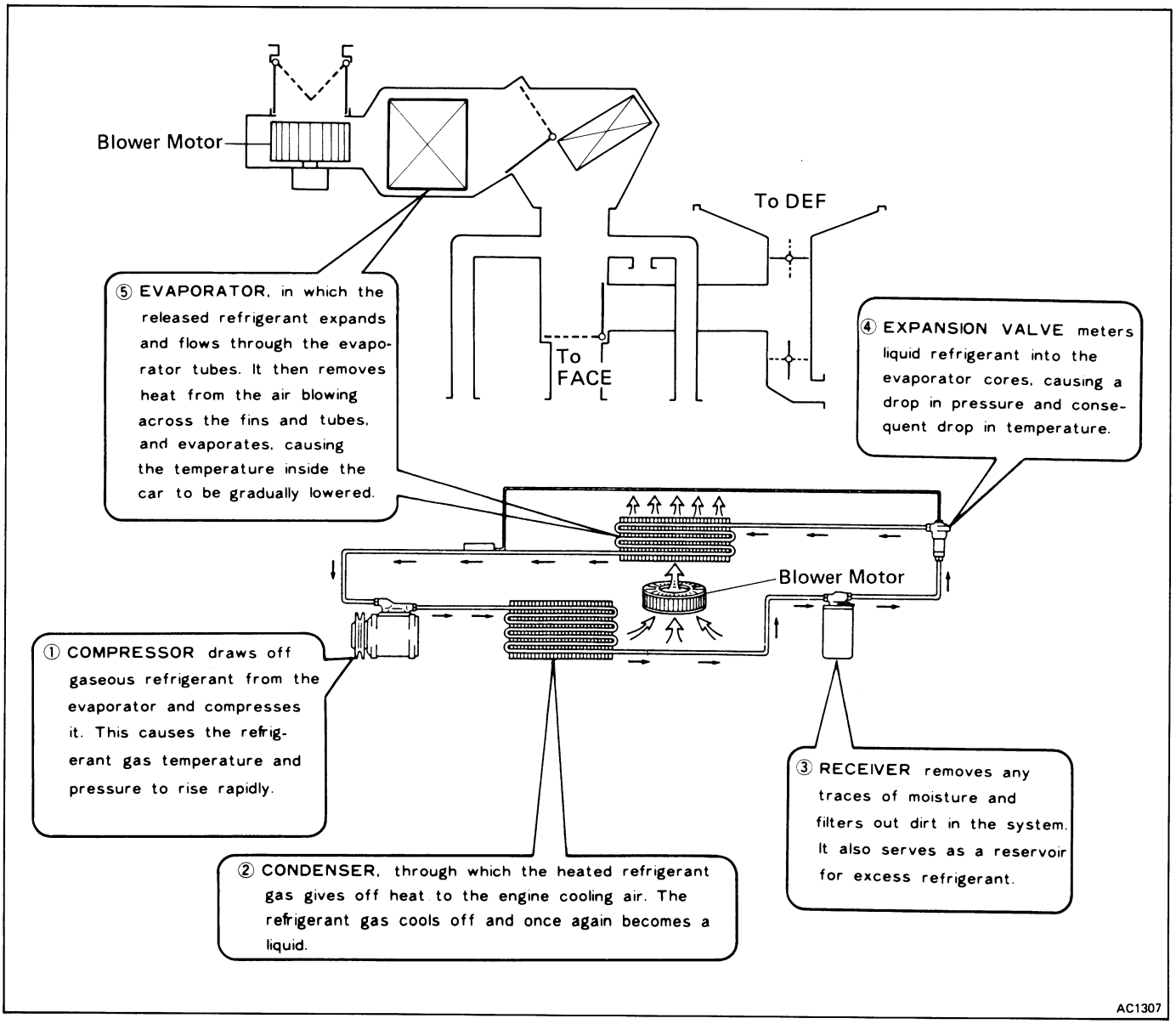

1. PRINCIPLE OF A/C ELECTRICAL CIRCUIT

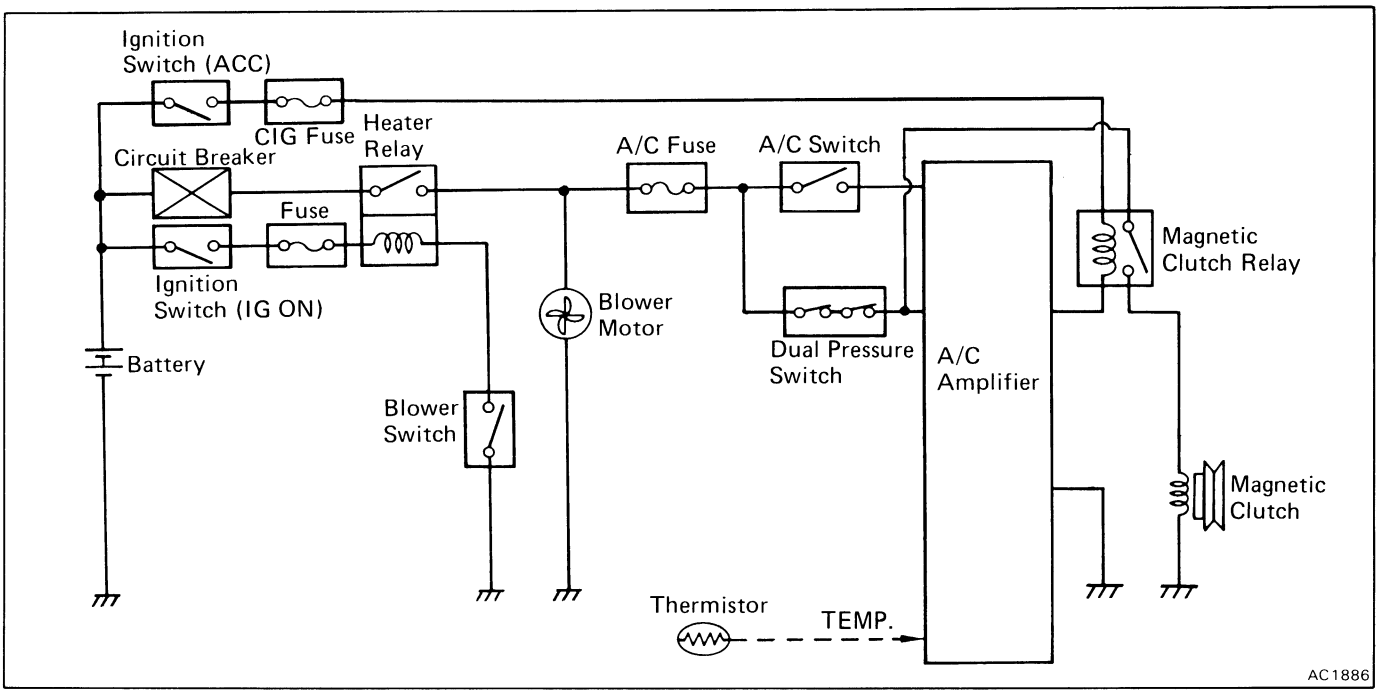

2. HOW IS THE MAGNETIC CLUTCH ENERGIZED?

The general process until the magnetic clutch is energized is shown below.

1. Ignition Switch "ON"
2. Blower Switch "ON" ⟶ Heater Relay "ON" (Blower Motor "RUN")
3. A/C Switch "ON" ⟶ A/C Amplifier "ON" (A/C Amp. Main Power Supply)
4. Dual Pressure Switch "ON":
   Refrigerant Condition (2.1 kg/cm^2 (30 psi, 206 kPa) less than 27 kg/cm^2 (384 psi, 2,648 kPa))
5. Thermistor supplies temperature signal of evaporator to A/C amplifier.
6. VSV "ON" ⟶ E/G Idle-up
7. Magnetic Clutch Relay "ON"
8. Temperature Sensor "ON":
   Temperature of Temperature Sensor is less than 180°C (356°F).
9. Magnetic Clutch "ON"
10. Revolution Detecting Sensor supplies RPM signal of compressor to A/C amplifier.

If compressor is not locked, magnetic clutch is continuously energized.

PRINCIPLE OF AUTOMATIC AIR CONDITIONING SYSTEM

1. WHAT'S AUTOMATIC AIR CONDITIONING SYSTEM?

Automatic air conditioning system automatically controls the interior room temperature, the blower speed, the air vent mode, etc, according to setting temperature of hope. It keeps good air condition at all seasons.

2. HOW FUNCTIONS DOES AUTOMATIC AIR CONDITIONING SYSTEM HAVE?

Automatic air conditioning system has four main functions as follows.

(1) Interior Room Temperature Control System & Blower Speed Control System

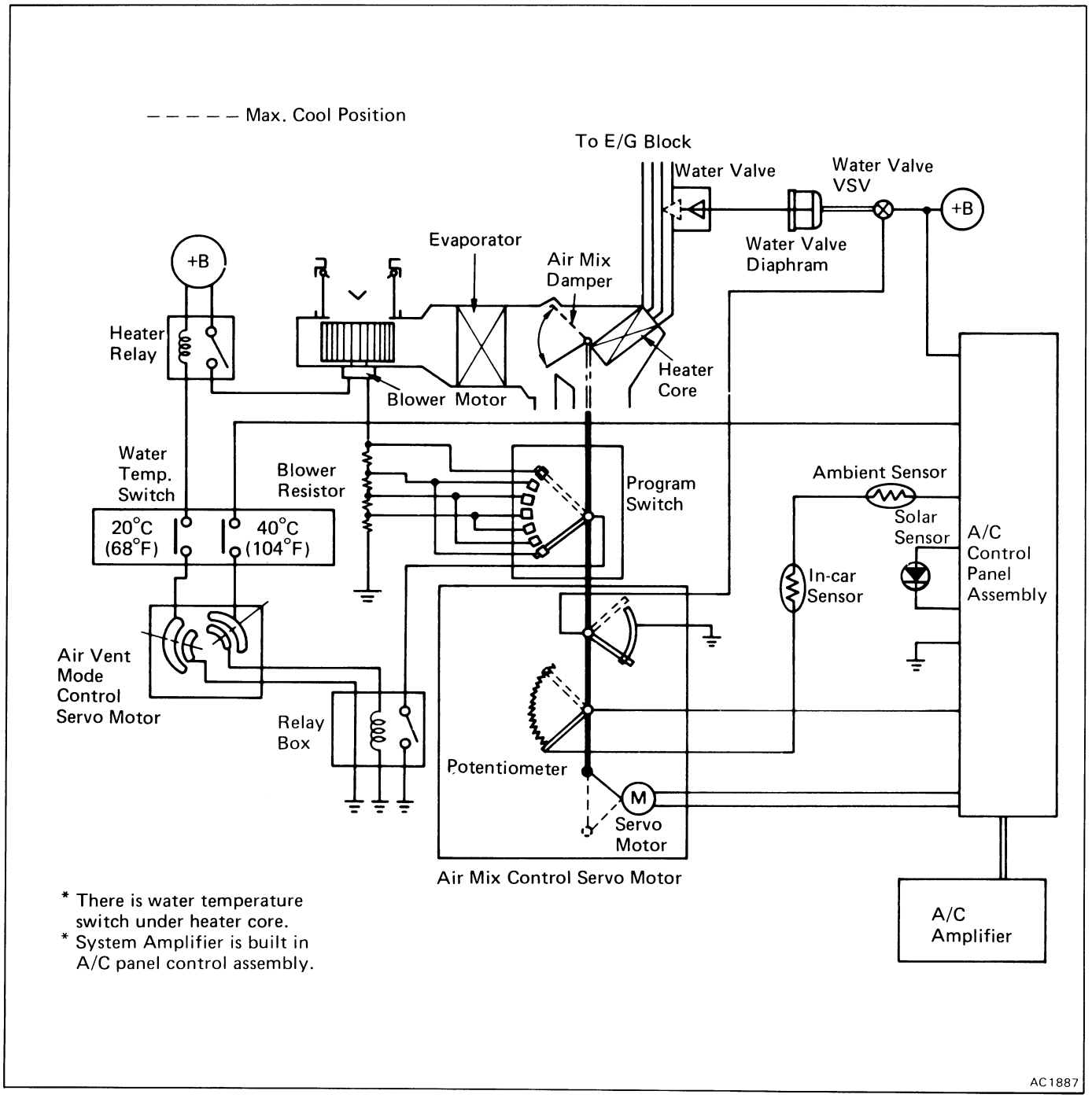

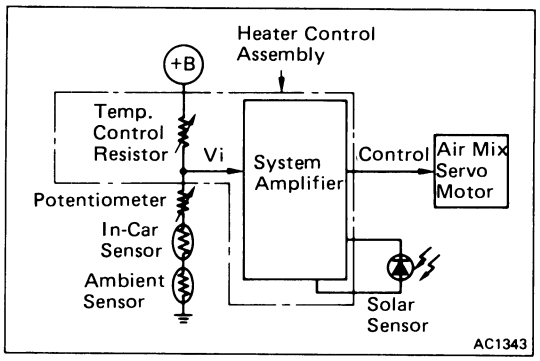

Interior Room Temperature Control System & Blower Speed Control System (Cont'd)

(a) Interior Room Temperature Control System

For example, now interior room temperature is rising.

① Resistance value of in-car sensor decreases.

② Voltage of Vi decreases.

③ System amplifier rotates a motor in air mix control servo motor.

④ Air mix control servo motor shaft moves towards max. cool side.

⑤ Resistance value of potentiometer increases.

⑥ Voltage of Vi increases in original condition.

⑦ Air mix control servo motor shaft stops.

* When air mix control servo motor shaft moves at max. cool position, water valve VSV is off. And water valve is close.

(b) Blower Speed Control System

As aforeside, according to moving of air mix control servo motor, blower speed is controlled.

Warm-up System condition: Blower Switch AUTO position.
Air Mode Switch is AUTO or HEAT position.

This system has a function that the blower unit blows cold air to your feet.

Water Temperature	Water Temperature Switch	Blower Motor
Less than 20°C (68°F)	20°C (68°F) Switch → OFF	OFF
20°C – 40°C (68°F – 104°F)	20°C (68°F) Switch → ON 40°C (104°F) Switch → OFF	Low Only
More than 40°C (104°F)	40°C (104°F) Switch → ON	Automatic Control

(2) Air Vent Mode Control System & RECIRC/FRESH Control System

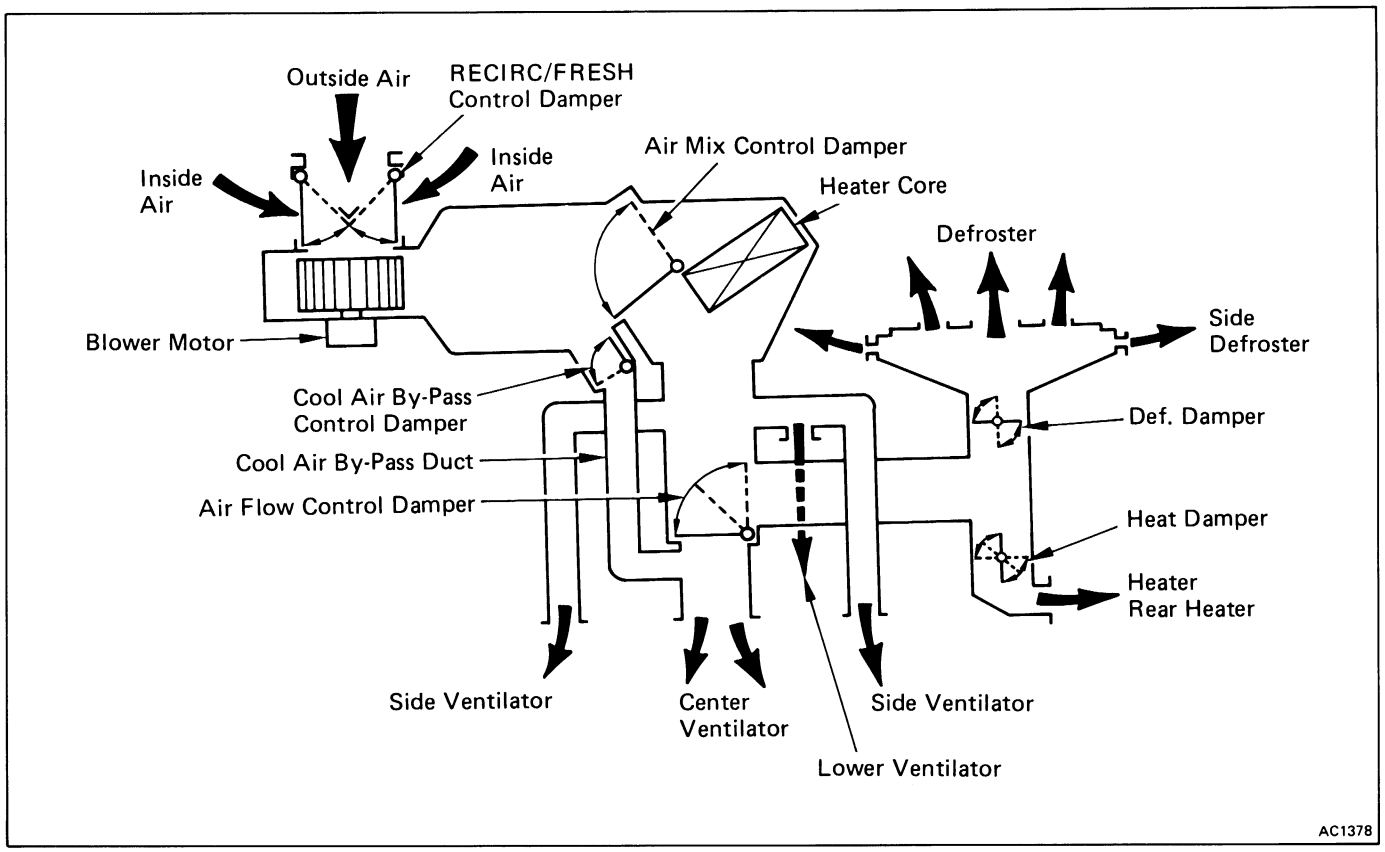

(a) Air Vent Mode Control System

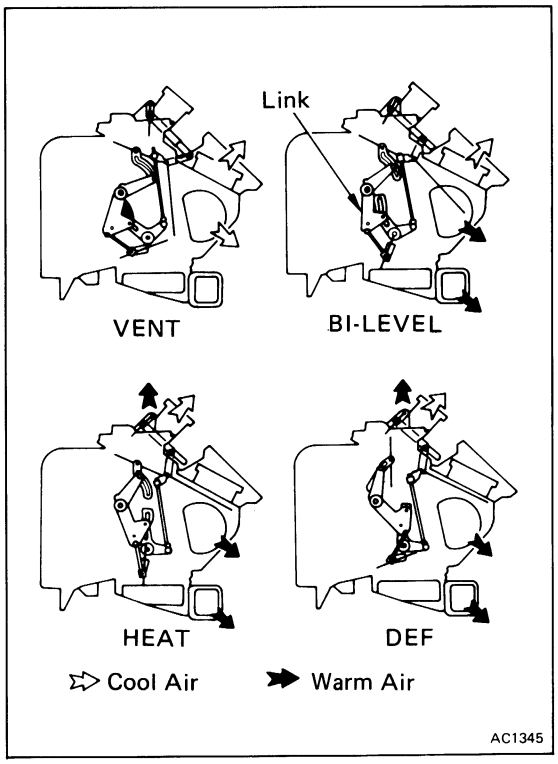

Air-flow changes as follows.

1. Air mix control servo motor shaft moves.
2. Program switch is changed. (Signal is transmitted to relay box)
3. Relay box rotates a motor in air vent mode control servo motor.
4. Servo motor links move.
5. Each damper moves.
6. As aforeside, the air flows as shown left illustration.

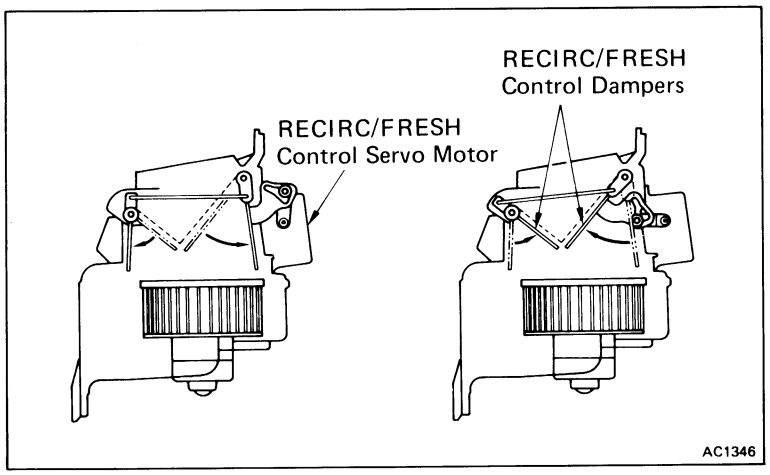

(b) RECIRC/FRESH Control System
RECIRC and FRESH changes as follows.

① RECIRC/FRESH control switch is pushed.

② System amplifier rotates a motor in RECIRC/FRESH control servo motor.

③ RECIRC/FRESH control dampers moves as shown left illustration.

SPECIAL TOOLS AND EQUIPMENT

Tool	SST No.	Use
Manifold gauge set	07110-58011	To evacuate and charge system
Ohmmeter	—	To perform electrical diagnosis
Voltage meter	—	To perform electrical diagnosis
Ammeter	—	To perform electrical diagnosis
Magnetic clutch stopper	07112-76060	To remove and install pressure plate
Magnetic clutch remover	07112-66040	To remove pressure plate
Snap ring pliers (External type)	07114-84020	To remove and install rotor and stator

SSM (SPECIAL SERVICE MATERIALS)

Part Name	Part No.	Use etc.
DENSOOIL 6,	07117-68040	Compressor
SUNISO No.5GS or qeuivalent	———	

TROUBLESHOOTING

You will find the troubles easier using the table well shown below. In this table, each number shows the priority of causes in troubles. Check each part in order. If necessary, replace these parts.

See Page / Parts Name / Trouble	Fuses	Circuit Breaker	Main Relay	Wiring	Wiring Connection	Refrigerant in System	Heater Relay	Blower Motor	Blower Resistor	Water Temp. SW 20°C (68°F)	Water Temp. SW 40°C (104°F)	Dual Pressure Switch	High Pressure Switch	Magnetic Clutch	Magnetic Clutch Relay	A/C Amplifier	Compressor	Condenser	Evaporator	Expansion Valve	Receiver	Thermistor	Drive Belt	A/C Switch
	AC-4,6	AC-4,6	AC-4,6	AC-4,6	AC-4,6	AC-17	AC-31		AC-30	AC-32		AC-32	AC-32	AC-22	AC-31	AC-40	AC-22	AC-28	AC-35	AC-33	AC-28	AC-37	AC-20	AC-38
No blower operation	1	1		2	2		3	4	5	3	5													
No cool air come out	1	1		2	2	1	2					2		3	3	4	4	5	5	5	5	5	4	3
No warm air come out	1	1		2	2		3			3	4													
Cool air comes out inter-mittently				3	3									1		5			2				1	
Limited amount of cool air at high speed																						1		
Cool air comes out only at high speed						4											3	1					2	
Insufficient velocity of cool air								4								5			1					
Insufficient cooling						6								3		9	4	1		5	7	6	2	
No blower control				7	7				1	6	6					5								

TROUBLESHOOTING (Cont'd)

2						4	3	5	Blower Switch	AC-38
5						4	3		Temp. Control System	AC-32
5						4	4		Air Vent Mode Switch	AC-38
5						4	4		REC/FRE Control Switch	AC-38
3						4	4		In-Car Sensor	AC-42
3						4	4		Ambient Sensor	AC-42
3						4	4		Solar Sensor	AC-42
3						4	4		Potentiometer	AC-43
								6	Program Switch	AC-4,6
4						4	4		Air Mix Control Servo	AC-45
4								5	Air Vent Mode Control Servo	AC-44
4						4	4		REC/FRE Control Servo	AC-44
4						4	4	7	System Amplifier	AC-40
	8					3			Water Valve VSV	
	8					3			Water Valve Diaphram	
	8					3			Water Valve	
							3		Leak in System	
					4				Excessive Moisture in System	AC-19
			5						Air in System	AC-19
	7								Air or Excessive Compressor Oil in System	AC-19
		3							Air Inlet Blocked	
		2							Air Leakage from Cooling Unit or Air Duct	AC-19
1									Servo Motor Links	AC-43

Checking of Refrigeration System with Manifold Gauge

This is a method in which the trouble is located by using a manifold gauge. Read the manifold gauge pressure with the following conditions are established:

(a) Temperature at the air inlet is 30 — 35°C (86 — 95°F)

(b) Engine running at 1,500 rpm

(c) Blower fan speed switch set at high speed

(d) Temperature control lever set at cool side

HINT: It should be noted that the gauge indications may vary slightly due to ambient temperature conditions.

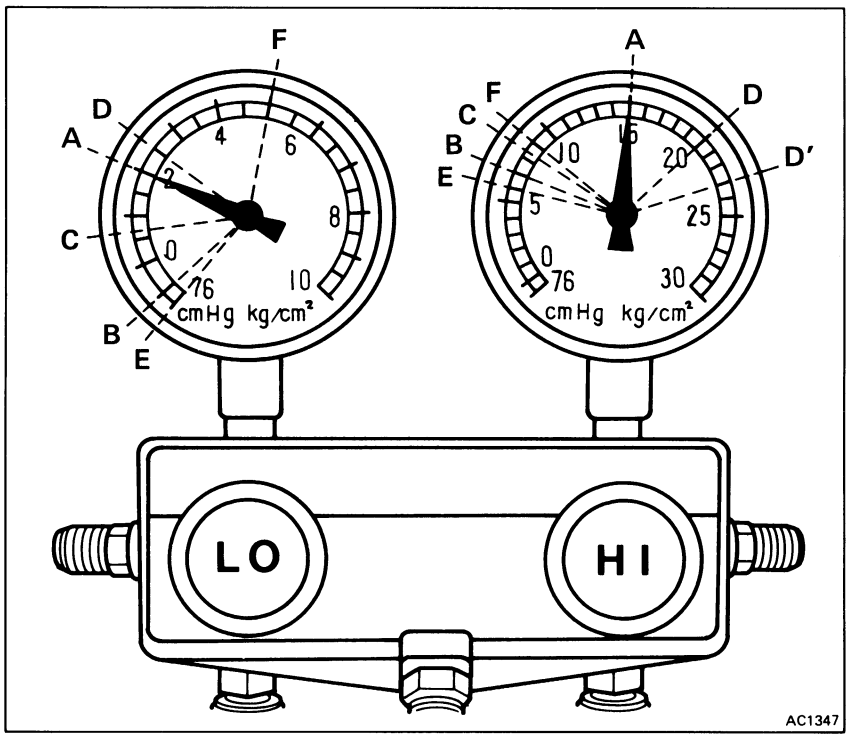

NORMALLY FUNCTIONING REFRIGERATION SYSTEM

Gauge reading:

Low pressure side

1.5 — 2.0 kg/cm²
(21 — 28 psi, 147 — 196 kPa)

High pressure side

14.5 — 15.0 kg/cm²
(206 — 213 psi, 1,422 — 1,471 kPa)

Each pointer of manifold gauge point to position **A**

No.	Trouble	Condition	Position of Pointers
1	Moisture present in refrigeration system	Periodically cools and then fails to cool	Between **A** and **B**
2	Insufficient refrigerant	Insufficient cooling	**C**
3	Poor circulation of refrigerant	Insufficient cooling	**C**
4	Refrigerant overcharge or insufficient cooling of condenser	Does not cool sufficiently	**D**
5	Expansion valve improperly mounted, heat sensing tube defective (opens too wide)	Insufficient cooling	**D**
6	Air present in refrigeration system	Does not cool sufficiently	Low is **D** High is **D'**
7	Refrigerant does not circulate	Does not cool (Cools from time to time in some cases)	**E**
8	Insufficient compression	Does not cool	**F**

Checking of Refrigeration System with Manifold Gauge (Cont'd)

No.	Symptom seen in refrigeration system	Probable cause	Diagnosis	Remedy
1	During operation, pressure at low pressure side sometimes becomes a vacuum and sometimes normal	Moisture entered in refrigeration system freezes at expansion valve orifice and temporarily stops cycle, but normal state is restored after a time when the ice melts	Drier in oversaturated state ↓ Moisture in refrigeration system freezes at expansion valve orifice and blocks circulation of refrigerant	(1) Replace receiver and drier (2) Remove moisture in cycle through repeated vacuum purging (3) Charge refrigerant to proper amount
2	Pressure low at both low and high pressure sides Bubbles seen in sight glass Insufficient cooling performance	Gas leakage at some place in refrigeration system	Insufficient refrigerant in system ↓ Refrigerant leaking	(1) Check with leak detector and repair (2) Charge refrigerant to proper amount
3	Pressure low at both low and high pressure sides Frost on tubes from receiver to unit	Refrigerant flow obstructed by dirt in receiver	Receiver clogged	Replace receiver
4	Pressure too high at both low and high pressure sides	Unable to develop sufficient performance due to excessive refrigerant in system Condenser cooling insufficient	Excess refrigerant in cycle → refrigerant overcharged Condenser cooling insufficient → condenser fins clogged or fan motor faulty	(1) Clean condenser (2) Check fan motor operation (3) If (1) and (2) are normal, check refrigerant amount HINT: Vent out refrigerant through gauge manifold low pressure side by gradually opening valve.
5	Pressure too high at both low and high pressure sides Frost or large amount of dew on piping at low pressure side	Trouble in expansion valve or heat sensing tube not installed correctly Refrigerant flow out	Excessive refrigerant in low pressure piping ↓ Expansion valve opened too wide	(1) Check heat sensing tube installed condition (2) If (1) is normal, test expansion valve in unit (3) Replace if defective
6	Pressure too high at both low and high pressure sides	Air entered refrigeration system	Air present in refrigeration system ↓ Insufficient vacuum purging	(1) Replace receiver and drier (2) Check compressor oil to see if dirty or insufficient (3) Vacuum purge and charge new refrigerant

*Note at No. 6
These gauge indications are shown when the refrigeration system has been opened and the refrigerant charged without vacuum purging.

Checking of Refrigeration System with Manifold Gauge (Cont'd)

No.	Symptom seen in refrigeration system	Probable cause	Diagnosis	Remedy
7	Vacuum indicated at low pressure side, very low pressure indicated at high pressure side Frost or dew seen on piping before and after receiver and drier or expansion valve	Refrigerant flow obstructed by moisture or dirt in refrigerant freezing or adhering to expansion valve orifice Refrigerant flow obstructed by gas leakage from expansion valve heat sensing tube	Expansion valve orifice clogged ↓ Refrigerant does not flow	Allow to stand for some time and then restart operation to determine if trouble is caused by moisture or dirt. If caused by moisture refer to procedures Step 2 on page AC-18. If caused by dirt, remove expansion valve and clean off dirt by blowing with air. If unable to remove dirt, replace valve. Vacuum purge and charge new refrigerant to proper amount. For gas leakage from heat sensing tube, replace expansion valve.
8	Pressure too high at low pressure side Pressure too low at high pressure side	Internal leak in compressor	Compression defective ↓ Valve leaking or broken sliding parts (Piston, cylinder, gasket, etc.) broken	Repair or replace compressor

Discharging of Refrigeration System

Evacuating and Charging of Refrigeration System

(See Air Conditioning Fundamentals and Repairs Pub. No. 36950E)

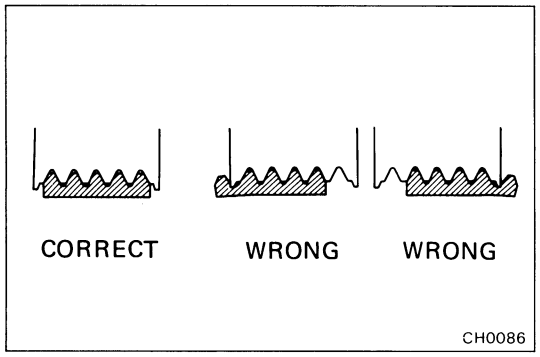

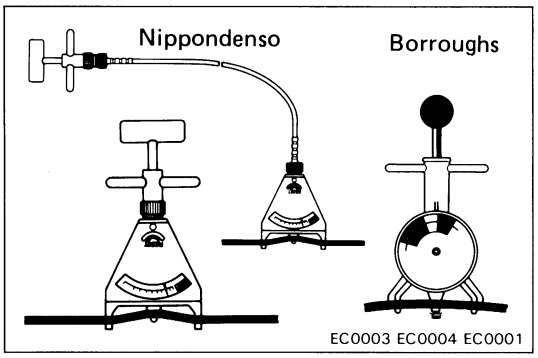

ON-VEHICLE INSPECTION

1. CHECK CONDENSER FINS FOR BLOCKAGE OR DAMAGE

If the fins are clogged, clean them with pressurized water.

CAUTION: Be careful not to damage the fins.

2. MAKE SURE THAT DRIVE BELT IS INSTALLED CORRECTLY

After installing the drive belt, check that it fits properly in the ribbed grooves.

3. CHECK DRIVE BELT TENSION

Using a belt tension gauge, check the drive belt tension.

Belt tension gauge:
Nippondenso BTG-20(95506-00020) or
Borroughs No.BT-33-73F

Drive belt tension:
New belt 160 ± 20 lb
Used belt 105 ± 10 lb

HINT:
- "New belt" refers to a belt which has been used less than 5 minutes on a running engine.
- "Used belt" refers to a belt which has been used on a running engine for 5 minutes or more.

4. START ENGINE

5. TURN ON A/C SWITCH

Check that the A/C operates at each position of the blower switch.

6. CHECK MAGNETIC CLUTCH OPERATION

If magnetic clutch does not engage, check the A/C fuse.

7. CHECK THAT IDLE INCREASES

When the magnetic clutch engages, engine revolution should increase.

Standard idle-up rpm:

	M/T (N range)	A/T (D range)
7M-GTE E/G	900 rpm	700 rpm
7M-GE E/G	900 rpm	650 rpm

8. CHECK CONDENSER FAN MOTOR ROTATES

9. CHECK AMOUNT OF REFRIGERANT

If you can see bubbles in the sight glass, additional refrigerant is needed. (See page AC-21)

10. IF NO COOLING OR IT IS INSUFFICIENT, INSPECT FOR LEAKAGE

Using a gas leak detector, inspect each component of the refrigeration system.

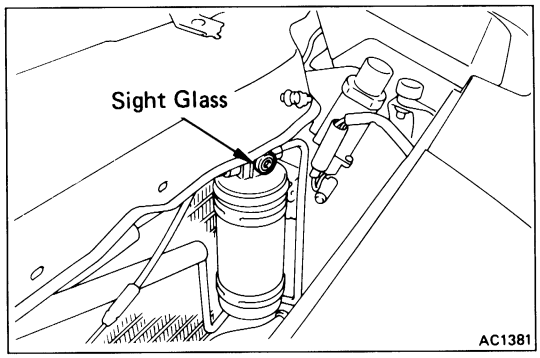

REFRIGERATION SYSTEM

Checking of Refrigerant Volume

1. **RUN ENGINE AT APPROX. 2,000 RPM**
2. **OPERATE AIR CONDITIONER AT MAXIMUM COOLING FOR A FEW MINUTES**
3. **CHECK AMOUNT OF REFRIGERANT**

   Observe the sight glass on the receiver.

Item	Symptom	Amount of refrigerant	Remedy
1	Bubbles present in sight glass	Insufficient	Check for leak with gas leak detector
2	No bubbles present in sight glass	Empty, proper or too much	Refer to items 3 and 4
3	No temperature difference between compressor inlet and outlet	Empty or nearly empty	Evacuate and charge system. Then check for leak with gas leak detector
4	Temperature between compressor inlet and outlet is noticeably different	Proper or too much	Refer to items 5 and 6
5	Immediately after the air conditioner is turned off, refrigerant in sight glass stays clear	Too much	Discharge the excess refrigerant to specified amount
6	When the air conditioner is turned off, refrigerant foams and then stays clear	Proper	–

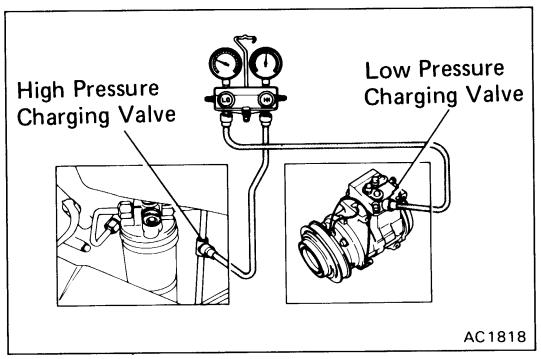

Installation of Manifold Gauge Set

1. **CLOSE BOTH HAND VALVES OF MANIFOLD GAUGE SET**
2. **INSTALL CHARGING HOSES OF GAUGE SET TO CHARGING VALVES**

   Connect the low pressure hose (Blue) to the low pressure charging valve and the high pressure hose (Red) to the high pressure charging valve. Tighten the hose nuts by hand.

   HINT: Do not apply compressor oil to the seat of the connection.

COMPRESSOR

ON-VEHICLE INSPECTION

1. **INSTALL MANIFOLD GAUGE SET**
   (See page AC-21)

2. **RUN ENGINE AT APPROX. 1,500 RPM**

3. **CHECK COMPRESSOR FOR FOLLOWING:**
   (a) High pressure gauge reading is not lower and low pressure gauge reading is not higher than normal.
   (b) Metallic sound
   (c) Leakage from shaft seal

   If defects are found, repair the compressor.

4. **CHECK MAGNETIC CLUTCH**
   (a) Inspect the pressure plate and the rotor for signs of oil.
   (b) Check the clutch bearings for noise and grease leakage.

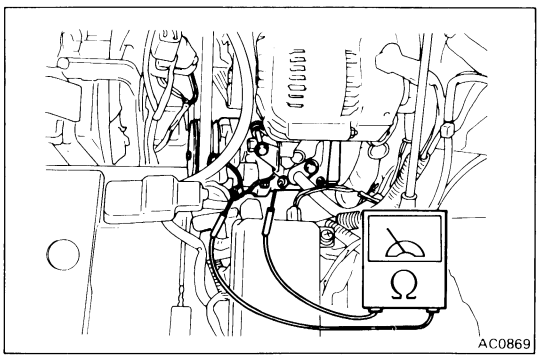

(c) Using an ohmmeter, measure the resistance of the stator coil between the clutch lead wire and ground.

Standard resistance: 2.7 — 3.1 Ω at 20°C (68°F)

If resistance value is not as specified, replace the coil.

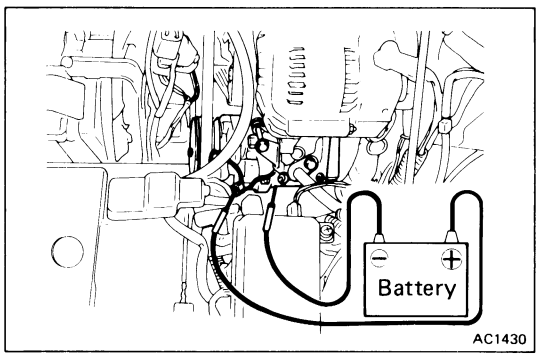

(d) Connect the positive (+) lead from the battery to terminal 1, check that the magnetic clutch is energized.

If magnetic clutch is not energized, replace the coil.

NOTICE: Do not short the positive (+) lead wire on the vehicle by applying battery voltage.

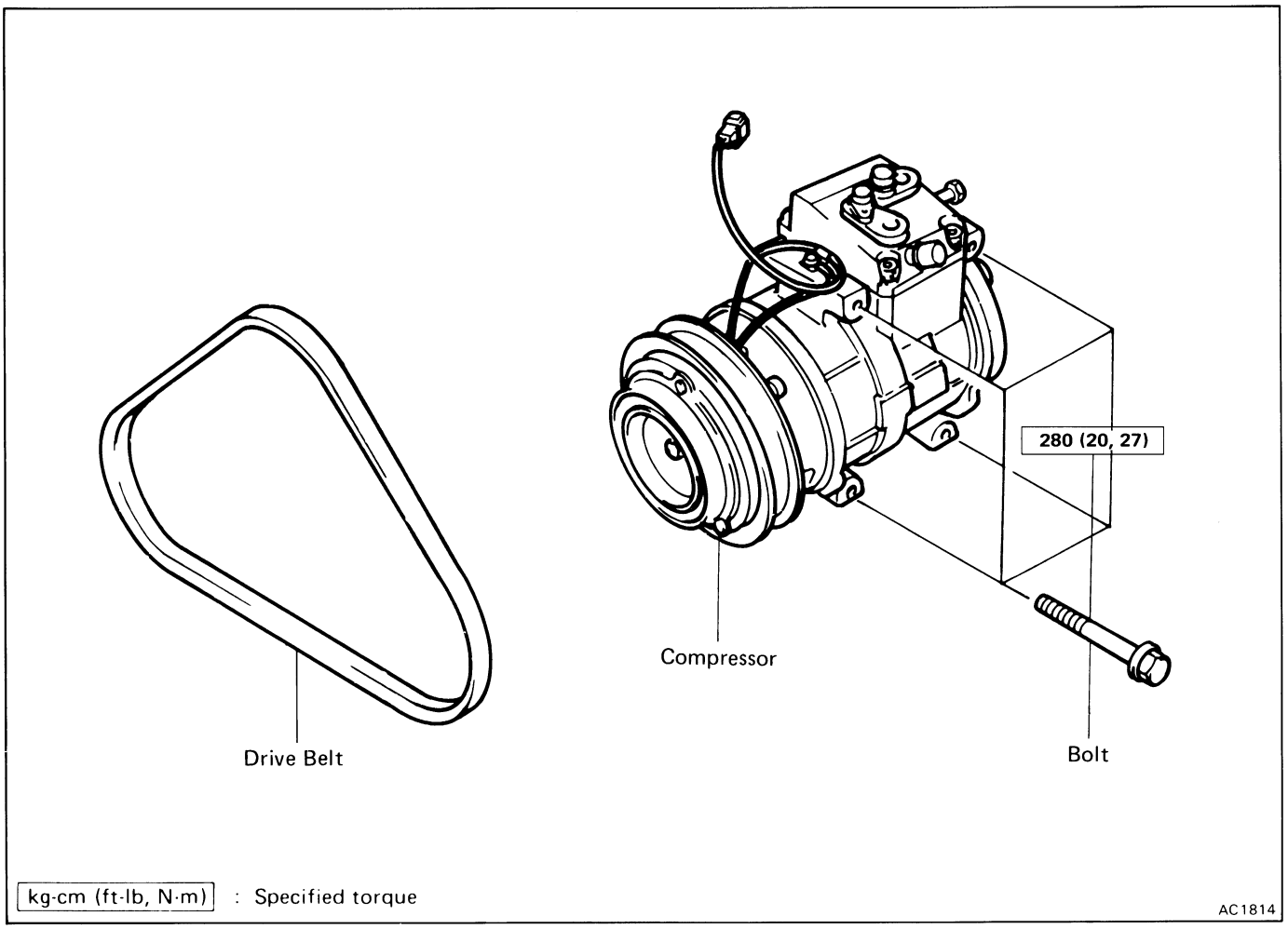

REMOVAL OF COMPRESSOR

1. **RUN ENGINE AT IDLE SPEED WITH AIR CONDITIONING ON FOR 10 MINUTES**

2. **STOP ENGINE**

3. **DISCONNECT NEGATIVE AND POSITIVE CABLE FROM BATTERY**

4. **REMOVE BATTERY**

5. **DISCONNECT CLUTCH LEAD WIRE FROM WIRING HARNESS**

6. **DISCHARGE REFRIGERANT FROM REFRIGERATION SYSTEM**

7. **DISCONNECT TWO HOSES FROM COMPRESSOR SERVICE VALVES**

   Cap the open fitting immediately to keep moisture out of the system.

8. **REMOVE COMPRESSOR**

   (a) Loosen the drive belt.

   (b) Remove the compressor mounting bolts and the compressor.

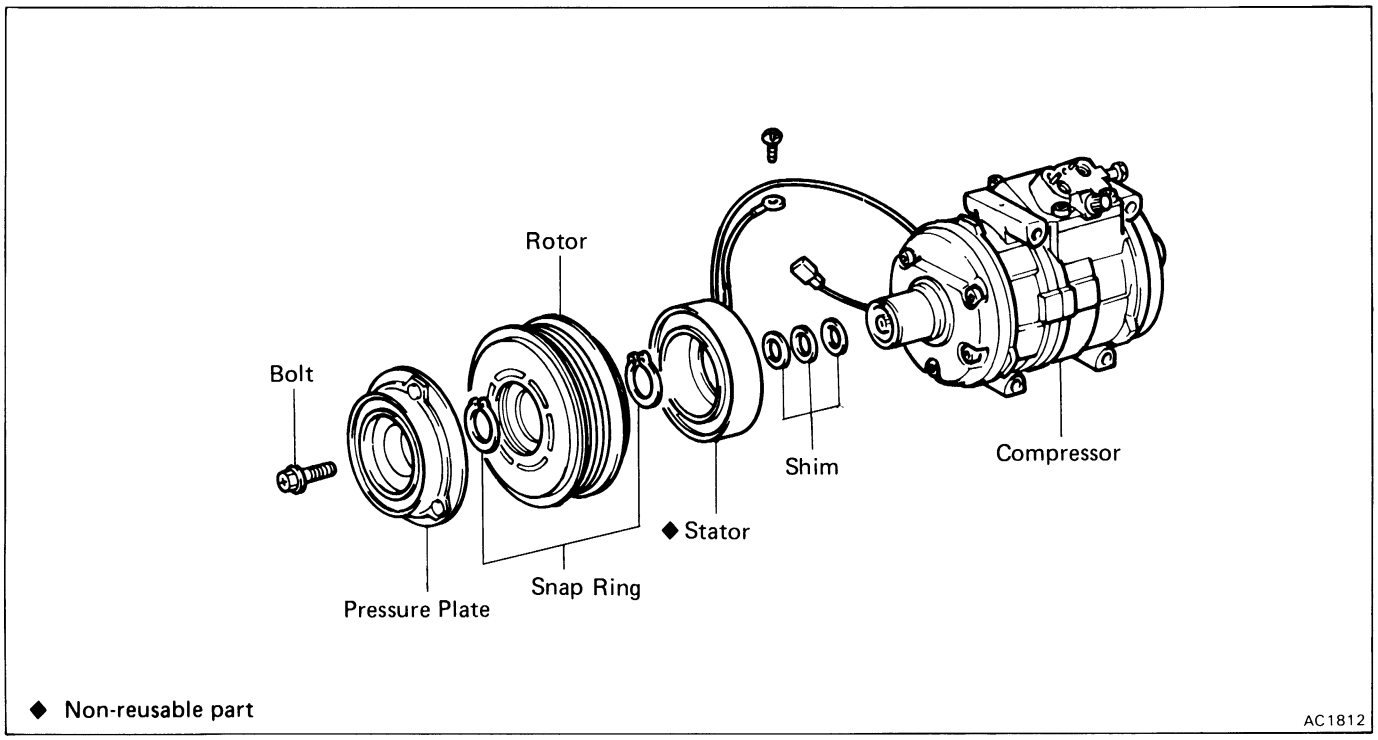

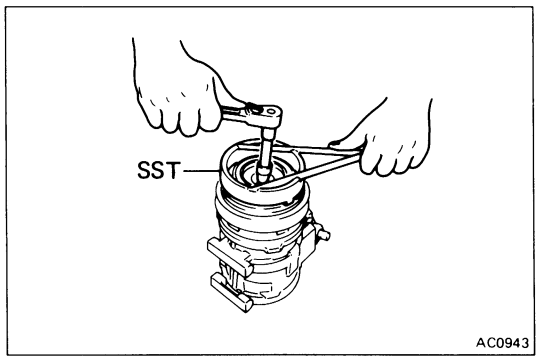

DISASSEMBLY OF MAGNETIC CLUTCH

1. REMOVE PRESSURE PLATE

(a) Using SST and socket, remove the shaft bolt.

SST 07112-76060

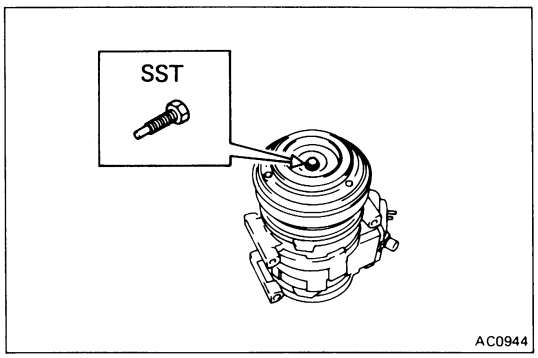

(b) Install SST to the pressure plate.

SST 07112-66040

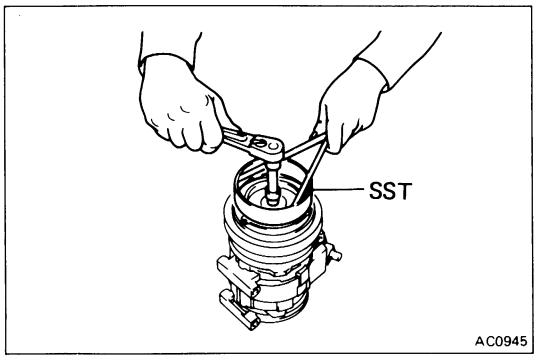

(c) Using SST and the socket, remove the pressure plate.

SST 07112-76060

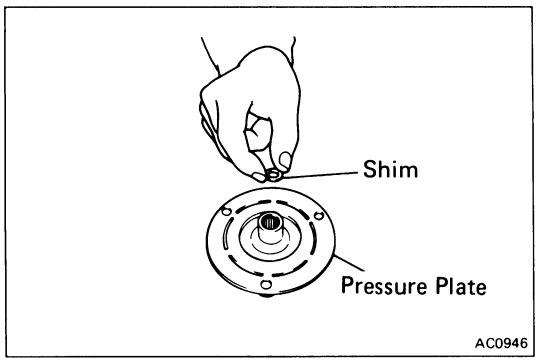

(d) Remove the shims from the pressure plate.

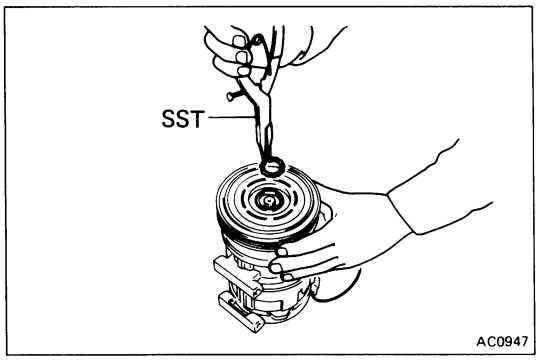

2. REMOVE ROTOR

(a) Using SST, remove the snap ring.

SST 07114-84020

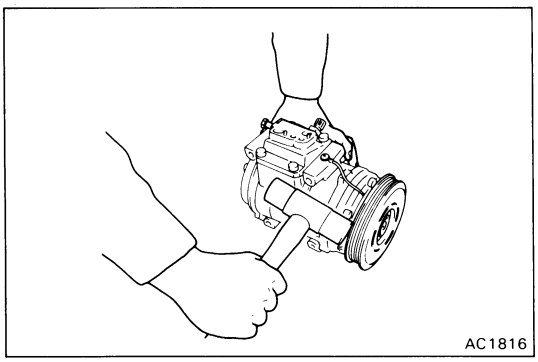

(b) Using a plastic hammer, tap the rotor off the shaft.

NOTICE: Be careful not to damage the pulley when tapping on the rotor.

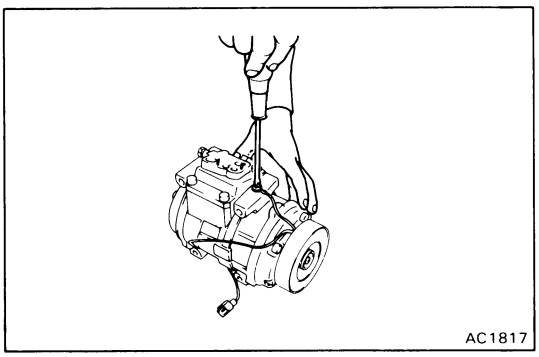

3. REMOVE STATOR

(a) Disconnect the stator lead wire from the compressor housing.

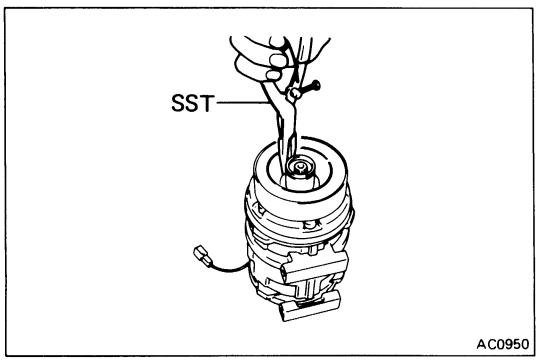

(b) Using SST, remove the snap ring.

SST 07114-84020

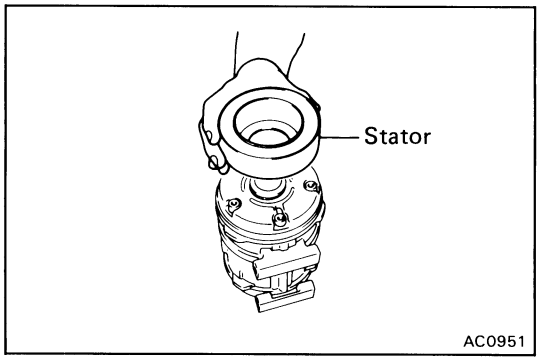

(c) Remove the stator.

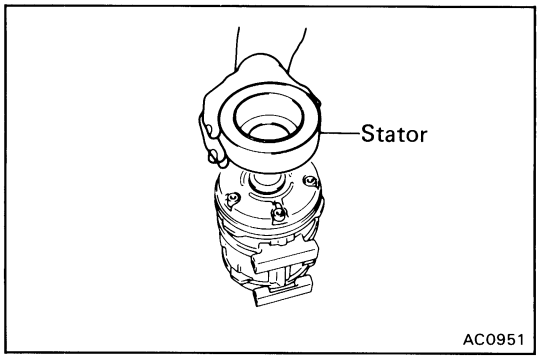

ASSEMBLY OF MAGNETIC CLUTCH

1. INSTALL STATOR

(a) Install the stator on the compressor.

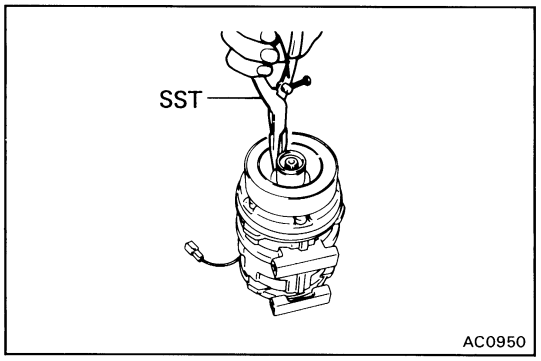

(b) Using SST, install the new snap ring.

SST 07114-84020

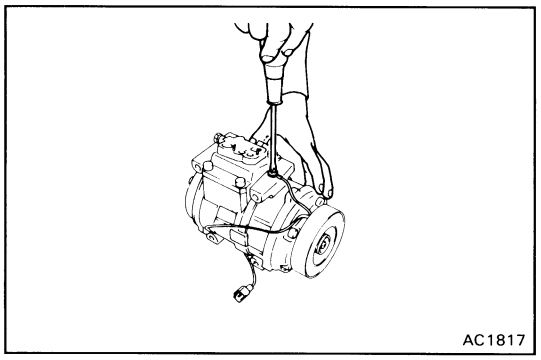

(c) Connect the stator lead wires to the compressor housing.

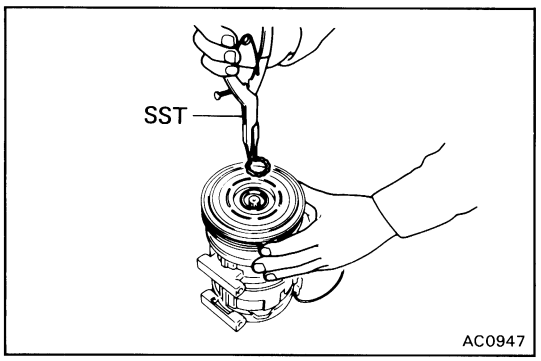

2. INSTALL ROTOR

(a) Install the rotor on the compressor shaft.

(b) Using SST, install the new snap ring.

SST 07114-84020

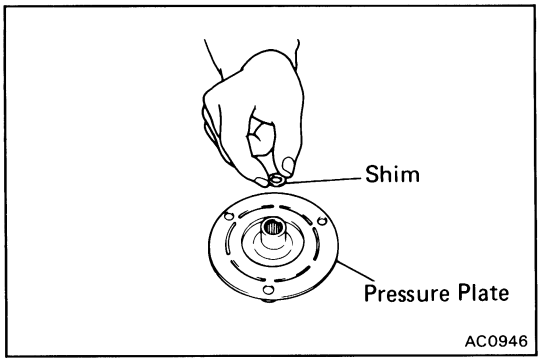

3. **INSTALL PRESSURE PLATE**

(a) Install the shims to the pressure plate.

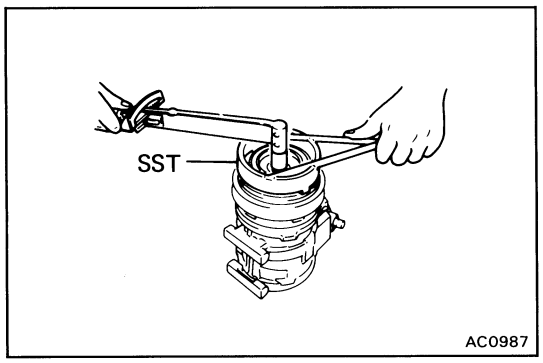

(b) Using SST and torque wrench, install the shaft bolt.

SST 07112-76060

Torque: 140 kg-cm (10 ft-lb, 14 N·m)

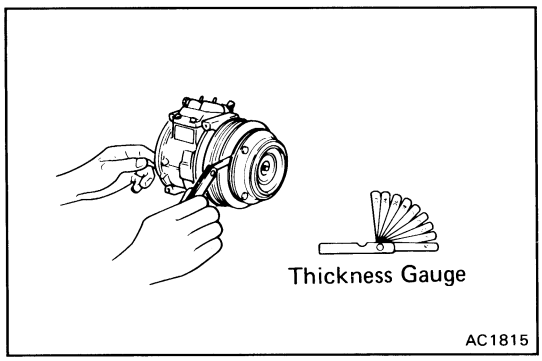

4. **CHECK CLEARANCE OF MAGNETIC CLUTCH**

Check the clearance between the pressure plate and rotor using thickness gauge.

Standard clearance: 0.5 ± 0.15 mm (0.020 ± 0.006 in.)

If the clearance is not within tolerance, change the number of shims to obtain the standard clearance.

INSTALLATION OF COMPRESSOR

(See page AC-23)

1. **INSTALL COMPRESSOR WITH FOUR MOUNTING BOLTS**

   Torque: 250 kg-cm (18 ft-lb, 25 N·m)

2. **INSTALL DRIVE BELT**

   (See steps 2 and 3 on page AC-20)

3. **CONNECT TWO HOSES TO COMPRESSOR SERVICE VALVES**

   Torque:

Discharge line	**250 kg-cm (18 ft-lb, 25 N·m)**
Suction line	**250 kg-cm (18 ft-lb, 25 N·m)**

4. **CONNECT CLUTCH LEAD WIRE TO WIRING HARNESS**

5. **PLACE BATTERY**

6. **CONNECT NEGATIVE CABLE TO BATTERY**

7. **EVACUATE AIR FROM AIR CONDITIONING SYSTEM**

8. **CHARGE AIR CONDITIONING SYSTEM WITH REFRIGERANT AND CHECK FOR GAS LEAKAGE**

   Specified amount: 650 — 750 g (1.4 — 1.7 lb)

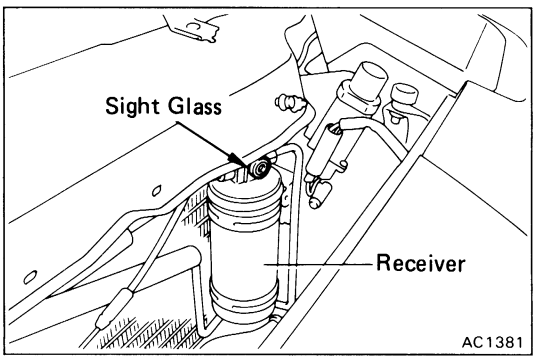

RECEIVER

(See page AC-8)

ON-VEHICLE INSPECTION

CHECK SIGHT GLASS, FUSIBLE PLUG AND FITTINGS FOR LEAKAGE

Use a gas leak detector. Repair as necessary.

REMOVAL OF RECEIVER

1. **DISCHARGE REFRIGERATION SYSTEM**
2. **DISCONNECT TWO LIQUID TUBES FROM RECEIVER**

   HINT: Cap the open fittings immediately to keep moisture out of the system.
3. **REMOVE RECEIVER FROM RECEIVER HOLDER**

INSTALLATION OF RECEIVER

1. **INSTALL RECEIVER IN RECEIVER HOLDER**

   HINT: Do not remove the blind plugs until ready for connection.
2. **CONNECT TWO LIQUID TUBES TO RECEIVER**

   Torque: 55 kg-cm (4 ft-lb, 5 N·m)
3. **IF RECEIVER WAS REPLACED, ADD COMPRESSOR OIL TO COMPRESSOR**

   Add 20 cc (0.7 fl.oz.)

   Compressor oil: DENSOOIL 6, SUNISO No.5GS or equivalent
4. **EVACUATE AIR FROM AIR CONDITIONING SYSTEM**
5. **CHARGE AIR CONDITIONING SYSTEM WITH REFRIGERANT AND CHECK FOR GAS LEAKAGE**

   Specified amount: 650 — 750 g (1.4 — 1.7 lb)

CONDENSER

(See page AC-8)

ON-VEHICLE INSPECTION

1. **CHECK CONDENSER FINS FOR BLOCKAGE OR DAMAGE**

   If the fins are clogged, wash them with water and dry with compressed air.

   NOTICE: Be careful not to damage the fins.

   If the fins are bent, straighten them with a screwdriver or pliers.
2. **CHECK CONDENSER FITTINGS FOR LEAKAGE**

   Repair as necessary.

REMOVAL OF CONDENSER

1. **DISCHARGE REFRIGERATION SYSTEM**

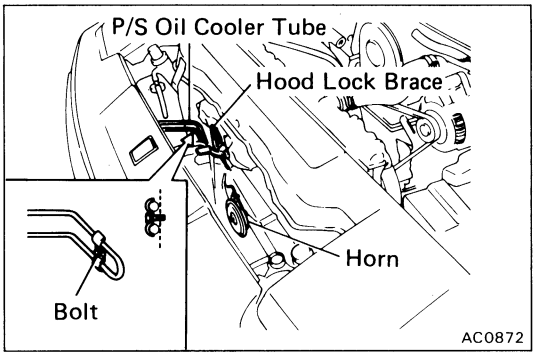

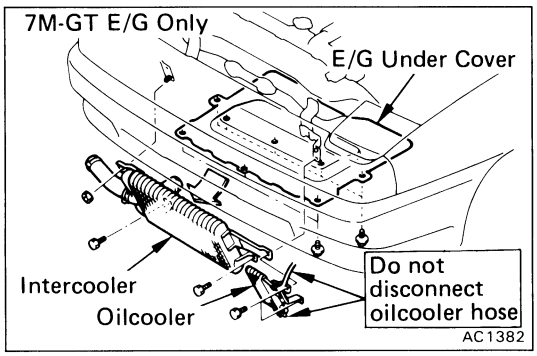

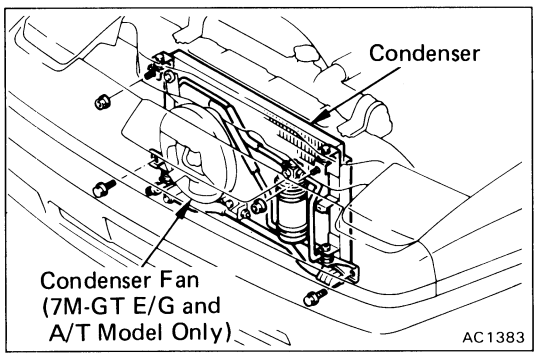

2. **REMOVE FOLLOWING COMPONENTS:**
   (a) Hood lock brace
   (b) Center brace with horn
   (c) Washer tank with bracket
   (d) Engine under cover (7M-GTE E/G only)
   (e) Intercooler (7M-GTE E/G only)
   (f) Oilcooler (7M-GTE E/G only)
   (g) Condenser fan (7M-GTE E/G and A/T model only)

3. **DISCONNECT DISCHARGE HOSE AND SUCTION HOSE**

4. **DISCONNECT LIQUID TUBE AND SUCTION TUBE**

   HINT: Cap the open fittings immediately to keep moisture out of the system.

5. **REMOVE CONDENSER**

   Remove two nuts and two bolts.

INSTALLATION OF CONDENSER

1. **INSTALL CONDENSER**
   (See page AC-8)

2. **CONNECT DISCHARGE HOSE AND SUCTION HOSE**

   Torque:

Discharge hose	**250 kg-cm (18 ft-lb, 25 N·m)**
Suction hose	**325 kg-cm (24 ft-lb, 32 N·m)**

3. **CONNECT LIQUID TUBE AND SUCTION TUBE**

   Torque:

Liquid tube	**135 kg-cm (10 ft-lb, 13 N·m)**
Suction tube	**325 kg-cm (24 ft-lb, 32 N·m)**

4. **INSTALL FOLLOWING COMPONENTS:**
   (a) Hood lock brace
   (b) Center brace with horn
   (c) Washer tank with bracket
   (d) Engine under cover (7M-GTE E/G only)
   (e) Intercooler (7M-GTE E/G only)
   (f) Oilcoolr (7M-GTE E/G only)
   (g) Condenser fan (7M-GTE E/G and A/T model only)

5. **IF CONDENSER WAS REPLACED, ADD COMPRESSOR OIL TO COMPRESSOR**

   Add 40 — 50 cc (1.4 — 1.7 fl.oz.)

   Compressor oil: DENSOOIL 6, SUNISO No.5GS or equivalent

6. **EVACUATE AIR FROM AIR CONDITIONING SYSTEM**

7. **CHARGE AIR CONDITIONING SYSTEM WITH REFRIGERANT AND CHECK FOR GAS LEAKAGE**

   Specified amount: 650 — 750 g (1.4 — 1.7 lb)

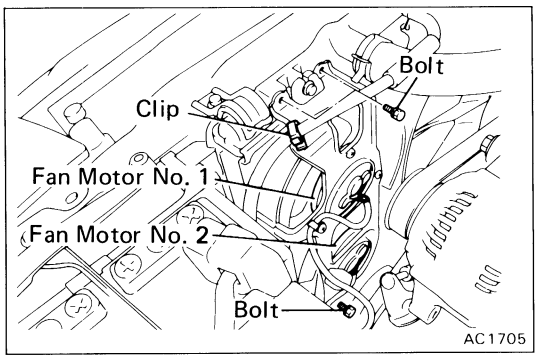

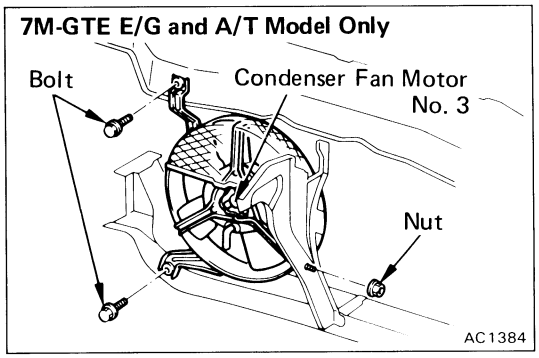

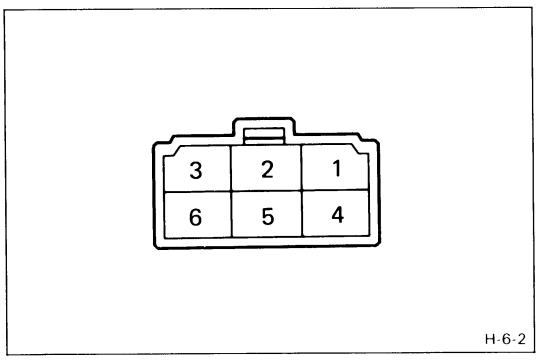

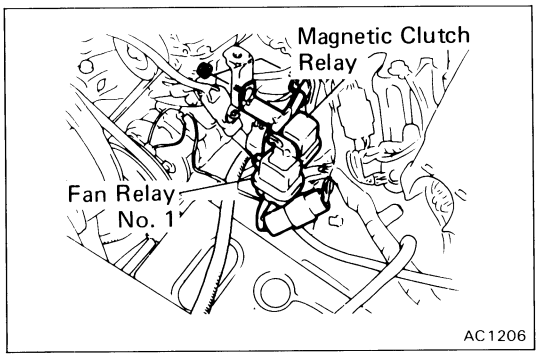

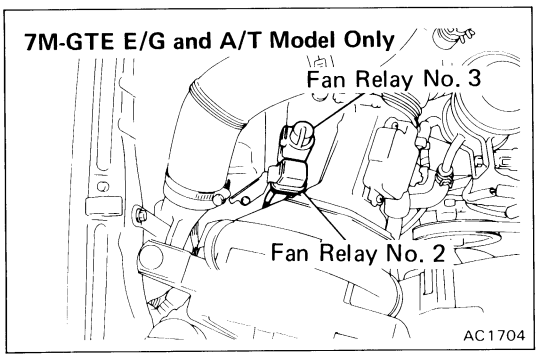

CONDENSER FAN MOTORS

INSPECTION OF CONDENSER FAN MOTORS

1. **DISCONNECT NEGATIVE CABLE FROM BATTERY**
2. **DISCONNECT CONNECTOR OF FAN MOTOR**
3. **CHECK FAN MOTOR**
   (a) Using the wire harness, apply battery voltage (12V) to the connector.
   (b) Confirm smooth rotation of the motor within the specified current flow.

   Standard current:
   Fan motor No.1 and No.2
   8.0 ± 0.8 A (7M-GTE E/G and M/T model)
   6.7 ± 0.7 A (7M-GTE E/G and A/T model or 7M-GE E/G model)

   Fan motor No.3
   6.7 ± 0.7 A (7M-GTE E/G and A/T model only)

   If defective, replace the motor.
4. **CONNECT CONNECTOR OF FAN MOTOR**
5. **CONNECT NEGATIVE CABLE TO BATTERY**

HEATER BLOWER RESISTOR

INSPECTION OF RESISTOR

INSPECT RESISTOR RESISTANCE

Check that there is continuity between terminals 4 and 6.

If there is no continuity, replace the resistor.

RELAYS

INSPECTION OF RELAYS

1. **REMOVE RELAYS**

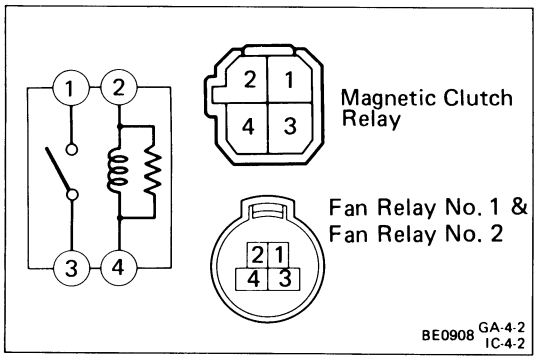

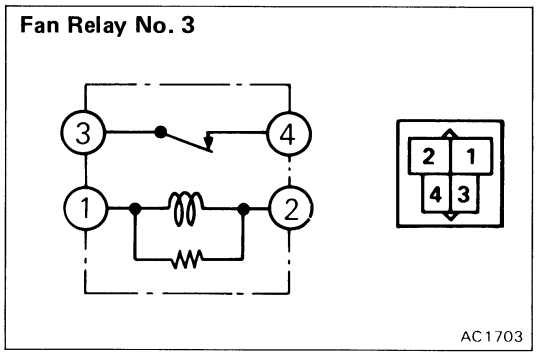

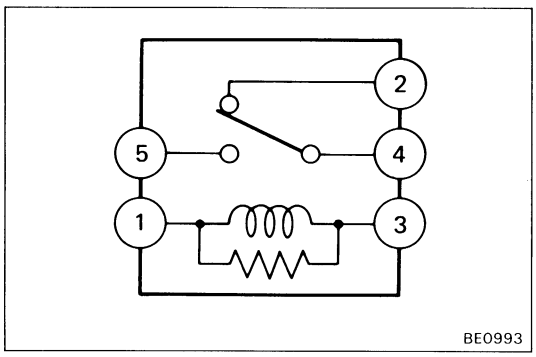

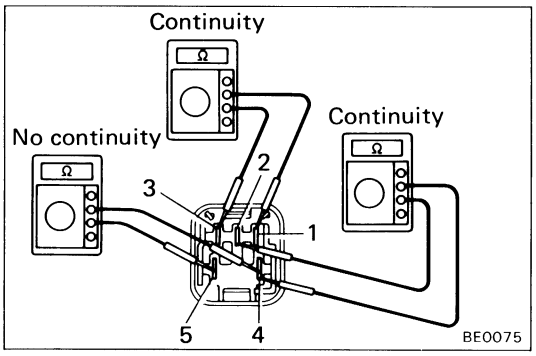

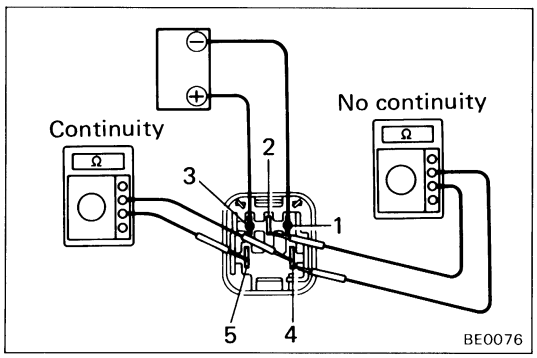

2. INSPECT RELAY CONTINUITY

(Magnetic Clutch Relay)

(Fan Relay No.1)

(Fan Relay No.2 ; 7M-GTE E/G and A/T Model)

O—O : Continuity

Terminals / Condition	1	2	3	4
Constant		O—	—ꝏ—	—O
Apply battery voltage to terminal 2 and 4	O—	—	—O	

(Fan Relay No.3 ; 7M-GTE E/G and A/T Model)

Terminals / Condition	1	2	3	4
Constant	O—ꝏ—	—O	O—	—O
Apply battery voltage to terminal 1 and 2			No continuity	

If continuity is not as specified, replace the relay.

(Heater Relay)

(a) Check that there is continuity between terminals 1 and 3.

(b) Check that there is continuity between terminals 2 and 4.

(c) Check that there is no continuity between terminals 4 and 5.

If continuity is not as specified, replace the relay.

3. INSPECT RELAY OPERATION

(Heater Relay)

(a) Apply battery voltage to terminals 1 and 3.

(b) Check that there is continuity between terminals 4 and 5.

(c) Check that there is no continuity between terminals 2 and 4.

If operation is not as specified, replace the relay.

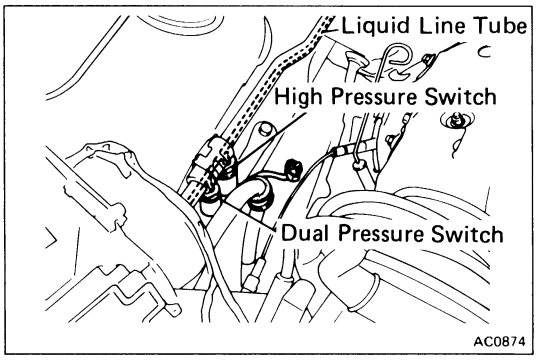

PRESSURE SWITCH

(See page AC-8)

ON-VEHICLE INSPECTION

1. **DISCONNECT CONNECTOR OF PRESSURE SWITCH**
2. **INSPECT PRESSURE SWITCH**
   (a) Install the manifold gauge set. (See page AC-21)
   (b) Observe the gauge reading.
   (c) Check the continuity between two terminals of the pressure switch shown in the below.

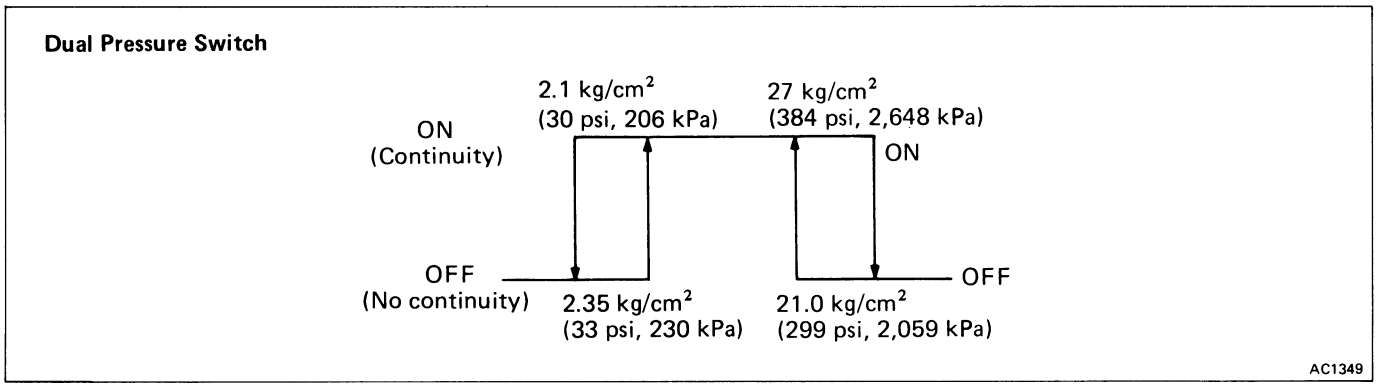

If defective, replace the pressure switch.

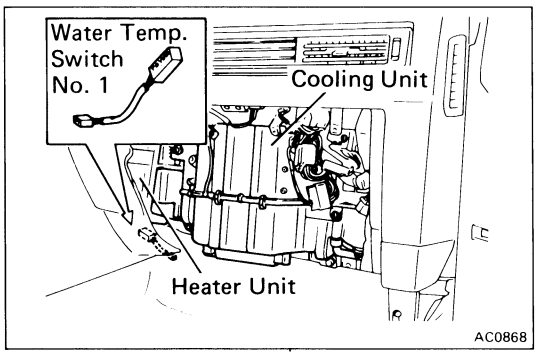

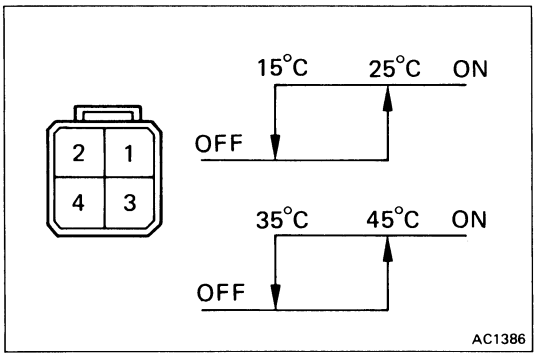

WATER TEMPERATURE SWITCH

HINT: The water temperature switch is under the heater radiator.

INSPECTION OF WATER TEMPERATURE SWITCH NO. 1

INSPECT SWITCH CONTINUITY

Water Temp. \ Terminals	1	2	3	4
15°C (59°F) or below	No continuity			
25°C (77°F) or more	○			○
45°C (113°F) or more	○	○	○	○

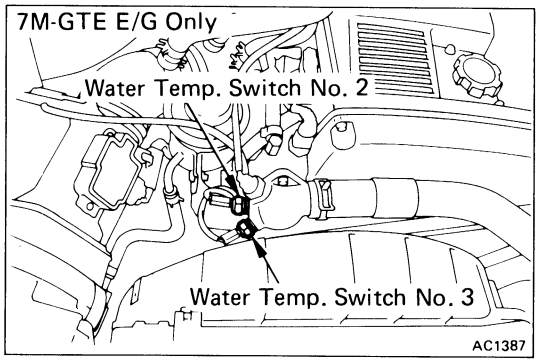

INSPECTION OF WATER TEMPERATURE SWITCH NO.2, NO.3 (7M-GTE E/G MODEL ONLY)

INSPECT SWITCH CONTINUITY

Inspect the switch continuity between each terminal at each water temperature.

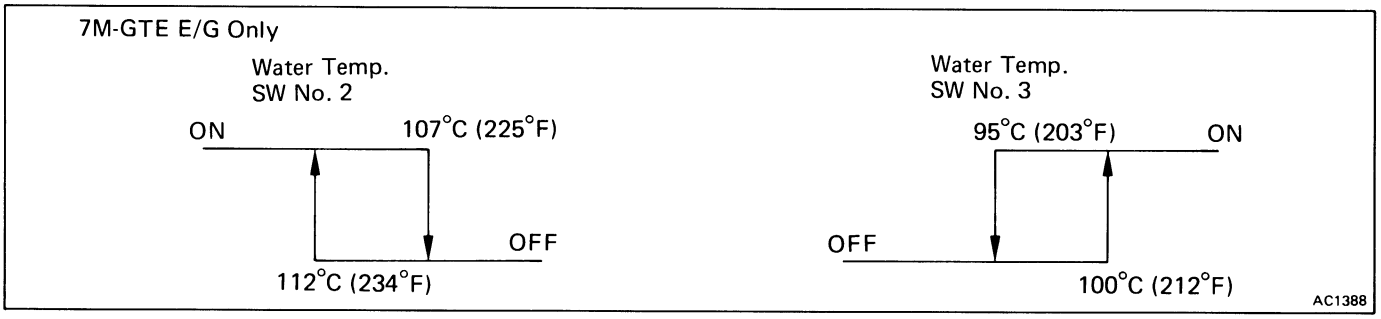

If defective, replace the switch.

COOLING UNIT

(See page AC-8)

ON-VEHICLE INSPECTION OF EXPANSION VALVE

1. **CHECK QUANTITY OF REFRIGERANT GAS DURING REFRIGERATION CYCLE**

2. **INSTALL MANIFOLD GAUGE SET**
   (See page AC-21)

3. **RUN ENGINE**

   Run the engine at 2,000 rpm for at least 5 minutes.

4. **CHECK EXPANSION VALVE**

   If the expansion valve is clogged, the low pressure reading will drop to 0 kg/cm² (0 psi, 0 kPa), otherwise it is OK.

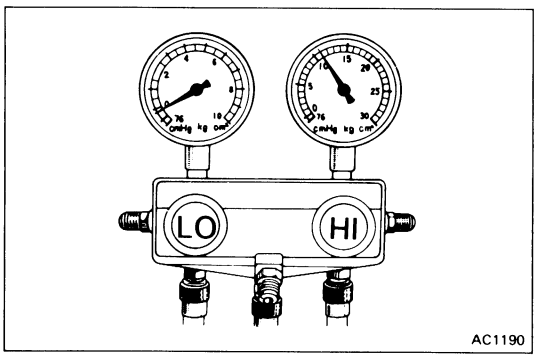

REMOVAL OF COOLING UNIT

1. **DISCONNECT NEGATIVE CABLE FROM BATTERY**

2. **DISCHARGE REFRIGERATION SYSTEM**

3. **REMOVE CHARCOAL CANISTER WITH BRACKET**

4. **DISCONNECT SUCTION TUBE FROM COOLING UNIT OUTLET FITTING**

5. **DISCONNECT LIQUID TUBE FROM COOLING UNIT INLET FITTING**

   HINT: Cap the open fittings immediately to keep moisture out of the system.

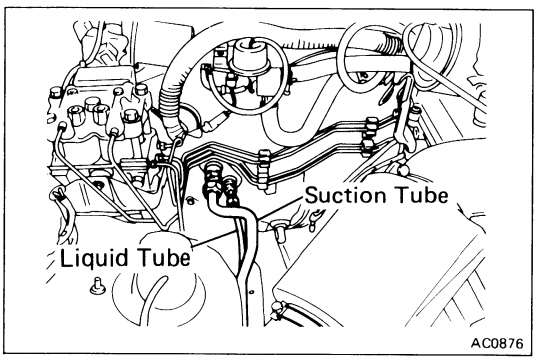

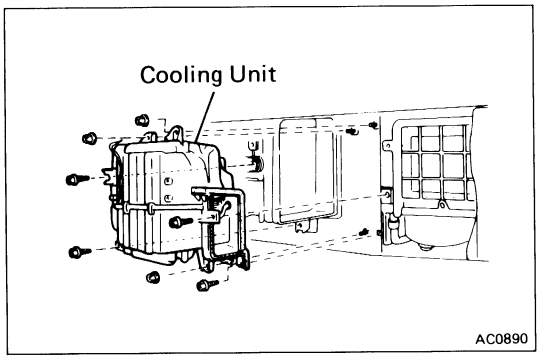

6. **REMOVE GROMMETS FROM INLET AND OUTLET FITTINGS**

7. **REMOVE GLOVE BOX AND UNDER COVER**

8. **REMOVE GLOVE BOX COVER AND REINFORCEMENT**

9. **REMOVE EFI AND A.B.S. COMPUTER**

10. **DISCONNECT CONNECTOR**

11. **REMOVE COOLING UNIT**
    Remove four screws and three nuts.

DISASSEMBLY OF COOLING UNIT

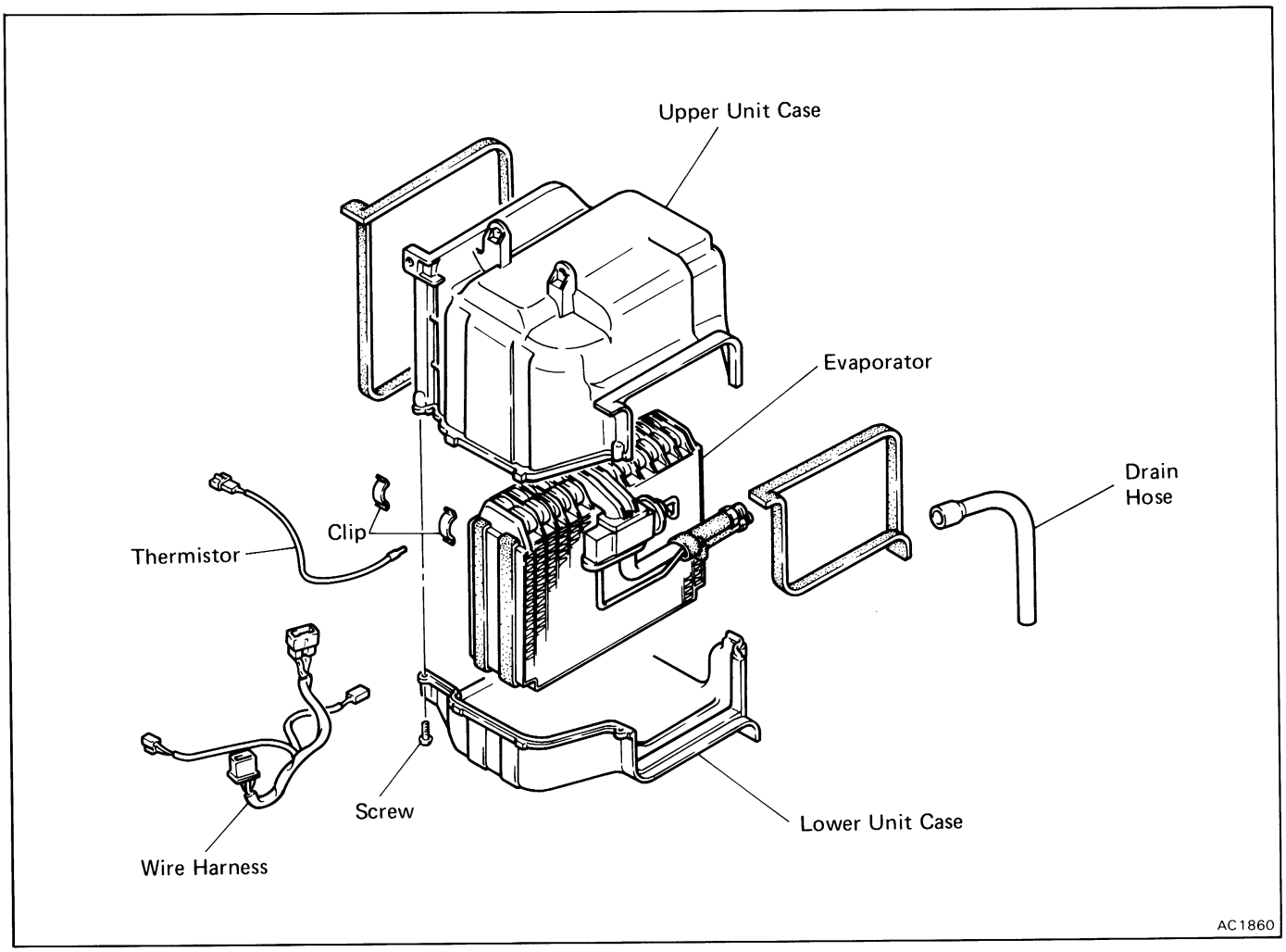

1. **REMOVE LOWER AND UPPER CASE**
   (a) Remove connector of thermistor from unit case.
   (b) Remove three clips.
   (c) Remove four screws.
   (d) Remove upper unit case.
   (e) Remove thermistor with thermistor holder.
   (f) Remove lower unit case.

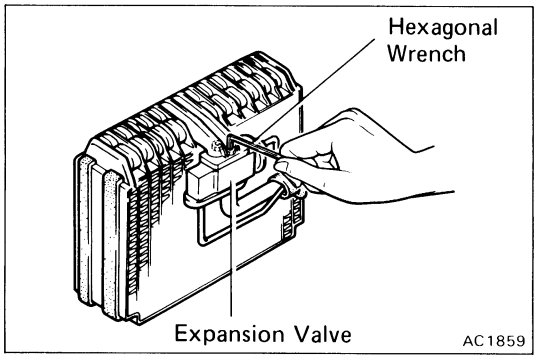

2. **REMOVE EXPANSION VALVE**
   (a) Remove the packing and heat sensing tube from suction and liquid tubes.
   (b) Remove the expansion valve from the evaporator.

Evaporator

INSPECTION OF EVAPORATOR

1. **CHECK EVAPORATOR FINS FOR BLOCKAGE**
   If the fins are clogged, clean them with compressed air.
   NOTICE: Never use water to clean the evaporator.
2. **CHECK FITTINGS FOR CRACKS OR SCRATCHES**
   Repair as necessary.

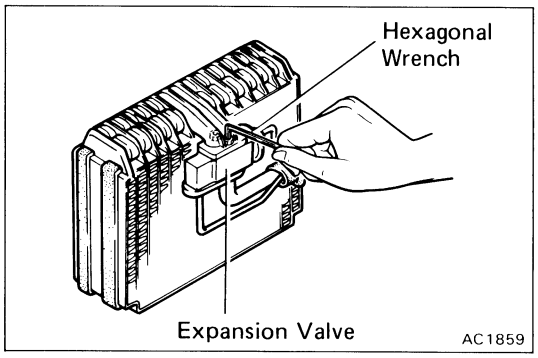

ASSEMBLY OF COOLING UNIT

INSTALL COMPONENTS ON EVAPORATOR

(a) Connect the expansion valve, suction and liquid tubes to the evaporator. Torque the bolt.

Torque: 55 kg-cm (47.7 in.-lb, 5.4 N·m)

HINT: Be sure that the O-rings are positioned on the tube fitting.

(b) Install the holder to the suction and liquid tubes with heat sensing tube.
(c) Install the lower unit case to the evaporator.
(d) Install the thermistor to the evaporator.
(e) Install the upper unit case.
(f) Install the four screws.
(g) Install three clips.
(h) Install the connector of thermistor.

INSTALLATION OF COOLING UNIT

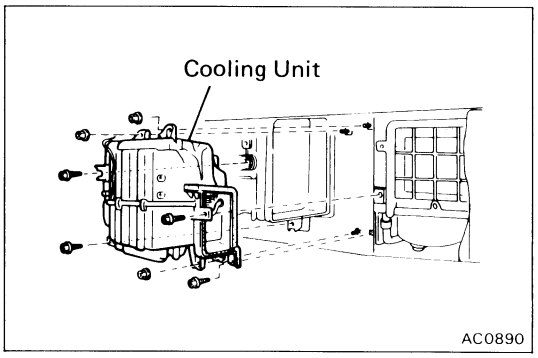

1. **INSTALL COOLING UNIT**
   Install the cooling unit with four screws and three nuts.
2. **CONNECT CONNECTOR OF THERMISTOR**
3. **INSTALL EFI AND A.B.S. COMPUTER**
4. **INSTALL GLOVE BOX COVER AND REINFORCEMENT**
5. **INSTALL GLOVE BOX AND UNDER COVER**
6. **INSTALL GROMMETS ON INLET AND OUTLET FITTINGS**

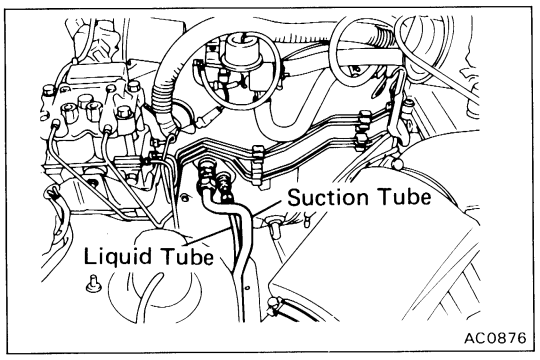

7. **CONNECT LIQUID TUBE TO COOLING UNIT INLET FITTING**

   Torque the nut.

   Torque: 135 kg-cm (10 ft-lb, 13 N·m)

8. **CONNECT SUCTION TUBE TO COOLING UNIT OUTLET FITTING**

   Torque the nut.

   Torque: 325 kg-cm (24 ft-lb, 32 N·m)

9. **IF EVAPORATOR WAS REPLACED, ADD COMPRESSOR OIL TO COMPRESSOR**

   Add 40 — 50 cc (1.4 — 1.7 fl.oz.)

   Compressor oil: DENSOOIL 6, SUNISO No.5GS or equivalent

10. **INSTALL CHARCOAL CANISTER WITH BRACKET**

11. **CONNECT NEGATIVE CABLE TO BATTERY**

12. **EVACUATE AIR FROM AIR CONDITIONING SYSTEM**

13. **CHARGE AIR CONDITIONING SYSTEM WITH REFRIGERANT AND CHECK FOR GAS LEAKAGE**

    Specified amount: 650 — 750 g (1.4 — 1.7 lb)

REFRIGERANT LINES

(See page AC-8)

ON-VEHICLE INSPECTION

1. **INSPECT HOSES AND TUBES FOR LEAKAGE**

   Use a gas leak detector. Replace, if necessary.

2. **CHECK THAT HOSE AND TUBE CLAMPS ARE NOT LOOSE**

   Tighten or replace as necessary.

REPLACEMENT OF REFRIGERANT LINES

1. **DISCHARGE REFRIGERATION SYSTEM**

2. **REPLACE FAULTY TUBE OR HOSE**

   HINT: Cap the open fitting immediately to keep moisture out of the system.

3. **TIGHTENING TORQUE FOR O-RING AND BOLTED TYPE FITTINGS**
   (See page AC-8)

4. **EVACUATE AIR FROM AIR CONDITIONING SYSTEM**

5. **CHARGE AIR CONDITIONING SYSTEM WITH REFRIGERANT AND CHECK FOR GAS LEAKAGE**

   Specified amount: 650 — 750 g (1.4 — 1.7 lb)

THERMISTOR

REMOVAL AND INSPECTION OF THERMISTOR

1. **DISCONNECT NEGATIVE CABLE FROM BATTERY**

2. **REMOVE GLOVE BOX AND UNDER COVER**

3. **CHECK THERMISTOR INSTALLED OPERATION**

   Using an ohmmeter, measure the resistance at the connector.

   Resistance: 1,500 Ω at 25°C (77°F)

   If resistance value is not as specified, replace the thermistor.

4. **REMOVE THERMISTOR**

   (a) Disconnect the connector.

   (b) Remove the screw and thermistor from the cooling unit.

5. **CHECK THERMISTOR OPERATION**

   (a) Place the thermistor in cold water. While varying the temperature of the water, measure the resistance at the connector and, at the same time, measure the temperature of the water with a thermometer.

   (b) Compare the two readings on the chart.

   If the intersection is not between the two lines, replace the thermistor.

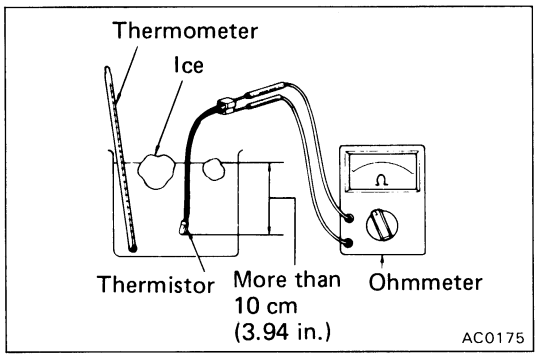

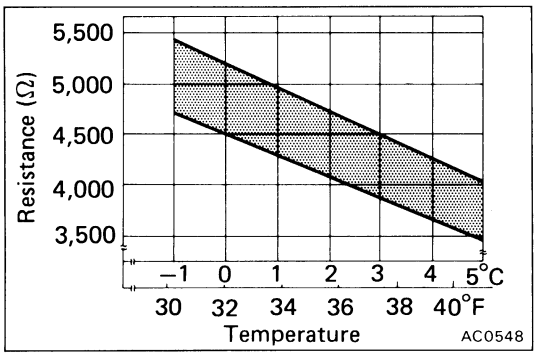

A/C CONTROL PANEL ASSEMBLY

INSPECTION OF A/C CONTROL PANEL ASSEMBLY

1. REMOVE A/C CONTROL PANEL ASSEMBLY

2. MEASURE OUTPUT VOLTAGE

(a) Connect the positive (+) lead from the battery to terminals 1, 2 and the negative (−) lead to terminal 10.

(b) Connect the negative (−) lead from the voltage meter to terminal 10 and the positive (+) lead to each terminal Ⓐ with the resistance.

(c) Check that the output voltage is as shown in the chart below.

HINT: Confirm that each indicator lights are lit with button pushed in.

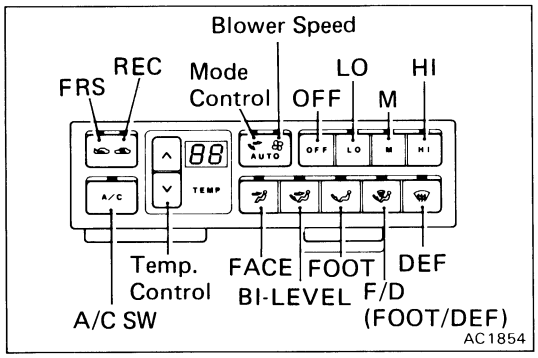

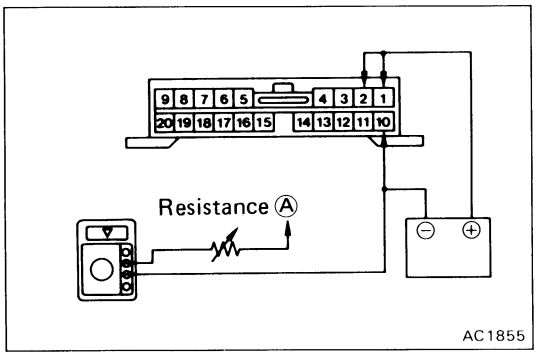

Control Button				Resistance (Ω)	Terminal Ⓐ	Voltage (V)
A/C	FRS/REC	Mode Control	Blower Speed			
OFF	FRS	AUTO	AUTO	620	14	12 or more
					15	1.5 or less
					17	12 or more
					18	1.0 or less
					8	12 or more
					7	1 or less
					19	12 or more
					16	
					6	
				70	12	1.5 or less
					3	1 or less
					13	12 or more
					4	12 or more
ON				620	14	1 or less
					17	1.5 or less
					15	12 or more
			OFF	70	12	
					3	
			LO		12	1 or less
			M		13	
			HI		4	
					13	12 or more
	REC	DEF		620	6	1 or less
					18	12 or more
					7	
		F/D			16	1 or less
					6	12 or more
		FOOT			19	1 or less
					16	12 or more
		BI-LEVEL			7	1 or less
					19	12 or more
		FACE			8	1 or less
					7	12 or more
		AUTO	AUTO		18	1 or less
					7	1 or less

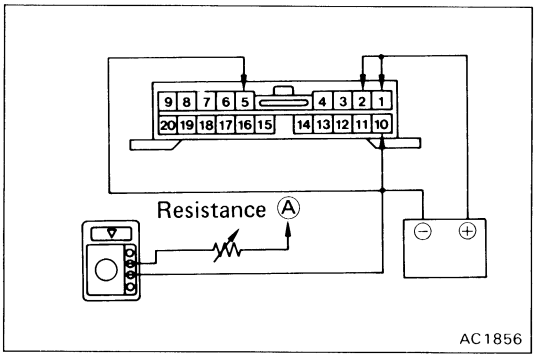

Control Button				Resistance	Terminal	Voltage
A/C	FRS/REC	Mode Control	Blower Speed	(Ω)	Ⓐ	(V)
ON	REC	AUTO	AUTO	620	8	1 or less
					7	12 or more
OFF					19	1 or less
					8	12 or more

If the voltage is not as specified, replace the A/C control panel assembly.

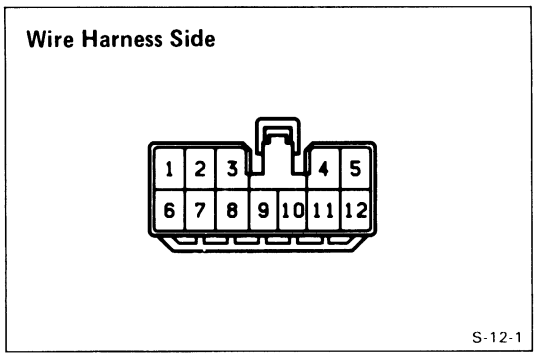

AMPLIFIERS

INSPECTION OF AMPLIFIER

INSPECT AMPLIFIER CIRCUIT

Disconnect the amplifier and inspect the connector on the wire harness side as shown in the chart below.

Test conditions:
(1) Ignition switch: ON
(2) Temperature control lever: MAX COOL
(3) Blower switch: HI

Check for	Tester connection	Condition	Specified value
Continuity	10 – Ground	Constant	Continuity
Voltage	2 – 10	Turn A/C switch on.	Battery voltage
		Turn A/C switch off.	No voltage
Resistance	6 – 9	Constant	Approx. 1.5 kΩ at 25°C (77°F)

INSPECTION OF SYSTEM AMPLIFIER (In A/C Control Panel Assembly)

1. False Signal Input to System Amplifier.

False Signal	A	B
Condition	Interior room temperature is very low. 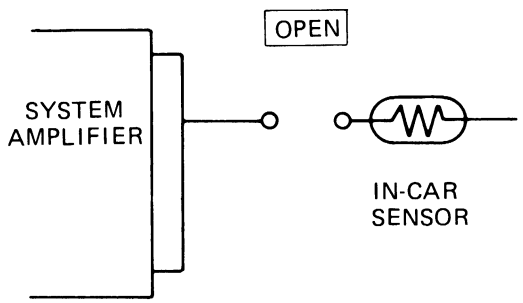	Interior room temperature is very high. 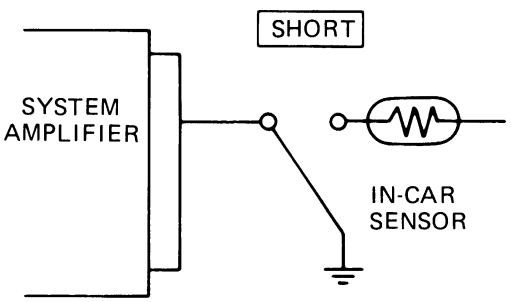
Your Work	Remove in-car sensor connector	Remove in-car sensor and ground the number 1 pin of in-car sensor female connector

2. System Operation When Input False Signal

Condition: Setting Temperature is at 25°C (77°F)

System Main Parts	False Signal	Motion			
Air Mix Control Servo Motor	A	Air mix control servo motor shaft moves towards max. hot side.			
	B	Air mix control servo motor shaft moves towards max. cool side.			
Air Vent Mode Control Servo Motor		Air Vent Mode Damper			
		VENT	BI-LEVEL	HEAT	DEF
	A	Close	Close	Open	Close
	B	Open	Close	Close	Close
Blower Motor	A	Blower motor rotates at high speed.			
	B				
Water Valve	A	OPEN			
	B	CLOSE			
FRE/REC Control Servo Motor	FRE Switch ON	Fresh air is ventilated.			
	REC Switch ON	Recirculation air is ventilated.			

If necessary, replace the system amplifier.

SENSORS

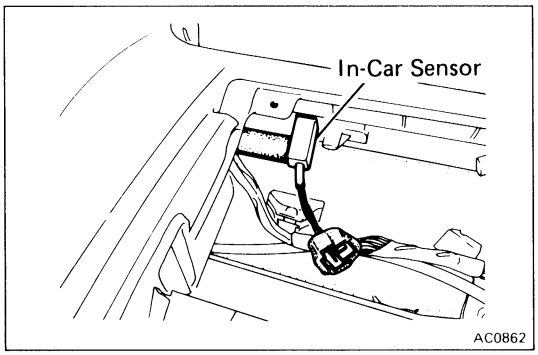

1. IN-CAR SENSOR

Check the sensor resistance.

HINT: If there is an open circuit in the sensor, the system will operate at maximum heating.

Conversely, if there is a short in the system, it will operate at maximum cooling.

If resistance is not as specified, replace the sensor.

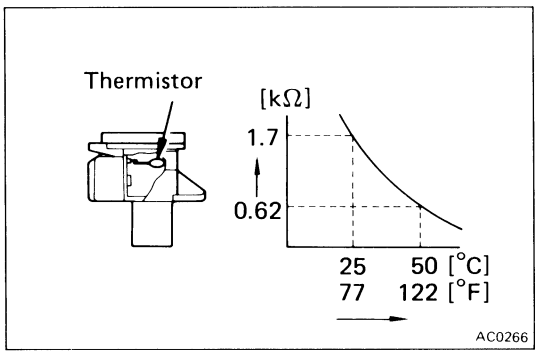

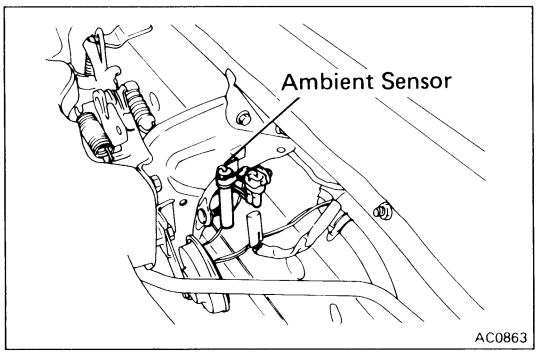

2. AMBIENT SENSOR

Check the sensor resistance.

If resistance is not as specified, replace the sensor.

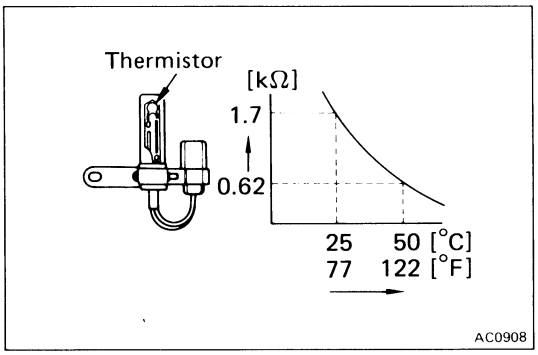

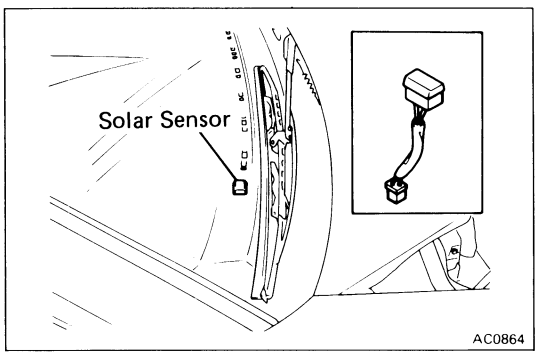

3. SOLAR SENSOR

Using an ohmmeter, check the continuity.

HINT: There is the solar sensor on the safety pad of the assistant side.

If there is no continuity, replace the sensor.

FUNCTIONAL TEST AND ADJUSTMENT

Automatic Temperature Control System

ON-VEHICLE INSPECTION

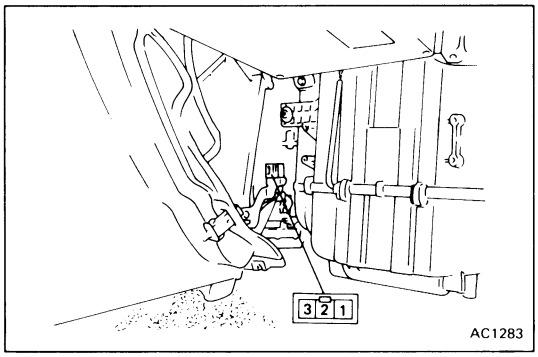

1. **DISCONNECT SHORT CIRCUIT CONNECTOR**
2. **MAKE SHORT TERMINALS 1 AND 3 FOR TEST**
3. **SET TEMPERATURE CONTROL AT 25°C (77°F)**
4. **RUN ENGINE AT IDLING**
5. **TURN ON BLOWER SWITCH TO AUTO POSITION**

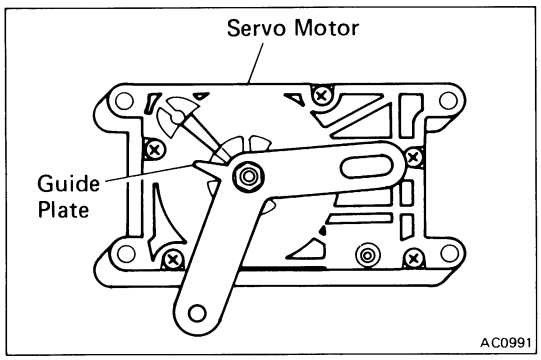

6. **CHECK AUTOMATIC TEMPERATURE CONTROL SYSTEM**
   (a) Verify that the guide plate on the servo motor is positioned at the mark ''O'' (between the ''R'' and ''W'').
   (b) If the guide plate position is not at the mark ''O'', adjust as follows.

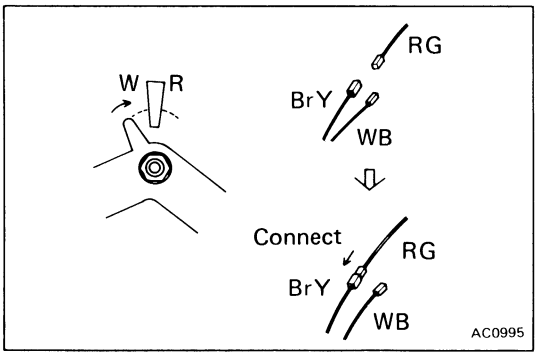

   (c) If the guide plate position is over the ''W'' area, connect the wire harness RG and BrY.

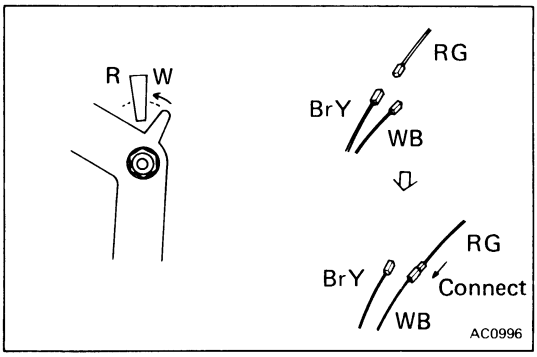

   (d) If the guide plate position is over the ''R'' area, connect the wire harness RG and WB.
7. **CONNECT SHORT CIRCUIT CONNECTOR**

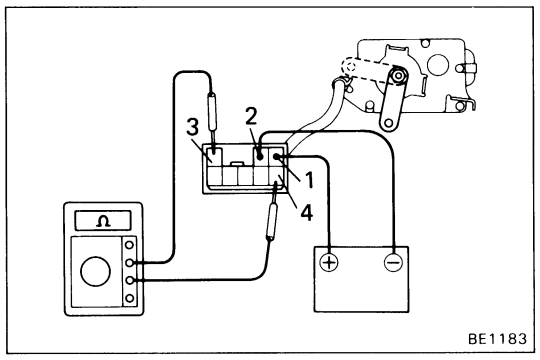

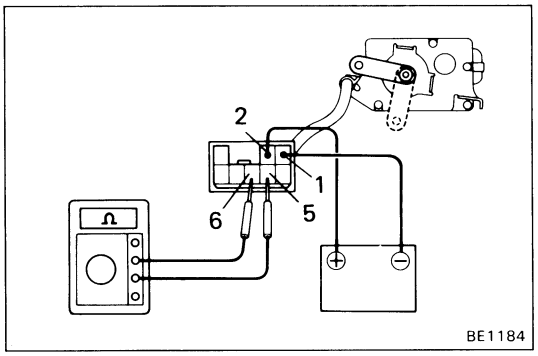

RECIRC/FRESH Control Servo Motor

INSPECTION OF RECIRC/FRESH CONTROL SERVO MOTOR

(Operation)

(a) Connect the positive (+) lead from the battery to terminal 1 and the negative (−) lead to terminal 2.

(b) Check that the arm rotates smoothly.

(c) At this time, check for continuity between terminals 3 and 4 as shown in the illustration.

(d) Connect the positive (+) lead from the battery to terminal 2 and the negative (−) lead to terminal 1.

(e) Check that the arm rotates smoothly.

(f) At this time, check for continuity between terminals 5 and 6 as shown in the illustration.

If operation is not as specified, replace the servo motor.

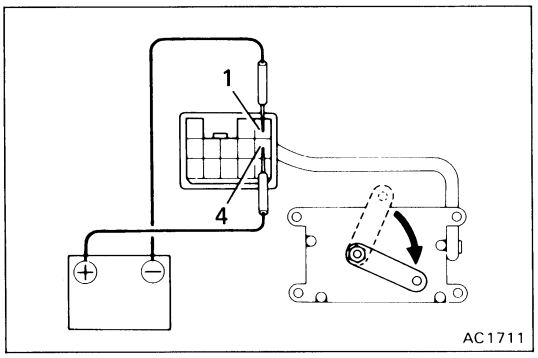

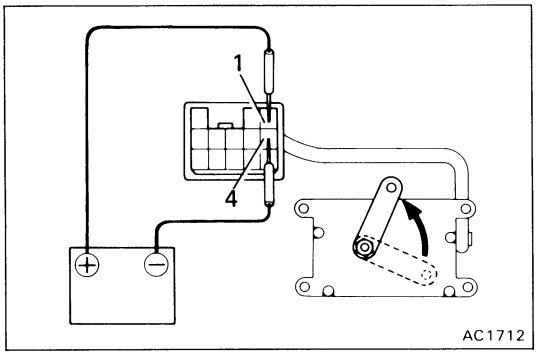

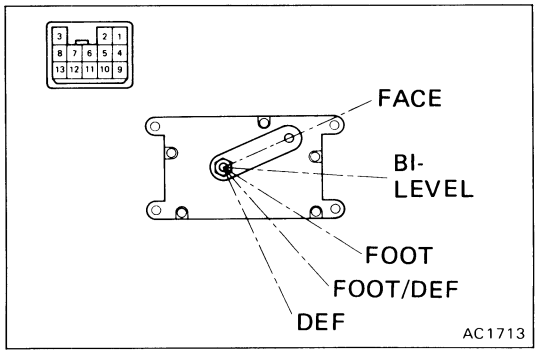

Air Vent Mode Control Servo Motor

INSPECTION OF AIR VENT MODE CONTROL SERVO MOTOR

(Operation)

(a) Connect the positive (+) lead from the battery to terminal 1 and the negative (−) lead to terminal 4.

(b) Check that the arm rotates smoothly.

(c) Connect the positive (+) lead from the battery to terminal 4 and the negative (−) lead to terminal 1.

(d) Check that the arm rotates smoothly.

(Continuity)

Check for continuity between terminal as shown below.

Arm position \ Terminals	2	5	6	7	9	10	11
FACE	○	○	○		○	○	
BI-LEVEL	○	○		○	○	○	○
FOOT	○	○	○	○	○		○
FOOT-DEF		○	○	○	○	○	○
DEF	○		○	○		○	○

If operation or continuity is not as specified, replace the servo motor.

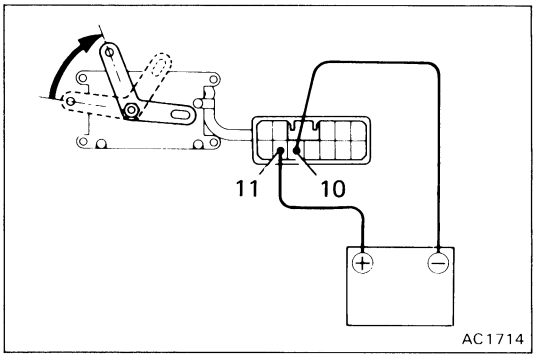

Air Mix Control Servo Motor

INSPECTION OF AIR MIX CONTROL SERVO MOTOR

(Operation)

(a) Connect the positive (+) lead from the battery to terminal 10 and the negative (−) lead to terminal 11.

(b) Check that the lever moves smoothly from WARM to COOL.

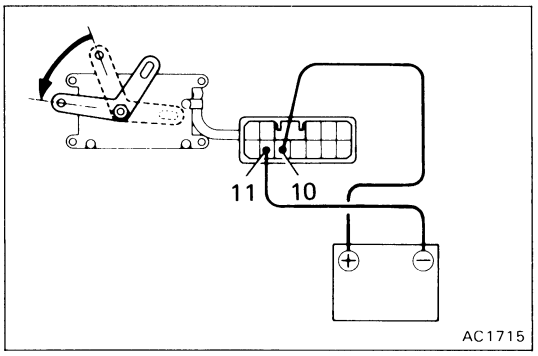

(c) Connect the positive (+) lead from the battery to terminal 11 and the negative (−) lead to terminal 10.

(d) Check that the lever moves smoothly from COOL to WARM.

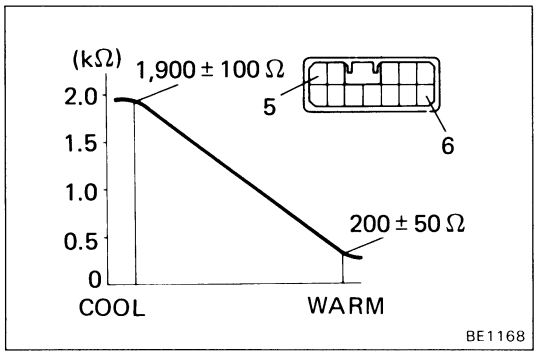

(Resistance)

While operating the servo motor from either points (a) or (b), measure the resistance values of terminals 5 and 6.

Position	Resistance (Ω)
COOL	1,900 ± 100
WARM	200 ± 50

The resistance values from COOL to WARM will successively decrease.

If operation or resistance is not as specified, replace the servo motor.

SERVICE SPECIFICATIONS

	Page
MAINTENANCE	A-2
ENGINE MECHANICAL	A-3
TURBOCHARGER SYSTEM	A-7
EFI SYSTEM	A-8
COOLING SYSTEM	A-13
LUBRICATION SYSTEM	A-13
IGNITION SYSTEM	A-14
STARTING SYSTEM	A-14
CHARGING SYSTEM	A-15
CLUTCH	A-15
MANUAL TRANSMISSION (W58)	A-16
MANUAL TRANSMISSION (R154)	A-19
AUTOMATIC TRANSMISSION (A340E)	A-21
PROPELLER SHAFT	A-25
FRONT AXLE AND SUSPENSION	A-26
REAR AXLE AND SUSPENSION	A-27
BRAKE SYSTEM	A-30
STEERING	A-31
SRS AIRBAG	A-33
BODY	A-34
LUBRICANT	A-35

MAINTENANCE

Engine

Drive belt tension					
w/ Borroughs drive belt tension gauge No. BT-33-73F or Nippondenso BTG-20 (95506-00020)					
Alternator	New belt		175 ± 5 lb		
	Used belt		115 ± 20 lb		
PS pump	New belt		160 ± 20 lb		
	Used belt		100 ± 20 lb		
A/C compressor	New belt		160 ± 20 lb		
	Used belt		105 ± 10 lb		
Coolant capacity	7M-GE	M/T	8.1 liters	8.6 US qts	7.1 Imp. qts
		A/T	8.0 liters	8.5 US qts	7.0 Imp. qts
	7M-GTE	M/T	8.2 liters	8.7 US qts	7.2 Imp. qts
		A/T	8.1 liters	8.5 US qts	7.1 Imp. qts
Engine oil capacity	Drain and refill				
	w/ Oil filter change		4.4 liters	4.7 US qts	3.9 Imp. qts
	w/o Oil filter change		4.1 liters	4.3 US qts	3.6 Imp. qts
Spark plug					
Type	7M-GE	ND	PQ16R		
		NGK	BCPR5EP11		
	7M-GTE	ND	PQ20R-P8		
		NGK	BCPR6EP-N8		
Gap		7M-GE	1.1 mm	0.043 in.	
		7M-GTE	0.8 mm	0.031 in.	
Firing order			1–5–3–6–2–4		
Valve clearance (cold)		Intake	0.15 – 0.25 mm	0.006 – 0.010 in.	
		Exhaust	0.20 – 0.30 mm	0.008 – 0.012 in.	

Chassis

Front and rear brake					
Pad thickness		Limit	1.0 mm	0.039 in.	
Disc thickness	Front	Limit	21.0 mm	0.827 in.	
	Rear	Limit	17.0 mm	0.669 in.	
Disc runout		Limit	0.13 mm	0.005 in.	
Parking brake					
Lining thickness		Limit	1.0 mm	0.039 in.	
Drum inner diameter		Limit	191.0 mm	7.52 in.	
Front axle and suspension					
Ball joint vertical play	Upper	Limit	0 mm	0 in.	
	Lower	Limit	0.3 mm	0.012 in.	
Steering wheel freeplay			30 mm (1.18 in.) or less		
Torque specifications					
Front seat mounting bolt			375 kg-cm	27 ft-lb	37 N·m
Front suspension member x Body			1,300 kg-cm	94 ft-lb	127 N·m
Rear suspension member x Body (Front & Rear)			1,840 kg-cm	133 ft-lb	180 N·m

ENGINE MECHANICAL

Specifications

Idle speed			7M-GE	700 rpm		
			7M-GTE	650 rpm		
Intake manifold vacuum				400 mmHg (15.75 in.Hg, 53.3 kPa) or more		
Compression pressure	at 250 rpm	STD	7M-GE	11.0 kg/cm^2	156 psi	1,079 kPa
			7M-GTE	10.0 kg/cm^2	142 psi	981 kPa
		Limit		9.0 kg/cm^2	128 psi	883 kPa
Differential of pressure between each cylinder				1.0 kg/cm^2 (14 psi, 98 kPa) or less		

Cylinder head	Warpage	Cylinder block side	Limit	0.10 mm	0.0039 in.
		Intake manifold side	Limit	0.10 mm	0.0039 in.
		Exhaust manifold side	Limit	0.10 mm	0.0039 in.
	Valve guide bore		STD	11.000 – 11.027 mm	0.4331 – 0.4341 in.
			O/S 0.05	11.050 – 11.077 mm	0.4350 – 0.4361 in.
	Valve seat	Refacing angle		30°, 45°, 60°	
		Contacting angle		45°	
		Contacting width		1.0 – 1.4 mm	0.039 – 0.055 in.
Valve guide bushing	Inside diameter			6.010 – 6.030 mm	0.2366 – 0.2374 in.
	Outside diameter		STD	11.033 – 11.044 mm	0.4344 – 0.4348 in.
			O/S 0.05	11.083 – 11.094 mm	0.4363 – 0.4368 in.
	Replacing temperature (Cylinder head side)			90°C	194°F
Valve	Valve overall length	STD		98.15 mm	3.8642 in.
		Limit		97.75 mm	3.8484 in.
	Valve face angle			44.5°	
	Stem diameter		Intake	5.970 – 5.985 mm	0.2350 – 0.2356 in.
			Exhaust	5.965 – 5.980 mm	0.2348 – 0.2354 in.
	Stem oil clearance	STD	Intake	0.025 – 0.060 mm	0.0010 – 0.0024 in.
			Exhaust	0.030 – 0.065 mm	0.0012 – 0.0026 in.
		Limit	Intake	0.08 mm	0.0031 in.
			Exhaust	0.10 mm	0.0039 in.
	Valve margin thickness	STD		1.3 mm	0.051 in.
		Limit		0.5 mm	0.020 in.
Valve spring	Free length			41.64 mm	1.6394 in.
	Installed length			35.0 mm	1.378 in.
	Installed load	at 35 mm (1.378 in.)	STD	16.0 kg	35 lb 157 N
	Squareness		Limit	1.5 mm	0.059 in.
Valve lifter	Lifter diameter		STD	27.975 – 27.985 mm	1.1014 – 1.1018 in.
	Oil clearance		STD	0.015 – 0.046 mm	0.0006 – 0.0018 in.
			Limit	0.10 mm	0.0039 in.

Specifications (Cont'd)

Intake, exhaust manifold and intake chamber	Manifold surface warpage				
	Intake	Limit		0.10 mm	0.0039 in.
	Exhaust	Limit	7M-GE	0.75 mm	0.0295 in.
			7M-GTE	0.50 mm	0.0197 in.
	Intake chamber	Limit		0.10 mm	0.0039 in.
Camshaft	Thrust clearance		STD	0.08 – 0.19 mm	0.0031 – 0.0075 in.
			Limit	0.30 mm	0.0118 in.
	Journal oil clearance	No. 1	STD	0.035 – 0.072 mm	0.0014 – 0.0028 in.
			Limit	0.13 mm	0.0051 in.
		No. 2 – No. 7	STD	0.025 – 0.093 mm	0.0010 – 0.0037 in.
			Limit	0.13 mm	0.0051 in.
	Journal diameter	No. 1	STD	26.949 – 26.965 mm	1.0610 – 1.0616 in.
		No. 2 – No. 7	STD	26.888 – 26.975 mm	1.0586 – 1.0620 in.
	Circle runout		Limit	0.03 mm	0.0012 in.
	Cam lobe height				
	Intake	STD	7M-GE	38.16 mm	1.5024 in.
			7M-GTE	38.35 mm	1.5098 in.
		Limit	7M-GE	37.85 mm	1.4902 in.
			7M-GTE	38.00 mm	1.4961 in.
	Exhaust	STD		38.35 mm	1.5098 in.
		Limit		38.00 mm	1.4961 in.
Idler pulley tension spring	Free length			69 mm	2.72 in.
Pump drive shaft	Thrust clearance		STD	0.06 – 0.13 mm	0.0024 – 0.0051 in.
			Limit	0.30 mm	0.0118 in.
	Oil clearance		STD	0.025 – 0.066 mm	0.0010 – 0.0026 in.
			Limit	0.08 mm	0.0031 in.
	Journal diameter		Front	40.959 – 40.975 mm	1.6126 – 1.6132 in.
			Rear	32.959 – 32.975 mm	1.2976 – 1.2982 in.
Cylinder block	Cylinder head surface warpage		Limit	0.05 mm	0.0020 in.
	Cylinder bore diameter	STD	Mark 0	82.990 – 83.000 mm	3.2673 – 3.2677 in.
			Mark 1	83.001 – 83.010 mm	3.2677 – 3.2681 in.
			Mark 2	83.011 – 83.020 mm	3.2681 – 3.2685 in.
			Mark 3	83.021 – 83.030 mm	3.2685 – 3.2689 in.
			Mark 4	83.031 – 83.040 mm	3.2689 – 3.2693 in.
		Limit	STD	83.24 mm	3.2772 in.
			O/S 0.50	83.74 mm	3.2968 in.
	Cylinder block main journal bore				
		STD	Mark 1	64.024 – 64.030 mm	2.5206 – 2.5209 in.
			Mark 2	64.031 – 64.036 mm	2.5209 – 2.5211 in.
			Mark 3	64.037 – 64.042 mm	2.5211 – 2.5213 in.
		U/S 0.25		64.022 – 64.046 mm	2.5205 – 2.5215 in.

Specifications (Cont'd)

Piston and piston ring	Piston diameter				
	7M-GE	STD	Mark 0	82.900 – 82.910 mm	3.2638 – 3.2642 in.
			Mark 1	82.911 – 82.920 mm	3.2642 – 3.2646 in.
			Mark 2	82.921 – 82.930 mm	3.2646 – 3.2650 in.
			Mark 3	82.931 – 82.940 mm	3.2650 – 3.2653 in.
			Mark 4	82.941 – 82.950 mm	3.2654 – 3.2657 in.
		O/S 0.50		83.40 – 83.45 mm	3.2835 – 3.2854 in.
	7M-GTE		Mark 0	82.910 – 82.920 mm	3.2642 – 3.2646 in.
			Mark 1	82.921 – 82.930 mm	3.2646 – 3.2650 in.
			Mark 2	82.931 – 82.940 mm	3.2650 – 3.2653 in.
			Mark 3	82.941 – 82.950 mm	3.2654 – 3.2657 in.
			Mark 4	82.951 – 82.960 mm	3.2658 – 3.2661 in.
		O/S 0.50		83.41 – 83.46 mm	3.2839 – 3.2858 in.
	Piston oil clearance				
	7M-GE		STD	0.08 – 0.10 mm	0.0031 – 0.0039 in.
			Limit	0.13 mm	0.0051 in.
	7M-GTE		STD	0.07 – 0.09 mm	0.0028 – 0.0035 in.
			Limit	0.13 mm	0.0051 in.
	Piston ring end gap	No. 1 7M-GE	STD	0.23 – 0.38 mm	0.0091 – 0.0150 in.
			Limit	0.68 mm	0.0268 in.
		7M-GTE	STD	0.29 – 0.44 mm	0.0114 – 0.0173 in.
			Limit	0.74 mm	0.0291 in.
		No. 2	STD	0.25 – 0.53 mm	0.0098 – 0.0209 in.
			Limit	1.13 mm	0.0445 in.
		Oil 7M-GE	STD	0.10 – 0.40 mm	0.0039 – 0.0157 in.
			Limit	1.00 mm	0.0394 in.
		7M-GTE	STD	0.10 – 0.44 mm	0.0039 – 0.0173 in.
			Limit	1.04 mm	0.0409 in.
	Ring groove clearance	No. 1	Limit	0.03 – 0.07 mm	0.0012 – 0.0028 in.
		No. 2	Limit	0.02 – 0.06 mm	0.0008 – 0.0024 in.
	Piston pin installing temperature			60°C	140°F
Connecting rod and bearing	Thrust clearance		STD	0.160 – 0.296 mm	0.0063 – 0.0117 in.
			Limit	0.3 mm	0.012 in.
	Big end inner diameter	STD	Mark 1	55.015 – 55.025 mm	2.1659 – 2.1663 in.
			Mark 2	55.026 – 55.035 mm	2.1664 – 2.1667 in.
			Mark 3	55.036 – 55.045 mm	2.1668 – 2.1671 in.
		U/S 0.25		55.015 – 55.045 mm	2.1659 – 2.1671 in.
	Connecting rod bearing center wall thickness				
		STD	Mark 1	1.490 – 1.495 mm	0.0587 – 0.0589 in.
			Mark 2	1.496 – 1.500 mm	0.0589 – 0.0591 in.
			Mark 3	1.501 – 1.505 mm	0.0591 – 0.0593 in.
			Mark 4	1.506 – 1.510 mm	0.0593 – 0.0594 in.
			Mark 5	1.511 – 1.515 mm	0.0595 – 0.0596 in.
		U/S 0.25		1.622 – 1.632 mm	0.0639 – 0.0643 in.
	Bearing oil clearance		STD	0.021 – 0.053 mm	0.0008 – 0.0021 in.
			Limit	0.07 mm	0.0028 in.
	Pin oil clearance		STD	0.005 – 0.011 mm	0.0002 – 0.0004 in.
			Limit	0.02 mm	0.0008 in.

Specifications (Cont'd)

Connecting rod and bearing (cont'd)	Piston pin diameter			21.996 – 22.009 mm	0.8660 – 0.8665 in.
	Rod bend	Limit	per 100 mm (3.94 in.)	0.05 mm	0.0020 in.
	Rod twist	Limit	per 100 mm (3.94 in.)	0.15 mm	0.0059 in.
Crankshaft and bearing	Thrust clearance		STD	0.05 – 0.25 mm	0.0020 – 0.0098 in.
			Limit	0.30 mm	0.0118 in.
	Thrust washer thickness	STD		2.925 – 2.975 mm	0.1152 – 0.1171 in.
		O/S 0.125		2.988 – 3.038 mm	0.1176 – 0.1196 in.
	Main journal oil cleanrance		STD	0.030 – 0.048 mm	0.0012 – 0.0019 in.
			Limit	0.07 mm	0.0028 in.
	Main journal diameter	STD	Mark 0	60.007 – 60.012 mm	2.3625 – 2.3627 in.
			Mark 1	60.001 – 60.006 mm	2.3622 – 2.3624 in.
			Mark 2	59.994 – 60.000 mm	2.3620 – 2.3622 in.
		U/S 0.25		59.730 – 59.740 mm	2.3516 – 2.3520 in.
	Main bearing center wall thickness				
		STD	Mark 1	1.988 – 1.991 mm	0.0783 – 0.0784 in.
			Mark 2	1.992 – 1.994 mm	0.0784 – 0.0785 in.
			Mark 3	1.995 – 1.996 mm	0.0785 – 0.0786 in.
			Mark 4	1.998 – 2.000 mm	0.0787 – 0.0787 in.
			Mark 5	2.001 – 2.003 mm	0.0788 – 0.0789 in.
		U/S 0.25		2.123 – 2.133 mm	0.0836 – 0.0840 in.
	Crank pin diameter		Mark 0	51.993 – 52.000 mm	2.0470 – 2.0472 in.
			Mark 1	51.985 – 51.992 mm	2.0466 – 2.0469 in.
			Mark 2	51.976 – 51.984 mm	2.0463 – 2.0466 in.
		U/S 0.25		51.725 – 51.735 mm	2.0364 – 2.0368 in.
	Circle runout		Limit	0.06 mm	0.0024 in.
	Main journal taper and out-of-round		Limit	0.02 mm	0.0008 in.
	Check pin journal taper and out-of-round				
			Limit	0.02 mm	0.0008 in.
Flywheel	Runout		Limit	0.1 mm	0.004 in.

Torque Specifications

Part tightened	kg-cm	ft-lb	N·m
Camshaft timing pulley x Camshaft	500	36	49
Oil pump drive pulley x Oil pump drive shaft	220	16	22
Crankshaft x Crank pulley	2,700	195	265
Crankshaft x Flywheel	750	54	74
Crankshaft x Drive plate	750	54	74
Air intake chamber x Intake manifold	180	13	18
Air intake chamber x Air intake connector (7M-GE)	180	13	18
Throttle body x Air intake connector	130	9	13
Cylinder head x No. 1 and No. 2 cylinder head covers	25	22 in.-lb	2.5
Cylinder head x No. 3 cylinder head cover	180	13	18
Cylinder head x Cylinder block	800	58	78

Torque Specifications (Cont'd)

Part tightened		kg-cm	ft-lb	N·m
Cylinder head x Spark plug		180	13	18
Cylinder head x No. 2 engine hanger		400	29	39
Cylinder head x Heater union		600	43	59
Cylinder head x EGR cooler		140	10	14
Cylinder head x Camshaft bearing cap		200	14	20
Cylinder head x intake manifold		180	13	18
Cylinder head x Exhaust manifold		400	29	39
Cylinder head x Distributor (7M-GE)		140	10	14
Cylinder head x Cam position sensor (7M-GTE)		140	10	14
Connecting rod cap x Connecting rod		650	47	64
Cylinder block x Main bearing cap		1,040	75	102
Cylinder block x Timing belt case x Idler pulley		500	36	49
Cylinder bloc' x Timing belt case	12 mm	195	14	19
	14 mm	400	29	39
Cylinder block x Oil pump drive shaft thrust plate		130	9	13
Oil nozzle x Cylinder block		250	18	25

TURBOCHARGER SYSTEM

Specifications

Turbocharger	Turbocharging pressure	STD	M/T	0.39 – 0.53 kg/cm^2 (5.5 – 7.5 psi, 38 – 52 kPa)
			A/T	0.34 – 0.42 kg/cm^2 (4.8 – 6.0 psi, 33 – 41 kPa)
	Turbine shaft axial play		STD	0.13 mm (0.0051 in.) or less
	Turbine shaft radial play		STD	0.18 mm (0.0071 in.) or less

Torque Specifications

Part tightened	kg-cm	ft-lb	N·m
Turbocharger x Turbin outlet elbow	440	32	43
Oil pipe x Turbocharger	130	9	13
Water pipe x Turbocharger	75	65 in.-lb	7.4
Oil pipe x Cylinder block (Bolt)	350	25	34
Oil pipe x Cylinder block (Nut)	130	9	13
Turbocharger stay x Turbocharger	810	59	79
Turbocharger stay x Engine mounting bracket	590	43	58
Turbocharger x Exhaust manifold	450	33	44

EFI SYSTEM
Specifications

Fuel pressure regulator	Fuel pressure	7M-GTE	at No vacuum	2.7 – 3.1 kg/cm^2 (38 – 44 psi, 265 – 304 kPa)
		7M-GTE	at No vacuum	2.3 – 2.8 kg/cm^2 (33 – 40 psi, 226 – 275 kPa)
Cold start injector	Resistance			2 – 4 Ω
	Fuel leakage			One drop or less of fuel per minute
Injector	Resistance	7M-GE		Approx. 13.8 Ω
		7M-GTE		2.0 – 3.8 Ω
	Injection volume	7M-GE		69 – 85 cc (4.2 – 5.2 cu in.)/15 sec.
		7M-GTE		101 – 114 cc (6.2 – 7.0 cu in.)/15 sec.
	Difference volume between each injector			9 cc (0.31 cu in.) or less
	Fuel leakage			One drop or less of fuel per minute
Air flow meter	Resistance			
	7M-GE	E2 – VS		200 – 600 Ω (Measuring plate fully closed) 20 – 1,200 Ω (Measuring plate fully open)
		E2 – VC		200 – 400 Ω
		E1 – FC		Infinity (Measuring plate fully closed) Zero (Others)
		E2 – THA	at –20°C (–4°F)	10 – 20 kΩ
			at 0°C (32°F)	4 – 7 kΩ
			at 20°C (68°F)	2 – 3 kΩ
			at 40°C (104°F)	0.9 – 1.3 kΩ
			at 60°C (140°F)	0.4 – 0.7 kΩ
	7M-GTE	E2 – THA	at –20°C (–4°F)	10 – 20 kΩ
			at 0°C (32°F)	4 – 7 kΩ
			at 20°C (68°F)	2 – 3 kΩ
			at 40°C (104°F)	0.9 – 1.3 kΩ
			at 60°C (140°F)	0.4 – 0.7 kΩ

	Clearance between stop screw and lever		Between terminals	Resistance
Throttle position sensor	7M-GE	7M-GTE		
	0 mm (0 in.)	0 mm (0 in.)	VTA – E2	0.2 – 1.2 kΩ
	0.40 mm (0.0157 in.)	0.50 mm (0.0197 in.)	IDL – E2	2.3 kΩ or less
	0.75 mm (0.0295 in.)	0.90 mm (0.0354 in.)	IDL – E2	Infinity
	Throttle valve fully opened position		VTA – E2	3.5 – 10.3 kΩ
	–		VC – E2	4.25 – 8.25 kΩ

Specifications (Cont'd)

ISC valve	Resistance	B1 – S1 or S3 B2 – S2 or S4	10 – 30 Ω 10 – 30 Ω
Solenoid resistor (7M-GTE)	Resistance	+B – No. 10 ~ No. 30	3 Ω each
Cold start injector time switch	Resistance STA – STJ STA – Ground	 below 15°C (59°F) above 30°C (86°F)	 25 – 45 Ω 65 – 85 Ω 25 – 85 Ω
Water temp. sensor	Resistance	at –20°C (–4°F) at 0°C (32°F) at 20°C (68°F) at 40°C (104°F) at 60°C (140°F) at 80°C (176°F)	10 – 20 kΩ 4 – 7 kΩ 2 – 3 kΩ 0.9 – 1.3 kΩ 0.4 – 0.7 kΩ 0.2 – 0.4 kΩ
Fuel control VSV (7M-GTE)	Resistance		30 – 50 Ω
Fuel pump resistor	Resistance		Approx. 0.7 Ω
Oxygen sensor	Heater resistance	7M-GTE	3.0 – 3.6 Ω
Sub-oxygen sensor [7M-GE (Calif. only)]	Heater resistance	at 20°C (68°F)	5.1 – 6.3 Ω
EGR gas temp. sensor (Calif. only)	Resistance	at 50°C (122°F) at 100°C (212°F) at 150°C (302°F)	69.40 – 88.50 kΩ 11.89 – 14.37 kΩ 2.79 – 3.59 kΩ

ECU

HINT:
- Perform all voltage and resistance measurements with the computer connected.
- Verify that the battery voltage is 11 V or above when the ignition switch is ON.

Voltage

Terminals	Condition		STD Voltage (V)
BATT – E1	–		10 – 14
IG SW – E1	Ignition SW ON		10 – 14
M-REL – E1	Ignition SW ON		10 – 14
+B(+B1) – E1	Ignition SW ON		10 – 14
IDL – E2 (7M-GE)	Ignition SW ON	Throttle valve open	10 – 14
IDL – E2 (7M-GTE)	Ignition SW ON	Throttle valve open	4 – 6

Specifications (Cont'd)

ECU (cont'd)	Terminals	Condition		STD Voltage (V)
	VC – E2	Ignition SW ON	–	4 – 6
	VTA – E2	Ignition SW ON	Throttle valve fully closed	0.1 – 1.0
			Throttle valve fully open	3.2 – 4.2
	*1 VS – E2	Ignition SW ON	Measuring plate fully closed	3.7 – 4.3
			Measuring plate fully open	0.2 – 0.5
		Idling		2.3 – 2.8
		3,000 rpm		1.0 – 2.0
	*2 KS – Body ground	Ignition SW ON		4 – 6
		Cranking or running		2 – 4
	*2 VC – Body ground	Ignition SW ON		4 – 6
	No. 10, No. 20, No. 30 – E01, E02	Ignition SW ON		10 – 14
	THA – E2	Ignition SW ON	Intake air temperature 20°C (68°F)	1 – 3
	THW – E2	Ignition SW ON	Coolant temperature 80°C (176°F)	0.1 – 1.0
	STA – E1	Cranking		6 – 14
	IGT – E1	Ignition SW ON		0.7 – 1.0
	*2IGDA, IGDB – E1	Idling		1 – 3
	ISC1 ~ ISC4 – E1	Ignition SW ON		9 – 14
	W – E1	No trouble ("CHECK ENGINE" warning light off) and engine running		8 – 14
	A/C – E1	Ignition SW ON	Air conditioning ON	10 – 14
	TE1 – E1	Ignition SW ON	Check connector TE1 – E1 not connect	4 – 6
			Check connector TE1 – E1 connect	0
	NSW(A/T)– E1	Ignition SW ON	Shift position P or N range	0
			Ex. P or N range	10 – 14
	N/C(M/T)– E1	Ignition SW ON	Clutch pedal not depressed	0
			Clutch pedal depressed	10 – 14

Specifications (Cont'd)

ECU (cont'd)	Terminal	Condition		STD Voltage (V)
	*3 DFG – E1	Ignition SW ON	Defogger SW OFF	10 – 14
			Defogger SW ON	0
	*3 LP – E1	Headlight SW OFF		10 – 14
		Headlight SW ON		0
	Resistance			
	Terminals	Condition		Resistance (Ω)
	IDL – E2	Throttle valve fully open		Infinity
		Throttle valve fully closed		2,300 or less
	VTA – E2	Throttle valve fully open		3,500 – 10,300
		Throttle valve fully closed		200 – 1,200
	VC – E2	–		4,250 – 8,250
	VS – E2	Measuring plate fully closed		200 – 600
		Measuring plate fully open		20 – 1,200
	THA – E2	Intake air temperature 20°C (68°F)		2,000 – 3,000
	THW – E2	Coolant temperature 80°C (176°F)		200 – 400
	G1,G2 – G⊖	–		140 – 180
	NE – G⊖ (7M-GTE)	–		140 – 180
	NE – G⊖ (7M-GE)	–		180 – 220
	ISC1,ISC2 ISC3,ISC4 – +B	–		10 – 30
Fuel cut rpm	w/ Vehicle speed 0 km/h and coolant temp. 80°C (176°F)			
	7M-GE	Fuel cut rpm		1,800 rpm
		Fuel return rpm		1,200 rpm
	7M-GTE	Fuel cut rpm		1,600 rpm
		Fuel return rpm		1,200 rpm

*1 7M-GE only
*2 7M-GTE only
*3 ex. 7M-GTE A/T

Torque Specifications

Part tightened		kg-cm	ft-lb	N·m
Fuel line	Union bolt type	300	22	29
	Flare nut type	310	22	30
Fuel pump x Fuel tank		35	30 in.-lb	3.4
Cold start injector x Air intake chamber		55	48 in.-lb	5.4
Cold start injector tube x Cold start injector		180	13	18
Cold start injector tube x Delivery pipe		300	22	29
Fuel pressure regulator x Delivery pipe		250	18	25
No. 2 fuel pipe x Delivery pipe		250	18	25
Delivery pipe x Cylinder head		180	13	18
No. 1 fuel pipe x Delivery pipe		400	29	39
No. 1 fuel pipe x Fuel pipe support		300	22	29
Air intake connector x Air intake chamber (7M-GE)		180	13	18
Fuel sender gauge x Fuel tank		25	22 in.-lb	2.5
Fuel tank bracket x Body		185	15	20
Fuel tank band bracket x Body		380	27	37
Fuel tank band x Body		220	16	22
Fuel tank drain plug		125	9	12
Throttle body x Air intake chamber		130	9	13
ISC valve x Air intake chamber		130	9	13

COOLING SYSTEM

Specifications

Engine coolant capacity			See page A-2
Thermostat	Valve opening temperature		86 – 90°C 187 – 194°F
	Valve lift at 100°C (212°F)		8 mm (0.31 in.) or more
Radiator	Relief valve opening pressure	STD	0.75 – 1.05 kg/cm^2 (10.7 – 14.9 psi, 74 – 103 kPa)
		Limit	0.6 kg/cm^2 8.5 psi 59 kPa

Torque Specifications

Part tightened		kg-cm	ft-lb	N·m
Drain plug		350	25	34
Water outlet x Water outlet housing		80	69 in.-lb	7.8
Water pump x Cylinder block	10 mm	90	78 in.-lb	8.8
	12 mm	195	14	20

LUBRICATION SYSTEM

Specifications

Engine oil capacity			See page A-35
Oil pressure	at Idle speed		0.3 kg/cm^2 (4.3 psi, 29 kPa) or more
	at 3,000 rpm		2.5 – 5.0 kg/cm^2 36 – 71 psi 245–490 kPa
Oil pump	Body clearance	STD	0.105 – 0.175 mm 0.0041 – 0.0069 in.
		Limit	0.2 mm 0.008 in.
	Side clearance	STD	0.03 – 0.09 mm 0.0012 – 0.0035 in.
		Limit	0.15 mm 0.0059 in.
	Gear backlash	STD	0.5 – 0.6 mm 0.020 – 0.024 in.
		Limit	0.9 mm 0.035 in.
	Relief valve operating pressure		4.4 – 5.0 kg/cm^2 63 – 71 psi 431–490 kPa

Torque Specifications

Part tightened	kg-cm	ft-lb	N·m
Engine oil drain plug	350	25	34
Oil pump cover x Oil pump body	75	65 in.-lb	7.4
Relief valve x Oil pump cover	375	27	37
Oil pump x Cylinder block	220	16	22
Oil pump strainer x Oil pump body	130	9	13
Oil pump outlet pipe x Oil pump	350	25	34
Oil pump outlet pipe x Union	350	25	34
Oil pan x Cylinder block	130	9	13
Oil pressure regulator plug	375	27	37
Oil filter bracket x Cylinder block	500	36	49

IGNITION SYSTEM

Ignition timing	T/M in N range			10° BTDC @ Idle [Check connector terminals T_{E1} and E_1 connect]	
Spark plug	Type	7M-GE	ND	PQ16R	
			NGK	BCPR5EP11	
		7M-GTE	ND	PQ20R-P8	
			NGK	BCPR6EP-N8	
	Gap	7M-GE	STD	1.1 mm	0.043 in.
			Limit	1.3 mm	0.051 in.
		7M-GTE	STD	0.8 mm	0.031 in.
			Limit	1.0 mm	0.039 in.
High-tension cord	Resistance		Limit	25 kΩ per cord	
Ignition coil	Primary coil resistance		7M-GE	0.24 – 0.30 Ω	
			7M-GTE	0.3 – 0.5 Ω	
	Secondary coil resistance (7M-GE only)			9.2 – 12.4 kΩ	
Distributor (7M-GE) or cam position sensor (7M-GTE)	Air gap				
	G1, G2 and NE pickups		7M-GE	0.2 mm (0.008 in.) or more	
			7M-GTE	0.2 – 0.4 mm	0.008 – 0.016 in.
	Pickup coil resistance				
	G1 and G2 pickups			140 – 180 Ω	
	NE pickup		7M-GE	180 – 220 Ω	
			7M-GTE	140 – 180 Ω	

STARTING SYSTEM

Starter	Rated voltage and output power			12 V 1.4 kW	
	No-load characteristic		Current	90A or less at 11.5 V	
			rpm	3,500 rpm or more	
	Brush length		STD	15.5 mm	0.610 in.
			Limit	10.0 mm	0.394 in.
	Commutator	Outer diameter	STD	30 mm	1.18 in.
			Limit	29 mm	1.14 in.
		Undercut depth	STD	0.6 mm	0.024 in.
			Limit	0.2 mm	0.008 in.
		Circle runout	Limit	0.05 mm	0.0020 in.
	Spring installed load		STD	1.79 – 2.41 kg (3.9 – 5.3 lb, 18 – 24 N)	
			Limit	1.2 kg	2.6 lb 12 N

CHARGING SYSTEM

Drive belt tension			See page A-2	
Battery specific gravity When fully charged at 20°C (68°F)			1.25 – 1.27	
Alternator	Rated output ampere	7M-GE	12 V	70 A
		7M-GTE	12 V	80 A
	Rotor coil resistance		2.8 – 3.0 Ω	
	Slip ring diameter	STD	14.2 – 14.4 mm	0.559 – 0.567 in.
		Limit	12.8 mm	0.504 in.
	Bush exposed length	STD	10.5 mm	0.413 in.
		Limit	1.5 mm	0.059 in.
Alternator regulator (IC)	Regulator voltage	at 25°C (77°F)	14.0 – 15.0 V	
		at 115°C (239°F)	13.5 – 14.3 V	

CLUTCH

Specifications

Pedal height (from asphalt sheet)			157 – 167 mm	6.18 – 6.57 in.
Push rod play at pedal top			1 – 5 mm	0.04 – 0.20 in.
Pedal freeplay			5 – 15 mm	0.20 – 0.59 in.
Clutch release point (from pedal stroke end position to release point)			25 mm (0.98 in.) or more	
Disc rivet head depth		Limit	0.3 mm	0.012 in.
Disc runout		Limit	0.8 mm	0.031 in.
Diaphragm spring out-of-alignment		Limit	0.5 mm	0.020 in.
Diaphragm spring finger wear	Depth	Limit	0.6 mm	0.024 in.
	Width	Limit	5.0 mm	0.197 in.
Flywheel runout		Limit	0.2 mm	0.008 in.

Torque Specifications

Part tightened	kg-cm	ft-lb	N·m
Clutch cover x Flywheel	195	14	19
Reservoir tank set bolt	250	18	25
Clutch line tube union	155	11	15
Flexible hose x Release cylinder (7M-GE)	235	17	23
Bleeder plug	110	8	11
Flywheel set bolt	750	54	74
Release cylinder x Clutch housing	120	9	12

MANUAL TRANSMISSION (W58)

Specifications

Output shaft				
2nd gear journal diameter		Limit	42.85 mm	1.6870 in.
3rd gear journal diameter		Limit	37.80 mm	1.4882 in.
Flange thickness		Limit	5.60 mm	0.2205 in.
Runout		Limit	0.06 mm	0.0024 in.
1st gear inner race flange thickness		Limit	4.70 mm	0.1850 in.
1st gear inner race outer diameter		Limit	42.85 mm	1.6870 in.
Counter gear				
Center bearing journal outer diameter		Limit	29.90 mm	1.1772 in.
Counter 5th gear journal outer diameter		Limit	26.85 mm	1.0571 in.
Gear thrust clearance				
	1st, 2nd & 3rd	STD	0.10 – 0.25 mm	0.0039 – 0.0098 in.
		Limit	0.30 mm	0.0118 in.
	Counter 5th	STD	0.10 – 0.41 mm	0.0039 – 0.0161 in.
		Limit	0.46 mm	0.0181 in.
Gear oil clearance	1st & 2nd	STD	0.009 – 0.060 mm	0.0004 – 0.0024 in.
		Limit	0.15 mm	0.0059 in.
	3rd	STD	0.060 – 0.103 mm	0.0024 – 0.0041 in.
		Limit	0.20 mm	0.0079 in.
	Counter 5th	STD	0.009 – 0.062 mm	0.0004 – 0.0024 in.
		Limit	0.15 mm	0.0059 in.
Shift fork to hub sleeve clearance		Limit	1.0 mm	0.039 in.
Synchronizer ring to gear clearance		STD	0.7 – 1.7 mm	0.028 – 0.067 in.
		Limit	0.5 mm	0.020 in.
Input shaft snap ring thickness		Mark		
		1	2.05 – 2.10 mm	0.0807 – 0.0827 in.
		2	2.10 – 2.15 mm	0.0827 – 0.0846 in.
		3	2.15 – 2.20 mm	0.0846 – 0.0866 in.
		4	2.20 – 2.25 mm	0.0866 – 0.0886 in.
		5	2.25 – 2.30 mm	0.0886 – 0.0906 in.
		11	2.30 – 2.35 mm	0.0906 – 0.0925 in.
		12	2.35 – 2.40 mm	0.0925 – 0.0945 in.

Specifications (Cont'd)

Output shaft snap ring thickness			
Front	Mark		
	D	1.80 – 1.85 mm	0.0709 – 0.0728 in.
	11	1.86 – 1.91 mm	0.0732 – 0.0752 in.
	12	1.92 – 1.97 mm	0.0756 – 0.0776 in.
	13	1.98 – 2.03 mm	0.0780 – 0.0799 in.
	14	2.04 – 2.09 mm	0.0803 – 0.0823 in.
	15	2.10 – 2.15 mm	0.0827 – 0.0846 in.
Rear	Mark		
	8	2.31 – 2.36 mm	0.0909 – 0.0929 in.
	9	2.37 – 2.42 mm	0.0933 – 0.0953 in.
	10	2.43 – 2.48 mm	0.0957 – 0.0976 in.
	11	2.49 – 2.54 mm	0.0980 – 0.1000 in.
	12	2.55 – 2.60 mm	0.1004 – 0.1024 in.
	13	2.61 – 2.66 mm	0.1028 – 0.1047 in.
	14	2.68 – 2.73 mm	0.1055 – 0.1075 in.
	15	2.74 – 2.79 mm	0.1079 – 0.1098 in.
Reverse gear	Mark		
	5	2.25 – 2.30 mm	0.0886 – 0.0906 in.
	11	2.30 – 2.35 mm	0.0906 – 0.0925 in.
	12	2.35 – 2.40 mm	0.0925 – 0.0945 in.
	13	2.40 – 2.45 mm	0.0945 – 0.0965 in.
	14	2.45 – 2.50 mm	0.0965 – 0.0984 in.
	15	2.50 – 2.55 mm	0.0984 – 0.1004 in.
	16	2.55 – 2.60 mm	0.1004 – 0.1024 in.
	17	2.61 – 2.66 mm	0.1028 – 0.1047 in.
	18	2.67 – 2.72 mm	0.1051 – 0.1071 in.
	19	2.73 – 2.78 mm	0.1075 – 0.1094 in.
	20	2.79 – 2.84 mm	0.1098 – 0.1118 in.
	21	2.85 – 2.90 mm	0.1122 – 0.1142 in.
	22	2.91 – 2.96 mm	0.1146 – 0.1165 in.
	23	2.97 – 3.02 mm	0.1169 – 0.1189 in.

Specifications (Cont'd)

Counter gear snap ring thickness			
Front	Mark		
	1	2.05 – 2.10 mm	0.0807 – 0.0827 in.
	2	2.10 – 2.15 mm	0.0827 – 0.0846 in.
	3	2.15 – 2.20 mm	0.0846 – 0.0866 in.
	4	2.20 – 2.25 mm	0.0866 – 0.0886 in.
	5	2.25 – 2.30 mm	0.0886 – 0.0906 in.
	6	2.30 – 2.35 mm	0.0906 – 0.0925 in.
	7	2.35 – 2.40 mm	0.0925 – 0.0945 in.
Rear	Mark		
	1	1.90 – 1.95 mm	0.0748 – 0.0768 in.
	2	1.96 – 2.01 mm	0.0772 – 0.0791 in.
	3	2.02 – 2.07 mm	0.0795 – 0.0815 in.
	4	2.08 – 2.13 mm	0.0819 – 0.0839 in.
	5	2.14 – 2.19 mm	0.0843 – 0.0862 in.
	6	2.20 – 2.25 mm	0.0866 – 0.0886 in.
	7	2.26 – 2.31 mm	0.0890 – 0.0909 in.
No. 3 clutch hub	Mark		
	2	2.06 – 2.11 mm	0.0811 – 0.0831 in.
	3	2.12 – 2.17 mm	0.0835 – 0.0854 in.
	4	2.18 – 2.23 mm	0.0858 – 0.0878 in.
	5	2.24 – 2.29 mm	0.0882 – 0.0902 in.
Oil seal drive in depth	Front bearing retainer	11.4 – 12.0 mm	0.449 – 0.472 in.
	Speedometer driven gear	25 mm	0.98 in.

Torque Specifications

Part tightened	kg-cm	ft-lb	N·m
Shift fork set bolt	125	9	12
Straight screw plug	250	18	25
Reverse idler gear shaft stopper bolt	250	18	25
Front bearing retainer set bolt	250	18	25
Extension housing x Intermediate plate	375	27	37
Restrict pin	410	30	40
Shift lever housing x Shift and select lever shaft	400	29	39
Shift lever retainer x Extension housing	185	13	18
Drain and filler plugs	410	30	40
Back-up light switch	410	30	40
Clutch housing x Transmission case	375	27	37
Center bearing retainer x Intermediate plate	130	9	13
Clutch housing x Engine	400	29	39
Engine rear mounting bolt	250	18	25
Stiffener plate bolt	380	27	37

MANUAL TRANSMISSION (R154)

Specifications

Output shaft			
1st gear journal diameter	Limit	38.860 mm	1.5299 in.
2nd gear journal diameter	Limit	46.860 mm	1.8499 in.
3rd gear journal diameter	Limit	37.860 mm	1.4905 in.
Flange thickness	Limit	4.70 mm	0.1850 in.
Runout	Limit	0.06 mm	0.0024 in.
Counter gear			
Roller bearing journal diameter	Limit	27.860 mm	1.0968 in.
Gear thrust clearance			
1st	STD	0.10 – 0.45 mm	0.0039 – 0.0177 in.
	Limit	0.50 mm	0.0197 in.
2nd & 3rd	STD	0.10 – 0.25 mm	0.0039 – 0.0098 in.
	Limit	0.30 mm	0.0118 in.
Counter 5th	STD	0.10 – 0.35 mm	0.0039 – 0.0138 in.
	Limit	0.40 mm	0.0157 in.
Gear oil clearance 1st	STD	0.020 – 0.073 mm	0.0008 – 0.0029 in.
	Limit	0.16 mm	0.0063 in.
2nd, 3rd & Counter 5th	STD	0.015 – 0.068 mm	0.0006 – 0.0027 in.
	Limit	0.16 mm	0.0063 in.
Shift fork to hub sleeve clearance	Limit	1.0 mm	0.039 in.
Synchronizer ring to gear clearance	STD	0.8 – 1.6 mm	0.031 – 0.063 in.
	Limit	0.6 mm	0.024 in.
Input shaft snap ring thickness	Mark		
	A	2.10 – 2.15 mm	0.0827 – 0.0846 in.
	B	2.15 – 2.20 mm	0.0846 – 0.0866 in.
	C	2.20 – 2.25 mm	0.0866 – 0.0886 in.
	D	2.25 – 2.30 mm	0.0886 – 0.0906 in.
	E	2.30 – 2.35 mm	0.0906 – 0.0925 in.
	F	2.35 – 2.40 mm	0.0925 – 0.0945 in.
	G	2.40 – 2.45 mm	0.0945 – 0.0965 in.
Counter gear snap ring (Front bearing)	Mark		
	A	2.00 – 2.05 mm	0.0787 – 0.0807 in.
	B	2.05 – 2.10 mm	0.0807 – 0.0827 in.
	C	2.10 – 2.15 mm	0.0827 – 0.0846 in.
	D	2.15 – 2.20 mm	0.0846 – 0.0866 in.
	E	2.20 – 2.25 mm	0.0866 – 0.0886 in.

Specifications (Cont'd)

Output shaft snap ring thickness			
No. 2 clutch hub	Mark		
	A	1.80 – 1.85 mm	0.0709 – 0.0728 in.
	B	1.85 – 1.90 mm	0.0728 – 0.0748 in.
	C	1.90 – 1.95 mm	0.0748 – 0.0768 in.
	D	1.95 – 2.00 mm	0.0768 – 0.0787 in.
	E	2.00 – 2.05 mm	0.0787 – 0.0807 in.
	F	2.05 – 2.10 mm	0.0807 – 0.0827 in.
	G	2.10 – 2.15 mm	0.0827 – 0.0846 in.
No. 1 clutch hub	Mark		
	A	2.30 – 2.35 mm	0.0906 – 0.0925 in.
	B	2.35 – 2.40 mm	0.0925 – 0.0945 in.
	C	2.40 – 2.45 mm	0.0945 – 0.0965 in.
	D	2.45 – 2.50 mm	0.0965 – 0.0984 in.
	E	2.50 – 2.55 mm	0.0984 – 0.1004 in.
	F	2.55 – 2.60 mm	0.1004 – 0.1024 in.
	G	2.60 – 2.65 mm	0.1024 – 0.1043 in.
Rear	Mark		
	A	2.65 – 2.70 mm	0.1043 – 0.1063 in.
	B	2.70 – 2.75 mm	0.1063 – 0.1083 in.
	C	2.75 – 2.80 mm	0.1083 – 0.1102 in.
	D	2.80 – 2.85 mm	0.1102 – 0.1122 in.
	E	2.85 – 2.90 mm	0.1122 – 0.1142 in.
	F	2.90 – 2.95 mm	0.1142 – 0.1161 in.
	G	2.95 – 3.00 mm	0.1161 – 0.1181 in.
	H	3.00 – 3.05 mm	0.1181 – 0.1201 in.
	J	3.05 – 3.10 mm	0.1201 – 0.1220 in.
	K	3.10 – 3.15 mm	0.1220 – 0.1240 in.
	L	3.15 – 3.20 mm	0.1240 – 0.1260 in.
	M	3.20 – 3.25 mm	0.1260 – 0.1280 in.
	N	3.25 – 3.30 mm	0.1280 – 0.1299 in.
	P	3.30 – 3.35 mm	0.1299 – 0.1319 in.
	Q	3.35 – 3.40 mm	0.1319 – 0.1339 in.
	R	3.40 – 3.45 mm	0.1339 – 0.1358 in.
	S	3.45 – 3.50 mm	0.1358 – 0.1378 in.
Oil seal drive in depth	Front bearing retainer	11.2 – 12.2 mm	0.441 – 0.480 in.
	Speedometer driven gear	25 mm	0.98 in.

Torque Specifications

Part tightened	kg-cm	ft-lb	N·m
Reverse shift arm bracket	185	13	18
Rear bearing retainer x Intermediate plate	185	13	18
Counter gear rear lock nut	1,300	94	127
Shift fork x Shift fork shaft	200	14	20
Straight screw plug	190	14	19
Front bearing retainer x Transmission case	170	12	17
Transmission case x Extension housing	380	27	37
Shift lever housing bolt	390	28	38
Clutch housing x Transmission case	370	27	36
Oil receiver x Extension housing	115	8	11
Back-up light switch	380	27	37
Restrict pin	380	27	37
Shift lever retainer x Extension housing	160	12	16
Clutch housing x Engine	400	29	39
Clutch cover x Flywheel	195	14	19
Clutch housing cover bolt	120	9	12
Engine rear mounting bolt	250	18	25
Stiffener plate bolt	380	27	37

AUTOMATIC TRANSMISSION (A340E)

Specifications

Line pressure (wheel locked)					
7M-GE					
Engine idling	D range		3.5 – 4.3 kg/cm^2	50 – 61 psi	343 – 422 kPa
	R range		4.9 – 6.1 kg/cm^2	70 – 87 psi	481 – 598 kPa
At stall	D range		8.8 – 11.5 kg/cm^2	125 – 164 psi	863 – 1,128 kPa
(Throttle valve fully opened)	R range		12.2 – 15.9 kg/cm^2	174 – 226 psi	1,196 – 1,559 kPa
7M-GTE					
Engine idling	D range		4.1 – 4.9 kg/cm^2	58 – 70 psi	402 – 481 kPa
	R range		5.0 – 6.2 kg/cm^2	71 – 88 psi	490 – 608 kPa
At stall	D range		12.3 – 15.0 kg/cm^2	175 – 213 psi	1,206 – 1,471 kPa
(Throttle valve fully opened)	R range		15.1 – 18.8 kg/cm^2	215 – 267 psi	1,481 – 1,844 kPa
Engine stall revolution	7M-GE		2,200 ± 150 rpm		
	7M-GTE		2,500 ± 150 rpm		
Time lag N range →	D range		Less than 1.2 seconds		
N range →	R range		Less than 1.5 seconds		
Engine idling speed (A/C OFF)	N range	7M-GE	700 rpm		
		7M-GTE	650 rpm		
Throttle cable adjustment					
Throttle valve fully opened			Between boot end face and inner cable stopper		
			0 – 1 mm	0 – 0.04 in.	
Torque converter installing					
Drive plate runout	Limit		0.20 mm	0.0079 in.	
Torque converter sleeve runout	Limit		0.30 mm	0.0118 in.	

Specifications (Cont'd)

Shift point (7M-GE) km/h (mph)			Throttle valve fully open [ ] Fully closed							
			1 → 2	2 → 3	3 → O/D	[3→O/D]	[O/D→3]	O/D → 3	3 → 2	2 → 1
	D range	NORM	44–48 (27–30)	92–99 (57–62)	146–155 (91–96)	34–38 (21–24)	25–29 (16–18)	141–150 (88–93)	85–93 (53–58)	39–43 (24–27)
		PWR	47–51 (30–33)	101–107 (63–68)	161–168 (103–108)	41–45 (25–28)	25–29 (16–18)	155–163 (99–103)	94–100 (60–64)	42–46 (26–29)
	2 range	NORM PWR	44–48 (27–30)	106–114 (66–71)	–	–	–	–	93–101 (58–63)	39–43 (24–27)
	L range	NORM PWR	–	–	–	–	–	–	–	46–50 (29–31)

Lock-up point (7M-GE) km/h (mph)			Throttle valve opening 5%					
			Lock-up ON			Lock-up OFF		
			2nd	* 3rd	O/D	2nd	* 3rd	O/D
	D range	NORM	–	73–78 (45–48)	58–62 (36–39)	–	68–72 (42–45)	55–58 (34–36)
		PWR	–	73–78 (45–48)	63–66 (39–41)	–	68–72 (42–45)	57–61 (35–38)
	* O/D switch OFF							

Shift point (7M-GTE) km/h (mph)			Throttle valve fully open [ ] Fully closed							
			1 → 2	2 → 3	3 → O/D	[3→O/D]	[O/D→3]	O/D → 3	3 → 2	2 → 1
	D range	NORM	40–44 (25–27)	94–99 (58–62)	149–159 (93–99)	38–41 (24–25)	28–32 (17–20)	143–153 (89–95)	86–94 (53–58)	34–39 (21–24)
		PWR	47–51 (30–32)	102–111 (63–69)	173–183 (108–114)	45–50 (28–31)	28–32 (17–20)	166–177 (103–110)	95–103 (59–64)	41–45 (25–28)
	2 range	NORM PWR	40–44 (25–27)	110–118 (68–73)	–	–	–	–	102–111 (63–69)	34–39 (21–24)
	L range	NORM PWR	–	–	–	–	–	–	–	51–56 (32–35)

Lock-up point (7M-GTE) km/h (mph)			Throttle valve opening 5%					
			Lock-up ON			Lock-up OFF		
			2nd	*3rd	O/D	2nd	*3rd	O/D
	D range	NORM	–	80–85 (50–53)	60–65 (37–40)	–	74–79 (46–49)	57–62 (35–39)
		PWR	–	80–85 (50–53)	69–73 (43–45)	–	74–79 (46–49)	63–67 (39–42)
	* O/D switch OFF							

Oil pump				
	Body clearance	STD	0.07 – 0.15 mm	0.0028 – 0.0059 in.
		Limit	0.3 mm	0.012 in.
	Tip clearance	STD	0.11 – 0.14 mm	0.0043 – 0.0055 in.
		Limit	0.3 mm	0.012 in.
	Side clearance	STD	0.02 – 0.05 mm	0.0008 – 0.0020 in.
		Limit	0.1 mm	0.004 in.

Specifications (Cont'd)

Bushing bore	Oil pump body	Limit	38.19 mm	1.5035 in.
	Stator shaft (FR)	Limit	21.58 mm	0.8496 in.
	(RR)	Limit	27.08 mm	1.0661 in.
	O/D direct clutch drum	Limit	27.11 mm	1.0673 in.
	O/D planetary gear	Limit	11.27 mm	0.4437 in.
	Direct clutch drum	Limit	53.99 mm	2.1256 in.
	Forward clutch drum	Limit	24.08 mm	0.9480 in.
	Front planetary ring gear	Limit	24.08 mm	0.9480 in.
	Planetary sun gear	Limit	27.08 mm	1.0661 in.
	Transmission case	Limit	38.19 mm	1.5035 in.
	Extension housing	Limit	40.09 mm	1.5783 in.
Flange thickness	O/D direct clutch (C_0)	No. 21	3.1 mm	0.122 in.
		No. 20	3.2 mm	0.126 in.
		No. 19	3.3 mm	0.130 in.
		No. 18	3.4 mm	0.134 in.
		No. 17	3.5 mm	0.138 in.
		No. 16	3.6 mm	0.142 in.
	Direct clutch (C_2)	No. 33	3.0 mm	0.118 in.
		No. 32	3.1 mm	0.122 in.
		No. 31	3.2 mm	0.126 in.
		No. 30	3.3 mm	0.130 in.
		No. 29	3.4 mm	0.134 in.
		No. 28	3.5 mm	0.138 in.
		No. 27	3.6 mm	0.142 in.
		No. 34	3.7 mm	0.146 in.
	O/D brake (B_0)	No. 26	3.3 mm	0.130 in.
		No. 25	3.5 mm	0.138 in.
		No. 12	3.6 mm	0.142 in.
		No. 24	3.7 mm	0.146 in.
		No. 11	3.8 mm	0.150 in.
		No. 23	3.9 mm	0.154 in.
		None	4.0 mm	0.157 in.
	First and Reverse Brake (B_3)	No. 50	5.0 mm	0.197 in.
		No. 51	4.8 mm	0.189 in.
		No. 52	4.6 mm	0.181 in.
		No. 53	4.4 mm	0.173 in.
		No. 54	4.2 mm	0.165 in.
		No. 55	4.0 mm	0.157 in.
Clutch piston stroke	O/D direct clutch (C_0)		1.85 – 2.15 mm	0.0738 – 0.0846 in.
	Direct clutch (C_2)		1.37 – 1.60 mm	0.0539 – 0.0630 in.
	Forward clutch (C_1)	7M-GE	3.42 – 3.93 mm	0.1346 – 0.1547 in.
		7M-GTE	3.73 – 4.59 mm	0.1469 – 0.1807 in.
Brake piston stroke	O/D brake (B_0)	7M-GE	1.40 – 1.70 mm	0.0551 – 0.0669 in.
		7M-GTE	1.75 – 2.05 mm	0.0689 – 0.0807 in.
	Second coast brake (B_1)		1.5 – 3.0 mm	0.059 – 0.118 in.
Brake pack clearance	Second brake (B_2)		0.62 – 1.98 mm	0.0244 – 0.0780 in.
	First and reverse brake (B_3)	7M-GE	0.60 – 1.12 mm	0.0236 – 0.0441 in.
		7M-GTE	0.70 – 1.22 mm	0.0276 – 0.0480 in.

Specifications (Cont'd)

		Free length mm (in.)	Coil outer diameter mm (in.)	Total No. of coils	Color
Valve body spring	(Upper valve body)				
	Down-shift plug	27.3 (1.075)	8.7 (0.343)	12.5	Yellow
	Throttle valve	20.6 (0.811)	9.2 (0.362)	9.5	Blue
		or 23.3 (0.917)	9.2 (0.362)	9.5	White
	3–4 shift valve	30.8 (1.213)	9.7 (0.382)	10.5	Purple
	Second coast modulator valve				
	7M-GE	25.3 (0.996)	8.6 (0.339)	11.5	Orange
	7M-GTE	29.6 (1.165)	8.3 (0.327)	12.5	Red
	Lock-up relay valve	21.4 (0.843)	5.5 (0.217)	17.5	Light Gray
	Secondary regulator valve	30.9 (1.217)	11.2 (0.441)	10.5	Blue
	Cut-back valve	21.8 (0.858)	6.0 (0.236)	13.5	None
	2–3 shift valve	30.8 (1.213)	9.7 (0.382)	10.5	Purple
	Low coast modulator valve	27.8 (1.094)	8.3 (0.327)	10.5	Pink
	(Lower valve body)				
	Check valve	20.2 (0.795)	12.1 (0.476)	6.5	None
	Pressure relief valve	11.2 (0.441)	6.4 (0.252)	7.5	None
	1–2 shift valve	30.8 (1.213)	9.7 (0.382)	10.5	Purple
	Primary regulator valve	66.7 (2.626)	18.6 (0.732)	12.5	None
	Accumulator control valve				
	7M-GE	36.1 (1.421)	8.9 (0.350)	14.0	White
	7M-GTE	34.6 (1.362)	8.8 (0.346)	18.0	Yellow
Output shaft thrust play		0.27 – 0.86 mm	0.0106 – 0.0339 in.		
Second coast brake piston rod length		71.4 mm	2.811 in.		
		72.9 mm	2.870 in.		

			Free length mm (in.)	Coil outer diameter mm (in.)	Color
Accumulator piston spring	B_2	Upper 7M-GE	73.4 (2.890)	19.9 (0.783)	Red
		Upper 7M-GTE	72.6 (2.858)	19.9 (0.783)	Light Gray
	C_2	Upper Inner	42.1 (1.657)	14.7 (0.579)	Pink
		Upper Outer 7M-GE	64.0 (2.520)	20.2 (0.795)	Green
		Upper Outer 7M-GTE	70.3 (2.768)	20.2 (0.795)	Pink
	B_0	Upper	62.0 (2.441)	16.0 (0.630)	Green
	C_0	Outer	74.6 (2.937)	20.9 (0.823)	Orange
		Inner	46.0 (1.811)	14.0 (0.551)	Yellow

Planetary pinion gear thrust clearance	O/D planetary gear	STD	0.20 – 0.60 mm	0.0079 – 0.0236 in.
		Max.	1.00 mm	0.0394 in.
	Front planetary gear	STD	0.20 – 0.60 mm	0.0079 – 0.0236 in.
		Max.	1.00 mm	0.0394 in.
	Rear planetary gear	STD	0.20 – 0.60 mm	0.0079 – 0.0236 in.
		Max.	1.00 mm	0.0394 in.

Torque Specifications

Part tightened		kg-cm	ft-lb	N·m
Engine x Transmission		650	47	64
Transmission housing x Transmission case	10 mm	345	25	34
	12 mm	580	42	57
Extension housing x Transmission case		370	27	36
Parking lock pawl bracket		75	65 in.-lb	7.4
O/D support x Transmission case		260	19	25
Oil pump x Transmission case		220	16	22
Oil pump body x Stator shaft		100	7	10
Valve body x Transmission case		100	7	10
Oil strainer		100	7	10
Oil pan		75	65 in.-lb	7.4
Speed sensor		160	12	16
Speedometer driven gear lock plate		160	12	16
Union		300	22	29
Cooler pipe union nut		350	25	34
Drive plate x Crankshaft		750	54	74
Torque converter x Drive plate		420	30	41
Neutral start switch	Bolt	130	9	13
	Nut	70	61 in.-lb	6.9
Control shaft lever		160	12	16

PROPELLER SHAFT

Specifications

Bearing axial play			0.05 mm	0.0020 in.
Runout		Limit	0.8 mm	0.031 in.
Snap ring thickness	Mark or color	1	2.10 – 2.15 mm	0.0827 – 0.0846 in.
		2	2.15 – 2.20 mm	0.0846 – 0.0866 in.
		3	2.20 – 2.25 mm	0.0866 – 0.0886 in.
		Brown	2.25 – 2.30 mm	0.0886 – 0.0906 in.
		Blue	2.30 – 2.35 mm	0.0906 – 0.0925 in.
		6	2.35 – 2.40 mm	0.0925 – 0.0945 in.
		7	2.40 – 2.45 mm	0.0945 – 0.0965 in.
		8	2.45 – 2.50 mm	0.0965 – 0.0984 in.

Torque Specifications

Part tightened		kg-cm	ft-lb	N·m
Propeller shaft x Differential		750	54	74
Intermediate shaft x Propeller shaft		750	54	74
Center support bearing x Body		500	36	49
Intermediate shaft x Center bearing x Joint flange				
	1st	1,850	134	181
	2nd	Loosen nut		
	3rd	700	51	69

FRONT AXLE AND SUSPENSION

Specifications

Cold tire inflation pressure	Tire size		Inflation pressure kg/cm² (psi, kPa)	
			Front	Rear
	225/50 VR 16		2.2 (32, 220)	2.2 (32, 220)
Front wheel alignment	Toe-in	Inspection STD	0 ± 2 mm (0 ± 0.08 in.)	
		Adjustment STD	0 ± 1 mm (0 ± 0.04 in.)	
	Camber	Inspection STD	–0°10′ ± 45′	
		Adjustment STD	–0°10′ ± 30′	
		Left-right error	30′	
	Steering axis inclination	Inspection STD	10°55′ ± 45′	
		Left-right error	30′	
	Caster	Inspection STD	7°40′ ± 45′	
		Adjustment STD	7°40′ ± 30′	
		Left-right error	30′	
	Side slip		Less than 3.0 mm/m (0.118 in./3.3 ft)	
	Wheel angle	Max. Inside wheel	34°30′ +1°30′ –2°00′	
		Max. Outside wheel	31°45′	
		at 20° (Outside wheel)	21°00′ (Inside wheel)	

Wheel lateral runout	Limit	1.2 mm	0.047 in.	
Tie rod end left-right error	Limit	1.5 mm	0.059 in.	
Hub bearing axial direction play	Limit	0.05 mm	0.0020 in.	
Shock absorber control rod starting torque	Limit	200 g-cm	0.17 in.-lb	0.02 N·m
Ball joint rotation condition	Upper ball joint	10 – 35 kg-cm	8.7 – 30.0 in.-lb	1.0 – 3.4 N·m
	Lower ball joint	0 – 5 kg-cm	0 – 4.3 in.-lb	0 – 0.5 N·m
Ball joint rotation condition	Upper ball joint	0 mm	0 in.	
	Lower ball joint	0.3 mm	0.012 in.	

Torque Specifications

Part tightened	kg-cm	ft-lb	N·m
Hub nut	1,050	76	103
Tie rod end clamp bolt	195	14	19
Front and rear adjusting cam bolt	2,450	177	240
Axle hub lock nut	2,030	147	199
Lower ball joint x Steering knuckle	1,270	92	125
Tie rod end x Steering knuckle	500	36	49
Steering knuckle x Upper suspension arm	1,050	76	103
Lower ball joint x Lower suspension arm	1,300	94	127
Brake hose bracket x Steering knuckle	195	14	19
Disc brake caliper x Steering knuckle	1,065	77	104
Speed sensor set bolt	195	14	19
Front shock absorber x Body	360	26	35
Front shock absorber x Lower suspension arm	1,460	106	143
Upper suspension arm mounting nut	1,670	121	164
Piston rod lock nut	300	22	29
Stabilizer link x Lower suspension arm	650	47	64
Stabilizer link x Stabilizer bar	650	47	64
Stabilizer bar bracket x Body	180	13	18

REAR AXLE AND SUSPENSION

Specifications

			Inspection STD	Adjustment STD
Rear wheel alignment				
	Camber		–45′ ± 45′	–45′ ± 30′
	Left-right error		30′	30′
	Toe-in		4 ± 2 mm (0.16 ± 0.08 in.)	4 ± 1 mm (0.16 ± 0.04 in.)
Rear axle hub	Bearing axial direction play	Limit	0.05 mm	0.0020 in.
	Axle shaft flange runout	Limit	0.05 mm	0.0020 in.
Drive shaft	Drive shaft length		551.8 – 554.8 mm	21.724 – 21.824 in.
Differential	Drive pinion bearing preload	at Starting		
		New bearing	10 – 16 kg-cm (8.7 – 13.9 in.-lb, 1.0 – 1.6 N·m)	
		Reused bearing	5 – 8 kg-cm (4.3 – 6.9 in.-lb, 0.5 – 0.8 N·m)	
	Total preload	at Starting	Add drive pinion bearing preload 4 – 6 kg-cm (3.5 – 5.2 in.-lb, 0.4 – 0.6 N·m)	
	Drive pinion to ring gear backlash		0.13 – 0.18 mm	0.0051 – 0.0071 in.
	Pinion gear to side gear backlash		0.05 – 0.20 mm	0.0020 – 0.0079 in.
	Ring gear runout	Limit	0.1 mm	0.004 in.
	Companion flange runout			
	Limit	Lateral runout	0.1 mm	0.004 in.
		Radial runout	0.1 mm	0.004 in.
	Ring gear installing temperature		90 – 110°C	194 – 230°F
	Drive pinion oil seal drive in depth		1.5 mm	0.059 in.
	Side gear oil seal drive in depth		Flash the carrier end surface	
	Side gear shaft runout	Max. limit	0.2 mm	0.008 in.
	Side gear thrust washer thickness			
	(Conventional 2 pinion type)		1.58 – 1.62 mm	0.0622 – 0.0638 in.
			1.68 – 1.72 mm	0.0661 – 0.0677 in.
			1.78 – 1.82 mm	0.0701 – 0.0717 in.
	(Conventional 4 pinion type)		0.9 mm	0.035 in.
			1.0 mm	0.039 in.
			1.1 mm	0.043 in.
			1.2 mm	0.047 in.
			1.3 mm	0.051 in.
	(LSD)		0.15 mm	0.0059 in.
			0.20 mm	0.0079 in.
			0.25 mm	0.0098 in.
			0.30 mm	0.0118 in.
			0.35 mm	0.0138 in.
	Drive pinion adjusting plate washer thickness		1.70 mm	0.0669 in.
			1.73 mm	0.0681 in.
			1.76 mm	0.0693 in.
			1.79 mm	0.0705 in.
			1.82 mm	0.0717 in.
			1.85 mm	0.0728 in.
			1.88 mm	0.0740 in.

Specifications (Cont'd)

Differential (cont'd)	Drive pinion adjusting plate washer thickness (cont'd)	1.91 mm	0.0752 in.
		1.94 mm	0.0764 in.
		1.97 mm	0.0776 in.
		2.00 mm	0.0787 in.
		2.03 mm	0.0799 in.
		2.06 mm	0.0811 in.
		2.09 mm	0.0823 in.
		2.12 mm	0.0835 in.
		2.15 mm	0.0846 in.
		2.18 mm	0.0858 in.
		2.21 mm	0.0870 in.
		2.24 mm	0.0882 in.
		2.27 mm	0.0894 in.
		2.30 mm	0.0906 in.
		2.33 mm	0.0917 in.
	Side bearing adjusting plate thickness	2.57 – 2.59 mm	0.1012 – 0.1020 in.
		2.60 – 2.62 mm	0.1024 – 0.1031 in.
		2.63 – 2.65 mm	0.1035 – 0.1043 in.
		2.66 – 2.68 mm	0.1047 – 0.1055 in.
		2.69 – 2.71 mm	0.1059 – 0.1067 in.
		2.72 – 2.74 mm	0.1071 – 0.1079 in.
		2.75 – 2.77 mm	0.1083 – 0.1091 in.
		2.78 – 2.80 mm	0.1094 – 0.1102 in.
		2.81 – 2.83 mm	0.1106 – 0.1114 in.
		2.84 – 2.86 mm	0.1118 – 0.1126 in.
		2.87 – 2.89 mm	0.1130 – 0.1138 in.
		2.90 – 2.92 mm	0.1142 – 0.1150 in.
		2.93 – 2.95 mm	0.1154 – 0.1161 in.
		2.96 – 2.98 mm	0.1165 – 0.1173 in.
		2.99 – 3.01 mm	0.1177 – 0.1185 in.
		3.02 – 3.04 mm	0.1189 – 0.1197 in.
		3.05 – 3.07 mm	0.1201 – 0.1209 in.
		3.08 – 3.10 mm	0.1213 – 0.1220 in.
		3.11 – 3.13 mm	0.1224 – 0.1232 in.
		3.14 – 3.16 mm	0.1236 – 0.1244 in.
		3.17 – 3.19 mm	0.1248 – 0.1256 in.
		3.20 – 3.22 mm	0.1260 – 0.1268 in.
		3.23 – 3.25 mm	0.1272 – 0.1280 in.
		3.26 – 3.28 mm	0.1283 – 0.1291 in.
		3.29 – 3.31 mm	0.1295 – 0.1303 in.
		3.32 – 3.34 mm	0.1307 – 0.1315 in.
		3.35 – 3.37 mm	0.1319 – 0.1327 in.
		3.38 – 3.40 mm	0.1331 – 0.1339 in.
		3.41 – 3.43 mm	0.1343 – 0.1350 in.
		3.44 – 3.46 mm	0.1354 – 0.1362 in.
		3.47 – 3.49 mm	0.1366 – 0.1374 in.

Specifications (Cont'd)

Rear suspension	No. 1 lower suspension arm boll joint turning torque	8.5–35.0 kg-cm	7–30 in.-lb	0.8–3.4 N·m
	Upper arm boll joint turning torque	10–35 kg-cm	9–30 in.-lb	1.0–3.4 N·m

Torque Specifications

	Part tightened		kg-cm	ft-lb	N·m
Axle hub and rear suspension	Axle carrier x Drive shaft		2,800	203	275
	Axle carrier x Shock absorber		1,400	101	137
	Axle carrier x Upper arm		1,100	80	108
	Axle carrier x No. 1 suspension arm		600	43	59
	Axle carrier x No. 2 suspension arm		1,670	121	164
	Axle carrier x Strut rod		1,670	121	164
	Axle carrier x Backing plate	Bolt	260	19	25
		Nut	600	43	59
	Axle carrier x Torque plate		475	34	47
	Body x Suspension support		145	10	14
	Shock absorber x Suspension support		280	20	27
	Body x Upper arm		1,670	121	164
	Body x No. 1 suspension arm		1,880	136	184
	Body x No. 2 suspension arm		1,880	136	184
	Body x Strut rod		1,670	121	164
	Body x Stabilizer bar bracket		290	21	28
	Stabilizer bar x Link		360	26	35
Drive shaft and differential	Drive shaft x Differential		700	51	69
	Body x Differential	Stud bolts	800	58	78
		Nuts	930	67	91
		Rear bolts	930	67	91
		Front bolts	1,690	122	166
	Carrier x Carrier cover		475	34	47
	Carrier x Drain plug		500	36	49
	Carrier x Filler plug		500	36	49
	Carrier x Side bearing cap		800	58	78
	Ring gear x Differential case		985	71	97
	Drive pinion x Companion flange		See page RA-39		
	Differential case (LH x RH)		480	35	47
	Companion flange x Propeller shaft		750	54	74

BRAKE SYSTEM

Specifications

Brake pedal	Pedal height (from asphalt sheet)		151.5 – 161.5 mm	5.96 – 6.36 in.
	Pedal freeplay		3 – 6 mm	0.12 – 0.24 in.
	Pedal reserve distance at 50 kg (110.2 lb, 490 N)		More than 80 mm (3.15 in.)	
Brake booster	Booster push rod to piston clearance w/SST		0 mm	0 in.
Front brake	Pad thickness	STD	10.0 mm	0.394 in.
		Limit	1.0 mm	0.039 in.
	Disc thickness	STD	22.0 mm	0.866 in.
		Limit	21.0 mm	0.827 in.
	Disc runout	Limit	0.13 mm	0.0051 in.
Rear brake	Pad thickness	STD	10.0 mm	0.394 in.
		Limit	1.0 mm	0.039 in.
	Disc thickness	STD	18.0 mm	0.709 in.
		Limit	17.0 mm	0.669 in.
	Disc runout	Limit	0.13 mm	0.0051 in.
Parking brake	Lining thickness	STD	2.5 mm	0.098 in.
		Limit	1.0 mm	0.039 in.
	Rear drum inner diameter	STD	190 mm	7.48 in.
		Limit	191 mm	7.51 in.
	Lever travel at 20 kg (44.1 lb, 196 N)		5 – 8 clicks	
	Clearance between rear shoe and lever		0 – 0.35 mm	0 – 0.0138 in.
	Parking brake shoe lever shim thickness		0.3 mm	0.012 in.
			0.6 mm	0.024 in.
			0.9 mm	0.035 in.

Torque Specifications

Part tightened		kg-cm	ft-lb	N·m
Bleeder plug		85	74 in.-lb	8
Master cylinder x Piston stopper bolt		100	7	10
Master cylinder x Reservoir		17.5	15.2 in.-lb	1.7
Master cylinder x Brake booster		130	9	13
Brake tube union nut		155	11	15
Brake booster clevis lock nut		260	19	25
Brake booster x Pedal bracket		130	9	13
Front disc brake cylinder x Torque plate		370	27	36
Front disc brake hose bracket		195	14	19
Front disc brake torque plate x Steering knuckle		1,065	77	104
Front disc brake cylinder x Flexible hose		310	22	30
Front disc brake dust cover x Steering knuckle		195	14	19
Rear disc brake cylinder x Torque plate		200	14	20
Rear disc brake torque plate x Rear axle carrier		475	34	47
Rear disc brake cylinder x Flexible hose		235	17	23
Rear disc brake backing plate x Rear axle carrier	Nut	600	43	59
	Bolt	260	19	25

Torque Specifications (Cont'd)

Part tightened		kg-cm	ft-lb	N·m
Parking brake shoe guide plate set bolt		185	13	18
Brake actuator x Actuator bracket		55	48 in.-lb	5.4
Front speed sensor installation bolt		195	14	19
Rear speed sensor installation bolt	A340E, R154	160	12	16
	W58	290	21	28

STEERING

Specifications

Steering	Steering wheel freeplay		30 mm (1.18 in.) or less	
Tilt and telescopic steering	No. 1 collar outer diameter		17.989 – 17.996 mm	0.7082 – 0.7085 in.
			17.996 – 18.003 mm	0.7085 – 0.7088 in.
			18.003 – 18.010 mm	0.7088 – 0.7091 in.
			18.010 – 18.017 mm	0.7091 – 0.7093 in.
			18.017 – 18.024 mm	0.7093 – 0.7096 in.
	No. 2 collar outer diameter		17.989 – 17.996 mm	0.7082 – 0.7085 in.
			17.996 – 18.003 mm	0.7085 – 0.7088 in.
			18.003 – 18.010 mm	0.7088 – 0.7091 in.
			18.010 – 18.017 mm	0.7091 – 0.7093 in.
			18.017 – 18.024 mm	0.7093 – 0.7096 in.
	Support shim thickness	Mark		
		None	0.197 – 0.203 mm	0.0078 – 0.0080 in.
		5	0.495 – 0.505 mm	0.0195 – 0.0199 in.
		8	0.795 – 0.805 mm	0.0313 – 0.0317 in.
		14	1.395 – 1.405 mm	0.0549 – 0.0533 in.
		18	1.795 – 1.805 mm	0.0707 – 0.0711 in.
Power steering	Drive belt tension	New belt	160 ± 20 lb	
		Used belt	100 ± 20 lb	
	Maximum rise of oil level		Below 5 mm (0.20 in.)	
	Oil pressure at Idle speed		75 – 80 kg/cm^2 (1,067 – 1,138 psi, 7,355 – 7,845 kPa)	
	Steering effort			
	USA	w/o PPS	4.7 kg (10.36 lb, 46 N) or less	
		w/ PPS	2.7 kg (5.95 lb, 26 N) or less	
	CANADA	w/o PPS	70 kg-cm (61 in.-lb, 6.9 N·m) or less	
		w/ PPS	40 kg-cm (34 in.-lb, 3.9 N·m) or less	
	Rotor shaft bushing oil clearance	STD	0.01 – 0.03 mm	0.0004 – 0.0012 in.
		Maximum	0.07 mm	0.0028 in.
	Vane plate to rotor groove clearance		0.03 mm	0.0012 in.
	Vane plate Minimum height		8.1 mm	0.319 in.
	Minimum thickness		1.797 mm	0.0707 in.
	Minimum length		14.988 mm	0.5901 in.

Specifications (Cont'd)

Power steering (cont'd)	Vane plate length	Rotor and cam ring mark		
		None	14.996 – 14.998 mm	0.5904 – 0.5905 in.
		1	14.994 – 14.996 mm	0.5903 – 0.5904 in.
		2	14.992 – 14.994 mm	0.5902 – 0.5903 in.
		3	14.990 – 14.992 mm	0.59016 – 0.59024 in.
		4	14.988 – 14.990 mm	0.5901 – 0.5902 in.
	Flow control valve spring length	STD	39 mm	1.54 in.
		Minimum	37 mm	1.46 in.
	Pump rotating torque		2.8 kg-cm (2.4 in.-lb, 0.3 N·m) or less	
	Steering rack runout	Maximum	0.3 mm	0.012 in.
	Bearing preload (w/o PPS)		4.5 – 6.5 kg-cm (3.9 – 5.6 in.-lb, 0.4 – 0.6 N·m)	
	Total preload		9 – 12 kg-cm (7.8 – 10.4 in.-lb, 0.9 – 1.2 N·m)	

Torque Specifications

	Part tightened	kg-cm	ft-lb	N·m
Tilt steering and telescopic steering	Support stopper bolt	110	8	11
	Tilt lever retainer	195	14	19
	Tilt lever retainer x Breakaway bracket (USA)	80	69 in.-lb	7.8
	No. 1 tilt sub lever bolt	80	69 in.-lb	7.8
	Column tube x Breakaway bracket	195	14	19
	Retainer Bracket x Column tube	280	20	27
	Main shaft x Intermediate shaft	260	19	25
	Column tube stopper bolt	80	69 in.-lb	7.8
	Telescopic lever x Telescopic lever bolt	145	10	14
	Breakaway bracket x Body	260	19	25
	Intermediate shaft x Universal joint	330	24	32
	Universal joint x Control valve shaft	330	24	32
	Steering wheel x Main shaft	350	25	34
	Column hole cover x Hole cover plate	130	9	13
	Column hole cover x Body	55	48 in.-lb	5.4
	Steering wheel pad (USA)	75	65 in.-lb	7.4
Power steering	Pressure port union x Pump housing	700	51	69
	Suction port union x Pump housing	130	9	13
	Air control valve x Pump housing	370	27	36
	PS pump pulley x Rotor shaft	440	32	43
	Front housing x Rear housing	470	34	46
	Drive belt adjust stay bolt 12 mm bolt	185	13	18
	14 mm bolt	420	30	41
	PS pump x Pressure tube	500	36	49
	PS pump x Bracket	590	43	58
	PS pump x Adjust bracket	375	27	37
	Reservoir tank installation bolt (7M-GTE)			
	Nut	190	14	19
	Bolt	130	9	13
	Adjusting strut (7M-GTE) Nut	190	14	19
	Bolt	400	29	39

Torque Specifications (Cont'd)

	Part tightened	kg-cm	ft-lb	N·m
Power steering (cont'd)	Pressure control valve x			
	Control valve housing (w/ PPS)	185	13	18
	Control valve housing x Rack housing			
	w/o PPS	315	23	31
	w/ PPS	185	13	18
	Control valve self-locking nut (w/ PPS)	600	43	59
	Rack housing cap (w/ PPS)	700	51	69
	Bearing guide lock nut (w/o PPS)	570	41	56
	Rack guide spring cap lock nut	570	41	56
	Rack x Rack end	940	68	92
	Turn pressure tube x Gear housing			
	Valve housing (w/o PPS)	200	14	20
	(w/ PPS)	350	25	34
	Rack housing	240	17	24
	Gear housing x Body	770	56	76
	Gear housing x Return line w/o PPS	450	33	44
	w/ PPS	525	38	51
	Gear housing x Pressure line w/o PPS	500	36	49
	w/ PPS	525	38	51
	Tie rod end x Steering knuckle	500	36	49
	Control valve shaft x Universal joint	330	24	32
	Tie rod end clamp bolt	195	14	19

SRS AIRBAG

Specifications

	Terminal	
Front airbag sensor resistance	⊖S – ⊖A	755 – 885 Ω
	⊕S – ⊖S	∞
	⊕S – ⊕A	Less than 1 Ω

Torque Specifications

Part tightened	kg-cm	ft-lb	N·m
Steering wheel	350	25	34
Steering wheel pad	75	65 in.-lb	7.4
Front airbag sensor	260	19	25
Center airbag sensor assembly	130	9	13

BODY

Torque Specifications

Part tightened	kg·cm	ft·lb	N·m
SEAT			
Front Seat			
Seat back x Seat adjuster	185	13	18
Seat cushion x Seat adjuster	185	13	18
Seat adjuster x Body	375	27	37
Rear Seat			
Seat back lock x Seat back	175	13	17
Seat back lock striker x Body	175	13	17
Seat center hinge x Seat back	80	69 in.-lb	7.8
Seat center hinge x Body	80	69 in.-lb	7.8
Seat back hinge x Seat back	240	17	24
Seat back hinge x Body	80	69 in.-lb	7.8
SEAT BELT			
Front Seat Belt			
ELR x Body	440	32	43
Outer belt shoulder anchor x Body	440	32	43
Outer belt lower anchor x Body	440	32	43
Inner belt x Bracket	440	32	43
Bracket x Seat cushion	195	14	19
Anchor plate x Body	440	32	43
Rear Seat Belt			
ELR x Body	440	32	43
Outer belt shoulder anchor x Body	440	32	43
Outer belt lower anchor x Body	440	32	43
Inner belt x Body	440	32	43

LUBRICANT

Item		Capacity			Classification
		Liters	US qts	Imp. qts	
Engine oil (7M-GE) Dry fill Drain and refill w/ Oil filter change w/o Oil filter change (7M-GTE) Dry fill Drain and refill w/ Oil filter change w/o Oil filter change		 4.9 4.4 4.1 5.1 4.4 4.1	 5.2 4.7 4.3 5.4 4.7 4.3	 4.3 3.9 3.6 4.5 3.9 3.6	API grade SF or SF/CC, multigrade viscosity oil
Manual transmission oil	W58	2.4	2.5	2.1	API GL-4 or GL-5 SAE 75W-90 or 80W-90
	R154	3.0	3.2	2.6	API GL-4 or GL-5 SAE 75W-90
Automatic transmission fluid Dry fill Drain and refill		 7.2 1.6	 7.6 1.7	 6.3 1.4	ATF DEXRON® II
Differential oil		1.3	1.4	1.1	API GL-5 hypoid gear oil w/LSD Use LSD oil only Above −18°C (0°F) SAE 90 Below −18°C (0°F) SAE 80W-90 or 80W
Power steering fluid Total		1,000 cc		61.0 cu in.	ATF DEXRON® II
Brake fluid		–			SAE J1703 or FMVSS No. 116, DOT3
Antifreeze		–			Anti-rust type ethylene-glycol base coolant

STANDARD BOLT TORQUE SPECIFICATIONS

Page

STANDARD BOLT TORQUE SPECIFICATIONS B-2

STANDARD BOLT TORQUE SPECIFICATIONS

HOW TO DETERMINE BOLT STRENGTH

	Mark	Class
Hexagon head bolt	Bolt head No. 4 — 4T; 5 — 5T; 6 — 6T; 7 — 7T; 8 — 8T; 9 — 9T; 10 — 10T; 11 — 11T	
	No mark	4T
Hexagon flange bolt w/ washer hexagon bolt	No mark	4T
Hexagon head bolt	Two protruding lines	5T
Hexagon flange bolt w/ washer hexagon bolt	Two protruding lines	6T
Hexagon head bolt	Three protruding lines	7T
Hexagon head bolt	Four protruding lines	8T

	Mark	Class
Stud bolt	No mark	4T
	Grooved	6T
Welded bolt		4T

SPECIFIED TORQUE FOR STANDARD BOLTS

Class	Diameter mm	Pitch mm	Specified torque					
			Hexagon head bolt			Hexagon flange bolt		
			kg-cm	ft-lb	N·m	kg-cm	ft-lb	N·m
4T	6	1	55	48 in.-lb	5	60	52 in.-lb	6
	8	1.25	130	9	12.5	145	10	14
	10	1.25	260	19	26	290	21	29
	12	1.25	480	35	47	540	39	53
	14	1.5	760	55	74	850	61	84
	16	1.5	1,150	83	115	—	—	—
5T	6	1	65	56 in.-lb	6.5	75	65 in.-lb	7.5
	8	1.25	160	12	15.5	175	13	17.5
	10	1.25	330	24	32	360	26	36
	12	1.25	600	43	59	670	48	65
	14	1.5	930	67	91	1,050	76	100
	16	1.5	1,400	101	140	—	—	—
6T	6	1	80	69 in.-lb	8	90	78 in.-lb	9
	8	1.25	195	14	19	210	15	21
	10	1.25	400	29	39	440	32	44
	12	1.25	730	53	71	810	59	80
	14	1.5	1,100	80	110	1,250	90	125
	16	1.5	1,750	127	170	—	—	—
7T	6	1	110	8	10.5	120	9	12
	8	1.25	260	19	25	290	21	28
	10	1.25	530	38	52	590	43	58
	12	1.25	970	70	95	1,050	76	105
	14	1.5	1,500	108	145	1,700	123	165
	16	1.5	2,300	166	230	—	—	—
8T	8	1.25	300	22	29	330	24	33
	10	1.25	620	45	61	690	50	68
	12	1.25	1,100	80	110	1,250	90	120
9T	8	1.25	340	25	34	380	27	37
	10	1.25	710	51	70	790	57	78
	12	1.25	1,300	94	125	1,450	105	140
10T	8	1.25	390	28	38	430	31	42
	10	1.25	800	58	78	890	64	88
	12	1.25	1,450	105	140	1,600	116	155
11T	8	1.25	430	31	42	480	35	47
	10	1.25	890	64	87	990	72	97
	12	1.25	1,600	116	155	1,800	130	175

SST AND SSM

	Page
SST (SPECIAL SERVICE TOOLS)	C-2
SSM (SPECIAL SERVICE MATERIALS)	C-18

SST (SPECIAL SERVICE TOOLS)

Section / Part Name / Part No. / Illustration		EM	TC	FI	CO	LU	ST	CH	CL	MT	AT	PR	FA	RA	BR	SR	AB	BE	BO
09032-00100	Oil Pan Seal Cutter					●					●								
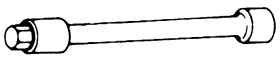 09043-38100	Hexagon 10 mm Wrench	●																	
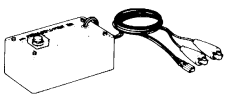 09082-00700	SRS Airbag Deployment Tool																●		
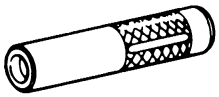 09201-41020	Valve Stem Oil Seal Replacer	●					*1 ●												
09201-60011	Valve Guide Bushing Remover & Replacer									*2 ●	*2 ●								
09201-70010	Valve Guide Bushing Remover & Replacer	●																	
09202-70010	Valve Spring Compressor	●																	
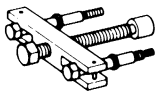 09213-31021	Crankshaft Pulley Puller	●								*3 ●						*4 ●	*5 ●		
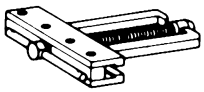 09213-36020	Timing Gear Remover									*6 ●			*7 ●						
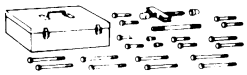 09213-60017	Crankshaft Pulley & Gear Puller Set	●																	
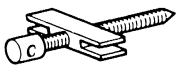 (09213-00020)	(Body with Bolt)	●																	
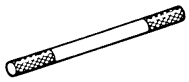 (09213-00030)	(Handle)	●																	

Remarks:
*1 Armature front bearing
*2 Speedometer driven gear oil seal
*3 No. 5 gear spline piece (R154 only)
*4 USA/Steering wheel
*5 Steering wheel
*6 Counter rear bearing and 5th gear (W58 only)
*7 Axle hub

SST (SPECIAL SERVICE TOOLS) (Cont'd)

Section / Part Name / Part No. / Illustration		EM	TC	FI	CO	LU	ST	CH	CL	MT	AT	PR	FA	RA	BR	SR	AB	BE	BO
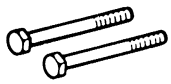 (09213-00050)	(Bolt Set)	●																	
09213-70010	Crankshaft Pulley Holding Tool	●																	
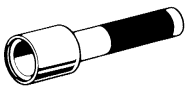 09214-41010	Crankshaft Damper & Gear Replacer	*1 ●																	
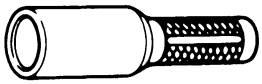 09214-60010	Crankshaft Pulley & Gear Replacer	*2 ●																	
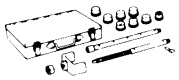 09215-00100	Camshaft Bearing Remover & Replacer Set "A"	●																	
(09215-00120)	(Gate "A")	●																	
(09215-00130)	(Bolt)	●																	
(09215-00140)	(Nut)	●																	
(09215-00160)	(Pin)	●																	
(09215-00210)	(Remover & Replacer)	●																	
(09215-00220)	(Remover & Replacer)	●																	
09218-56020	Cylinder Liner Remover & Replacer													*3 ●					

Remarks:
*1 Oil pump drive shaft oil seal
*2 Crankshaft front oil seal
*3 Axle carrier dust cover

SST (SPECIAL SERVICE TOOLS) (Cont'd)

Section / Part Name / Part No. / Illustration		EM	TC	FI	CO	LU	ST	CH	CL	MT	AT	PR	FA	RA	BR	SR	AB	BE	BO
09222-30010	Connecting Rod Bushing Remover & Replacer	●																	
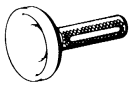 09223-15010	Crankshaft Rear Oil Seal Replacer													*1 ●					
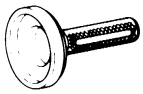 09223-41020	Crankshaft Rear Oil Seal Replacer	●																	
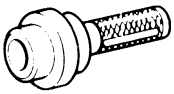 09223-50010	Crankshaft Front Oil Seal Replacer	●																	
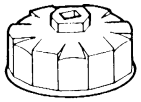 09228-07500	Oil Filter Wrench					●													
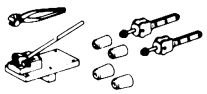 09230-00010	Radiator Service Tool Set				●														
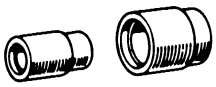 09238-47012	Water Pump Bearing Remover & Replacer									*2 ●									
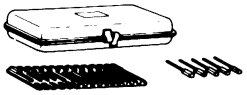 09240-00020	Wire Gauge Set										●								
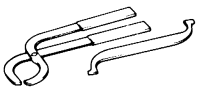 09248-55010	Valve Clearance Adjust Tool Set	●																	
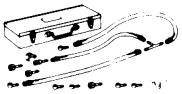 09268-41045	Injection Measuring Tool Set			●															
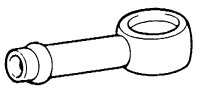 (09268-41080)	(No. 6 Union)			●															
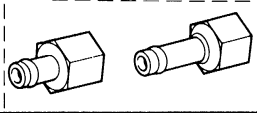 (09268-52010)	(Injection Measuring Attachment)			●															

Remarks:
*1 Axle carrier oil seal (Inside)
*2 No. 3 clutch hub shifting key retainer (W58 only)

SST (SPECIAL SERVICE TOOLS) (Cont'd)

Section / Part Name / Part No. / Illustration			EM	TC	FI	CO	LU	ST	CH	CL	MT	AT	PR	FA	RA	BR	SR	AB	BE	BO
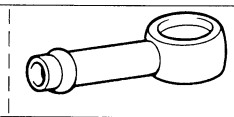	(90405-09015)	(No. 1 Union)			●															
	09268-45012	EFI Fuel Pressure Gauge			●															
	09278-54012	Drive Shaft Holding Tool	*1 ●														*2 ●			
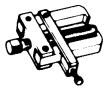	09286-46011	Injection Pump Spline Shaft Puller						*3 ●	*4 ●											
	09301-20020	Clutch Guide Tool								●										
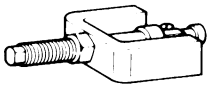	09303-35011	Input Shaft Front Bearing Puller								●										
	09304-30012	Input Shaft Front Bearing Replacer								●										
	09308-00010	Oil Seal Puller									*5 ●	●			●					
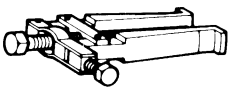	09308-10010	Oil Seal Puller									*5 ●	●			●					
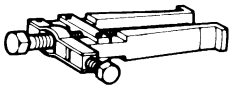	09308-55010	Oil Seal Puller	●																	
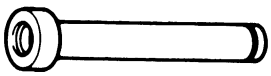	09309-35010	Transmission Rear Bearing Replacer									*6 ●									
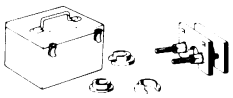	09312-20011	Transmission Gear Remover & Replacer									*5 ●									

Remarks:
*1 Camshaft timing pulley
*2 PS pump pulley
*3 Armature bearing
*4 Rectifier end frame
*5 W58 only
*6 R154 only

SST (SPECIAL SERVICE TOOLS) (Cont'd)

Section / Part Name / Part No. / Illustration		EM	TC	FI	CO	LU	ST	CH	CL	MT	AT	PR	FA	RA	BR	SR	AB	BE	BO
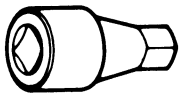 09313-30021	Detent Ball Plug Socket									*1 ●						*2 ●			
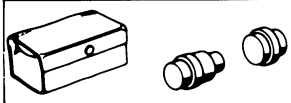 09315-00010	Clutch Release Bearing Remover & Replacer								*3 ●										
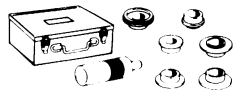 09316-60010	Transmission & Transfer Bearing Replacer									●				●					
(09316-00010)	(Replacer Pipe)									*1 ●				*4 ●					
(09316-00030)	(Replacer "B")									*5 ●									
(09316-00070)	(Replacer "F")									*1 ●									
09325-20010	Transmission Oil Plug									*1 ●		*1 ●							
09325-40010	Transmission Oil Plug									*5 ●	●	*6 ●							
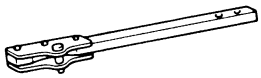 09330-00021	Companion Flange Holding Tool	*7 ●										●		●					
09332-25010	Universal Joint Bearing Remover & Replacer											●							
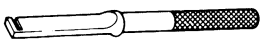 09333-00013	Clutch Diaphragm Spring Aligner								●										
09350-30020	TOYOTA Automatic Transmission Tool Set										●								

Remarks:
*1 W58 only
*2 Pressure control valve (w/ PPS)
*3 7M-GE only
*4 Differential carrier side bearing
*5 R154 only
*6 A/T and R154 M/T
*7 Crankshaft oil seal

SST (SPECIAL SERVICE TOOLS) (Cont'd)

Section / Part Name / Part No. / Illustration			EM	TC	FI	CO	LU	ST	CH	CL	MT	AT	PR	FA	RA	BR	SR	AB	BE	BO
	(09350-06120)	(No. 2 Measure Terminal)										●								
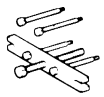	(09350-07020)	(Oil Pump Puller)										●								
	(09350-07030)	(No. 1 Piston Spring Compressor)										●								
	(09350-07040)	(No. 2 Piston Spring Compressor)										●								
	(09350-07050)	(No. 3 Piston Spring Compressor)										●								
	(09350-07060)	(No. 1 Snap Ring Expander)										●								
	(09350-07070)	(No. 2 Snap Ring Expander)										●								
	(09350-07080)	(Brake Reaction Sleeve Puller)										●								
	(09350-07090)	(Brake No. 1 Piston Puller)										●								
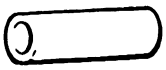	(09350-07110)	(Oil Seal Replacer)										●								
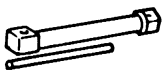	(09351-32010)	(One-way Clutch Test Tool)										●								
	(09351-32020)	(Stator Stopper)										●								

SST (SPECIAL SERVICE TOOLS) (Cont'd)

Section / Part Name / Part No. / Illustration		EM	TC	FI	CO	LU	ST	CH	CL	MT	AT	PR	FA	RA	BR	SR	AB	BE	BO
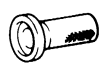 (09351-32140)	(Oil Seal Replacer)										●								
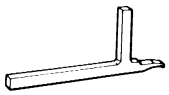 09504-22011	Differential Side Washer Remover & Replacer													●					
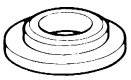 09506-30012	Differential Drive Pinion Bearing Cone Replacer									*1 ●				●					
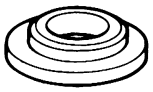 09506-35010	Differential Drive Pinion Rear Bearing Replacer	*2 ●								*3 ●									
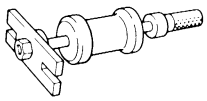 09520-24010	Differential Side Gear Shaft Puller													●					
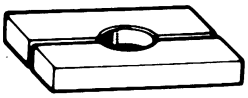 09527-20011	Rear Axle Shaft Bearing Remover													*4 ●					
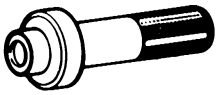 09554-30011	Differential Oil Seal Replacer													●					
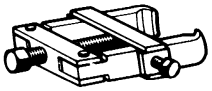 09556-22010	Drive Pinion Front Bearing Remover													●					
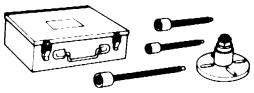 09557-22022	Companion Flange Remover & Replacer											●		●					
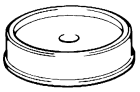 09608-10010	Steering Knuckle Oil Seal Replacer													*5 ●					
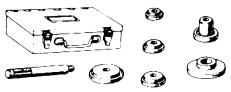 09608-12010	Front Hub & Drive Pinion Bearing Replacer Set									●									
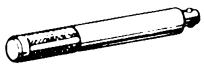 (09608-00020)	(Remover & Replacer Handle)									*6 ●									

Remarks:
- *1 Output shaft center bearing (W58 only)
- *2 Crankshaft front oil seal
- *3 Input shaft bearing (W58, R154)
  No. 2 hub sleeve assembly (R154 only)
- *4 Lower control arm bushing
- *5 Differential side gear shaft oil seal
- *6 Output shaft rear bearing outer race (W58)
  Counter rear bearing (R154)

SST (SPECIAL SERVICE TOOLS) (Cont'd)

Section / Part Name / Part No. / Illustration		EM	TC	FI	CO	LU	ST	CH	CL	MT	AT	PR	FA	RA	BR	SR	AB	BE	BO
(09608-00050)	(Drive Pinion Front Bearing Cup Replacer)									*1 ●									
09608-20012	Front Hub & Drive Pinion Bearing Tool Set							●		●									
(09608-00030)	(Replacer)							*2 ●											
(09608-00080)	(Replacer)									*3 ●									
(09608-03020)	(Handle)									*3 ●									
09608-30012	Front Hub & Drive Pinion Bearing Tool Set													●					
(09608-04060)	(Front Hub Outer Bearing Cup Replacer)													*4 ●					
09608-32010	Steering Knuckle Oil Seal Replacer												*5 ●	●					
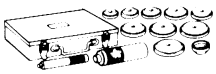 09608-35014	Axle Hub & Drive Pinion Bearing Tool Set									●			●	●					
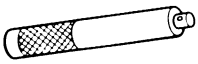 (09608-06020)	(Handle)									*6 ●			●	*7 ●					
(09608-06090)	(Front Hub Outer & Steering Worm Bearing Replacer)									*6 ●									
(09608-06100)	(Front Hub Outer Replacer)									*8 ●			●	●					

Remarks:

*1 Output shaft rear bearing outer race (W58)
Counter rear bearing (R154)
*2 Rotor front bearing
*3 Front bearing retainer oil seal (W58 only)
*4 Differential carrier side bearing
*5 Hub bearing
*6 Front bearing retainer oil seal (R154 only)
*7 Differential side gear shaft oil seal
*8 Counter gear center bearing outer race and output shaft rear bearing outer race (W58 only)

SST (SPECIAL SERVICE TOOLS) (Cont'd)

Section / Part Name / Part No. / Illustration			EM	TC	FI	CO	LU	ST	CH	CL	MT	AT	PR	FA	RA	BR	SR	AB	BE	BO
	(09608-06110)	(Front Hub Inner & Drive Pinion Front Bearing Cup Replacer)													●					
	(09608-06120)	(Front Hub Outer Bearing Cup Replacer)												●						
	(09608-06180)	(Drive Pinion Rear Bearing Cup Replacer)													●					
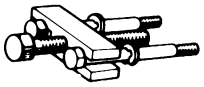	09609-20011	Steering Wheel Puller															*1 ●			
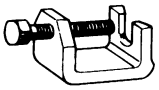	09611-12010	Tie Rod End Puller															●			
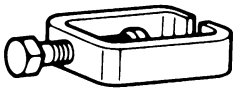	09611-22012	Tie Rod End Puller													*2 ●					
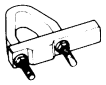	09612-00012	Rack & Pinion Steering Rack Housing Stand															●			
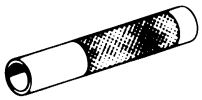	09612-22011	Tilt Handle Bearing Replacer															*3 ●			
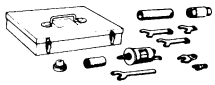	09612-24014	Steering Gear Housing Overhaul Tool Set															●			
	(09612-10022)	(Hexagon Wrench)															●			
	(09612-10061)	(Steering Pinion Bearing Replacer)															*3 ●			
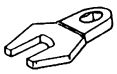	(09617-24011)	(Steering Rack Wrench)															●			

Remarks:
*1 Canada
*2 No. 1 lower suspension arm
*3 Cylinder end stopper (w/o PPS)

SST (SPECIAL SERVICE TOOLS) (Cont'd)

Section / Part Name / Part No. / Illustration		EM	TC	FI	CO	LU	ST	CH	CL	MT	AT	PR	FA	RA	BR	SR	AB	BE	BO
(09617-24020) (Steering Pinion Bearing Adjusting Screw Lock Nut Wrench)																●			
09612-30012	Steering Worm Bearing Puller															*1 ●			
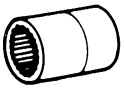 09616-00010	Steering Worm Bearing Adjusting Socket															●			
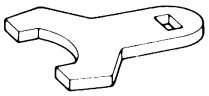 09617-14010	Steering Rack End Wrench															●			
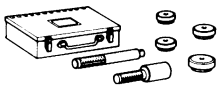 09620-30010	Steering Gear Box Replacer Set															●			
(09624-30010) (Steering Sector Shaft Oil Seal Replacer)																*2 ●			
(09626-30010) (Steering Worm Front Bearing Replacer)																*3 ●			
(09627-30010) (Steering Sector Shaft Bushing Replacer)																*4 ●			
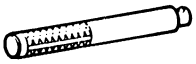 (09631-00020) (Handle)																*5 ●			
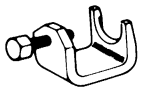 09628-10011	Ball Joint Puller												●						
09628-62011	Ball Joint Puller												●						
09630-24013	Steering Rack Oil Seal Tool Set															●			

Remarks:
*1 Rack housing bearing and oil seal (w/ PPS)
*2 Rack housing oil seal (w/ PPS)
*3 Rack housing bearing (w/ PPS)
*4 Cylinder end stopper (w/ PPS)
*5 w/ PPS

SST (SPECIAL SERVICE TOOLS) (Cont'd)

Section / Part Name / Part No. / Illustration		EM	TC	FI	CO	LU	ST	CH	CL	MT	AT	PR	FA	RA	BR	SR	AB	BE	BO
(09620-24010)	(Valve Cup Oil Seal Remover)															●			
(09620-24020)	(Valve Cup Oil Seal Replacer)															●			
(09620-24030)	(Valve Cup Bearing Replacer)															●			
(09620-24040)	(Seal Ring Guide)															*1 ●			
(09620-24050)	(Seal Ring Tool)															*1 ●			
(09631-24020)	(Piston Ring Guide)															*1 ●			
(09631-24030)	(Piston Ring Tool)															*1 ●			
(09631-24070)	(Oil Seal Replacer)															*1 ●			
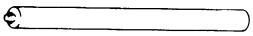 09631-12020	Handle															●			
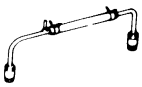 09631-12070	Steering Rack Oil Seal Test Tool															●			
09631-20031	Oil Seal "B" Remover															●			
09631-20070	Seal Ring Guide															*2 ●			

Remarks:
*1 w/o PPS
*2 w/ PPS

SST (SPECIAL SERVICE TOOLS) (Cont'd)

Section / Part Name / Part No. / Illustration		EM	TC	FI	CO	LU	ST	CH	CL	MT	AT	PR	FA	RA	BR	SR	AB	BE	BO
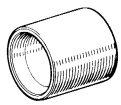 **09631-20081**	Seal Ring Tool															*1 ●			
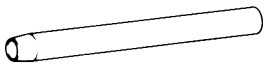 **09631-20102**	Steering Rack "H" Cover															●			
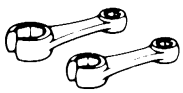 **09631-22020**	Power Steering Hose Nut 14 x 17 mm Wrench Set			*2 ●												●			
09631-22070	Oil Seal Replacer															*3 ●			
09631-32010	Oil Seal Replacer															*1 ●			
90631-32020	Seal Ring Tool															*1 ●			
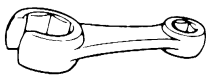 **09633-00020**	Power Steering Hose Nut Wrench															●			
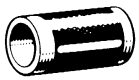 **09636-20010**	Upper Ball Joint Dust Cover Replacer												*4 ●						
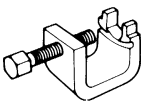 **09650-17011**	Hub Bolt Remover												●	●					
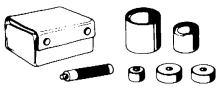 **09710-14012**	Rear Suspension Bushing Tool Set													●					
(09710-00030)	(Replacer)													*5 ●					
(09710-00050)	(Handle)													*5 ●					

Remarks:
*1 w/ PPS
*2 Fuel line flare nut
*3 w/o PPS
*4 Axle hub
*5 Lower control arm bushing

SST (SPECIAL SERVICE TOOLS) (Cont'd)

Section / Part Name / Part No. / Illustration		EM	TC	FI	CO	LU	ST	CH	CL	MT	AT	PR	FA	RA	BR	SR	AB	BE	BO
09710-22020	Front Suspension Bushing Tool Set													●					
(09710-01020)	(Handle)													*1 ●					
(09710-01030)	(Upper Arm Bushing Replacer)													*1 ●					
(09710-01040)	(Upper Arm Bushing Sleeve)													*1 ●					
(09710-01050)	(Lower Arm Bushing Remover)													*1 ●					
(09710-01060)	(Lower Arm Bushing Spacer)													*1 ●					
(09710-01070)	(Lower Arm Bushing Removing Sleeve)													*1 ●					
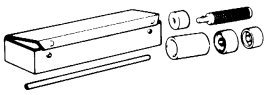 09710-22041	Rear Suspension Bushing Tool Set													●					
(09710-02020)	(Handle)													●					
(09710-02040)	(Remover)													●					
(09710-02050)	(Base)													●					
09710-30020	Suspension Bushing Tool Set												●	●					

Remark:
*1 Shock absorber

SST (SPECIAL SERVICE TOOLS) (Cont'd)

Section / Part Name / Part No. / Illustration		EM	TC	FI	CO	LU	ST	CH	CL	MT	AT	PR	FA	RA	BR	SR	AB	BE	BO
(09710-03020)	(Handle)												●						
(09710-03040)	Front Suspension Upper Arm Bushing Removing Base													*1 ●					
(09710-03050)	Front Suspension Upper Arm Bushing Replacer												●						
(09710-03070)	Front Suspension Lower Arm Bushing Remover													*1 ●					
(09710-03080)	Front Suspension Lower Arm Bushing Removing Spacer												●						
(09710-03100)	Front Suspension Lower Arm Bushing Replacer													*1 ●					
(09710-03130)	Lateral Rod Bushing Remover												●						
09717-20010	Brake Shoe Return Spring Remover														●				
09718-20010	Brake Shoe Return Spring Replacer														●				
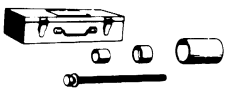 09726-35010	Front Lower Arm Bushing Remover & Replacer													*2 ●					
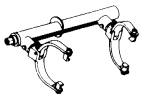 09727-30020	Coil Spring Compressor												●	●					
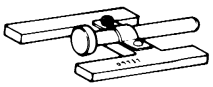 09737-00010	Brake Booster Push Rod Gauge														●				

Remarks:
*1 Lower ball bushing
*2 No. 1 lower arm bushing

SST (SPECIAL SERVICE TOOLS) (Cont'd)

Section / Part Name / Part No. / Illustration			EM	TC	FI	CO	LU	ST	CH	CL	MT	AT	PR	FA	RA	BR	SR	AB	BE	BO
	09751-36011	Brake Tube Union Nut 10 x 12 mm Wrench								●						●				
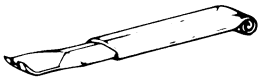	09806-30010	Windshield Moulding Remover																		●
	09812-00010	Door Hinge Set Bolt Wrench																		●
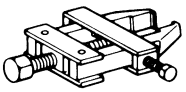	09820-00021	Alternator Rear Bearing Puller							●											
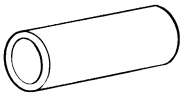	09820-00030	Alternator Rear Bearing Replacer							●											
	09820-63010	Alternator Pulley Set Nut Wrench Set							●											
	09842-30050	Wiring "A" EFI Inspection			●															
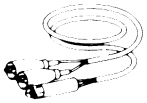	09842-30060	Wiring "E" EFI Inspection			*1 ●															
	09842-30070	Wiring "F" EFI Inspection			*2 ●															
	09843-18020	Diagnosis Check Wiring										●						●		
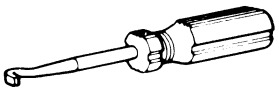	09921-00010	Spring Tension Tool									*3 ●	*3 ●								
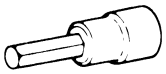	09923-00010	Hexagon 14 mm Wrench	●																	

Remarks:
*1 7M-GTE only
*2 7M-GE only
*3 Speedometer driven gear oil seal

SST (SPECIAL SERVICE TOOLS) (Cont'd)

Section / Part Name / Part No. / Illustration			EM	TC	FI	CO	LU	ST	CH	CL	MT	AT	PR	FA	RA	BR	SR	AB	BE	BO
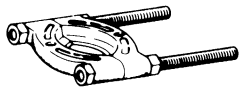	09950-00020	Bearing Remover									●				*1 ●					
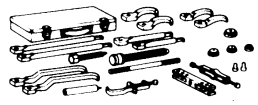	09950-20017	Universal Puller	●								●				●					
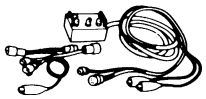	09990-00150	A.B.S. Actuator Checker and Sub-harness														●				
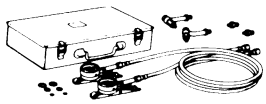	09992-00094	Oil Pressure Gauge Set										●								
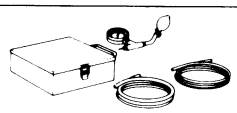	09992-00241	Turbocharger Pressure Gauge		*2 ●															*2 ●	

Remarks:
*1 Upper suspension arm
*2 7M-GTE only

NOTE: For reference to SSTs for the Air Conditioning System see page AC-14.

SSM (SPECIAL SERVICE MATERIALS)

Part Name	Part No.	Sec.	Use etc.
Seal packing or equivalent	08826-00080	EM	Over the space between the timing belt case and cylinder block Cylinder head x No. 1 and No. 2 cylinder head cover Cylinder head x No. 1 camshaft bearing cap
		LU	Engine oil pan
Seal packing 1281, Three bond 1281 or equivalent	08826-00090	MT	Transmission case (R154) Front bearing retainer (R154) Extension housing (R154)
		AT	Transmission case x Oil pan
Adhesive 1324, Three bond 1324 or equivalent	08833-00070	EM	Timing belt case mounting bolt (14 mm head bolt)
		CO	Engine drain cock
Adhesive 1344, Three bond 1344, Loctite 242 or equivalent	08833-00080	MT	Straight screw plug for reverse restrict pin Straight screw plug for shift fork shaft locking ball Front bearing retainer set bolt
		SR	(w/o PPS) Control valve housing bolt Bearing guide nut Bearing guide lock nut Rack guide spring cap Rack guide spring cap lock nut (w/ PPS) Rack housing cap Rack guide spring cap Rack guide spring cap lock nut
Dupont paste No. 4817	–	BE	Rear window defogger
Windshield glass adhesive set No. 15	08850-00070	BO	Windshield glass (0 – 15°C or 32 – 59°F) Back door window glass
Windshield glass adhesive set No. 35	08850-00080	BO	Windshield glass (15 – 35°C or 59 – 95°F) Back door window glass
Windshield glass adhesive set No. 45	08850-00090	BO	Windshield glass (35 – 45°C or 95 – 113°F) Back door window glass
Dam kit	04562-30040	BO	Windshield glass Back door window glass
Butyl tape set	08850-00065	BO	Quarter window glass
Three cement black	08833-00030	BO	Windshield glass

NOTE: For reference to SSMs for the Air Conditioning System see page AC-14.

ELECTRICAL WIRING DIAGRAMS

HOW TO READ THIS SECTION

PIN NUMBER

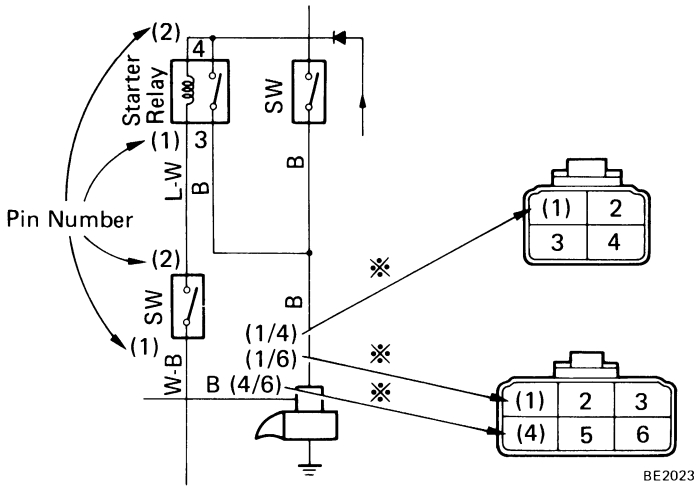

※ When connectors with different numbers of terminals are used with the same parts, the pin number and the numbers of terminals are specified.
e.g. (1/4) = No. 1 pin/4 terminals connector

Numbered in order from upper left to lower right

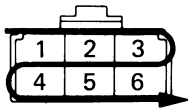

Female

Numbered in order from upper right to lower left

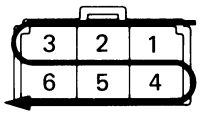

Male

BE0832

Male & female connectors distinguished by shape of their internal pins.

- All connectors are shown from the open end, and the lock is on top.

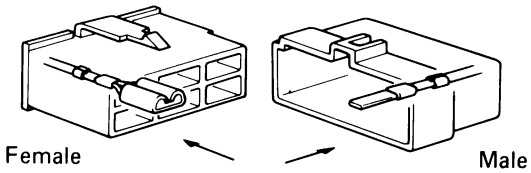

BE0833

JUNCTION BLOCK OR RELAY BLOCK

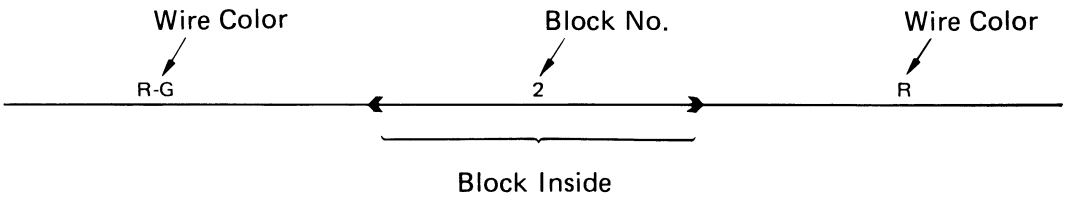

WIRE COLOR

Wire colors are indicated by an alphabetical code.

B = Black	BR = Brown	G = Green	GR = Gray	L = Blue
LG = Light Green	O = Orange	P = Pink	R = Red	V = Violet
W = White	Y = Yellow			

The 1st letter indicates the basic wire color and the 2nd indicates the stripe color.

Example: R-G indicates a Red wire with a Green stripe.

ABBREVIATION

The following abbreviations are used in this wiring diagram.

A.B.S.	= Anti-Lock Brake System	LH	= Left-Hand
A/C	= Air Conditioner	M/T	= Manual Transmission
A/T	= Automatic Transmission	O/D	= Overdrive
CB	= Circuit Breaker	OX	= Oxygen
CD	= Compact Disc	PPS	= Progressive Power Steering
COMB.	= Combination	RH	= Right-Hand
ECT	= Electronic Controlled Transmission	SW	= Switch
ECU	= Electronic Controlled Unit	TCCS	= Toyota Computer Controlled System
EFI	= Electronic Fuel Injection	TEMS	= Toyota Electronic Modulated Suspension
EGR	= Exhaust Gas Recirculation	VSV	= Vacuum Switching Valve
FL	= Fusible Link	w/	= With
ISC	= Idle Speed Control	w/o	= Without

SYSTEM INDEX

TOYOTA SUPRA — 1990 Model (Page 1 to Page 9)

SYSTEMS	LOCATION
A.B.S. (Anti-Lock Brake System)	8-1
Air Conditioner, Cooler and Heater	7-4
Auto Antenna	6-5
Back-up Lights	2-7
Charging	1-8
Cigarette Lighter	6-4
Clock	6-4
Combination Meter	2-2
Cruise Control	5-1
Door Locks	4-6
ECT (Electronic Control Transmission)	2-6
Engine Control	1-5 (7M-GE) 8-6 (7M-GTE)
Fog Lights	5-8
Front Wiper and Washer	3-1
Headlight Cleaner	3-3
Headlights	5-7
Horn	3-5
Interior Lights	6-2
PPS	3-6
Power Seat	4-3
Power Source	1-1 (7M-GE) 8-3 (7M-GTE)
Power Windows	4-1
Radiator Fan and Condenser Fan	7-8
Radio and Tape Player	6-6
Rear Window Defogger	2-4
Rear Wiper and Washer	3-2
Remote Control Mirrors with Heater	6-8
Shift Lock System	2-8
SRS Airbag	9-1
Starting	1-2 (7M-GE) 8-4 (7M-GTE)
Stop Lights	5-3
Taillights and Illumination	5-4
TEMS	3-7
Theft Deterrent System	4-8
Turn Signal and Hazard	3-4
Unlock and Seat Belt Warning	6-1

TOYOTA SUPRA ELECTRICAL WIRING DIAGRAM-1990 Model (Page 1 to P

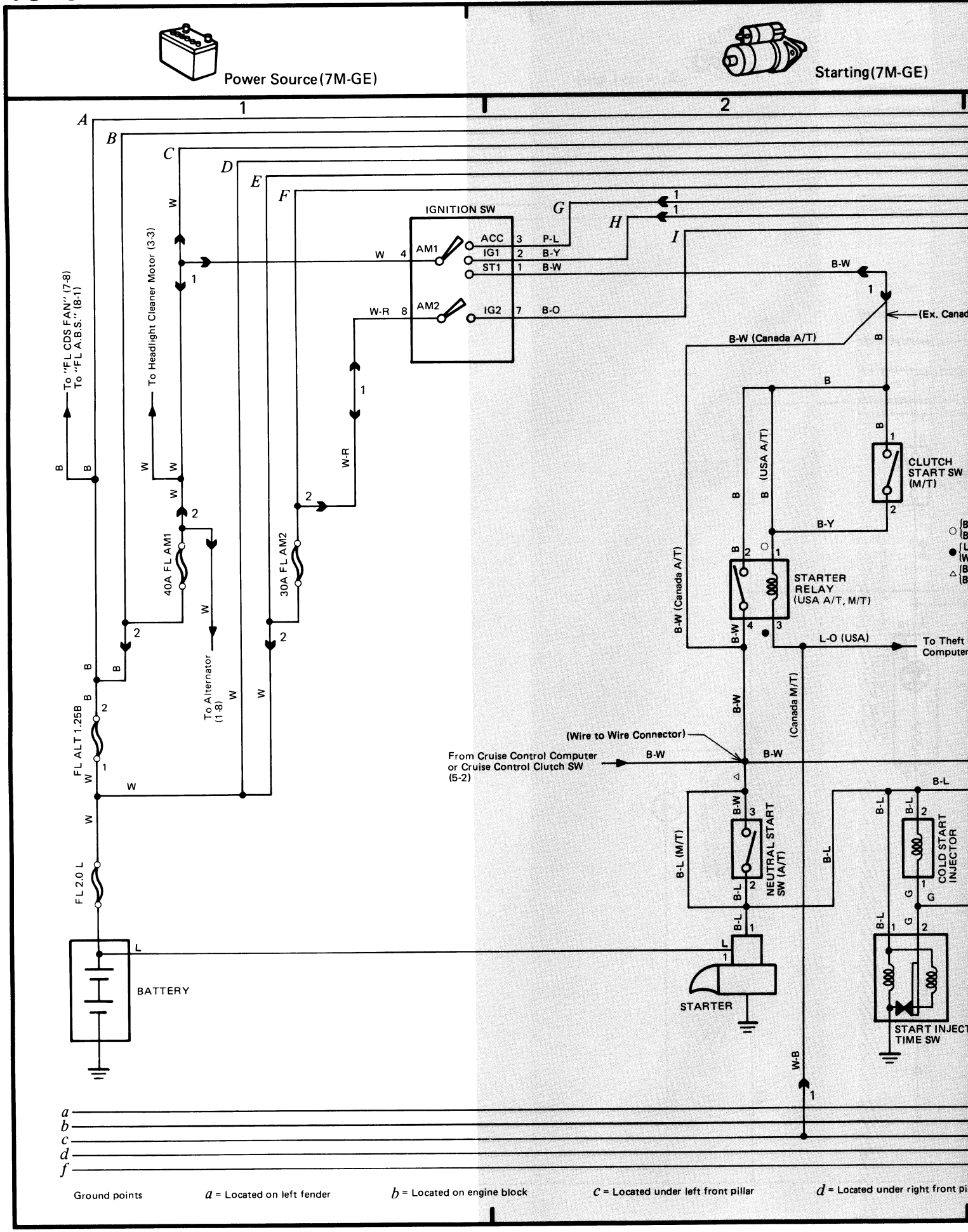

(7M-GE)

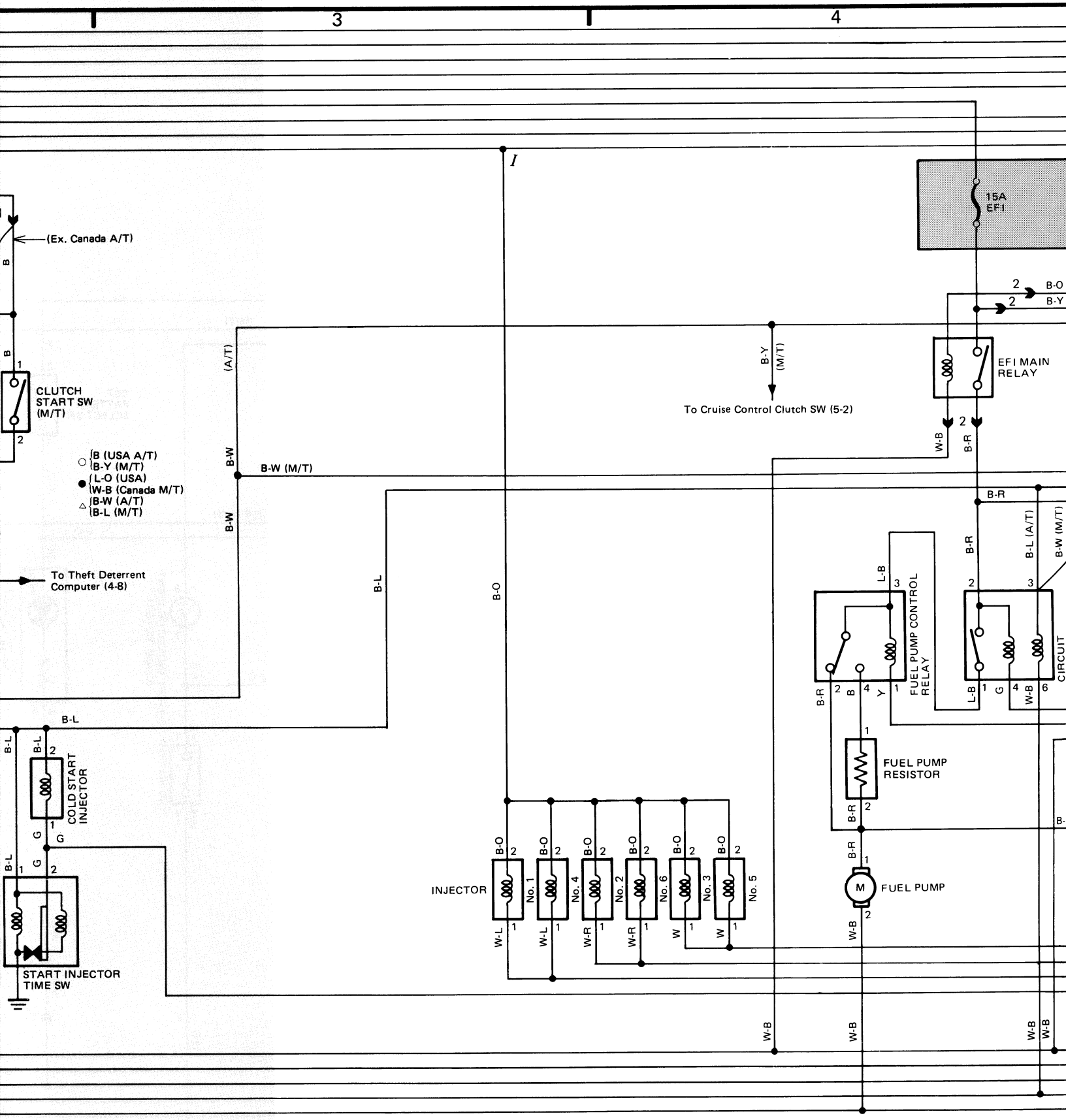

d under right front pillar

f = Located on back panel

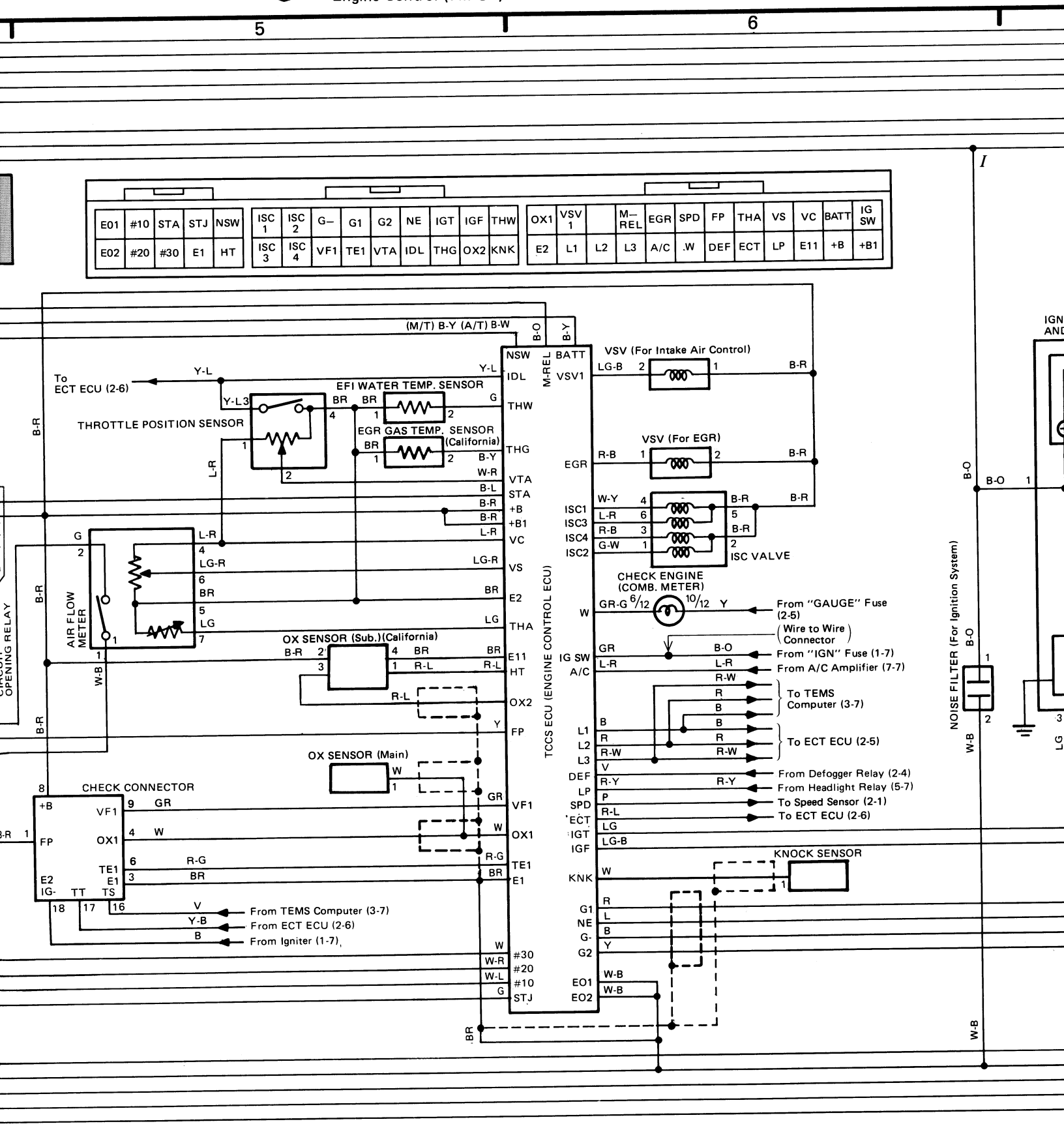
5
6
I
E01 #10 STA STJ NSW
E02 #20 #30 E1 HT
ISC 1 ISC 2 G– G1 G2 NE IGT IGF THW
ISC 3 ISC 4 VF1 TE1 VTA IDL THG OX2 KNK
OX1 VSV 1 M–REL EGR SPD FP THA VS VC BATT IG SW
E2 L1 L2 L3 A/C W DEF ECT LP E11 +B +B1
(M/T) B-Y (A/T) B-W
To ECT ECU (2-6)
THROTTLE POSITION SENSOR
EFI WATER TEMP. SENSOR
EGR GAS TEMP. SENSOR (California)
AIR FLOW METER
OPENING RELAY
OX SENSOR (Sub.)(California)
OX SENSOR (Main)
CHECK CONNECTOR
TCCS ECU (ENGINE CONTROL ECU)
VSV (For Intake Air Control)
VSV (For EGR)
ISC VALVE
CHECK ENGINE (COMB. METER)
From "GAUGE" Fuse (2-5)
Wire to Wire Connector
From "IGN" Fuse (1-7)
From A/C Amplifier (7-7)
To TEMS Computer (3-7)
To ECT ECU (2-5)
From Defogger Relay (2-4)
From Headlight Relay (5-7)
To Speed Sensor (2-1)
To ECT ECU (2-6)
KNOCK SENSOR
From TEMS Computer (3-7)
From ECT ECU (2-6)
From Igniter (1-7)
NOISE FILTER (For Ignition System)

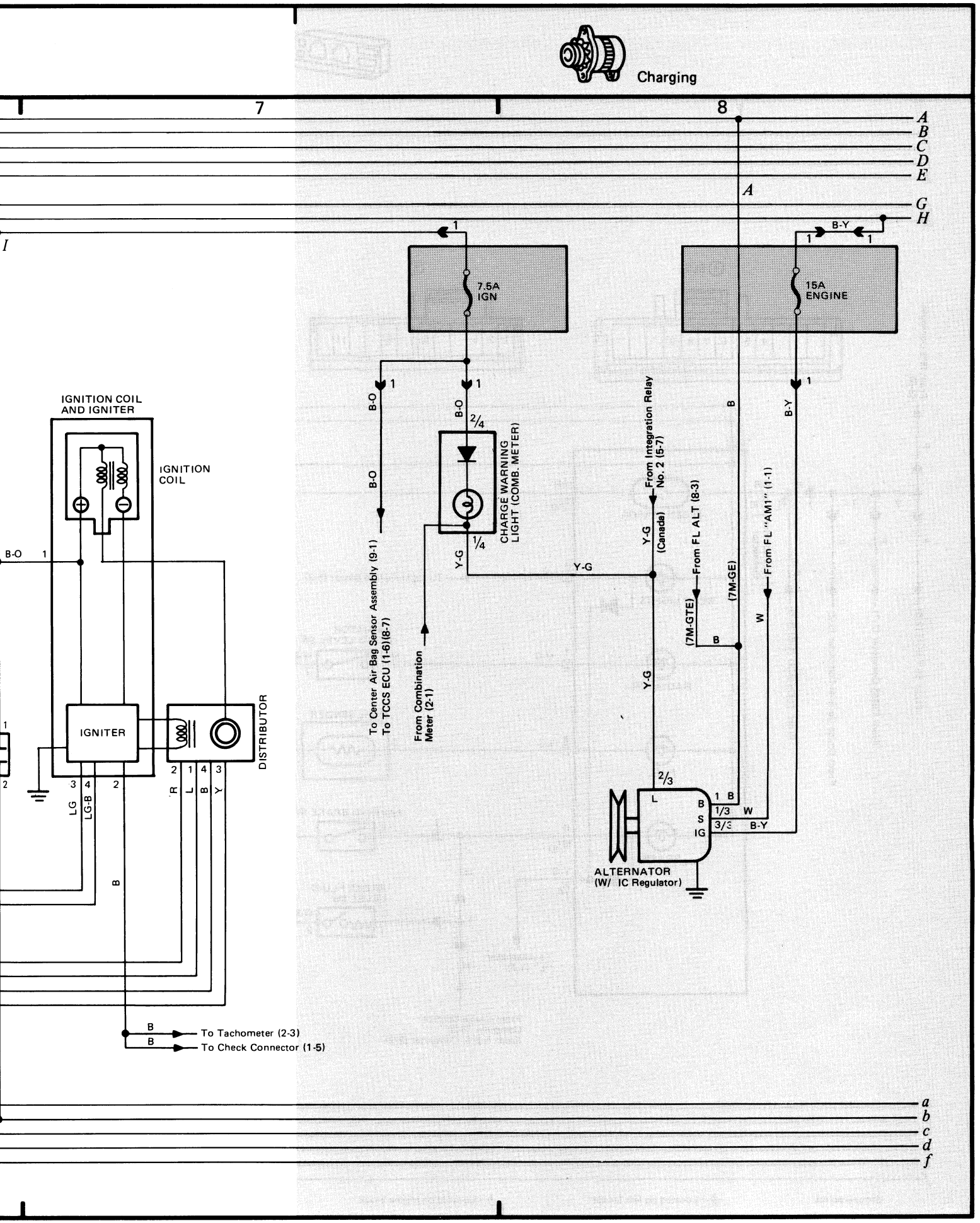
Charging
7
8
A
B
C
D
E
G
H
I
7.5A
IGN
15A
ENGINE
B-Y
B-O
IGNITION COIL
AND IGNITER
IGNITION
COIL
IGNITER
DISTRIBUTOR
LG
LG-B
B
R
L
Y
To Tachometer (2-3)
To Check Connector (1-5)
2/4
1/4
CHARGE WARNING
LIGHT (COMB. METER)
Y-G
To Center Air Bag Sensor Assembly (9-1)
To TCCS ECU (1-6)(8-7)
From Combination
Meter (2-1)
From Integration Relay
No. 2 (5-7)
(Canada)
From FL ALT (8-3)
(7M-GTE)
(7M-GE)
From FL "AM1" (1-1)
W
2/3
L
B
S
IG
1/3
3/3
ALTERNATOR
(W/ IC Regulator)
a
b
c
d
f

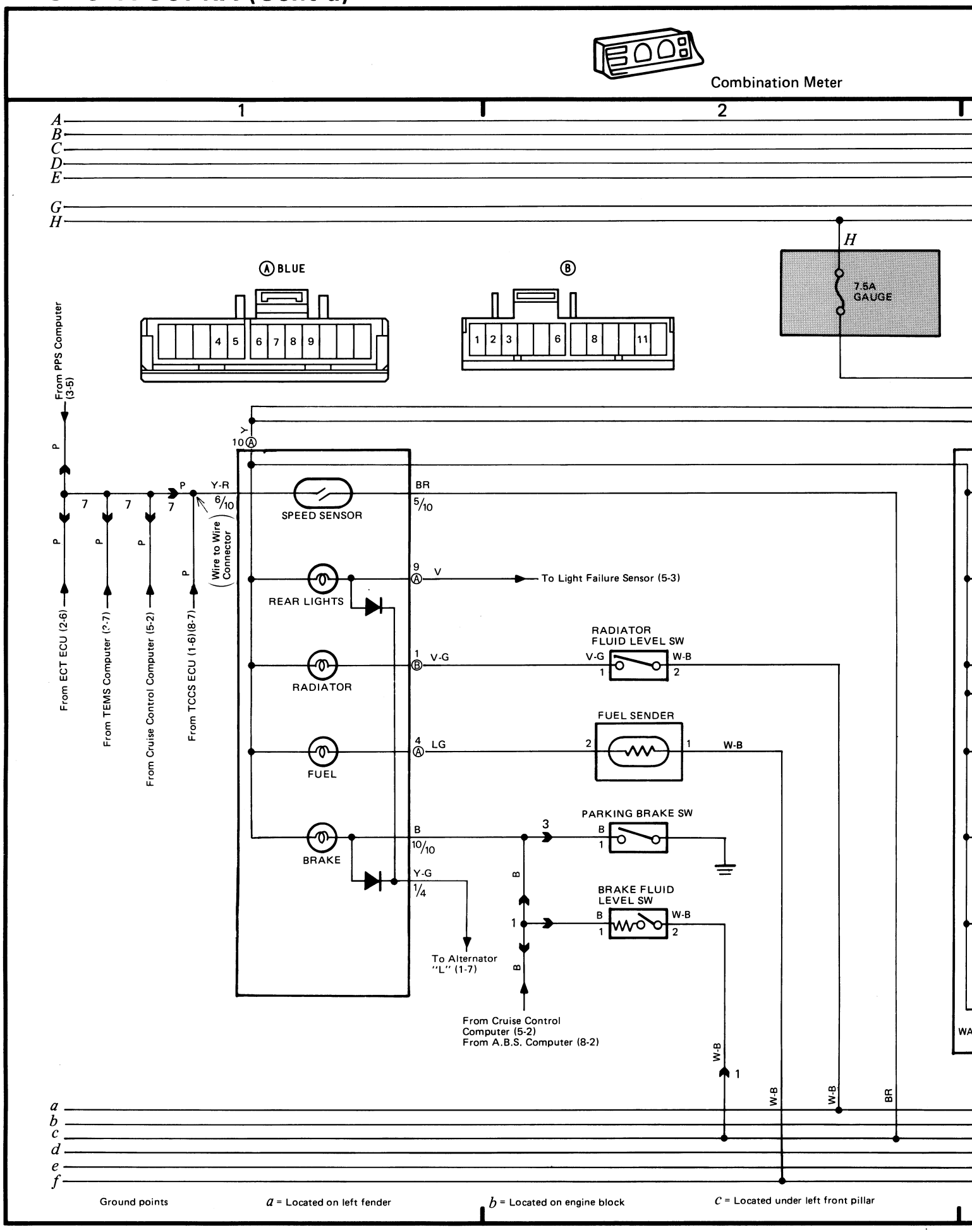
Combination Meter
1
2
A
B
C
D
E
G
H
H
7.5A GAUGE
Ⓐ BLUE
Ⓑ
4 5 6 7 8 9
1 2 3 6 8 11
From PPS Computer (3-5)
P
7
7
7
P
Y-R
6/10
Wire to Wire Connector
10 Ⓐ
Y
SPEED SENSOR
BR
5/10
REAR LIGHTS
9 Ⓐ V
To Light Failure Sensor (5-3)
RADIATOR
1 Ⓑ V-G
RADIATOR FLUID LEVEL SW
V-G
W-B
1
2
FUEL
4 Ⓐ LG
FUEL SENDER
2
1
W-B
BRAKE
B
10/10
Y-G
1/4
3
PARKING BRAKE SW
B
1
BRAKE FLUID LEVEL SW
B
W-B
1
2
To Alternator "L" (1-7)
From Cruise Control Computer (5-2)
From A.B.S. Computer (8-2)
From ECT ECU (2-6)
From TEMS Computer (2-7)
From Cruise Control Computer (5-2)
From TCCS ECU (1-6)(8-7)
W-B
1
W-B
W-B
BR
a
b
c
d
e
f
Ground points
a = Located on left fender
b = Located on engine block
c = Located under left front pillar

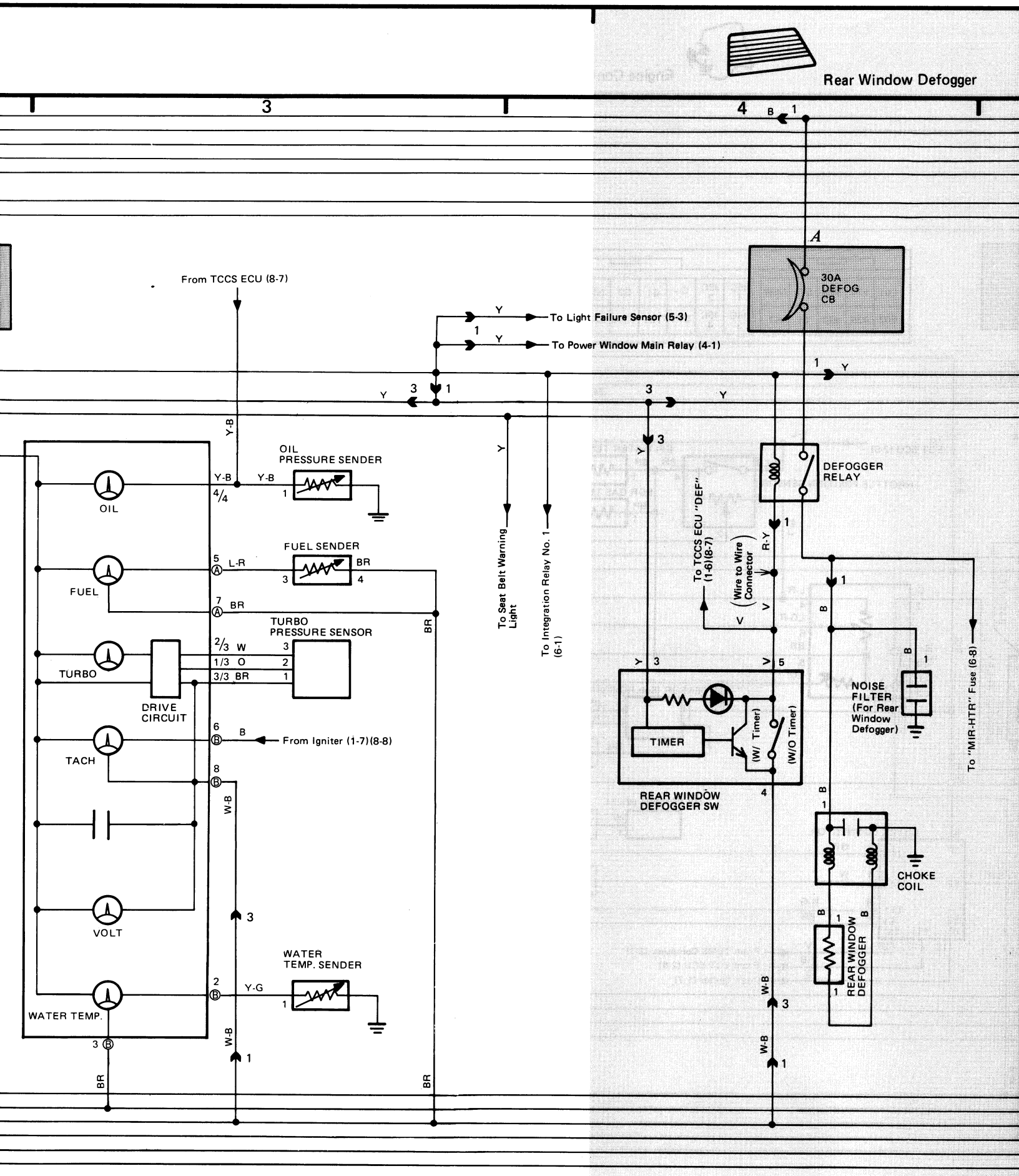

d = Located under right front pillar

e = Located behind radio

f = Located on back panel

ECT (Electronic Controlled Transmission)

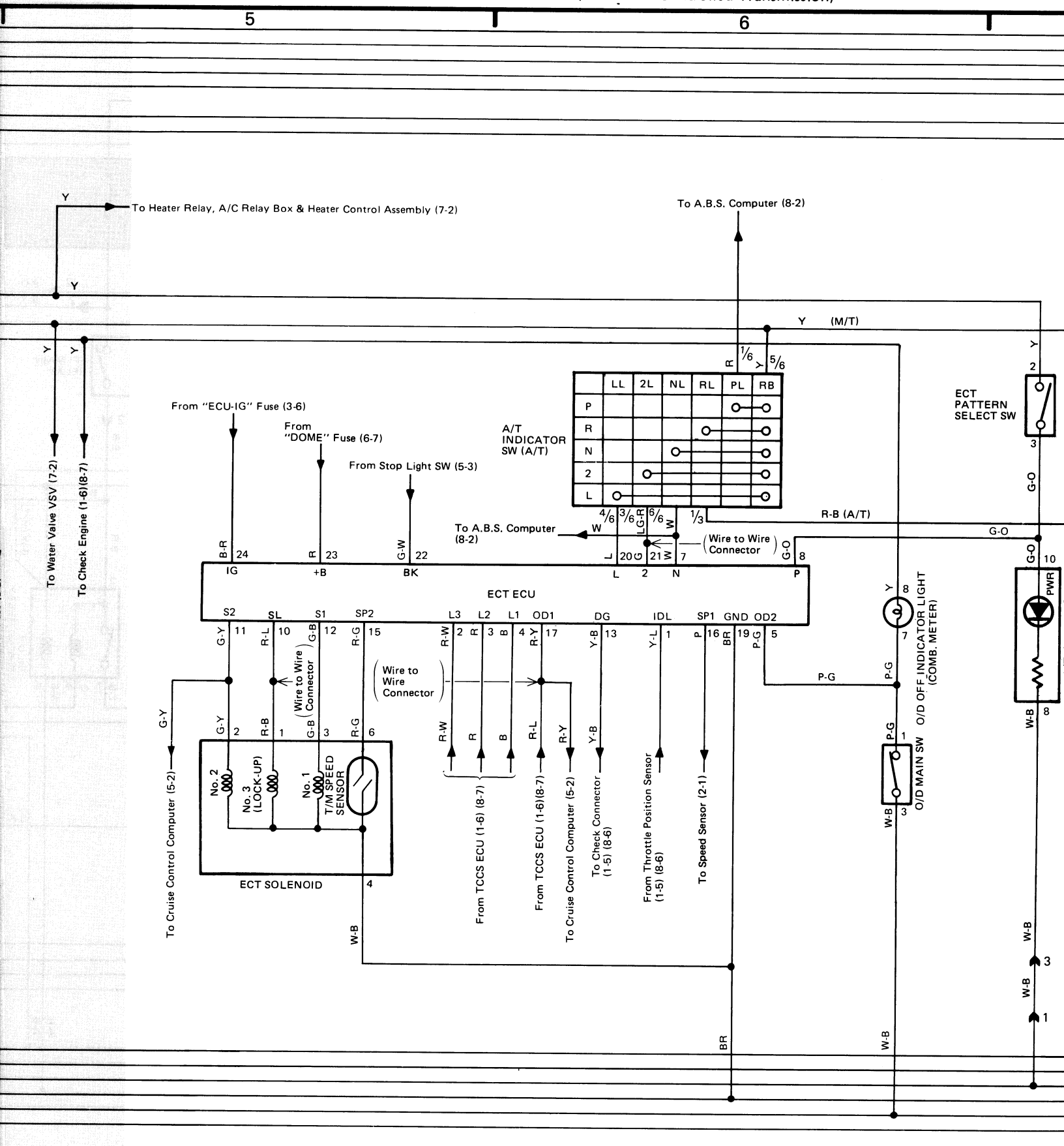

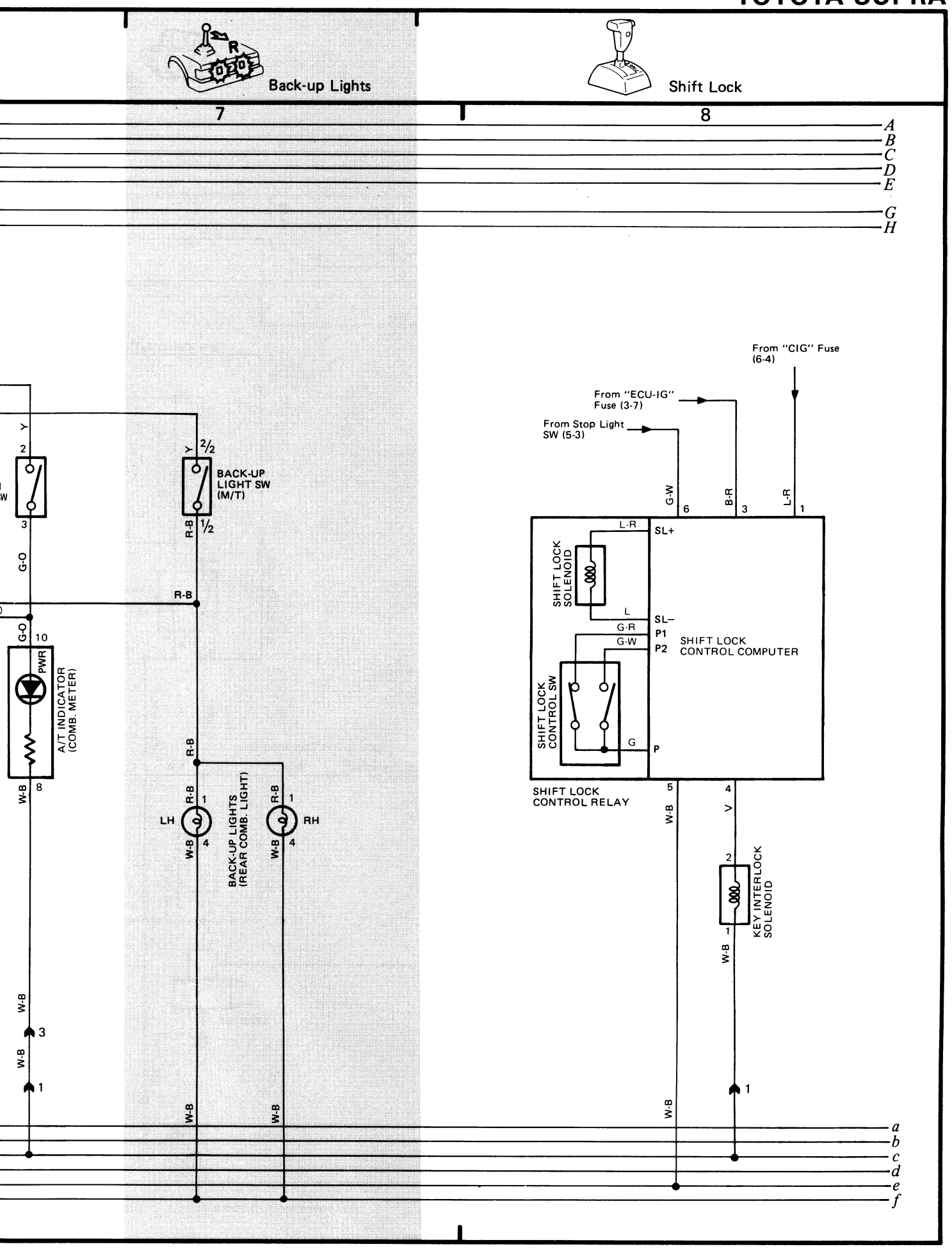
Back-up Lights
Shift Lock
7
8
A
B
C
D
E
G
H
BACK-UP LIGHT SW (M/T)
A/T INDICATOR (COMB. METER)
BACK-UP LIGHTS (REAR COMB. LIGHT)
LH
RH
From "CIG" Fuse (6-4)
From "ECU-IG" Fuse (3-7)
From Stop Light SW (5-3)
SHIFT LOCK SOLENOID
SHIFT LOCK CONTROL SW
SHIFT LOCK CONTROL COMPUTER
SHIFT LOCK CONTROL RELAY
KEY INTERLOCK SOLENOID
SL+
SL–
P1
P2
P
a
b
c
d
e
f

TOYOTA SUPRA (Cont'd)

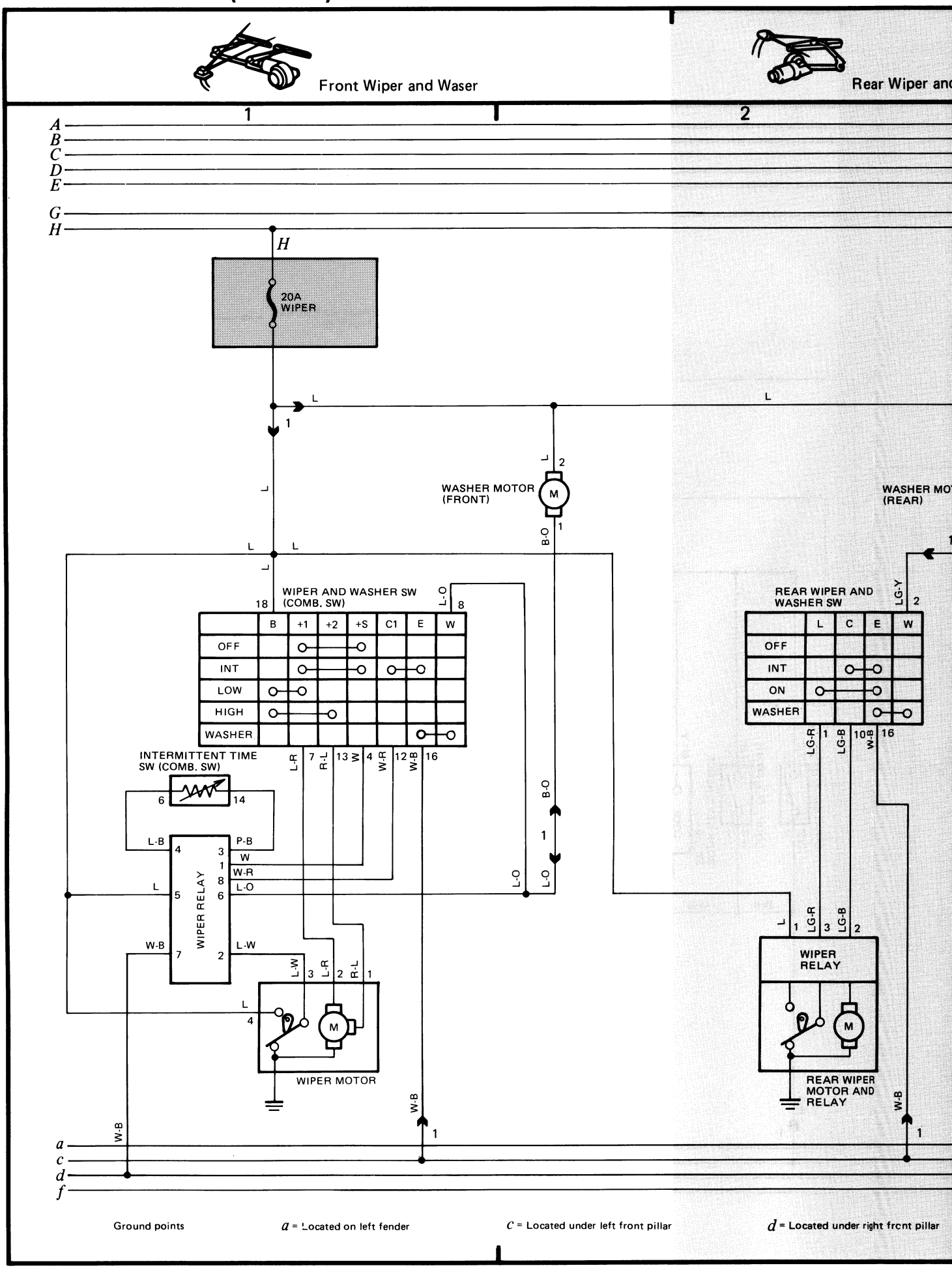

Ground points

a = Located on left fender

c = Located under left front pillar

d = Located under right front pillar

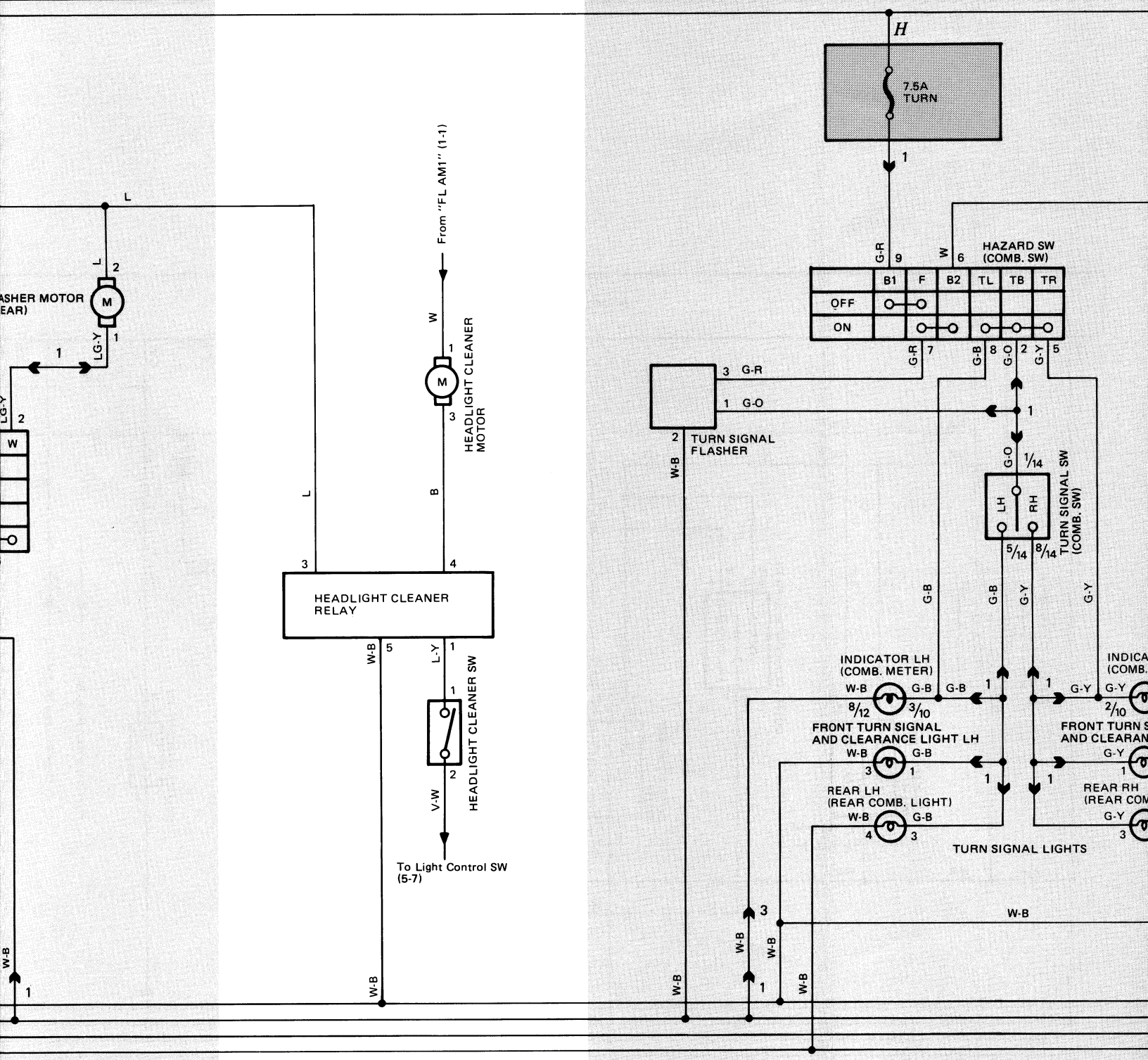

front pillar

f = Located on back panel

g = Located on right fender

Horn

PPS (Progressive Power Steering)

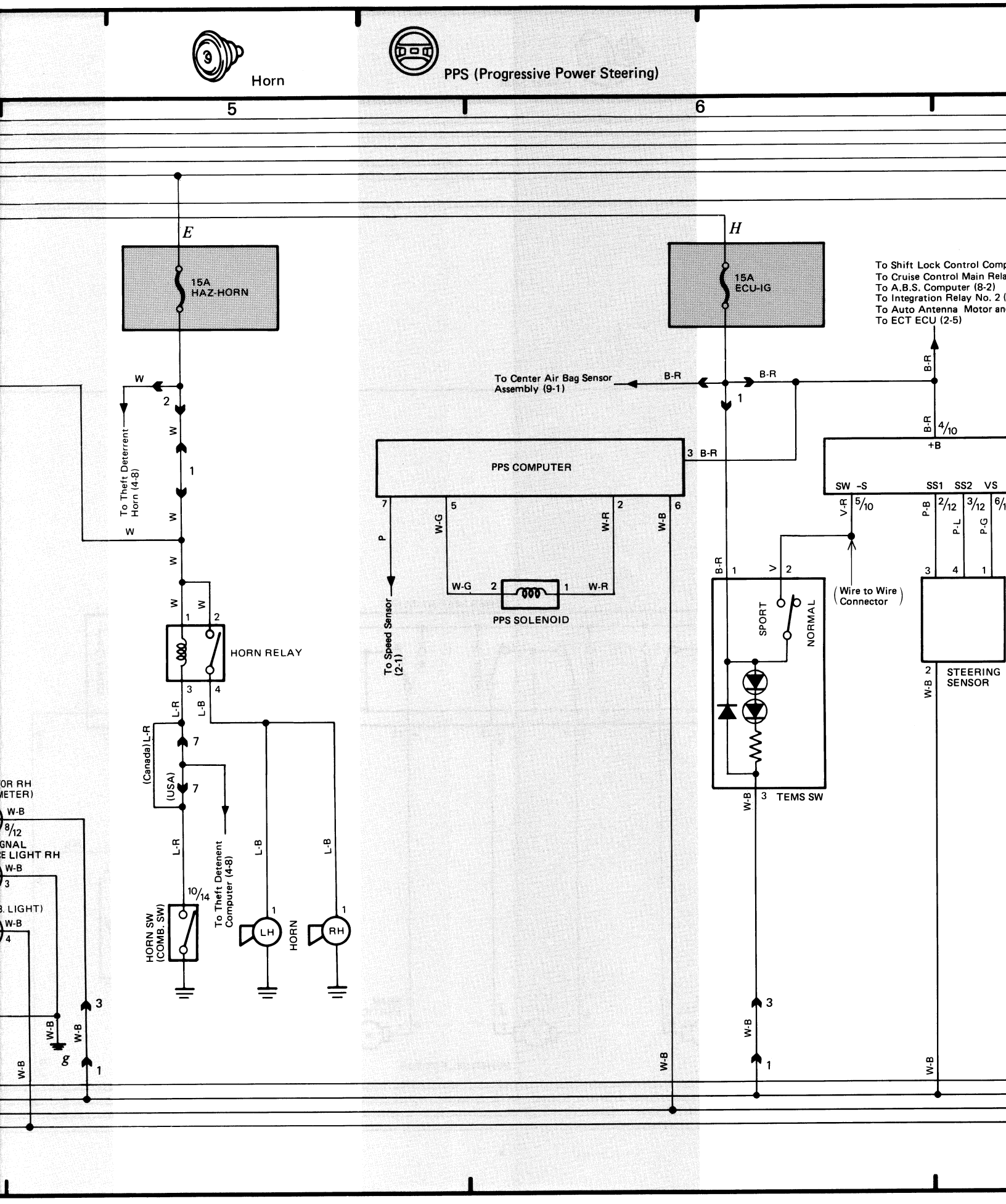

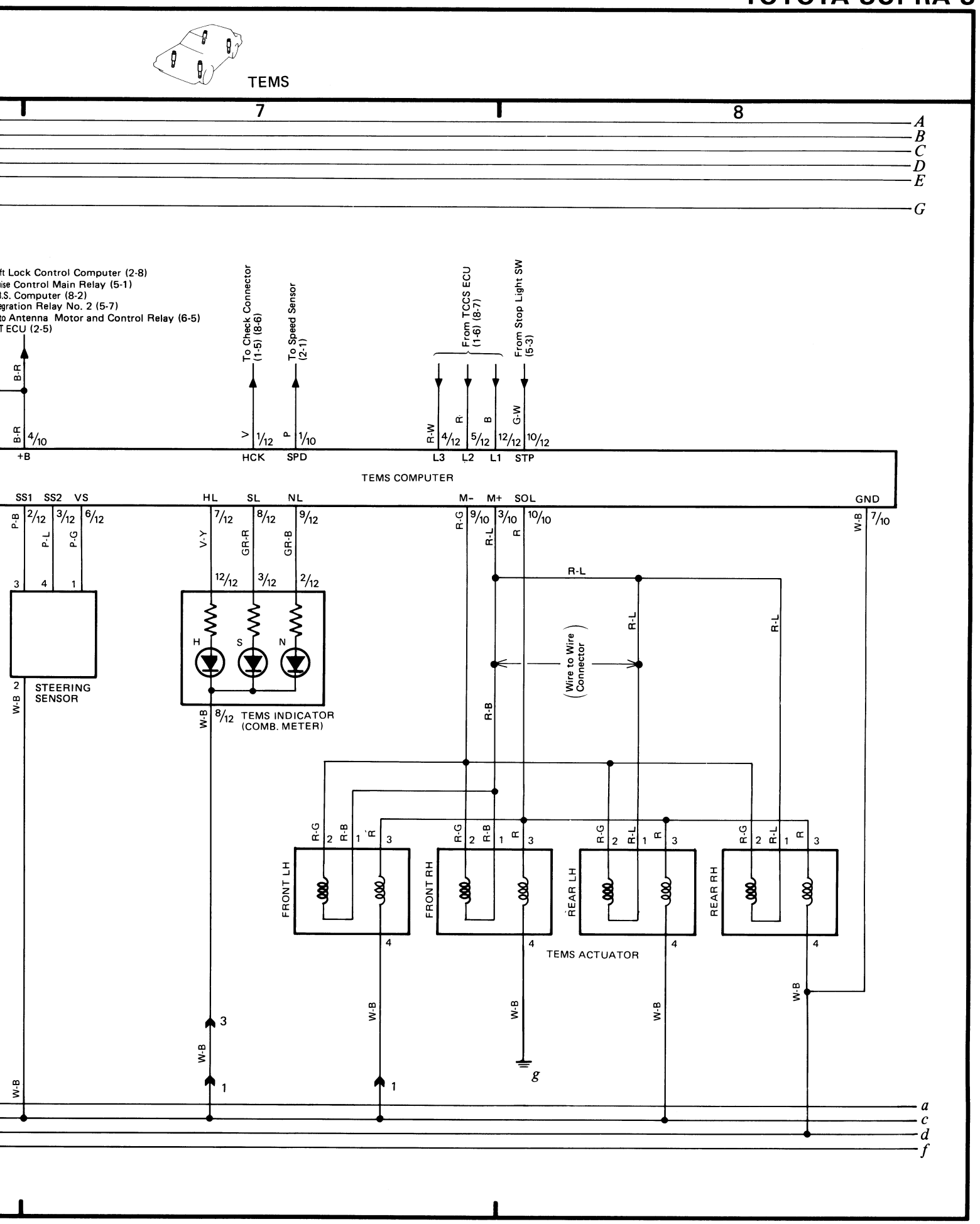
TEMS
7
8
A
B
C
D
E
G
ft Lock Control Computer (2-8)
ise Control Main Relay (5-1)
.S. Computer (8-2)
gration Relay No. 2 (5-7)
to Antenna Motor and Control Relay (6-5)
T ECU (2-5)
To Check Connector (1-5) (8-6)
To Speed Sensor (2-1)
From TCCS ECU (1-6) (8-7)
From Stop Light SW (5-3)
B-R
B-R 4/10
+B
V 1/12
HCK
P 1/10
SPD
R-W 4/12
R 5/12
B 12/12
G-W 10/12
L3
L2
L1
STP
TEMS COMPUTER
SS1
SS2
VS
HL
SL
NL
M-
M+
SOL
GND
P-B 2/12
P-L 3/12
P-G 6/12
V-Y 7/12
GR-R 8/12
GR-B 9/12
R-G 9/10
R-L 3/10
R 10/10
W-B 7/10
R-L
3
4
1
12/12
3/12
2/12
H
S
N
2
W-B
STEERING SENSOR
W-B 8/12
TEMS INDICATOR (COMB. METER)
R-B
Wire to Wire Connector
R-L
R-L
R-G 2
R-B 1
R 3
FRONT LH
FRONT RH
REAR LH
REAR RH
4
TEMS ACTUATOR
W-B
3
1
g
a
c
d
f

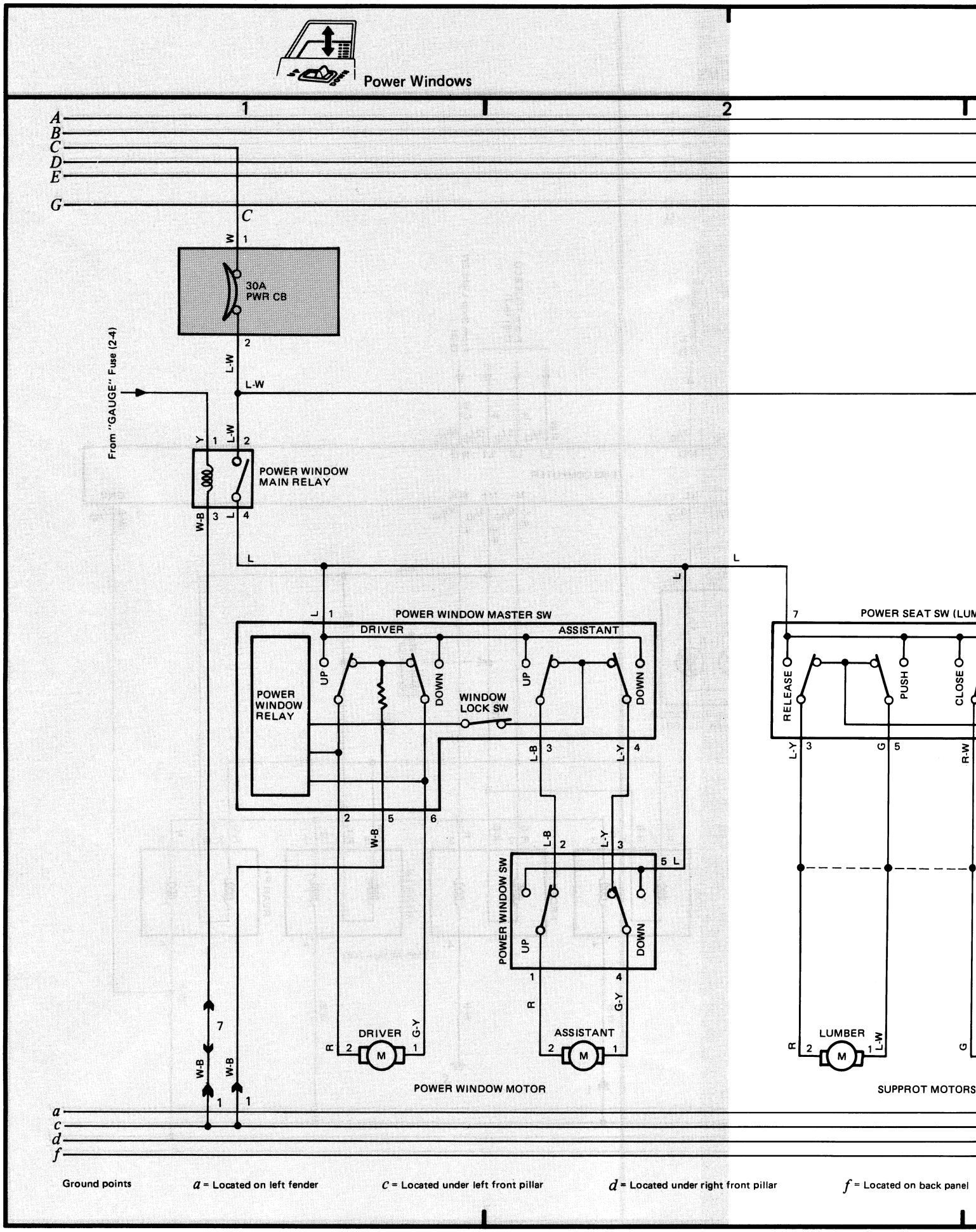
Power Windows
1
2
A
B
C
D
E
G
30A
PWR CB
From "GAUGE" Fuse (2-4)
L-W
POWER WINDOW
MAIN RELAY
W-B
POWER WINDOW MASTER SW
DRIVER
ASSISTANT
UP
DOWN
POWER
WINDOW
RELAY
WINDOW
LOCK SW
L-B
L-Y
POWER WINDOW SW
DRIVER
ASSISTANT
POWER WINDOW MOTOR
POWER SEAT SW (LUM
RELEASE
PUSH
CLOSE
LUMBER
SUPPROT MOTORS
a
c
d
f
Ground points
a = Located on left fender
c = Located under left front pillar
d = Located under right front pillar
f = Located on back panel

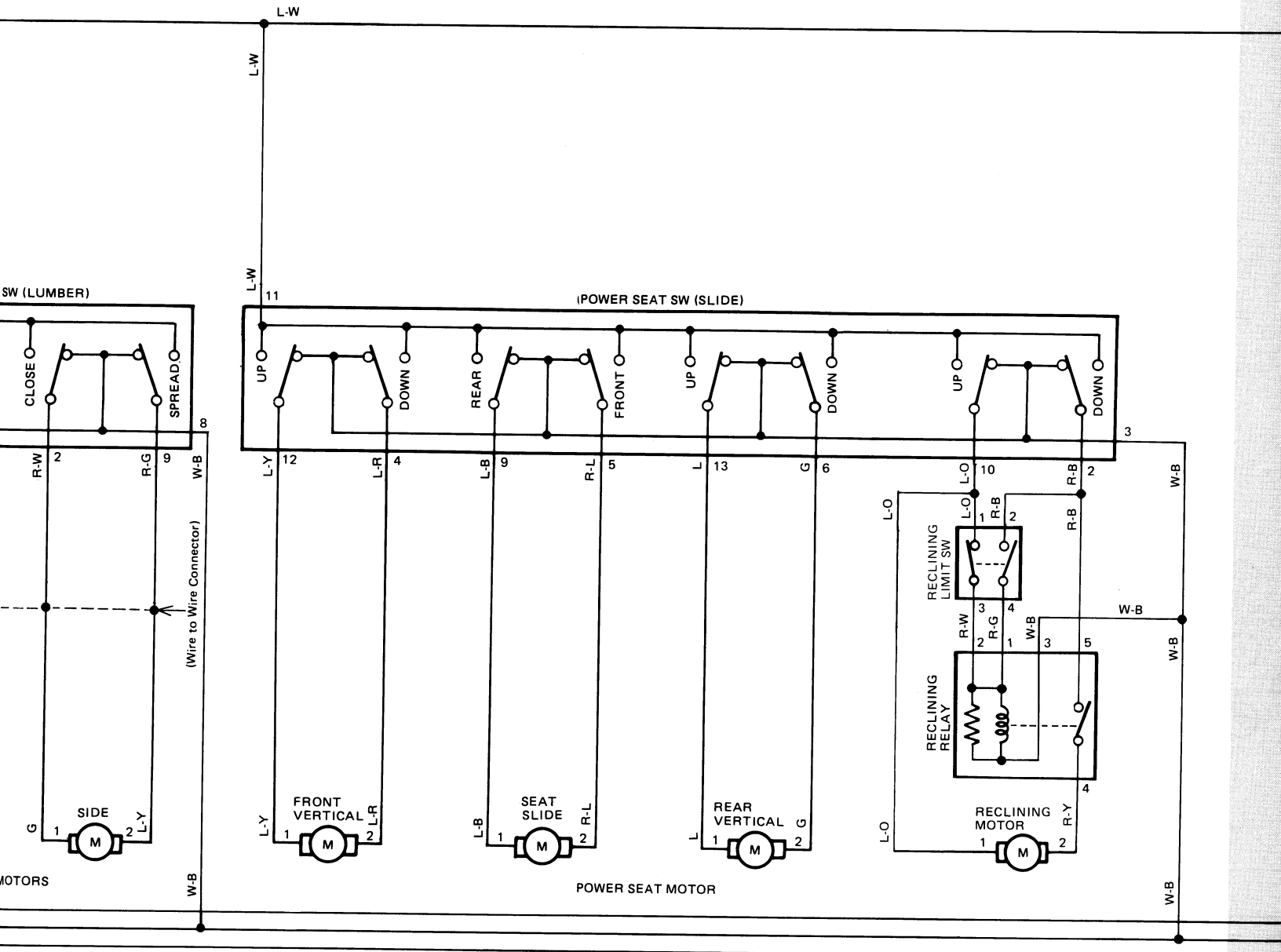
L-W
SW (LUMBER)
CLOSE
SPREAD
8
R-W
2
R-G
9
W-B
(Wire to Wire Connector)
G
1
SIDE
M
2
L-Y
MOTORS
W-B
L-W
11
(POWER SEAT SW (SLIDE)
UP
DOWN
REAR
FRONT
UP
DOWN
UP
DOWN
3
L-Y
12
L-R
4
L-B
9
R-L
5
L
13
G
6
L-O
10
R-B
2
W-B
L-O
1
R-B
2
RECLINING LIMIT SW
3
4
R-W
R-G
W-B
2
1
3
5
RECLINING RELAY
4
L-Y
1
FRONT VERTICAL
M
2
L-R
L-B
1
SEAT SLIDE
M
2
R-L
L
1
REAR VERTICAL
M
2
G
L-O
RECLINING MOTOR
1
M
2
R-Y
POWER SEAT MOTOR
W-B

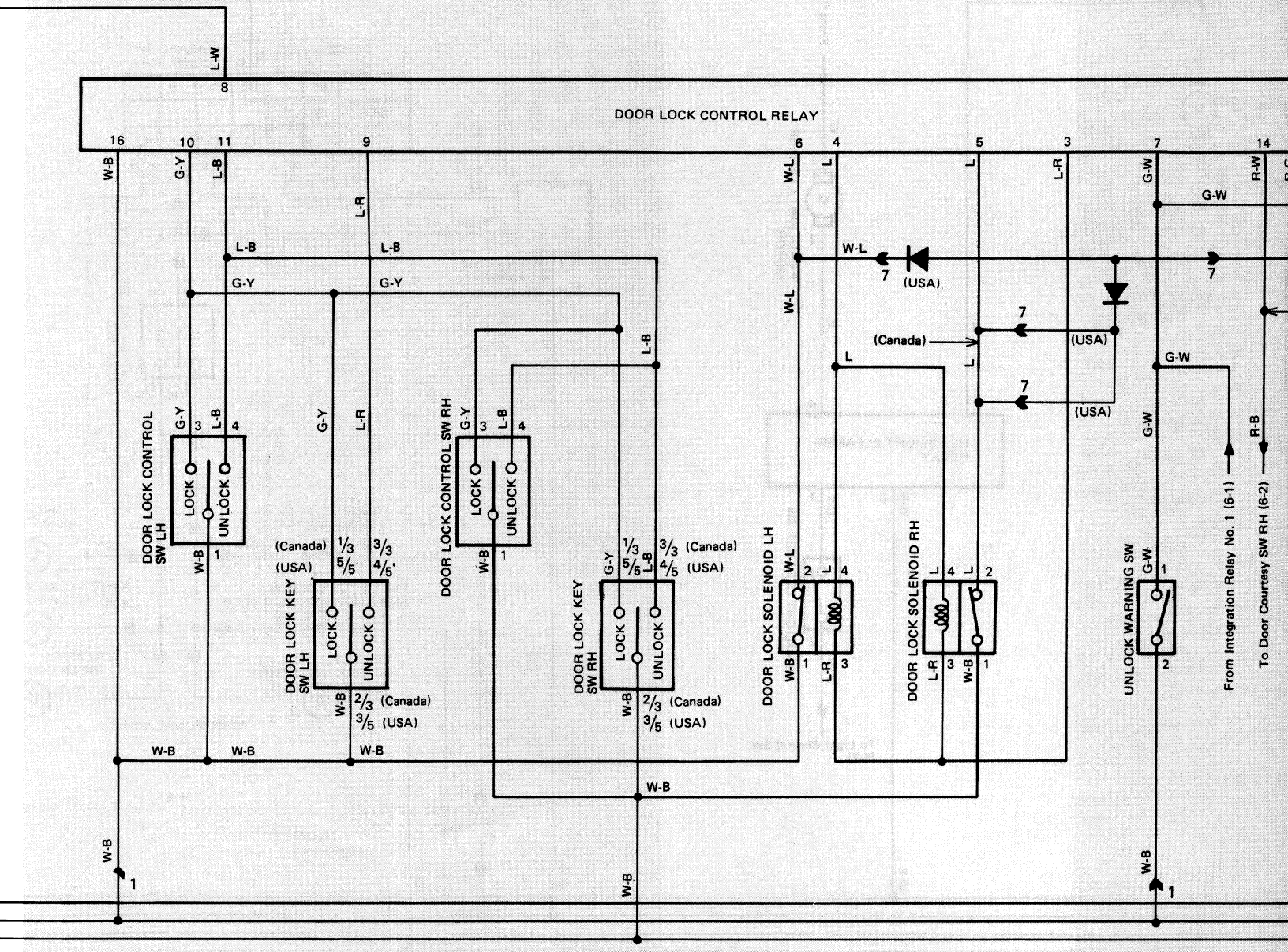
5
6
DOOR LOCK CONTROL RELAY
DOOR LOCK CONTROL SW LH
DOOR LOCK CONTROL SW RH
DOOR LOCK KEY SW LH
DOOR LOCK KEY SW RH
DOOR LOCK SOLENOID LH
DOOR LOCK SOLENOID RH
UNLOCK WARNING SW
LOCK
UNLOCK
(Canada)
(USA)
From Integration Relay No. 1 (6-1)
To Door Courtesy SW RH (6-2)

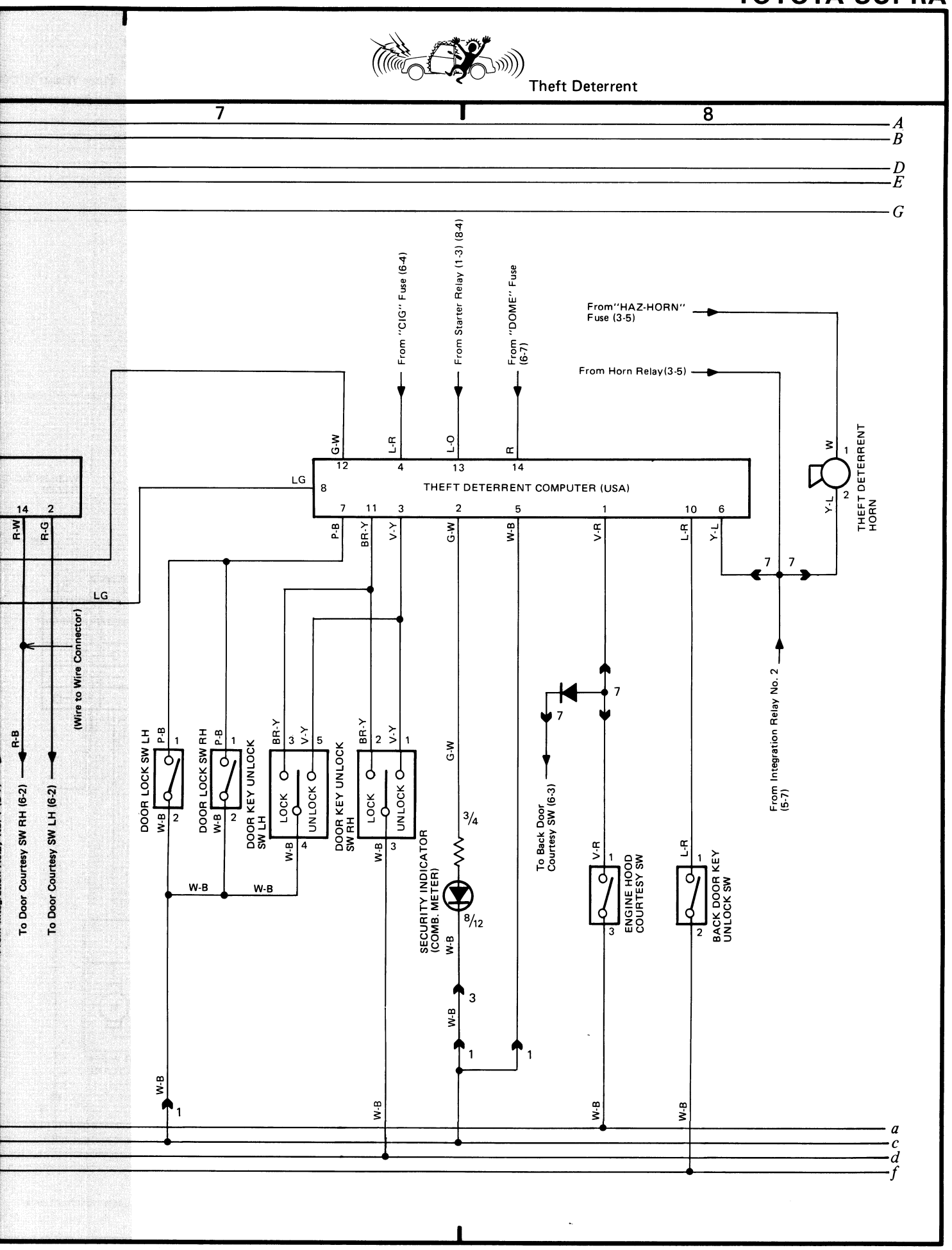
Theft Deterrent
7
8
A
B
D
E
G
From "CIG" Fuse (6-4)
From Starter Relay (1-3) (8-4)
From "DOME" Fuse (6-7)
From "HAZ-HORN" Fuse (3-5)
From Horn Relay (3-5)
THEFT DETERRENT COMPUTER (USA)
THEFT DETERRENT HORN
DOOR LOCK SW LH
DOOR LOCK SW RH
DOOR KEY UNLOCK SW LH
DOOR KEY UNLOCK SW RH
LOCK
UNLOCK
SECURITY INDICATOR (COMB. METER)
To Back Door Courtesy SW (6-3)
ENGINE HOOD COURTESY SW
BACK DOOR KEY UNLOCK SW
From Integration Relay No. 2 (5-7)
(Wire to Wire Connector)
To Door Courtesy SW RH (6-2)
To Door Courtesy SW LH (6-2)
a
c
d
f

Cruise Control

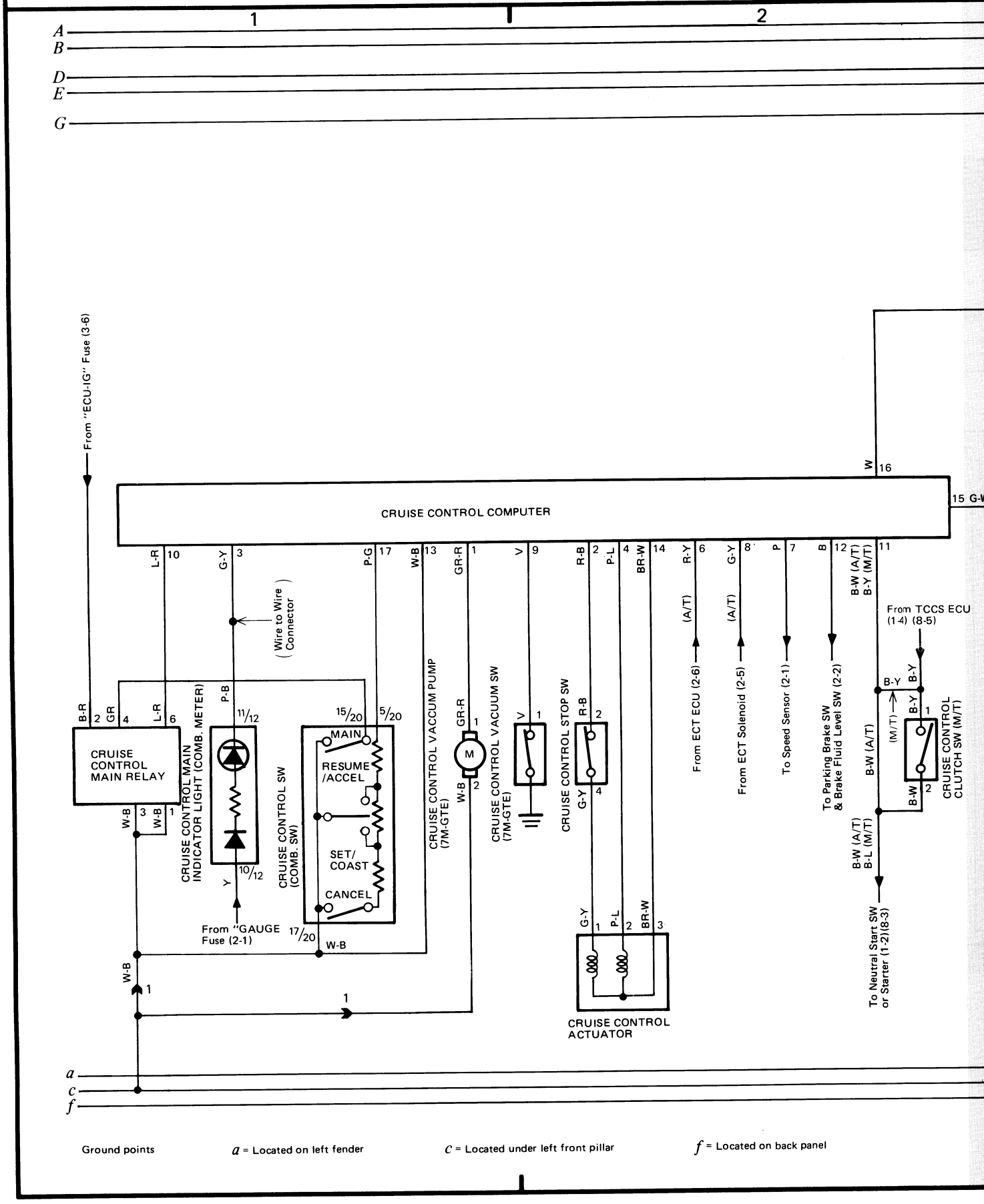

Ground points — *a* = Located on left fender — *c* = Located under left front pillar — *f* = Located on back panel

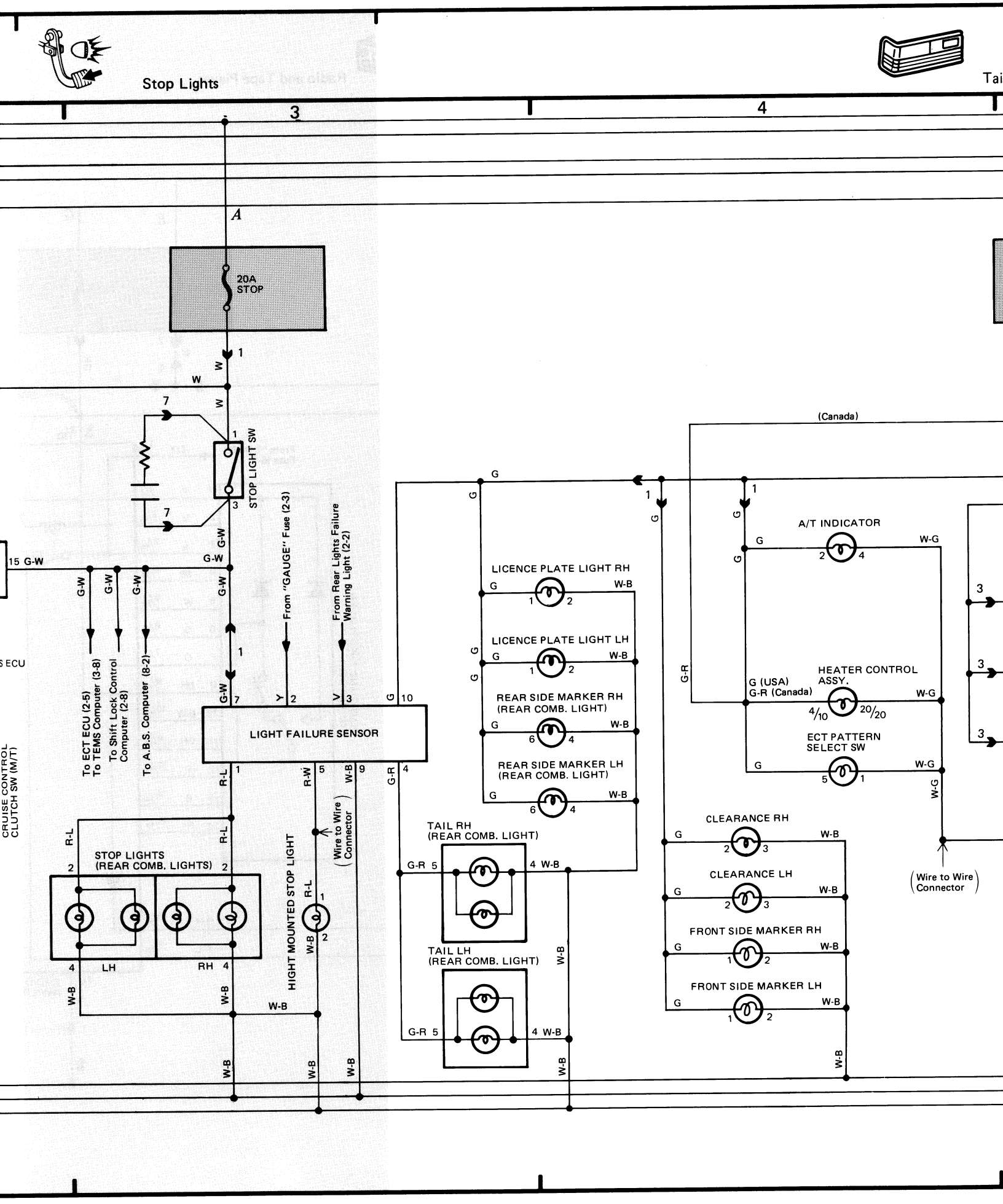

Stop Lights
Tai
3
4
A
20A STOP
STOP LIGHT SW
15 G-W
G-W
From "GAUGE" Fuse (2-3)
From Rear Lights Failure Warning Light (2-2)
To ECT ECU (2-5)
To TEMS Computer (3-8)
To Shift Lock Control Computer (2-8)
To A.B.S. Computer (8-2)
LIGHT FAILURE SENSOR
CRUISE CONTROL CLUTCH SW (M/T)
STOP LIGHTS (REAR COMB. LIGHTS)
LH
RH
HIGHT MOUNTED STOP LIGHT
Wire to Wire Connector
LICENCE PLATE LIGHT RH
LICENCE PLATE LIGHT LH
REAR SIDE MARKER RH (REAR COMB. LIGHT)
REAR SIDE MARKER LH (REAR COMB. LIGHT)
TAIL RH (REAR COMB. LIGHT)
TAIL LH (REAR COMB. LIGHT)
(Canada)
A/T INDICATOR
HEATER CONTROL ASSY.
G (USA)
G-R (Canada)
ECT PATTERN SELECT SW
CLEARANCE RH
CLEARANCE LH
FRONT SIDE MARKER RH
FRONT SIDE MARKER LH
Wire to Wire Connector

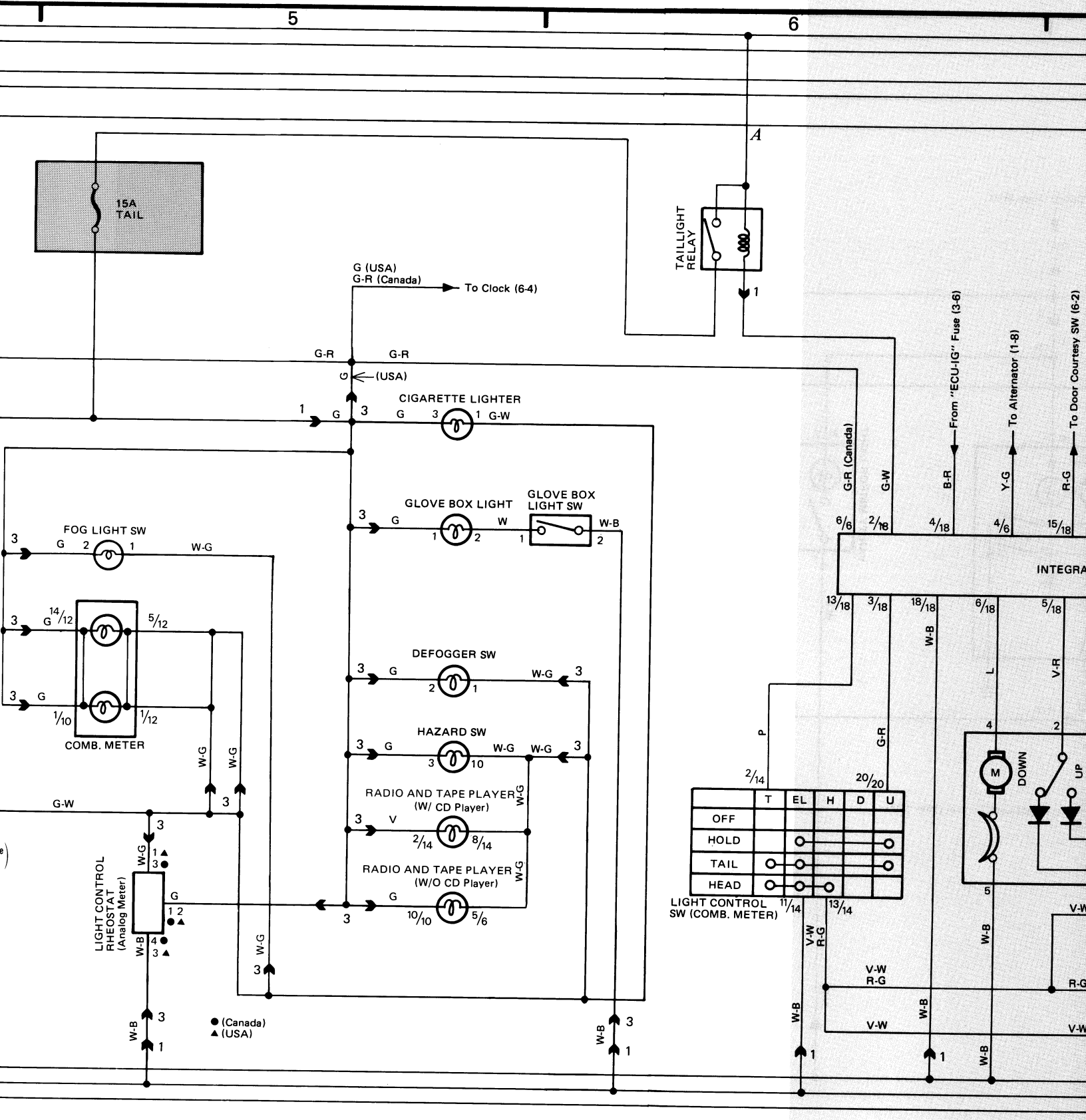
5
6
A
15A TAIL
TAILLIGHT RELAY
G (USA)
G-R (Canada)
To Clock (6-4)
G-R
G-R
G
(USA)
CIGARETTE LIGHTER
G
G-W
GLOVE BOX LIGHT
GLOVE BOX LIGHT SW
W
W-B
FOG LIGHT SW
W-G
COMB. METER
DEFOGGER SW
HAZARD SW
RADIO AND TAPE PLAYER (W/ CD Player)
RADIO AND TAPE PLAYER (W/O CD Player)
LIGHT CONTROL RHEOSTAT (Analog Meter)
● (Canada)
▲ (USA)
G-R (Canada)
G-W
B-R
From "ECU-IG" Fuse (3-6)
Y-G
To Alternator (1-8)
R-G
To Door Courtesy SW (6-2)
INTEGRA
P
G-R
L
V-R
DOWN
UP
M
T
EL
H
D
U
OFF
HOLD
TAIL
HEAD
LIGHT CONTROL SW (COMB. METER)
V-W
R-G
W-B
V-W

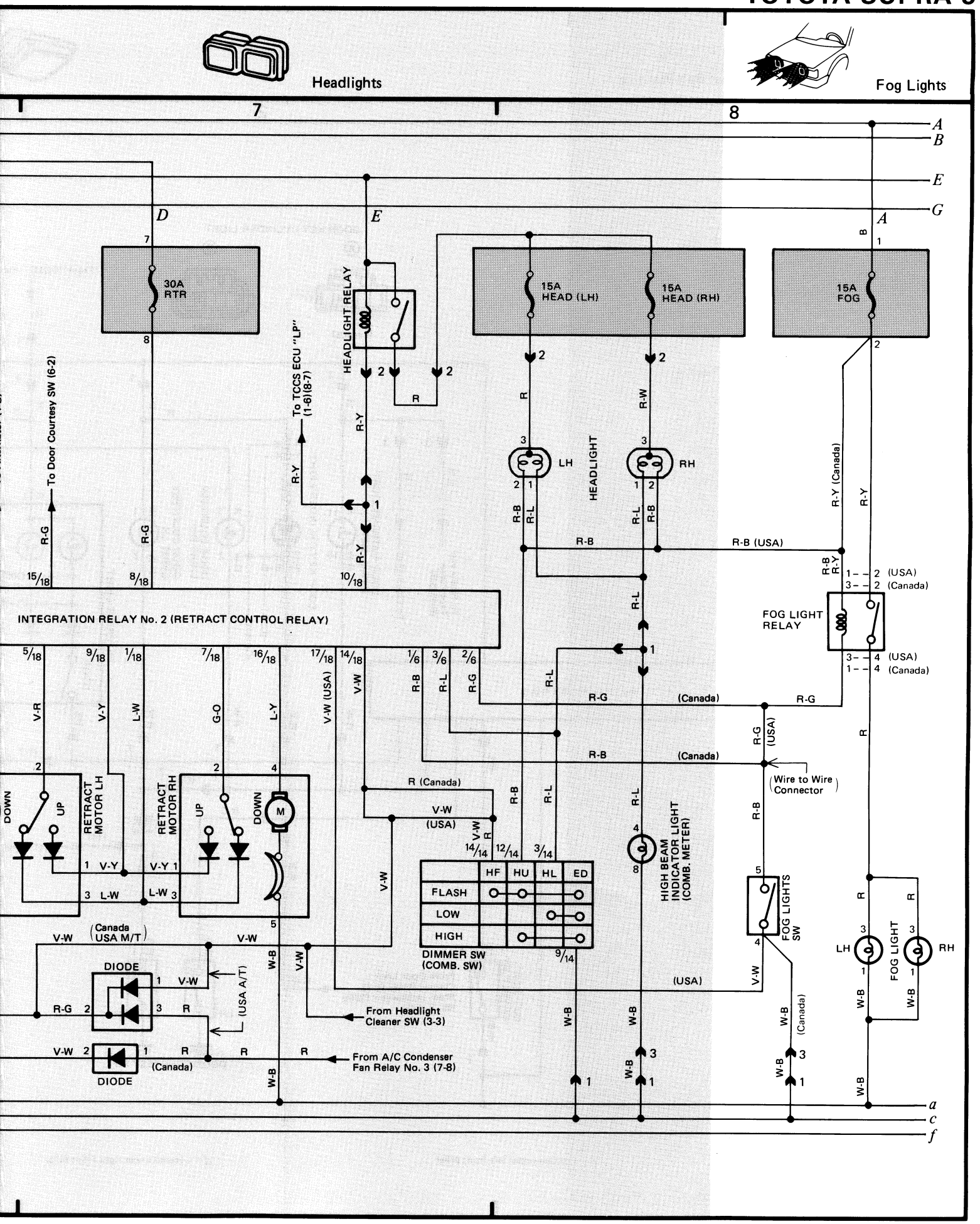
Headlights
Fog Lights
7
8
30A RTR
HEADLIGHT RELAY
15A HEAD (LH)
15A HEAD (RH)
15A FOG
To Door Courtesy SW (6-2)
To TCCS ECU "LP" (1-6)(8-7)
HEADLIGHT
LH
RH
R-Y (Canada)
R-B (USA)
FOG LIGHT RELAY
INTEGRATION RELAY No. 2 (RETRACT CONTROL RELAY)
RETRACT MOTOR LH
RETRACT MOTOR RH
DOWN
UP
M
R (Canada)
V-W (USA)
Wire to Wire Connector
HIGH BEAM INDICATOR LIGHT (COMB. METER)
FOG LIGHTS SW
FOG LIGHT
HF
HU
HL
ED
FLASH
LOW
HIGH
DIMMER SW (COMB. SW)
Canada USA M/T
DIODE
(USA A/T)
From Headlight Cleaner SW (3-3)
From A/C Condenser Fan Relay No. 3 (7-8)

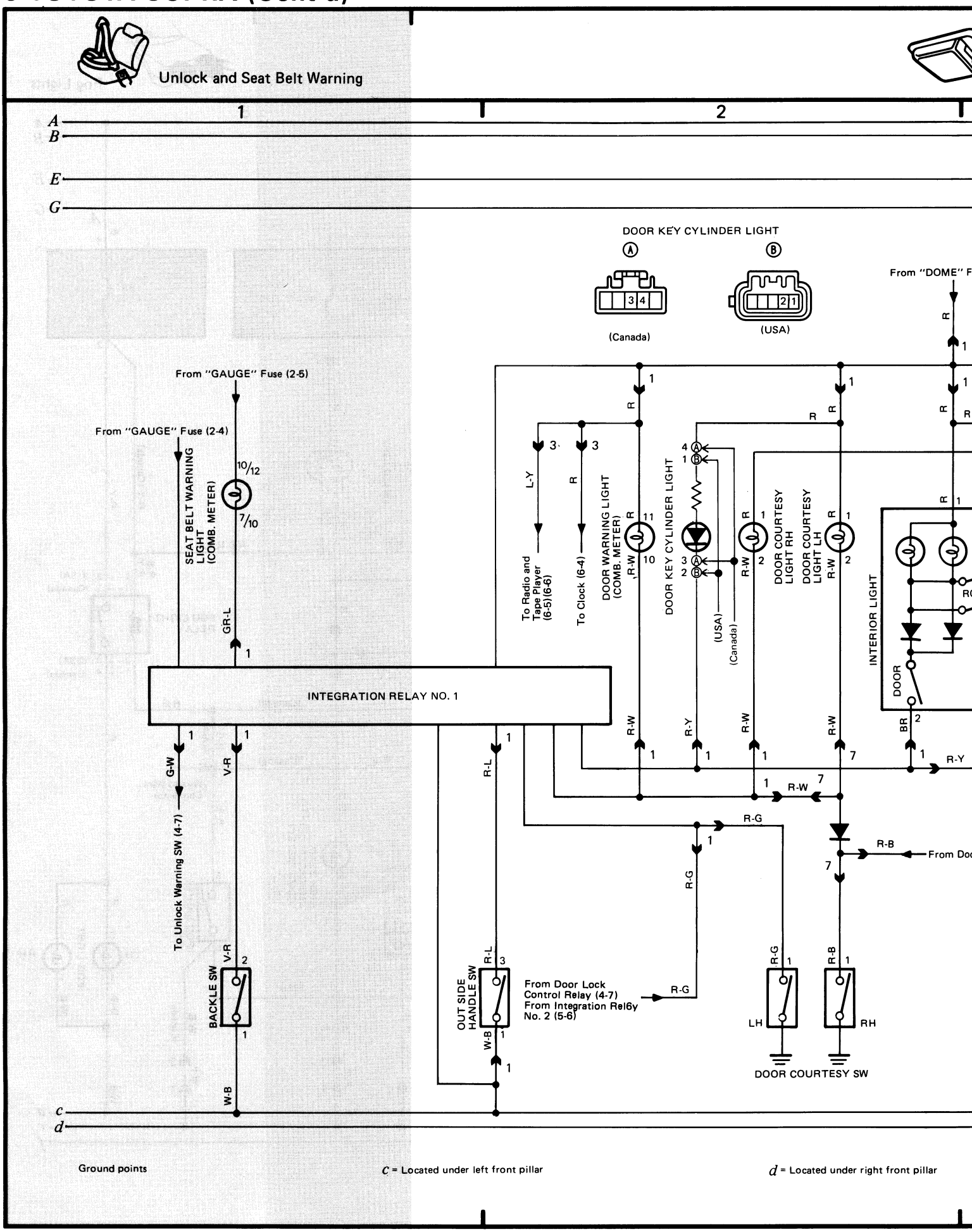
Unlock and Seat Belt Warning
DOOR KEY CYLINDER LIGHT
(Canada)
(USA)
From "DOME" F
From "GAUGE" Fuse (2-5)
From "GAUGE" Fuse (2-4)
SEAT BELT WARNING LIGHT (COMB. METER)
To Radio and Tape Player (6-5)(6-6)
To Clock (6-4)
DOOR WARNING LIGHT (COMB. METER)
DOOR KEY CYLINDER LIGHT
DOOR COURTESY LIGHT RH
DOOR COURTESY LIGHT LH
INTERIOR LIGHT
DOOR
INTEGRATION RELAY NO. 1
To Unlock Warning SW (4-7)
BACKLE SW
OUT SIDE HANDLE SW
From Door Lock Control Relay (4-7) From Integration Rel6y No. 2 (5-6)
From Doo
LH
RH
DOOR COURTESY SW
Ground points
c = Located under left front pillar
d = Located under right front pillar

Interior Lights

Clock

Cigarette Lighter

3

4

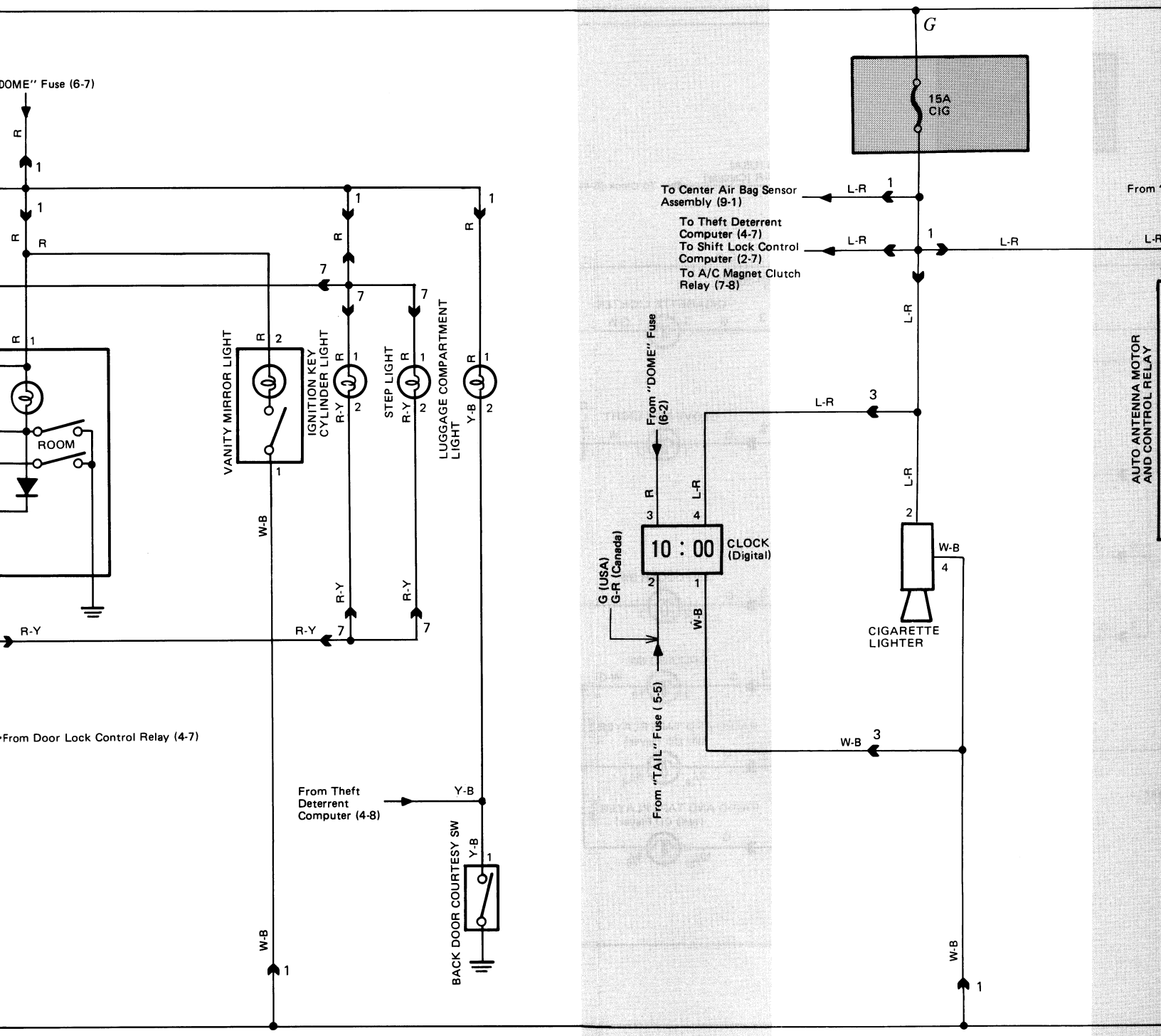

llar

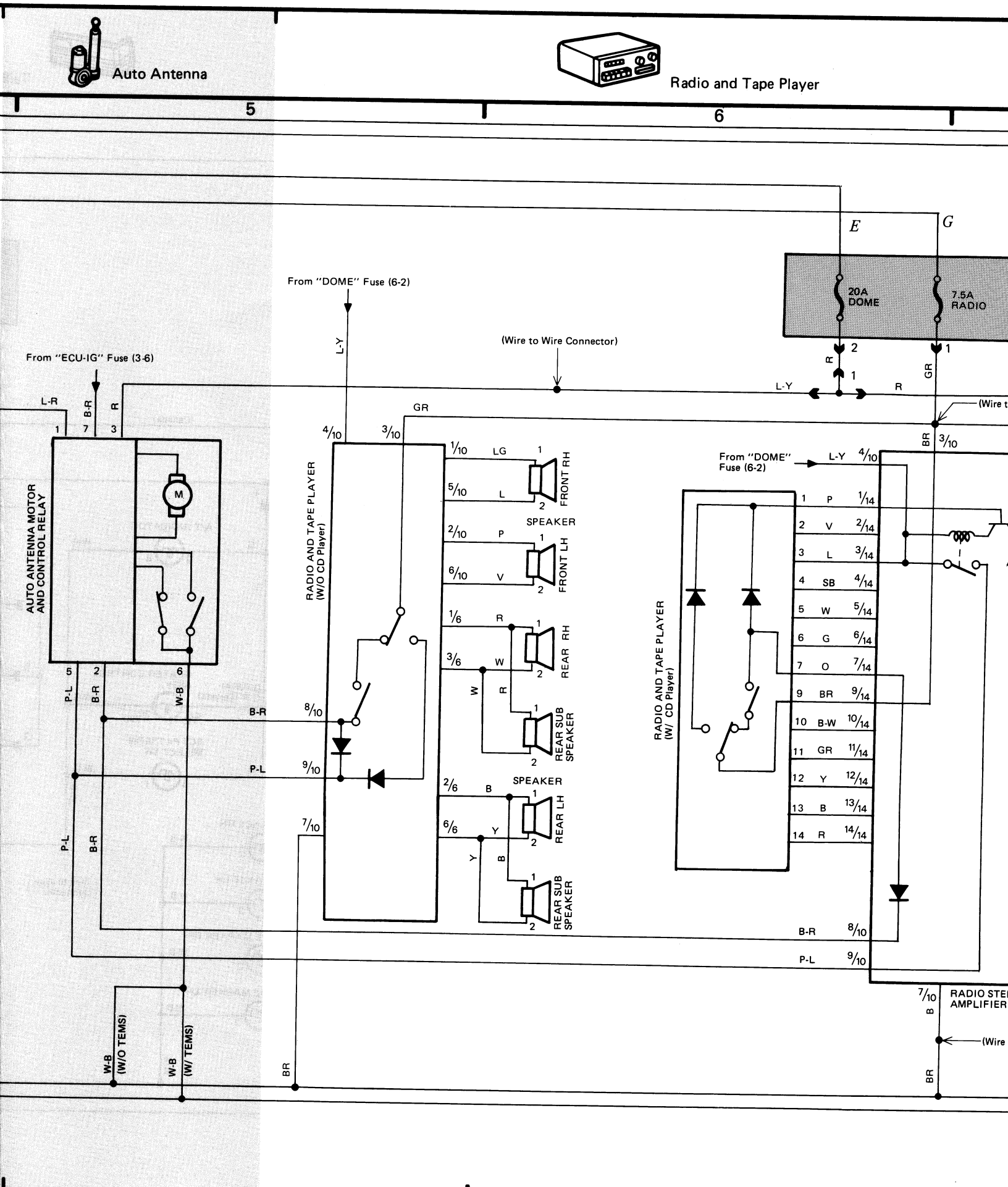

Auto Antenna
Radio and Tape Player
5
6
E
G
20A DOME
7.5A RADIO
From "DOME" Fuse (6-2)
(Wire to Wire Connector)
From "ECU-IG" Fuse (3-6)
AUTO ANTENNA MOTOR AND CONTROL RELAY
RADIO AND TAPE PLAYER (W/O CD Player)
RADIO AND TAPE PLAYER (W/ CD Player)
FRONT RH
SPEAKER
FRONT LH
REAR RH
REAR SUB SPEAKER
SPEAKER
REAR LH
REAR SUB SPEAKER
From "DOME" Fuse (6-2)
RADIO STE
AMPLIFIER
(Wire
W-B (W/O TEMS)
W-B (W/ TEMS)

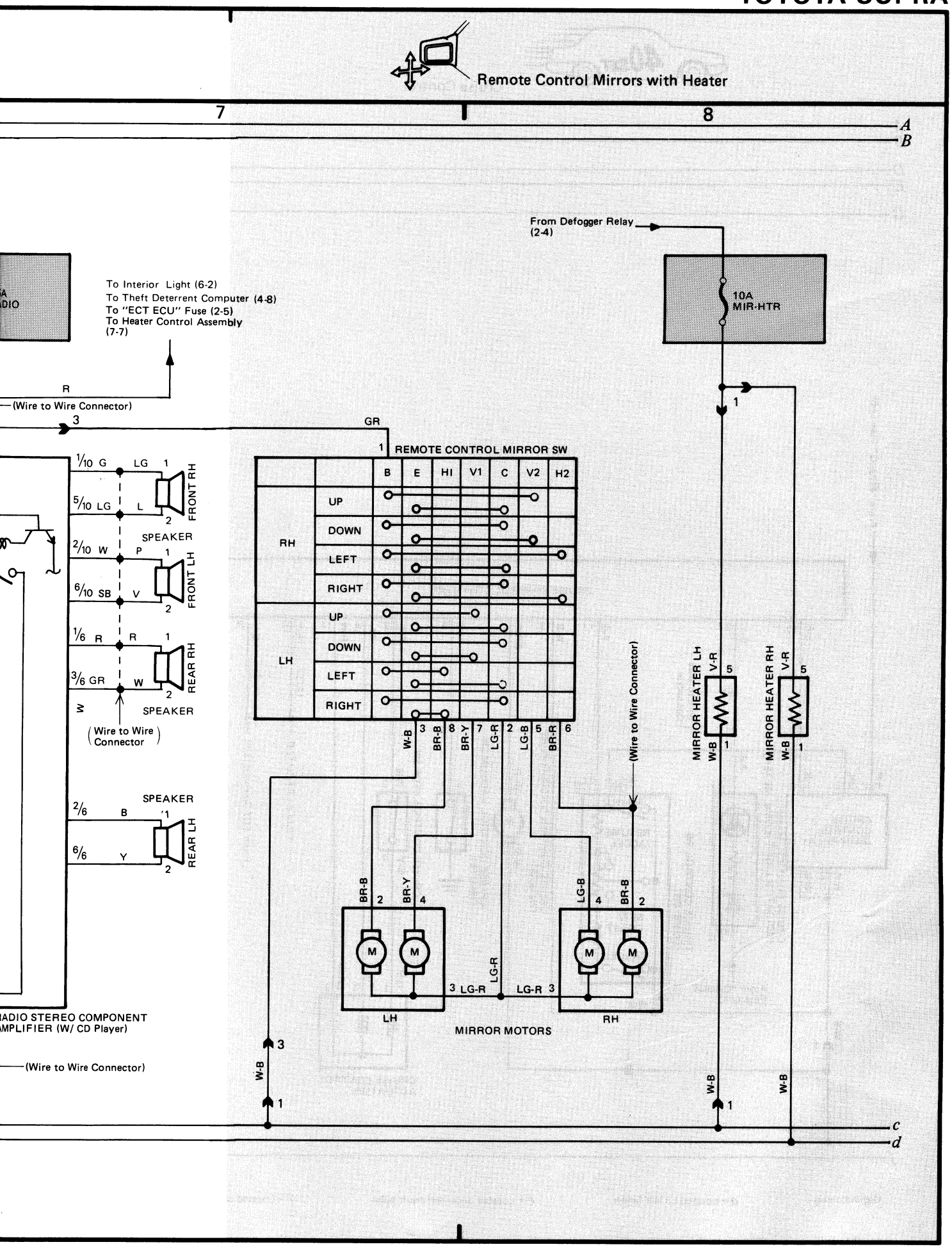
Remote Control Mirrors with Heater
7
8
A
B
From Defogger Relay (2-4)
10A MIR-HTR
To Interior Light (6-2)
To Theft Deterrent Computer (4-8)
To "ECT ECU" Fuse (2-5)
To Heater Control Assembly (7-7)
(Wire to Wire Connector)
GR
REMOTE CONTROL MIRROR SW
B E HI V1 C V2 H2
RH
UP
DOWN
LEFT
RIGHT
LH
UP
DOWN
LEFT
RIGHT
1/10 G LG 1
5/10 LG L 2
FRONT RH
SPEAKER
2/10 W P 1
6/10 SB V 2
FRONT LH
1/6 R R 1
3/6 GR W 2
REAR RH
SPEAKER
(Wire to Wire Connector)
2/6 B 1
6/6 Y 2
REAR LH
SPEAKER
W-B 3 BR-B 8 BR-Y 7 LG-R 2 LG-B 5 BR-R 6
(Wire to Wire Connector)
MIRROR HEATER LH
V-R 5
W-B 1
MIRROR HEATER RH
V-R 5
W-B 1
BR-B 2 BR-Y 4
LG-B 4 BR-B 2
M
3 LG-R
LG-R 3
LH
RH
MIRROR MOTORS
RADIO STEREO COMPONENT AMPLIFIER (W/ CD Player)
(Wire to Wire Connector)
W-B 3
W-B 1
W-B 1
W-B
c
d

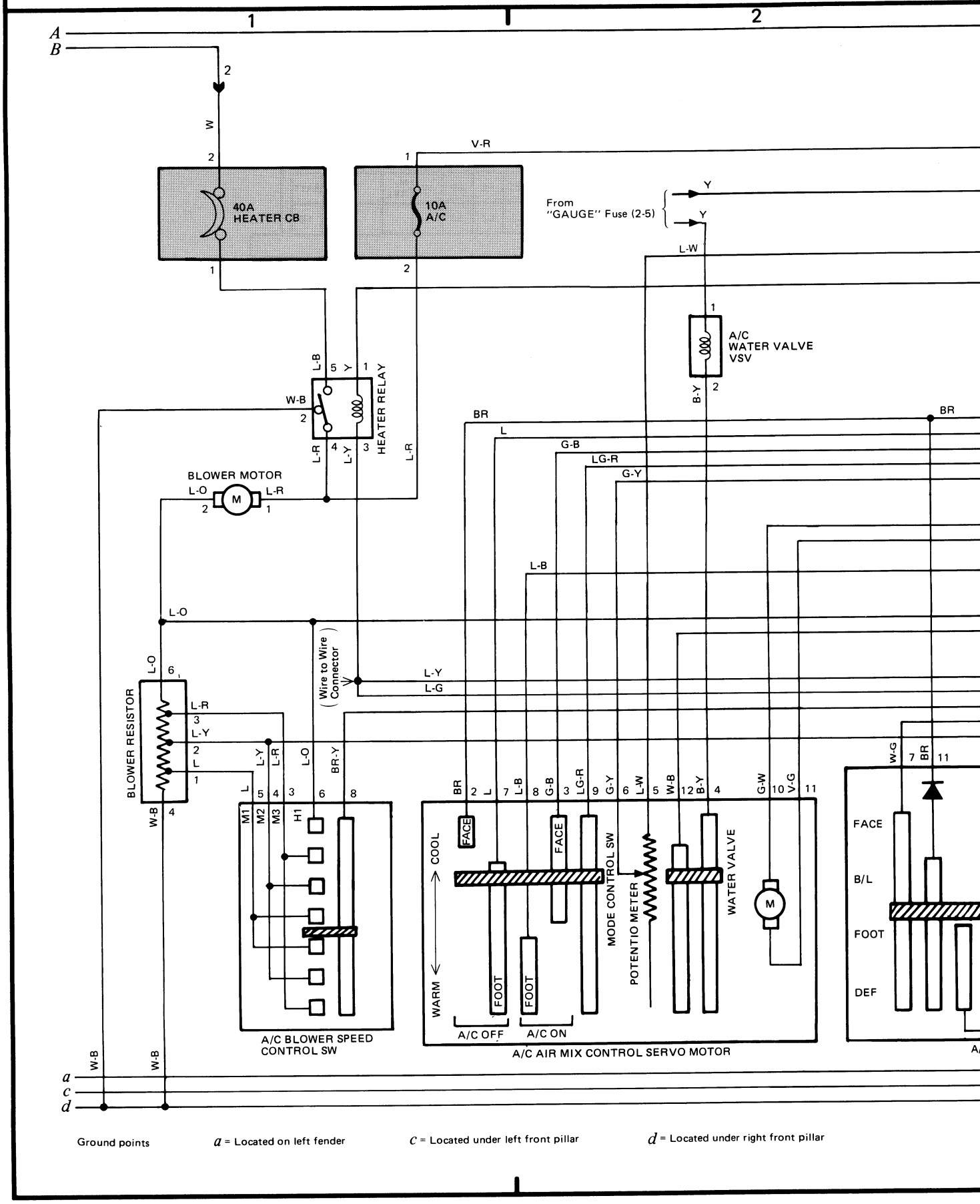

Ground points — *a* = Located on left fender — *c* = Located under left front pillar — *d* = Located under right front pillar

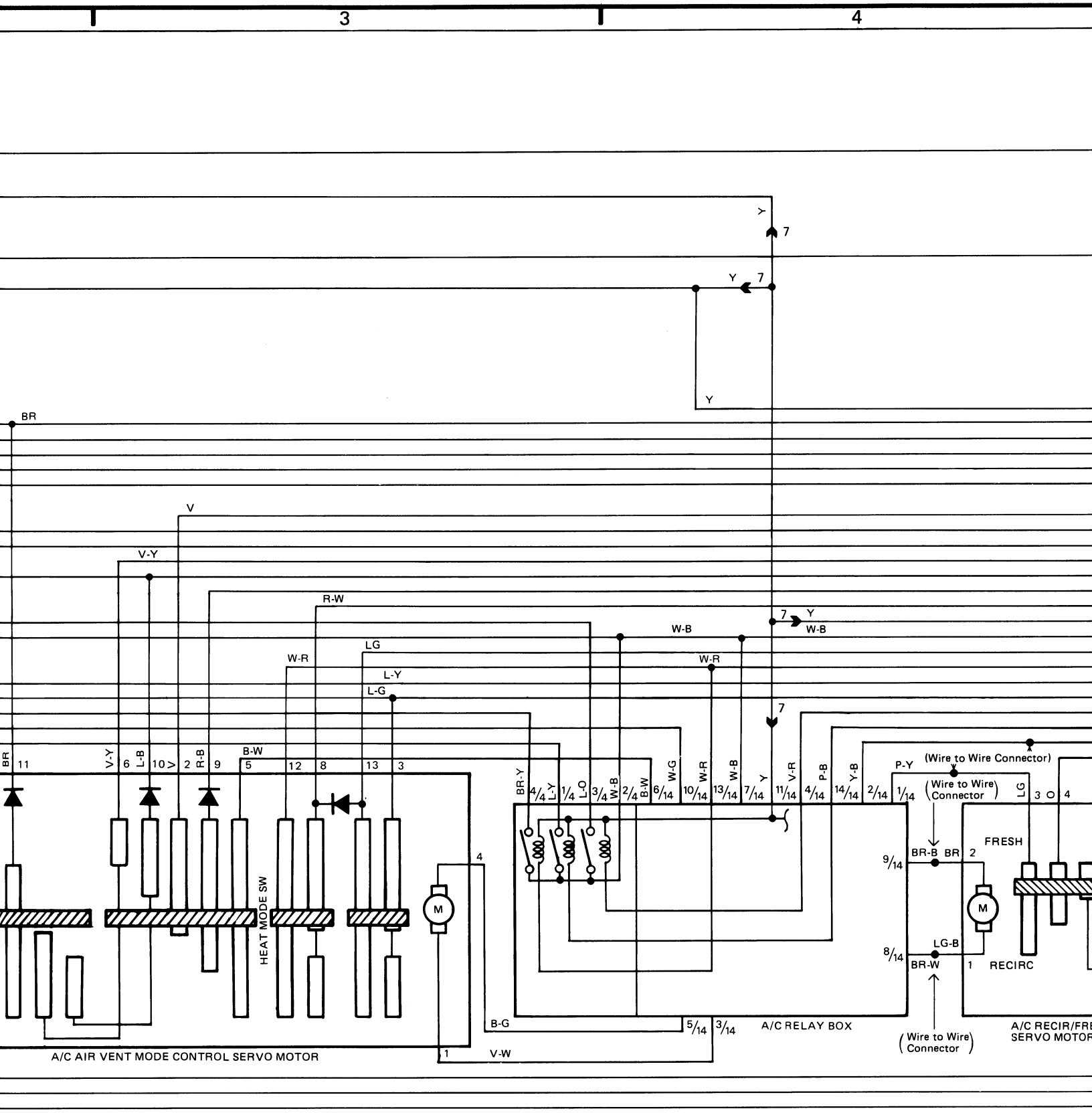
3
4
Y
7
Y
7
Y
BR
V
V-Y
R-W
7
Y
W-B
W-B
LG
W-R
W-R
L-Y
L-G
7
BR
11
V-Y
6
L-B
10
2
R-B
9
B-W
5
12
8
13
3
BR-Y
4/4
L-Y
1/4
L-O
3/4
W-B
2/4
B-W
6/14
W-G
10/14
W-R
13/14
W-B
7/14
Y
11/14
V-R
4/14
P-B
14/14
Y-B
2/14
1/14
P-Y
(Wire to Wire Connector)
(Wire to Wire Connector)
LG
3
O
4
FRESH
9/14
BR-B
BR
2
M
M
8/14
LG-B
BR-W
1
RECIRC
HEAT MODE SW
4
B-G
5/14
3/14
A/C RELAY BOX
(Wire to Wire Connector)
A/C RECIR/FRE
SERVO MOTOR
A/C AIR VENT MODE CONTROL SERVO MOTOR
1
V-W

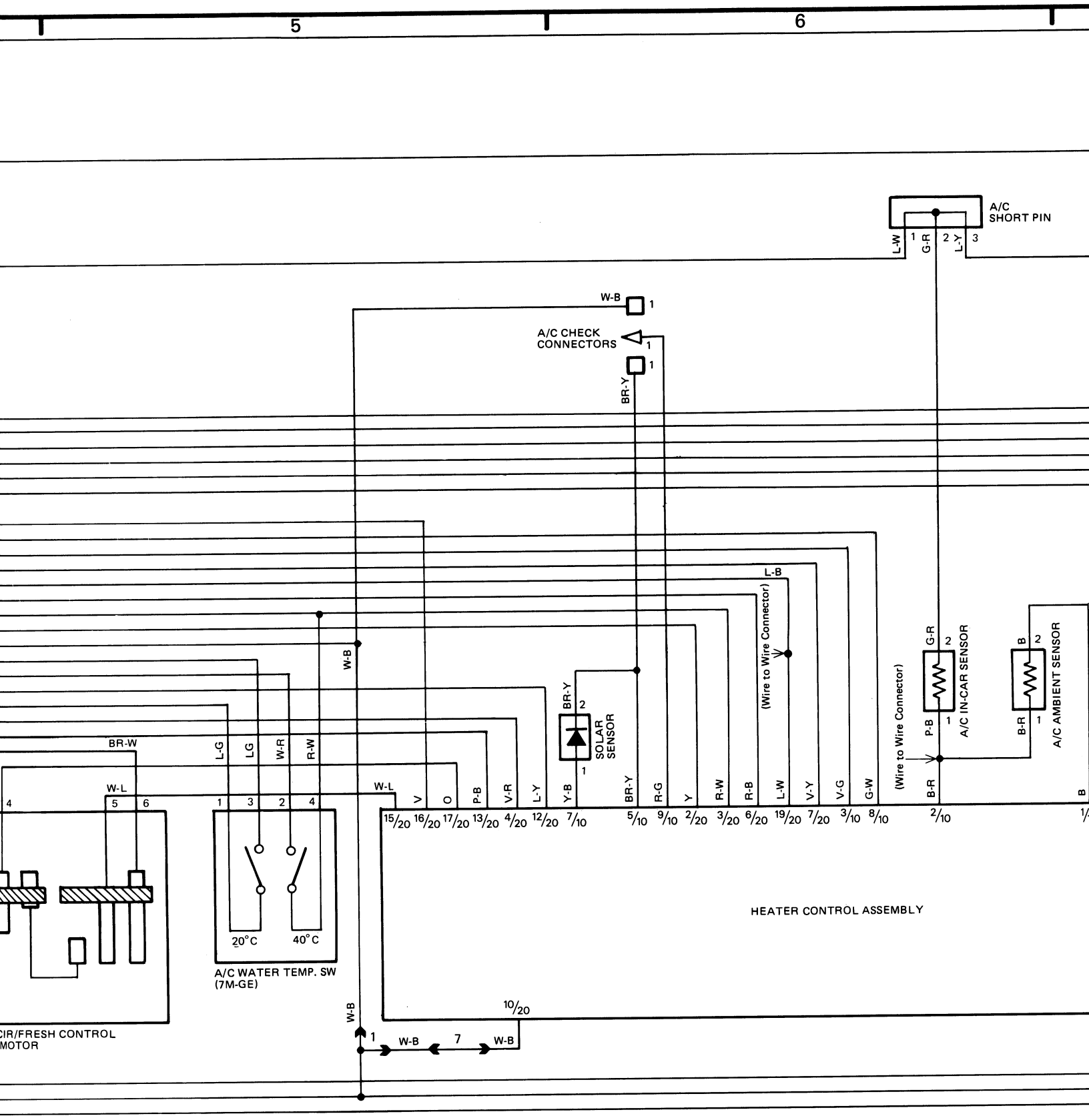
5
6
A/C SHORT PIN
L-W
G-R
L-Y
W-B
A/C CHECK CONNECTORS
BR-Y
L-B
(Wire to Wire Connector)
SOLAR SENSOR
A/C IN-CAR SENSOR
A/C AMBIENT SENSOR
P-B
B-R
BR-W
L-G
LG
W-R
R-W
W-L
V
O
P-B
V-R
L-Y
Y-B
BR-Y
R-G
Y
R-W
R-B
L-W
V-Y
V-G
G-W
15/20 16/20 17/20 13/20 4/20 12/20 7/10 5/10 9/10 2/20 3/20 6/20 19/20 7/20 3/10 8/10 2/10
HEATER CONTROL ASSEMBLY
20°C
40°C
A/C WATER TEMP. SW (7M-GE)
CIR/FRESH CONTROL MOTOR
10/20
7

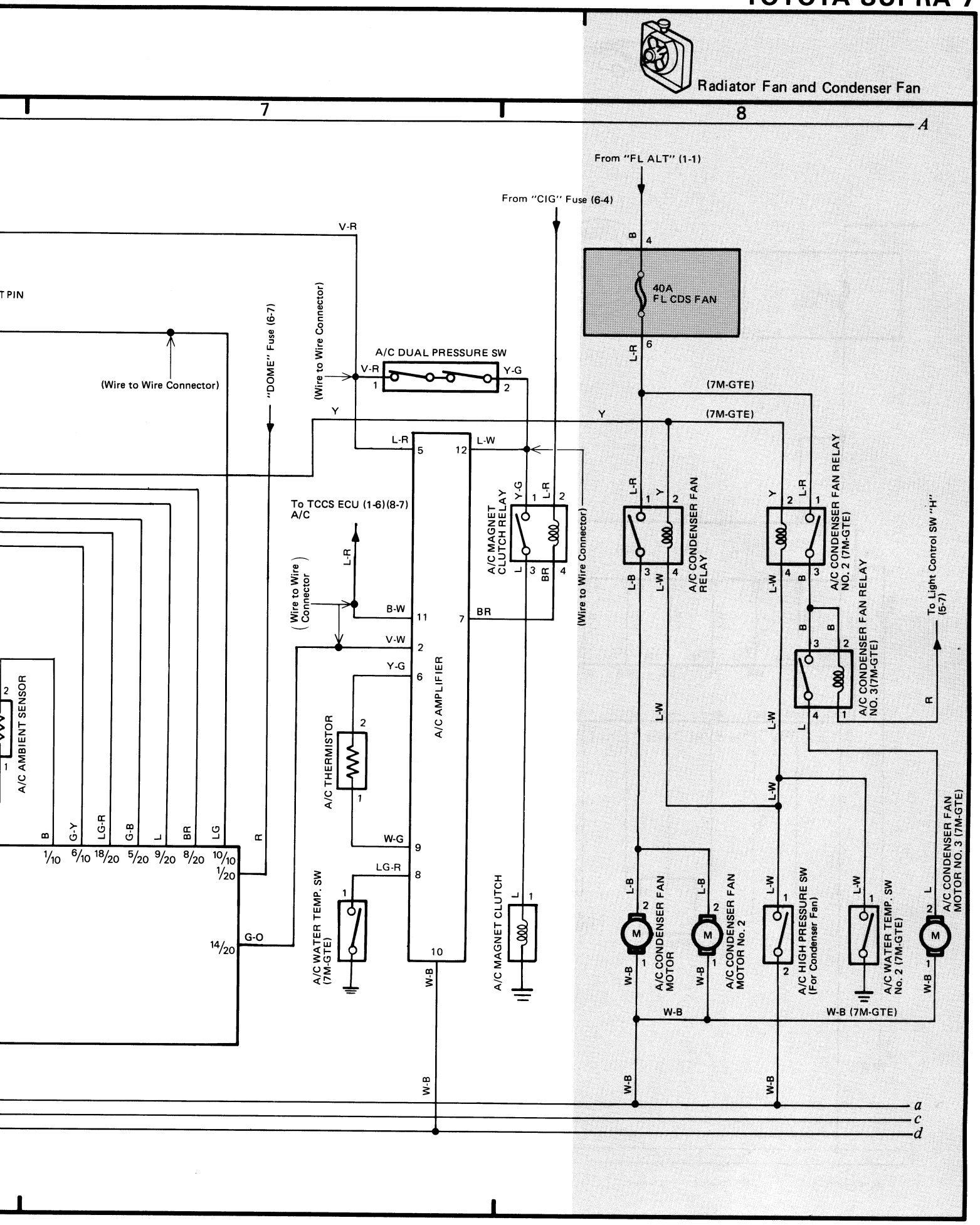
Radiator Fan and Condenser Fan
7
8
A
From "FL ALT" (1-1)
From "CIG" Fuse (6-4)
40A
FL CDS FAN
A/C DUAL PRESSURE SW
(Wire to Wire Connector)
"DOME" Fuse (6-7)
To TCCS ECU (1-6)(8-7)
A/C
A/C MAGNET CLUTCH RELAY
A/C CONDENSER FAN RELAY
A/C CONDENSER FAN RELAY NO. 2 (7M-GTE)
A/C CONDENSER FAN RELAY NO. 3(7M-GTE)
To Light Control SW "H" (5-7)
A/C AMPLIFIER
A/C AMBIENT SENSOR
A/C THERMISTOR
A/C WATER TEMP. SW (7M-GTE)
A/C MAGNET CLUTCH
A/C CONDENSER FAN MOTOR
A/C CONDENSER FAN MOTOR No. 2
A/C HIGH PRESSURE SW (For Condenser Fan)
A/C WATER TEMP. SW No. 2 (7M-GTE)
A/C CONDENSER FAN MOTOR NO. 3 (7M-GTE)
(7M-GTE)
W-B (7M-GTE)
a
c
d

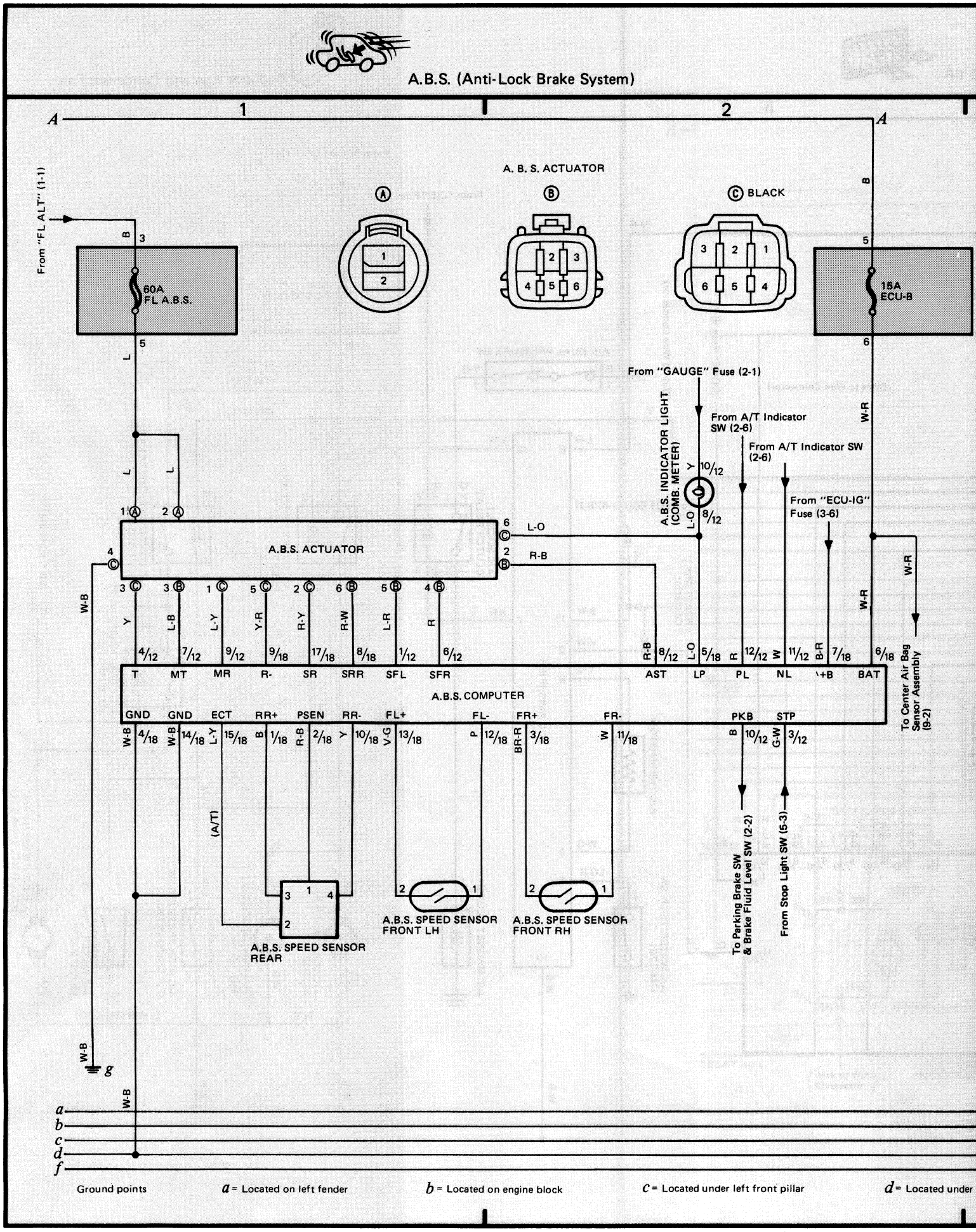
A.B.S. (Anti-Lock Brake System)
A. B. S. ACTUATOR
BLACK
From "FL ALT" (1-1)
60A
F.L A.B.S.
15A
ECU-B
From "GAUGE" Fuse (2-1)
From A/T Indicator SW (2-6)
From A/T Indicator SW (2-6)
From "ECU-IG" Fuse (3-6)
A.B.S. INDICATOR LIGHT (COMB. METER)
A.B.S. ACTUATOR
A.B.S. COMPUTER
T MT MR R- SR SRR SFL SFR AST LP PL NL +B BAT
GND GND ECT RR+ PSEN RR- FL+ FL- FR+ FR- PKB STP
To Center Air Bag Sensor Assembly (9-2)
(A/T)
A.B.S. SPEED SENSOR REAR
A.B.S. SPEED SENSOR FRONT LH
A.B.S. SPEED SENSOR FRONT RH
To Parking Brake SW & Brake Fluid Level SW (2-2)
From Stop Light SW (5-3)
Ground points
a = Located on left fender
b = Located on engine block
c = Located under left front pillar
d = Located under

Power Source (7M-GTE)

Starting (7M-GTE)

3

4

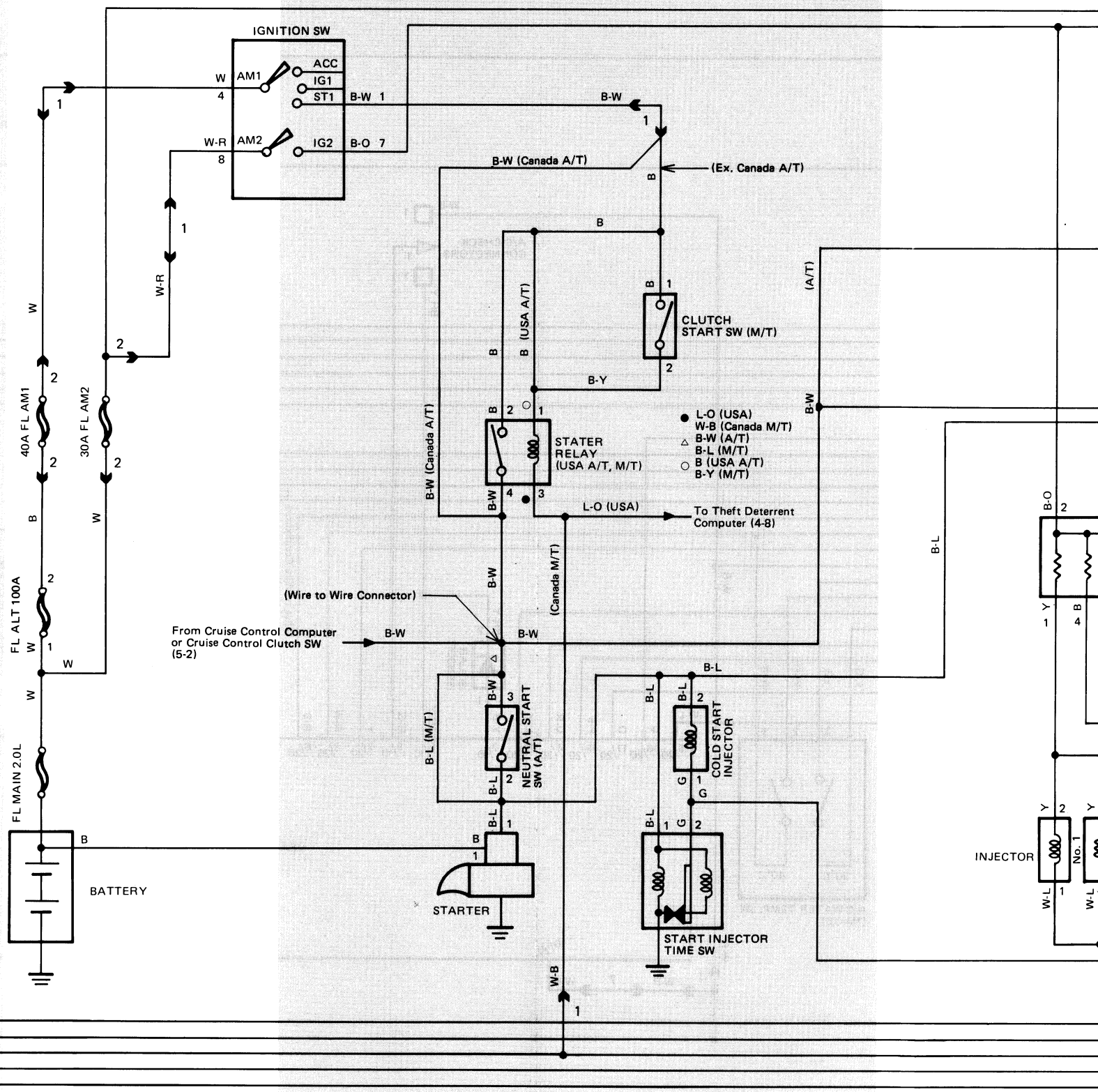

d under right front pillar

f = Located on back panel

g = Locared on right fender

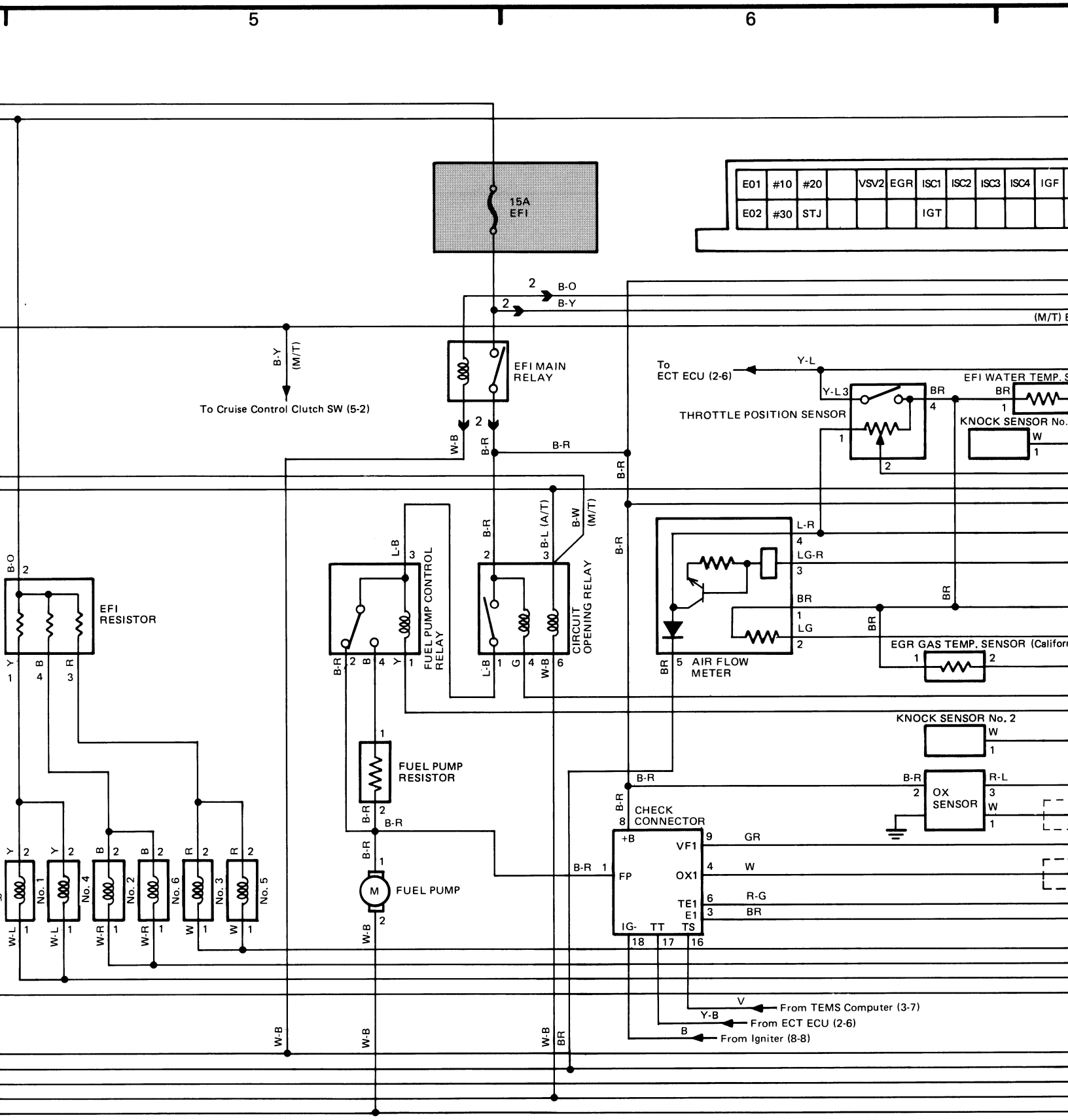
5
6
15A
EFI
E01
#10
#20
VSV2
EGR
ISC1
ISC2
ISC3
ISC4
IGF
E02
#30
STJ
IGT
B-O
B-Y
(M/T)
To Cruise Control Clutch SW (5-2)
EFI MAIN RELAY
W-B
B-R
To ECT ECU (2-6)
Y-L
EFI WATER TEMP. S
THROTTLE POSITION SENSOR
KNOCK SENSOR No.
EFI RESISTOR
FUEL PUMP CONTROL RELAY
CIRCUIT OPENING RELAY
B-L (A/T)
B-W (M/T)
L-R
LG-R
BR
LG
AIR FLOW METER
EGR GAS TEMP. SENSOR (Califor
KNOCK SENSOR No. 2
FUEL PUMP RESISTOR
FUEL PUMP
OX SENSOR
R-L
CHECK CONNECTOR
+B
VF1
FP
OX1
TE1
E1
IG-
TT
TS
GR
W
R-G
From TEMS Computer (3-7)
From ECT ECU (2-6)
From Igniter (8-8)
No. 1
No. 4
No. 2
No. 6
No. 3
No. 5

rol (7M-GTE)

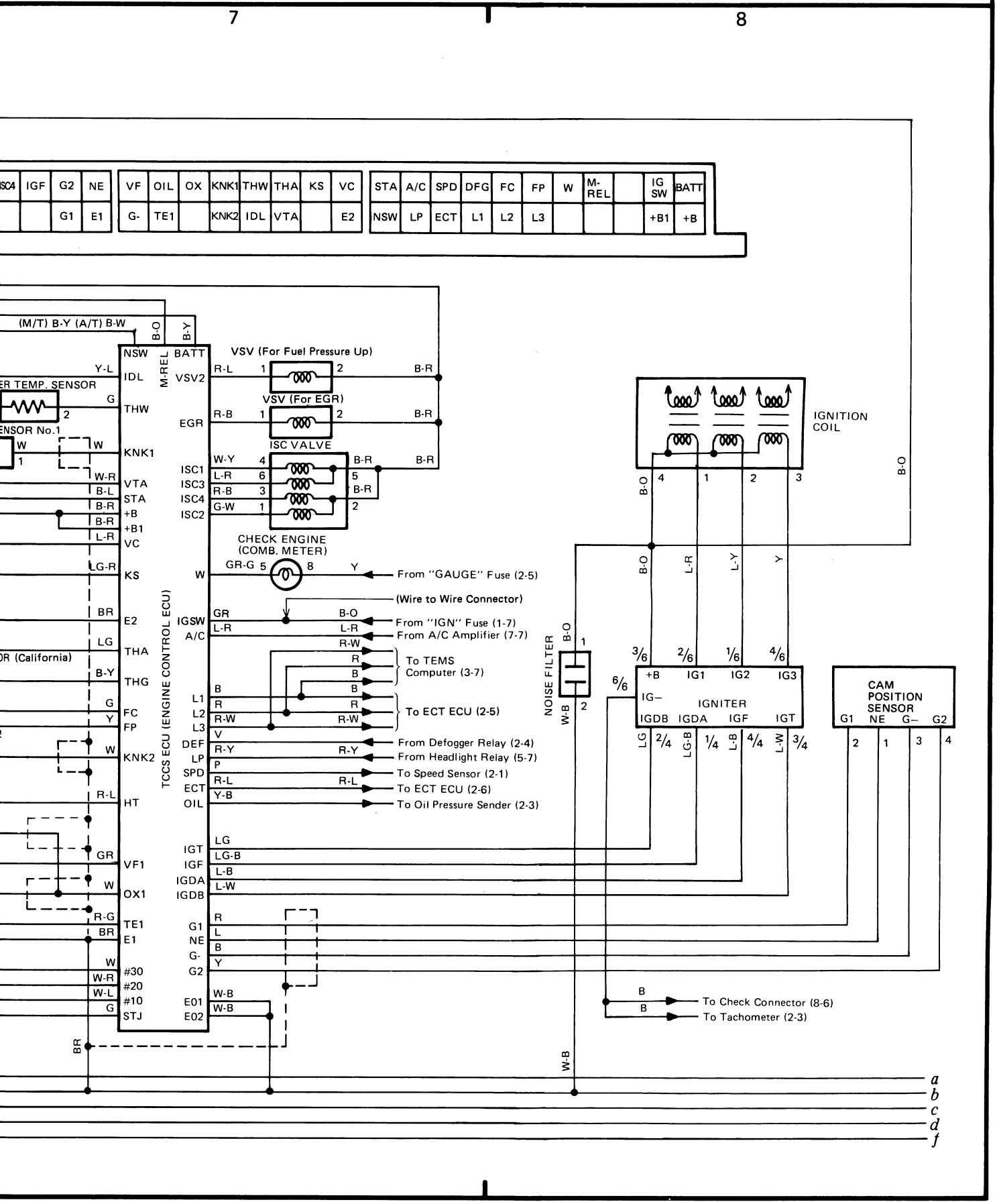
7
8
ISC4 IGF G2 NE
G1 E1
VF OIL OX KNK1 THW THA KS VC
G- TE1 KNK2 IDL VTA E2
STA A/C SPD DFG FC FP W M-REL IG SW BATT
NSW LP ECT L1 L2 L3 +B1 +B
(M/T) B-Y (A/T) B-W
B-O
B-Y
NSW
IDL
THW
KNK1
VTA
STA
+B
+B1
VC
KS
E2
THA
THG
FC
FP
KNK2
HT
VF1
OX1
TE1
E1
#30
#20
#10
STJ
M-REL
BATT
VSV2
EGR
ISC1
ISC3
ISC4
ISC2
IGSW
A/C
L1
L2
L3
DEF
LP
SPD
ECT
OIL
IGT
IGF
IGDA
IGDB
G1
NE
G-
G2
E01
E02
TCCS ECU (ENGINE CONTROL ECU)
VSV (For Fuel Pressure Up)
VSV (For EGR)
ISC VALVE
CHECK ENGINE
(COMB. METER)
From "GAUGE" Fuse (2-5)
(Wire to Wire Connector)
From "IGN" Fuse (1-7)
From A/C Amplifier (7-7)
To TEMS
Computer (3-7)
To ECT ECU (2-5)
From Defogger Relay (2-4)
From Headlight Relay (5-7)
To Speed Sensor (2-1)
To ECT ECU (2-6)
To Oil Pressure Sender (2-3)
IGNITION
COIL
NOISE FILTER
IGNITER
+B IG1 IG2 IG3
IG–
IGDB IGDA IGF IGT
CAM
POSITION
SENSOR
G1 NE G– G2
To Check Connector (8-6)
To Tachometer (2-3)
a
b
c
d
f

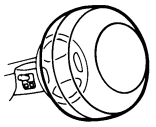

SRS Airbag

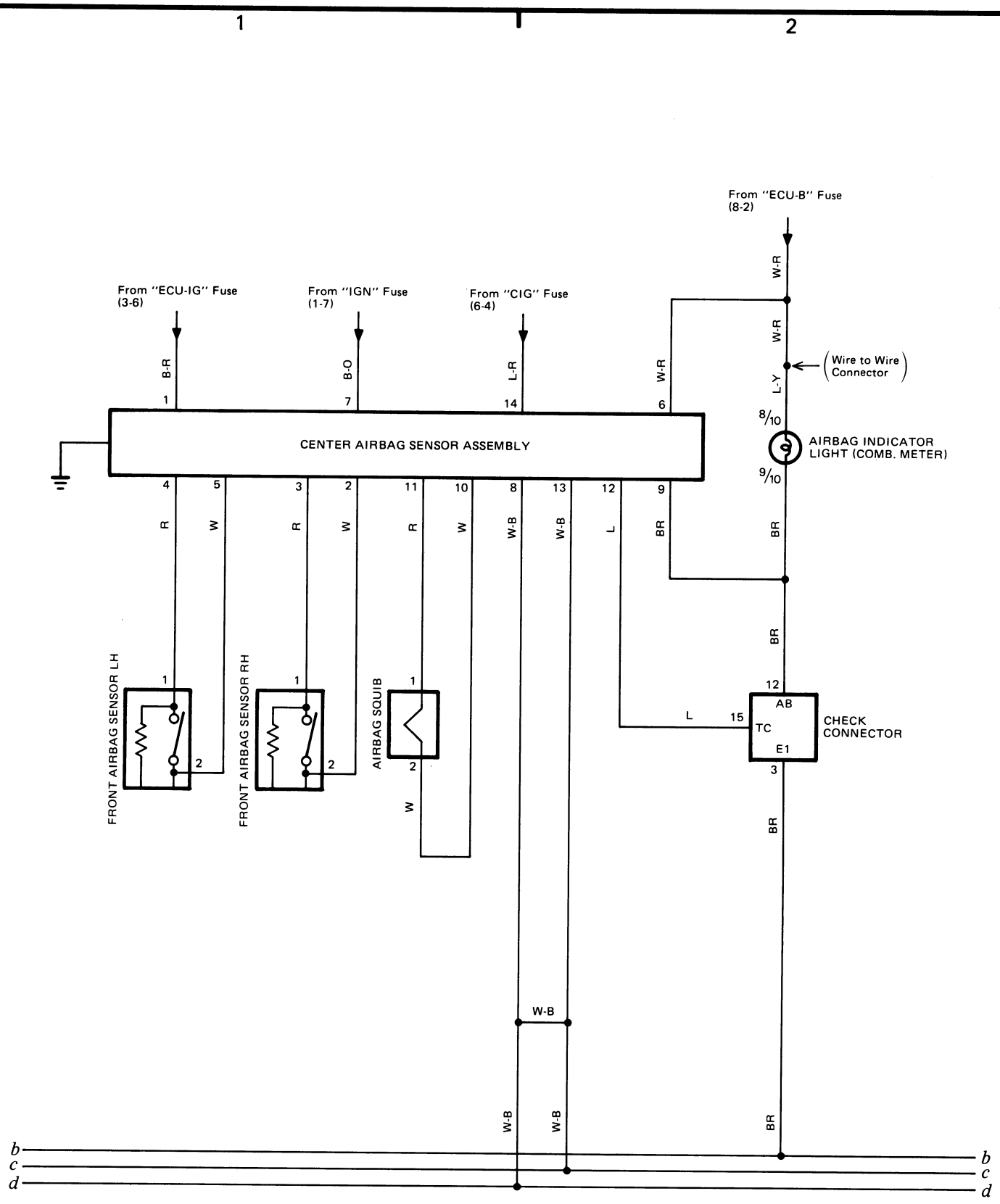

b = Located on engine block *c* = Located under left front pillar *d* = Located under right front pillar